FORM NO. 01-505-0980 Rev. G

TORO®

MODEL NO. 44501 - 30381 & UP

PARTS CATALOG

TOPDRESSER 2300

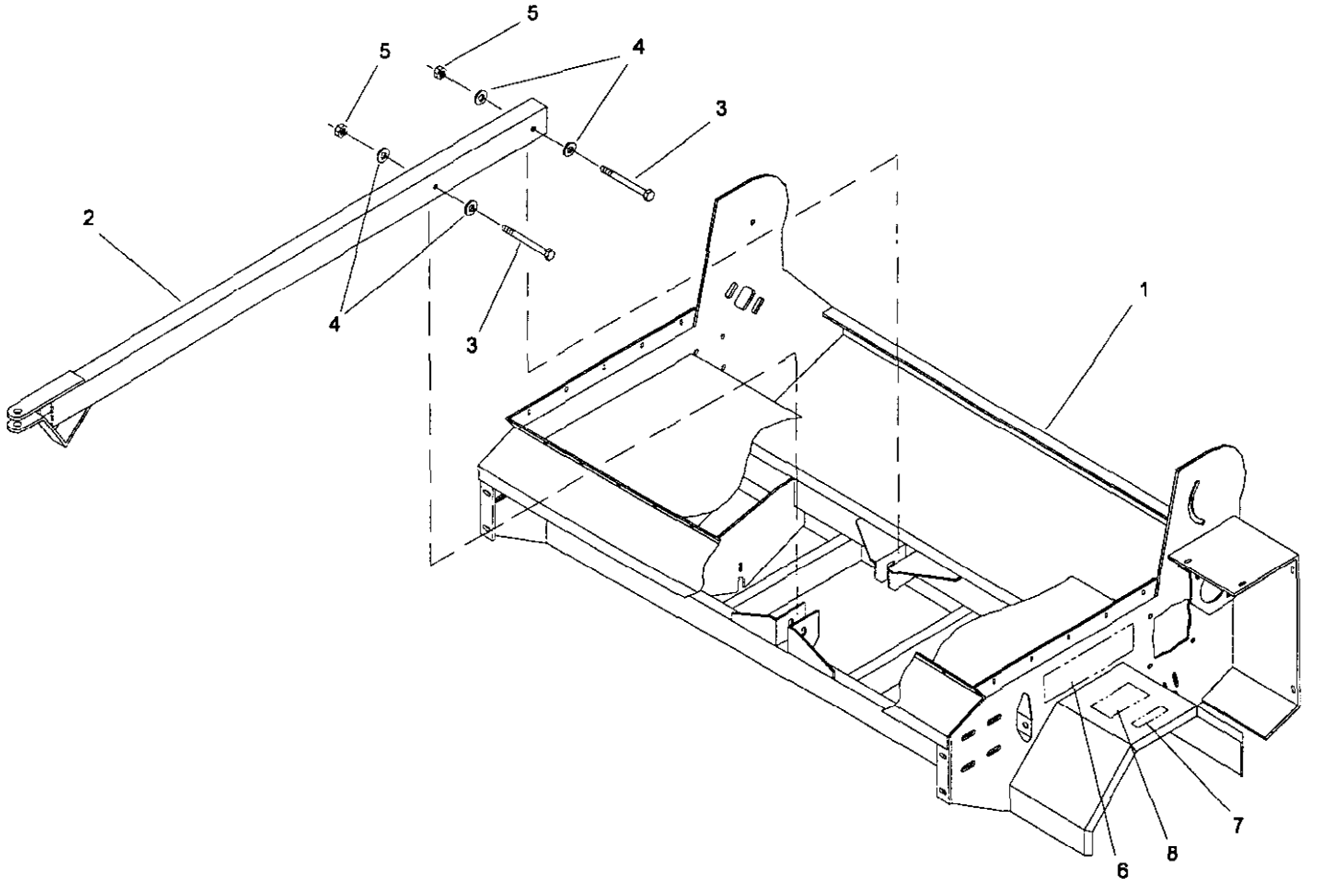

TONGUE ASSEMBLY

23-001F

Ref. No.	Part No.	Description	No. Used
1	23-005-0103	Main Frame	1
2	23-005-0161	Hitch	1
3	325-14	Capscrew - Hex Hd.	2
4	3256-6	Flat Washer	4
5	3296-23	Nut - ESNA Lock	2
6	01-506-0690	Decal - Topdresser 2300	2
7	75-5190	Decal - No Riders	2
8	01-506-0240	Decal - Warning	2

© The TORO Company - 1996
All Rights Reserved

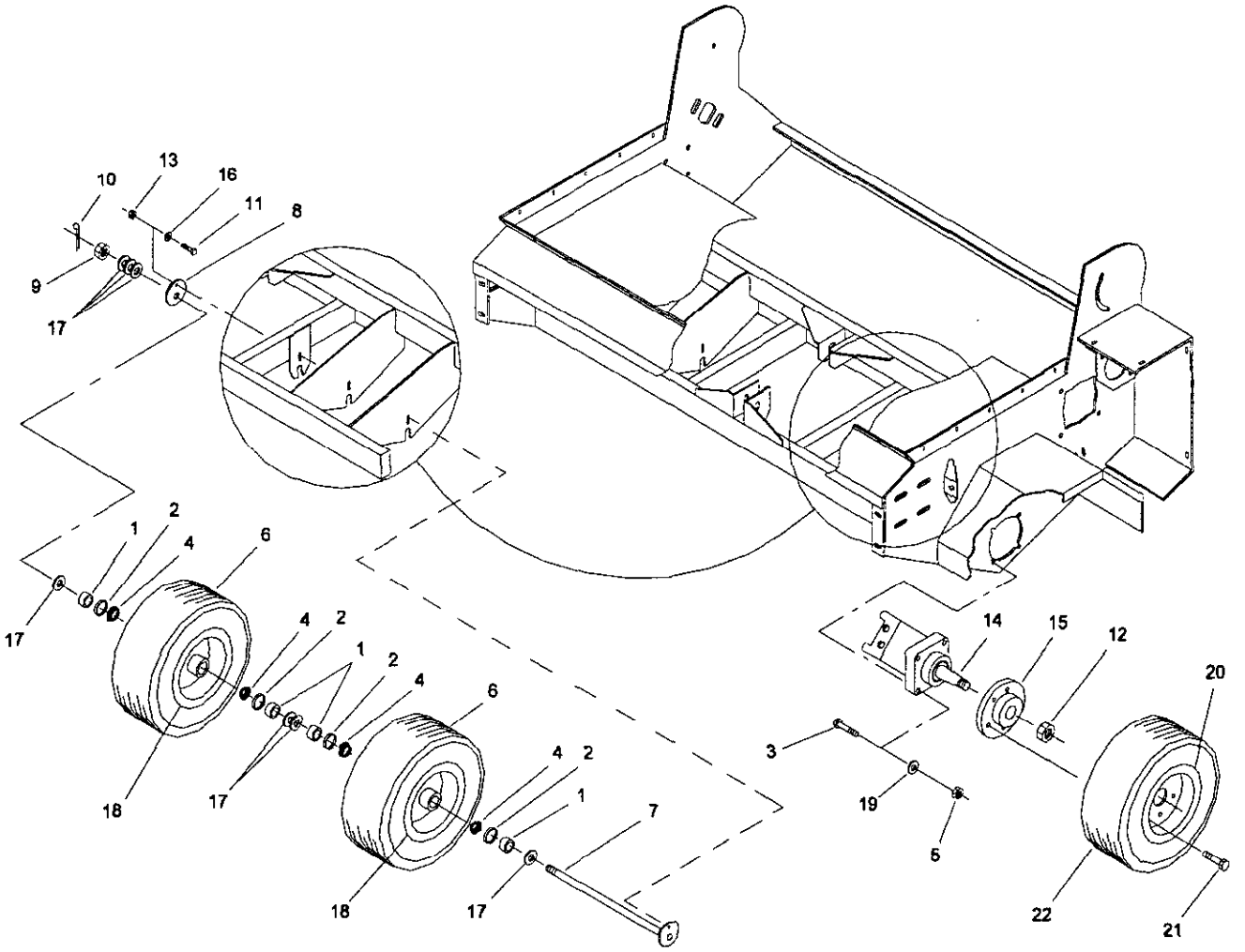

WHEEL ASSEMBLY

23-002F

Ref. No.	Part No.	Description	No. Used
1	01-269-0060	Axle Spacer	8
2	01-405-0460	Seal	8
3	325-10	Capscrew - Hex Hd.	8
4	254-78	Bearing Cone	8
5	3296-23	Nut - ESNA Lock	8
6	01-269-0350	Tire	4
7	23-005-0151	Axle	2
8	23-004-0241	Axle Bracket	2
9	01-190-1210	Slotted Nut	2
10	3272-15	Cotter Pin	2
11	323-6	Capscrew - Hex Hd.	2
12	01-304-1240	Pack Nut	2

Ref. No.	Part No.	Description	No. Used
13	3296-39	Nut - ESNA Lock	2
14	01-304-0990	Hydraulic Motor (Incl. Ref. #25)	2
*	01-304-1000	Seal Kit	1
15	01-269-2540	Hub	2
16	3256-4	Flat Washer	2
17	01-168-1210	Machinery Bushing	14
18	01-269-0360	Wheel	4
*	01-215-0100	Grease Fitting (for Ref. #24)	4
19	3256-26	"SAE" Flat Washer	8
20	01-269-1020	Wheel	2
21	01-158-2040	Lug Bolt	10
22	01-269-0320	Tire	2

* Not Illustrated

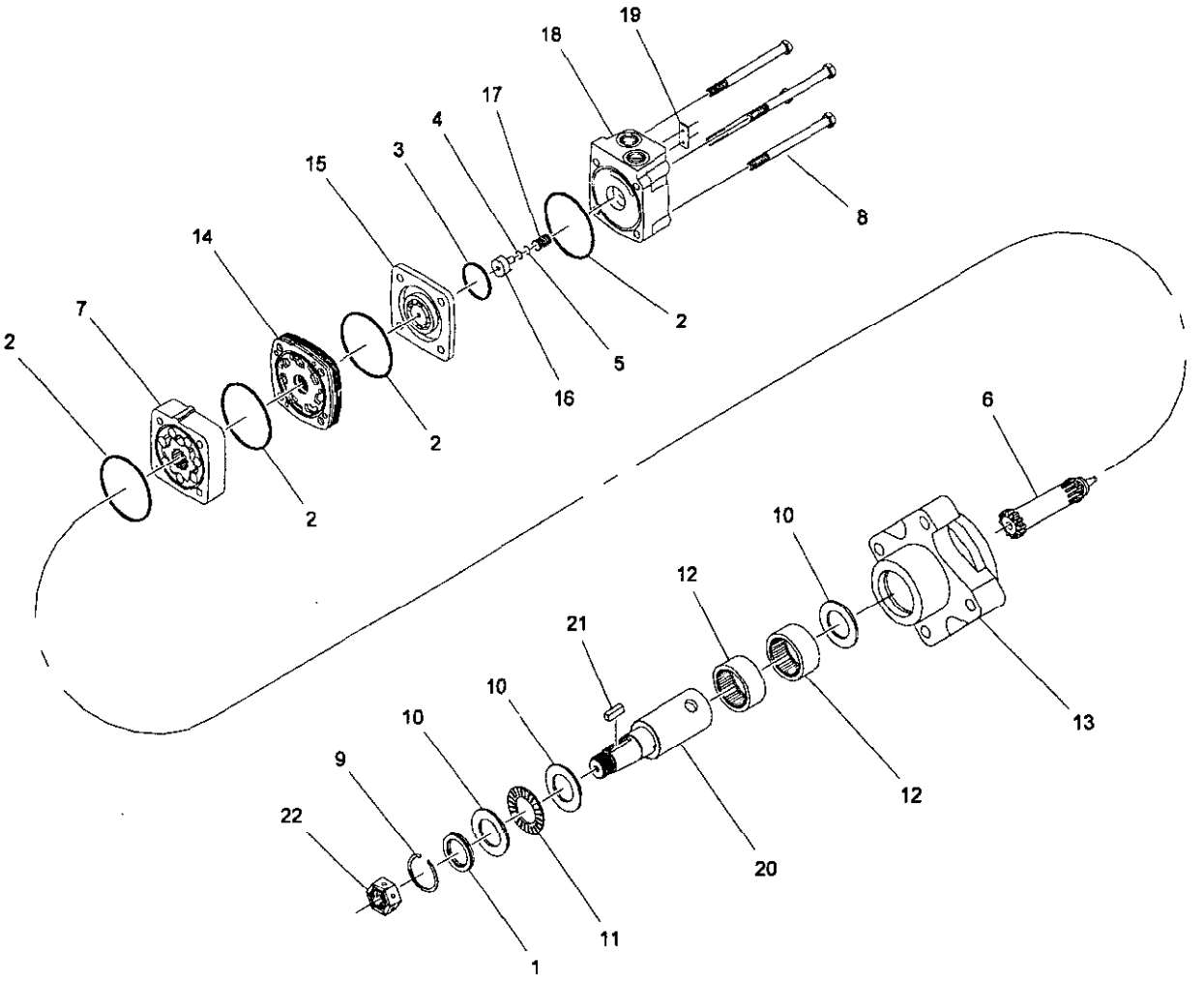

HYDRAULIC MOTOR - NO. 01-304-0990

HYDM0990

Ref. No.	Part No.	Description	No. Used
1		Shaft Seal	1
2		Body Seal	4
3		Commutator	1
4		Teflon Backup Seal	1
5		O-Ring Seal	1
*	01-304-1000	Seal Kit (Incl. #1 - 5)	1
6	01-304-1150	Drive Link	1
7	01-304-1160	Rotor Set	1
8	01-304-1170	Bolt Set (4)	1
9	01-304-1040	Snap Ring	1
10	01-304-1050	Thrust Washer	3
11	01-304-1060	Thrust Bearing	1
12	01-304-1070	Needle Bearing	2
13		Housing	1

Ref. No.	Part No.	Description	No. Used
*	01-304-1080	Housing Bearing Kit (Incl. #10,12,13)	1
14	01-304-1090	Manifold	1
15	01-304-1100	Commutator Assembly	1
16	01-304-1110	Endcover Piston	1
17	01-304-1120	Piston Spring	1
18		Endcover	1
*	01-304-1130	Endcover Kit (Incl. #2,4,5,16,17,18)	1
19		I.D. Tag Assembly	1
20		Shaft	1
21		Shaft Key	1
22	01-304-1240	Pack Nut	1
*	01-304-1180	Shaft Kit (Incl. #20 - 22)	1

* Not Illustrated

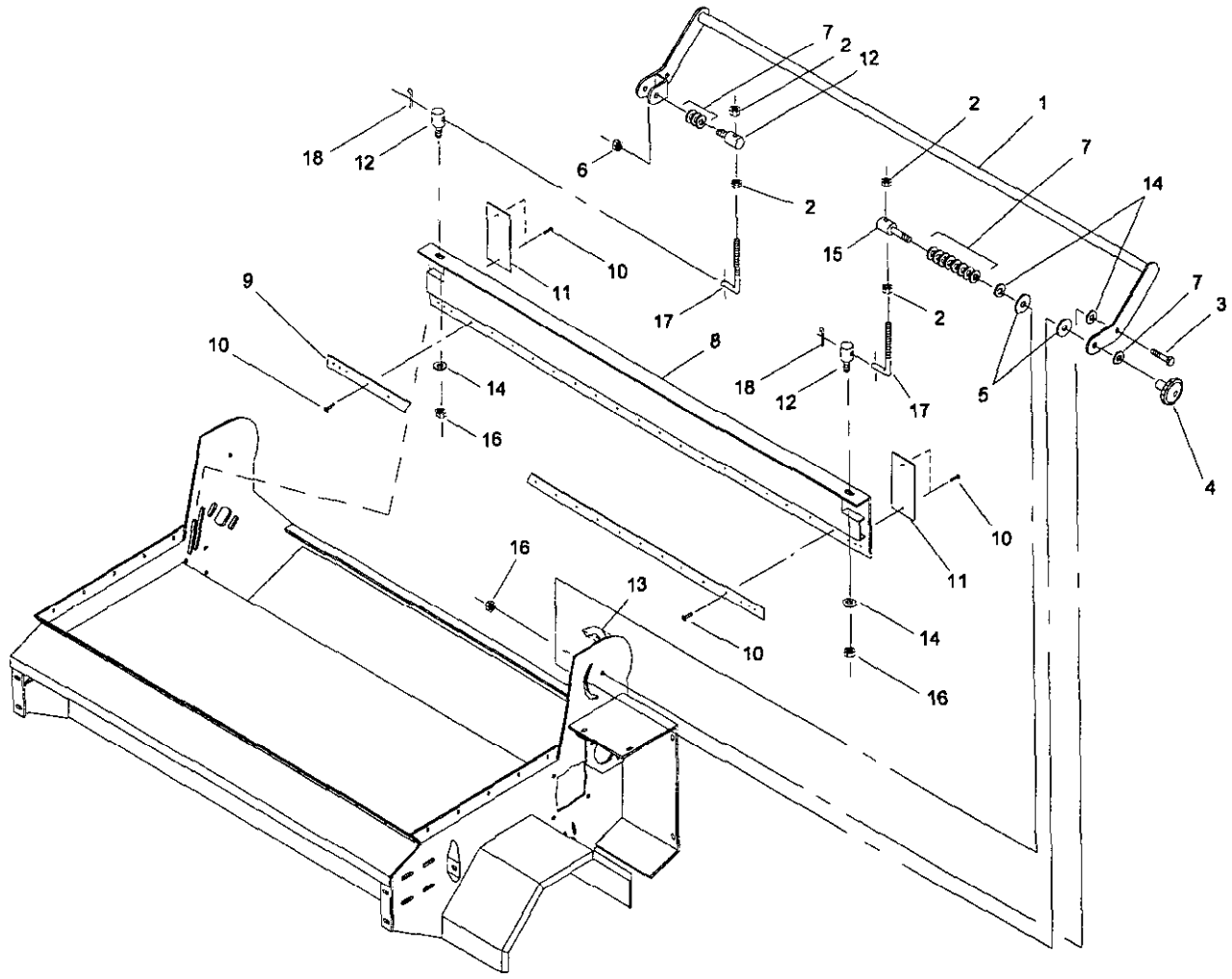

GATE CONTROL ASSEMBLY

23-003F

Ref. No.	Part No.	Description	No. Used
1	23-005-0141	Gate Control Arm	1
2	3218-5	Jam Nut	4
3	325-5	Capscrew - Hex Hd.	2
4	01-256-0200	Knob	1
5	23-004-0721	Plastic Washer	2
6	32153-5	Nut - Side Lock	1
7	3256-26	"SAE" Flat Washer	11(var)
8	23-005-1111	Gate	1
9	23-004-0221	Gate Seal	1

Ref. No.	Part No.	Description	No. Used
10	3269-20	Pop Rivet	26
11	23-004-1041	Slide	2
12	56-104-0301	Adjustment Lug-short	3
13	01-506-0210	Decal - Height Adjustment	1
14	3256-6	Flat Washer	5
15	23-004-1061	Adjustment Lug-long	1
16	3296-23	Nut - ESNA Lock	4
17	23-004-1021	Gate Rod	2
18	3272-11	Cotter Pin	2

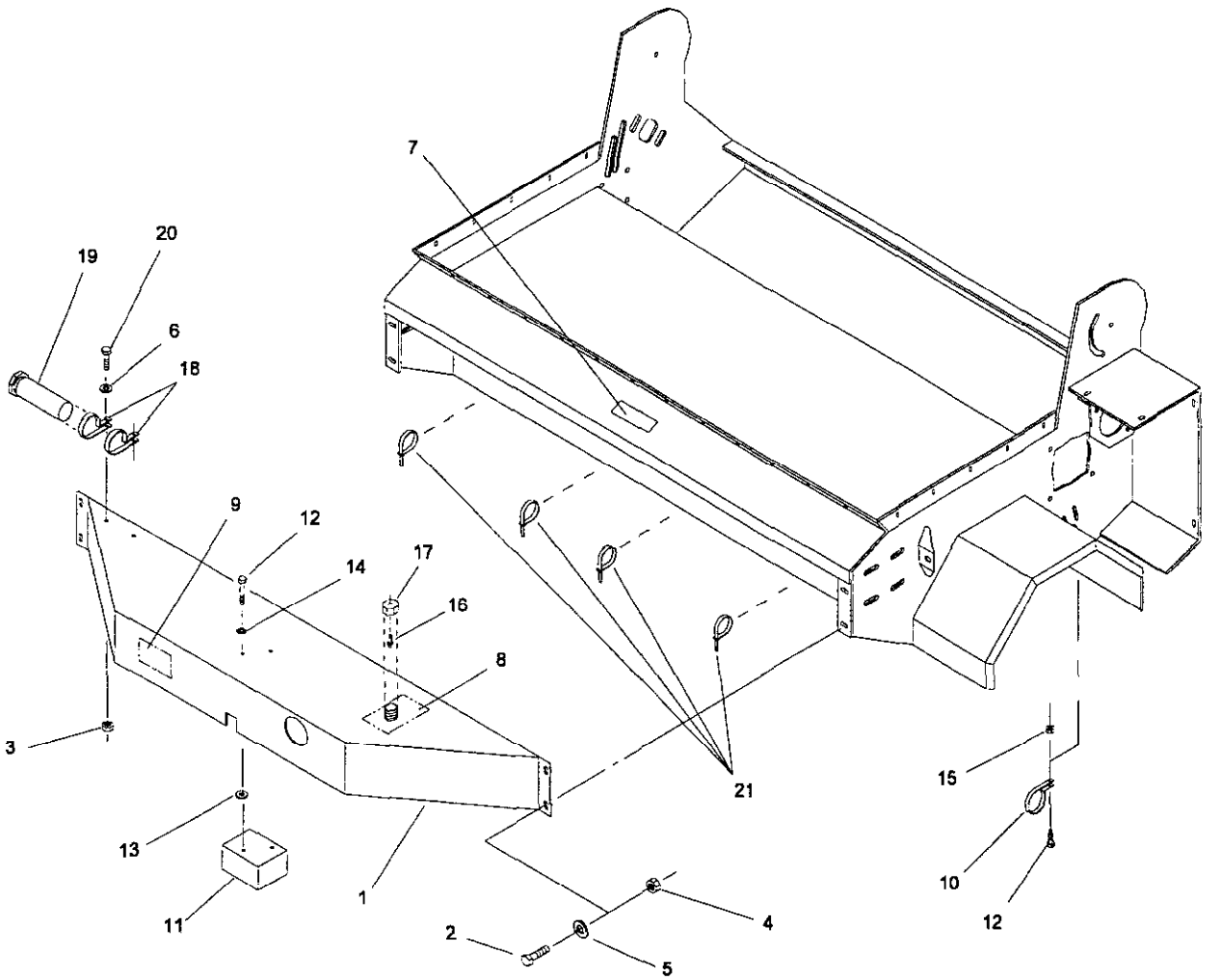

HYDRAULIC TANK ASSEMBLY

23-004F

Ref. No.	Part No.	Description	No. Used
1	23-005-0171	Hydraulic Tank	1
2	323-6	Capscrew - Hex Hd.	4
3	3296-42	Nut - ESNA Lock	2
4	3290-357	Nut - Whiz Lock Flg	4
5	3256-4	Flat Washer	4
6	3256-2	Flat Washer	2
7	75-5190	Decal - No Riders	1
8	01-506-0250	Decal - Danger	1
9	62-7400	Decal - Toro	1
10	2412-74	R-Clamp	1
11	01-308-1590	Hydraulic Valve	1
12	322-5	Capscrew - Hex Hd.	3

Ref. No.	Part No.	Description	No. Used
13	3256-3	Flat Washer	2
14	3253-4	Lock Washer	2
15	3296-29	Nut - ESNA Lock	1
16	01-269-1530	Valve Stem	1
17	02-201-2170	Cap	1
*	23-002-0021	Pressure Cap Assembly (Incl. Ref. #16, 17)	1
18	2412-133	R-Clamp	2
19	74-0720	Manual Tube	1
20	321-6	Capscrew - Hex Hd.	2
21	3334-945	Cable Tie	4

* Not Illustrated

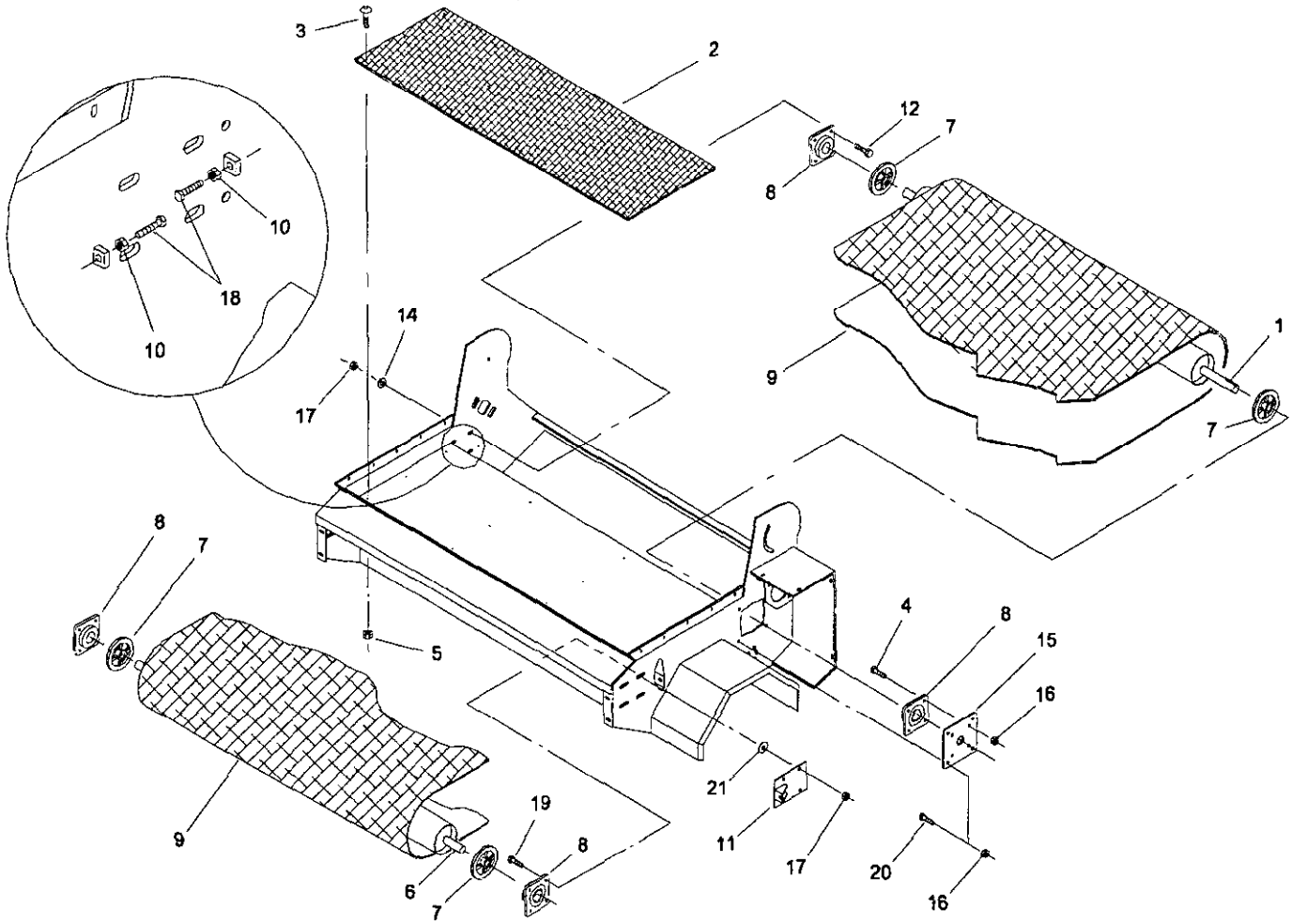

ROLLER ASSEMBLY

23-005F

Ref. No.	Part No.	Description	No. Used
1	23-005-0121	Drive Roller	1
2	23-004-0271	Conveyor Top	1
3	32122-28	Truss Head Machine Screw	12
4	325-5	Capscrew - Hex Hd.	4
5	3296-2	Nut - ESNA Lock	12
6	23-005-0111	Idler Roller	1
7	01-260-1790	Sheave	4
8	01-100-0180	Bearing	4
9	01-271-0670	Conveyor Belt	1
*	01-271-0360	Pin - Lacing	1
10	3217-7	Hex Nut	2

Ref. No.	Part No.	Description	No. Used
11	23-005-0951	Bearing Pull	2
12	325-6	Capscrew - Hex Hd.	4
13	3253-7	Lock Washer	8
14	3256-26	"SAE" Flat Washer	8
15	23-004-0581	Roller Cover	1
16	3296-45	Nut - ESNA Lock	8
17	3296-23	Nut - ESNA Lock	12
18	67-1900	Capscrew - Hex Hd.	2
19	325-8	Capscrew - Hex Hd.	8
20	325-4	Capscrew - Hex Hd.	4
21	23-004-0721	Belt Roller Washer	8

* Not Illustrated

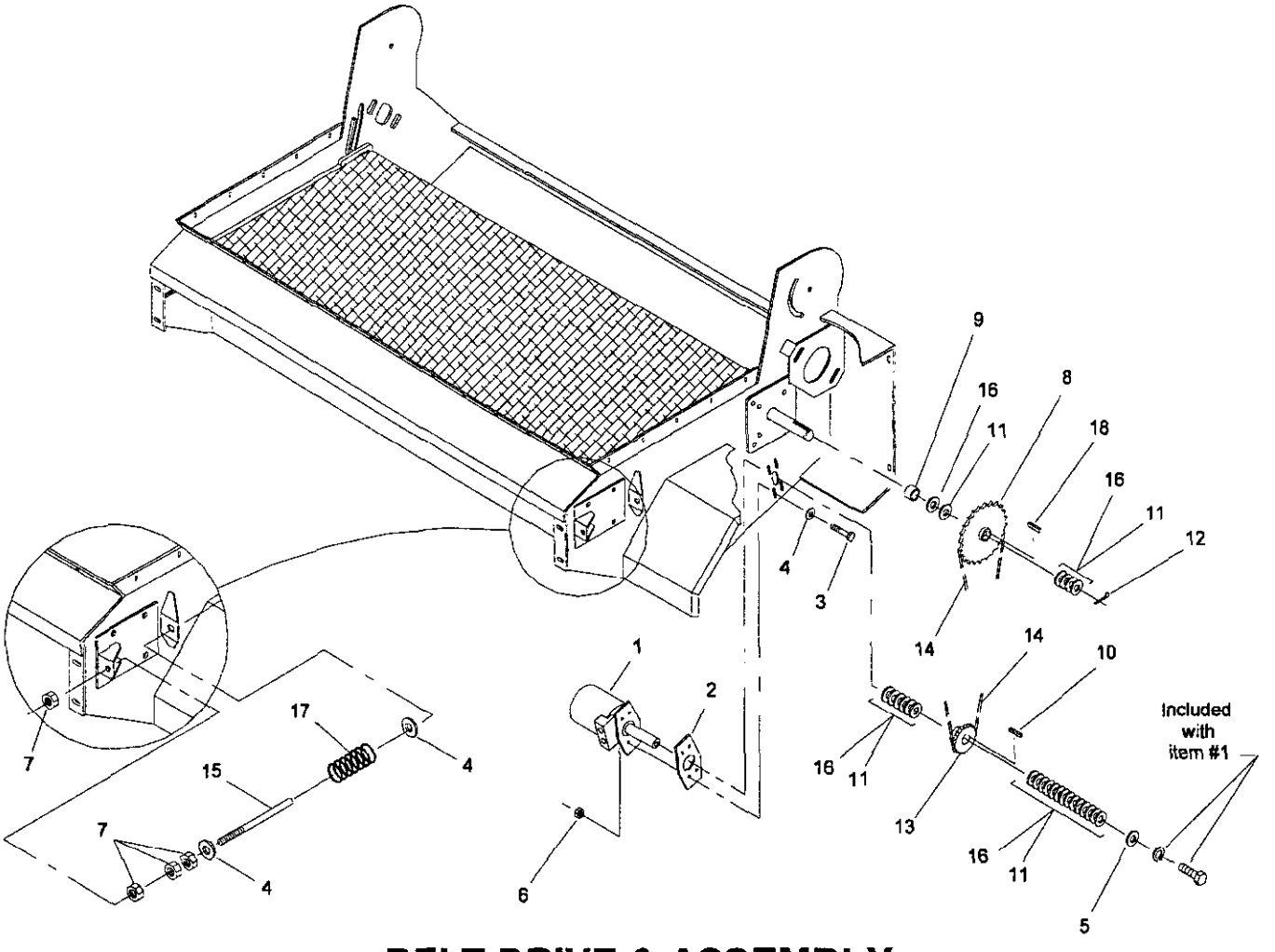

BELT DRIVE & ASSEMBLY

23-006F

Ref. No.	Part No.	Description	No. Used
1	01-304-1190	Hydraulic Motor	1
*	01-304-1420	Seal Kit	1
*	01-304-1200	Seal Kit	1
2	18-204-0461	Motor Spacer	1
3	325-7	Capscrew - Hex Hd.	4
4	3256-6	Flat Washer	8
5	3256-7	Flat Washer	1
6	3296-23	Nut - ESNA Lock	4
7	3217-9	Hex Nut	8
8	01-262-0960	Sprocket	1
9	23-004-0751	Sprocket Spacer	1

Ref. No.	Part No.	Description	No. Used
10	23-004-1091	Key	1
11	01-168-2014	Machinery Bushing	13(var)
12	3272-25	Cotter Pin	1
13	01-262-1540	Sprocket	1
14	23-004-0821	Drive Chain, #50	1
*	01-251-0020	Offset Link, #50	1
15	23-004-0741	Belt Tension Rod	2
16	01-168-2010	Machinery Bushing	13(var)
17	01-261-0400	Spring	2
18	10-7070	Key	1

* Not Illustrated

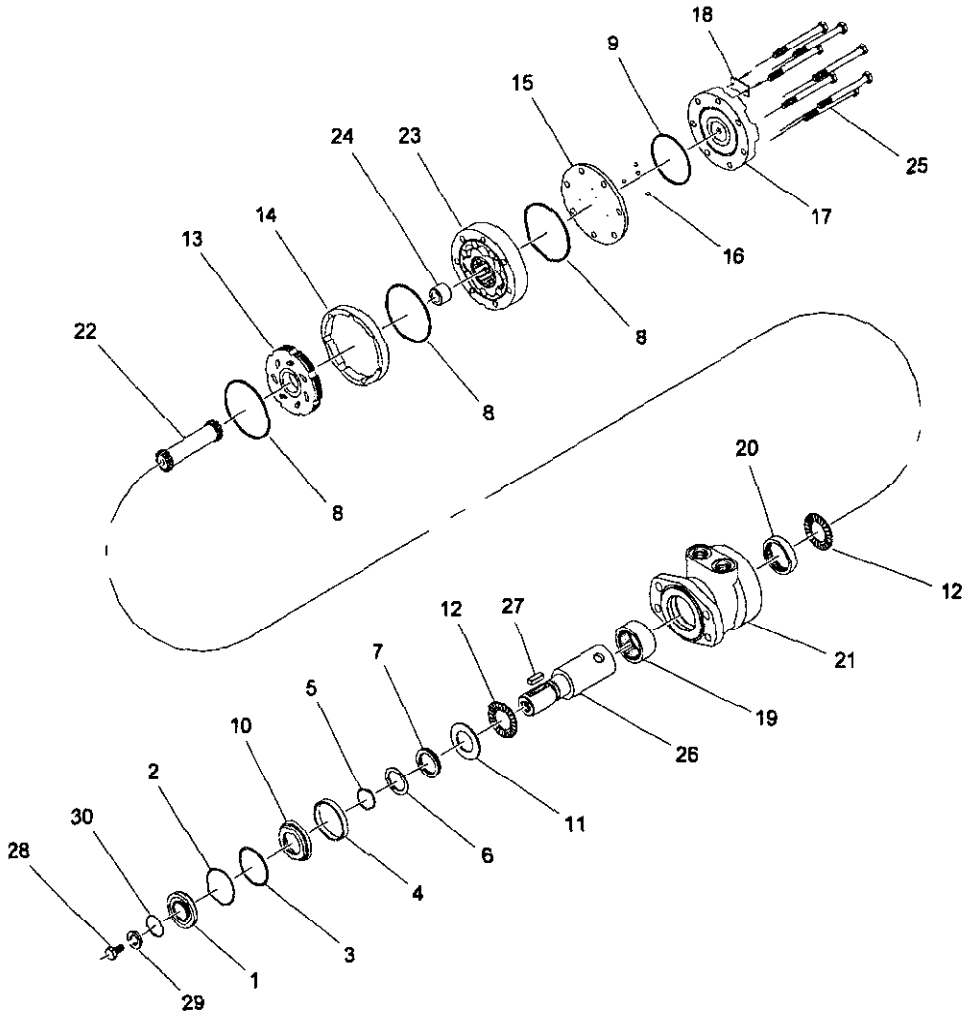

HYDRAULIC MOTOR - NO. 01-304-1190

HYDM1190

Ref. No.	Part No.	Description	No. Used
1		Dust Seal	1
2		Snap Ringl	1
3		Backup Shim	1
4		Lathe Cut Seal	1
5		Backup Shim	1
6		Teflon Backup	1
7		Shaft Seal	1
8		Body Seal	3
9		Endcover Seal	1
*	01-304-1420	Seal Kit (Inc. #1 - 9)	1
10		Seal Carrier	1
11		Thrust Washer	1
*	01-304-1200	Seal Kit (Incl. #10,11)	1
12	01-304-0660	Thrust Bearing	2
13	01-304-1560	Manifold (CCW)	1
14	01-304-1550	Manifold Boot	1
15		Balance Plate	1
16		Ball (3/16" steel)	4

Ref. No.	Part No.	Description	No. Used
*	01-304-1570	Balance Plate Kit (Incl. #15,16)	1
17	01-304-1580	Endcover	1
18		I. D. Tag Assembly	1
19		Roller Bearing	1
20		Roller Bearing	1
21		Housing	1
*	01-304-0910	Housing Kit (Incl. #19 - 21)	1
22	01-304-0920	Drive Link	1
23	01-304-0930	Rotor Set	1
24	01-304-1210	Drive Link Spacer	1
25	01-304-0940	Bolt Set (7)	1
26		Shaft	1
27		Shaft Key	1
28		Bolt	1
29		Lock Washer	1
30		Wire Ring	1
*	01-304-0460	Shaft Kit (Incl. #26 - 30)	1

* Not Illustrated

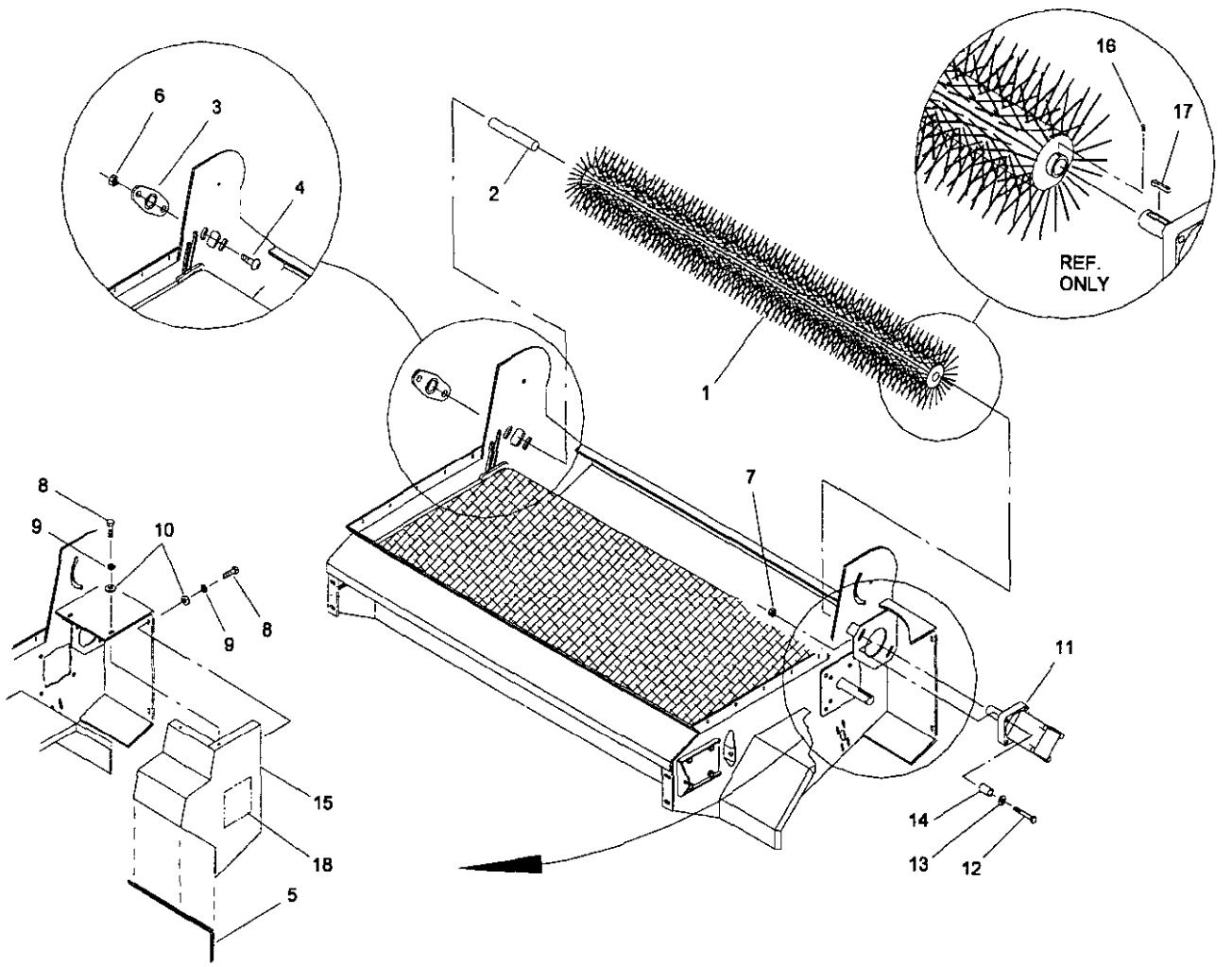

BRUSH ASSEMBLY

23-007F

Ref. No.	Part No.	Description	No. Used
1	01-286-0440	Brush (Incl. Ref. #16, 17)	1
2	23-004-0831	Brush Shaft	1
3	01-100-0160	Bearing	1
4	3231-25	Carriage Bolt	2
5	23-004-0931	Rubber Seal	1
6	3296-39	Nut - ESNA Lock Flg	2
7	32128-49	Nut - Whiz Lock Flg	2
8	322-3	Capscrew - Hex Hd.	4
9	3253-4	Lock Washer	4
10	3256-3	Flat Washer	4

Ref. No.	Part No.	Description	No. Used
11	01-304-0980	Hydraulic Motor	1
*	01-304-1000	Seal Kit	1
12	325-14	Capscrew - Hex Hd.	2
13	3256-26	"SAE" Flat Washer	2
14	23-004-0851	Motor Bolt Spacer	2
15	23-005-0131	Guard	1
16	3245-20	Set Screw	3
17	5-7280	Key	1
18	01-506-0050	Decal - Danger	1

* Not Illustrated

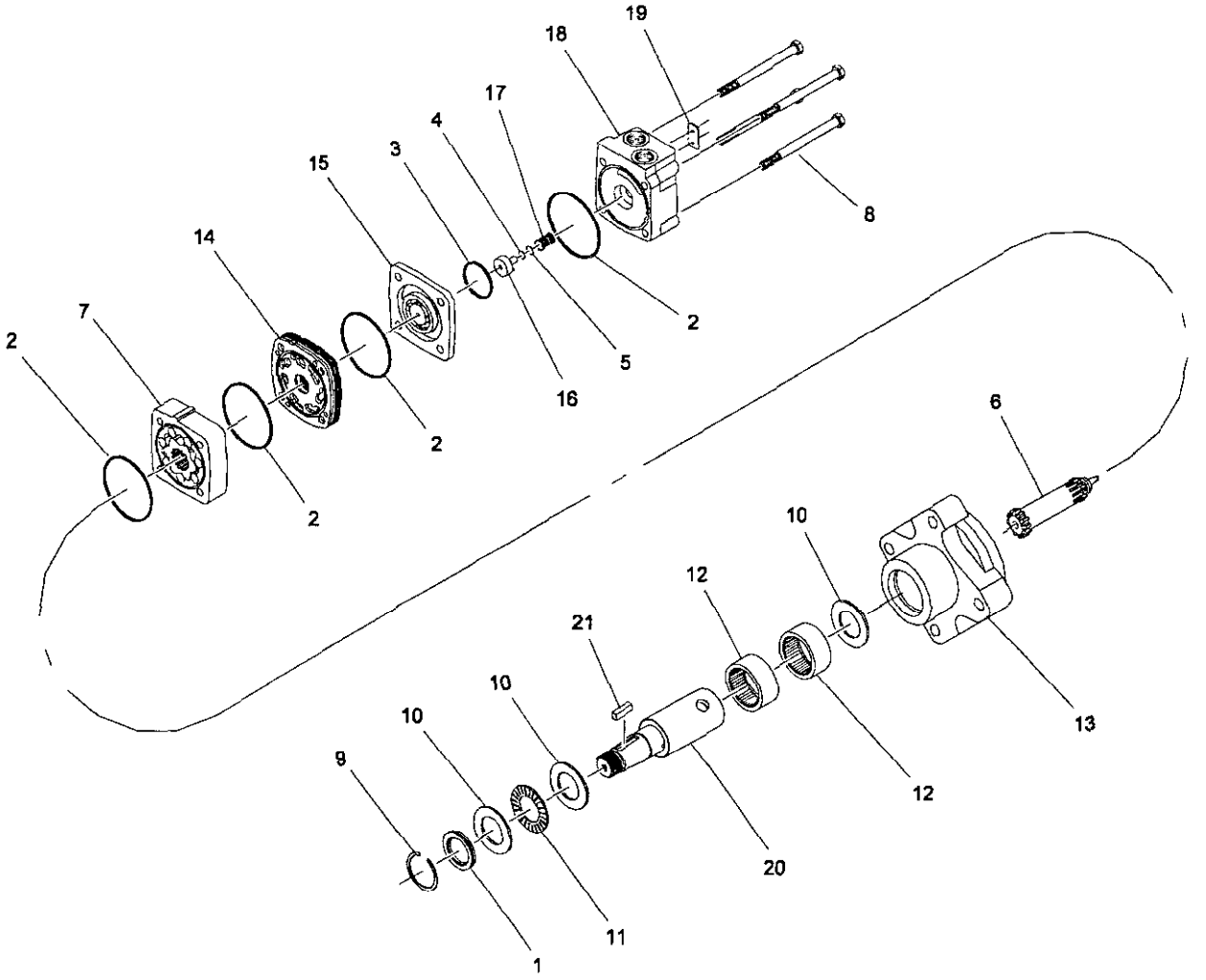

HYDRAULIC MOTOR - 01-304-0980

HYDM0980

Ref. No.	Part No.	Description	No. Used
1		Shaft Seal	1
2		Body Seal	4
3		Commutator Seal	1
4		Teflon Backup Seal	1
5		O-Ring Seal	1
*	01-304-1000	Seal Kit (Incl. #1 - 5)	1
6	01-304-1010	Drive Link	1
7	01-304-1020	Rotor Set	1
8	01-304-1030	Bolt Set (4)	1
9	01-304-1040	Snap Ring	1
10	01-304-1050	Thrust Washer	3
11	01-304-1060	Thrust Bearing	1
12	01-304-1070	Needle Bearing	2
13		Housing	1

Ref. No.	Part No.	Description	No. Used
*	01-304-1080	Housing Bearing Kit (Incl. #10,12,13)	1
14	01-304-1090	Manifold	1
15	01-304-1100	Commutator Assembly	1
16	01-304-1110	Endcover Piston	1
17	01-304-1120	Piston Spring	1
18		Endcover	1
*	01-304-1130	Endcover Kit (Incl. #2,4,5,16,17,18)	1
19		I.D. Tag Assembly	1
20		Shaft	1
21		Shaft Key	1
*	01-304-1180	Shaft Kit (Incl. #20 - 21)	1

* Not Illustrated

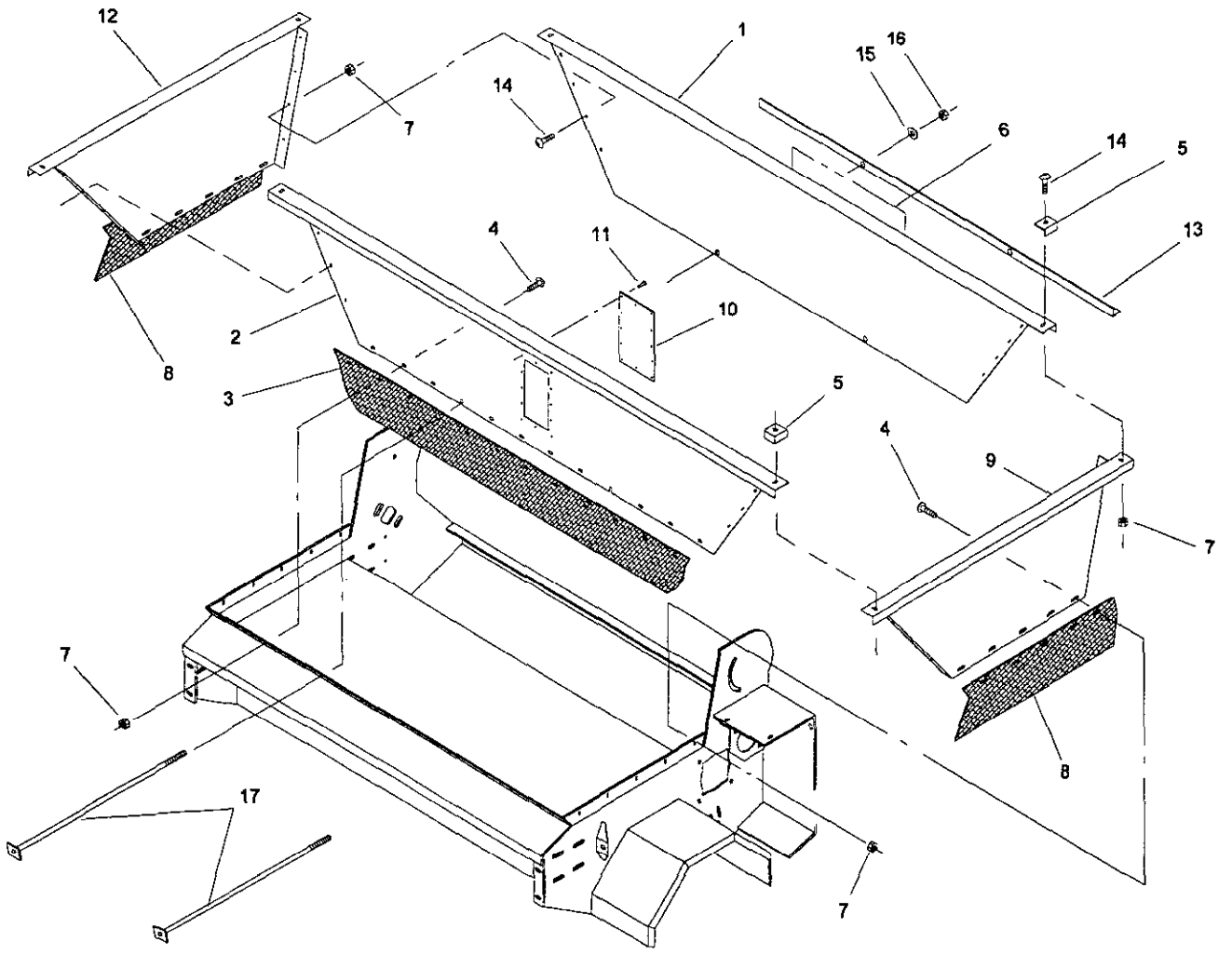

HOPPER ASSEMBLY

23-008F

Ref. No.	Part No.	Description	No. Used
1	23-004-1001	Hopper Back	1
2	23-004-0541	Hopper Front	1
3	23-004-0801	Skirt-long	1
4	3229-2	Carriage Bolt	20
5	23-004-0971	Corner Guard	4
6	66-1210	Decal - Toro	1
7	32128-33	Nut - Whiz Lock Flg	40
8	23-004-0791	Skirt-short	2
9	23-004-0521	Hopper Side - L.H.	1

Ref. No.	Part No.	Description	No. Used
10	23-004-0981	Sight Glass	1
11	3269-3	Pop Rivet	14
12	23-004-0871	Hopper Side - R.H.	1
13	23-004-1031	Hopper Brace	1
14	3229-1	Carriage Bolt	20
15	3256-4	Flat Washer	2
16	3296-39	Nut - ESNA Lock	2
17	23-005-1101	Support Rod	2

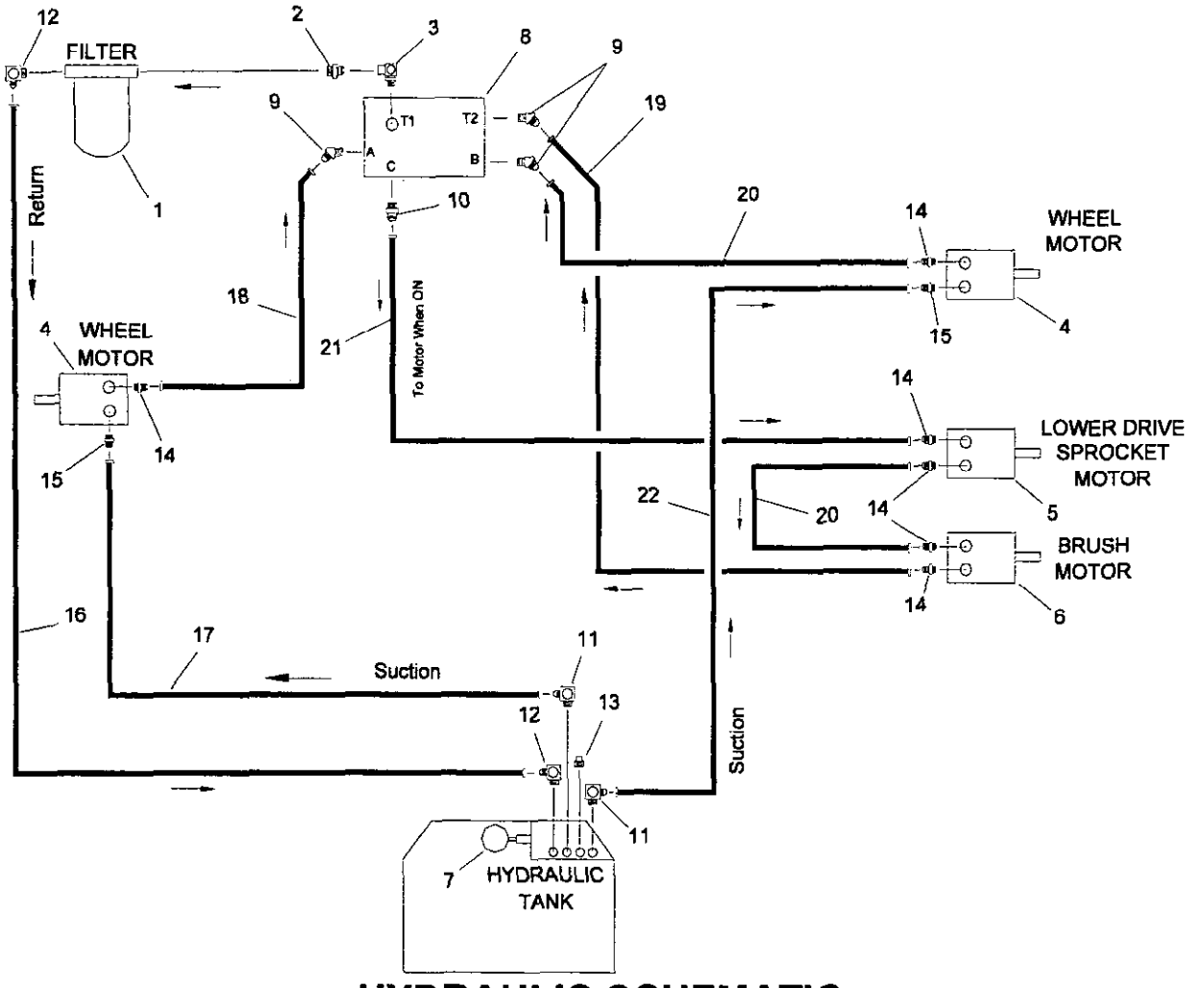

HYDRAULIC SCHEMATIC

23-012

Ref. No.	Part No.	Description	No. Used
1	01-316-0210	Filter Assembly	1
*	01-315-0090	Filter Head	1
*	01-317-0240	Filter Element	1
2	01-201-1370	Fitting	1
3	01-201-4530	Fitting	1
4	01-304-0990	Hyd. Motor	2
*	01-304-1000	Seal Kit	1
5	01-304-1190	Hyd. Motor	1
*	01-304-1420	Seal Kit	1
*	01-304-1200	Seal Kit	1
6	01-304-0980	Hyd. Motor	1
*	01-304-1000	Seal Kit	1
7	01-303-0110	Gauge	1
8	01-308-1590	Hyd. Valve	1

Ref. No.	Part No.	Description	No. Used
9	01-201-4700	Fitting	3
10	01-201-0630	Fitting	1
11	01-201-2160	Fitting	2
12	01-201-1220	Fitting	2
13	01-451-0160	Pipe Plug	1
14	01-201-1350	Fitting	6
15	01-201-2130	Fitting	2
16	01-312-5470	Hyd. Hose	1
17	01-312-5450	Hyd. Hose	1
18	01-312-2220	Hyd. Hose	1
19	01-312-5490	Hyd. Hose	1
20	01-312-2250	Hyd. Hose	2
21	01-312-5500	Hyd. Hose	1
22	01-312-5480	Hyd. Hose	1

* Not Illustrated

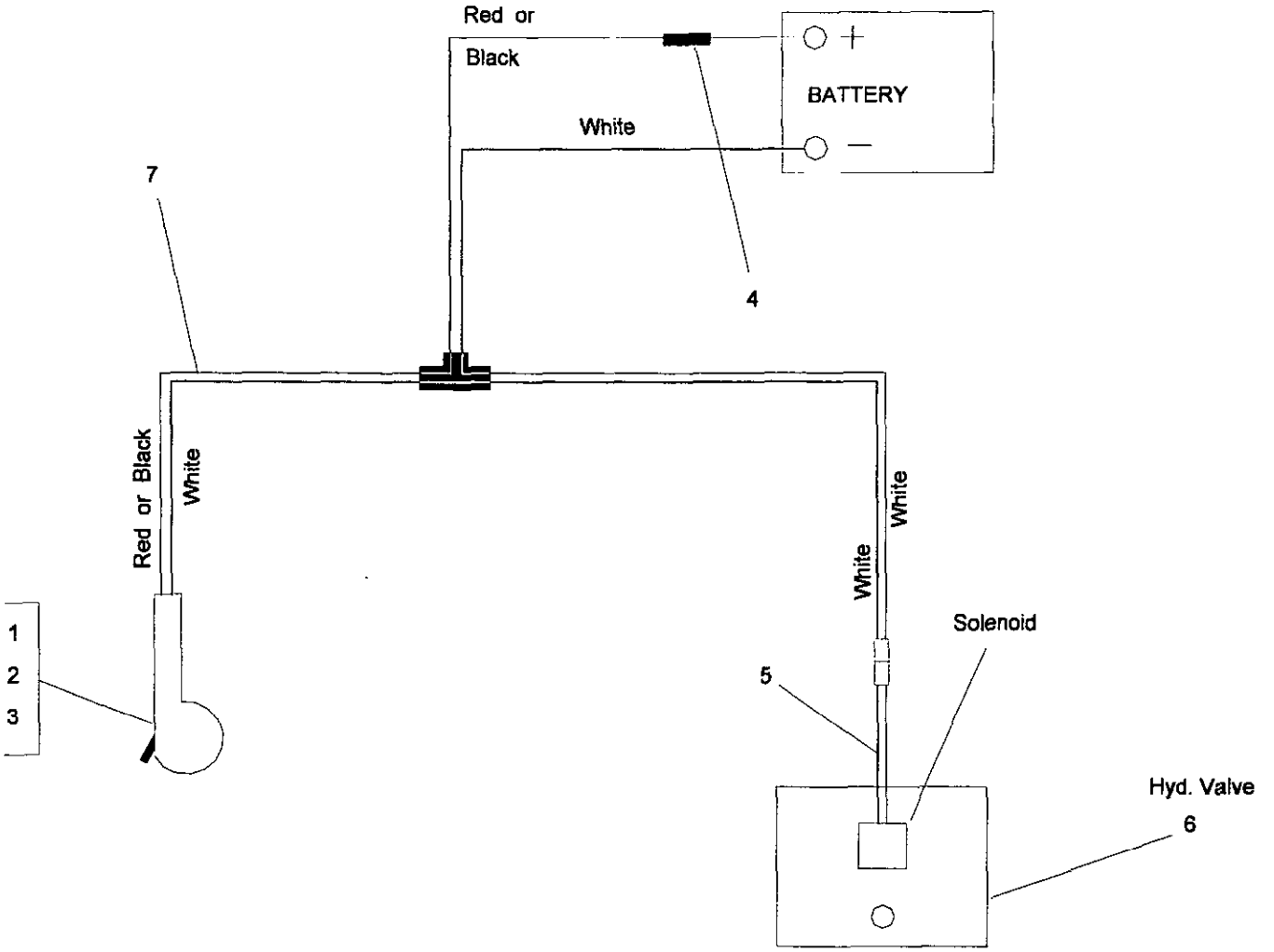

ELECTRICAL SCHEMATIC

23-013

Ref. No.	Part No.	Description	No. Used
1	01-603-0750	Switch	1
2	01-603-0760	Boot	1
3	01-603-0770	Switch Box	1
4	01-612-0520	Fuse	1

Ref. No.	Part No.	Description	No. Used
5	01-606-0250	Wiring Harness, short half	1
6	01-308-1010	Hydraulic Valve	1
7	01-606-0220	Wiring Harness, complete (Includes Ref. #1,2,3,4,5)	1

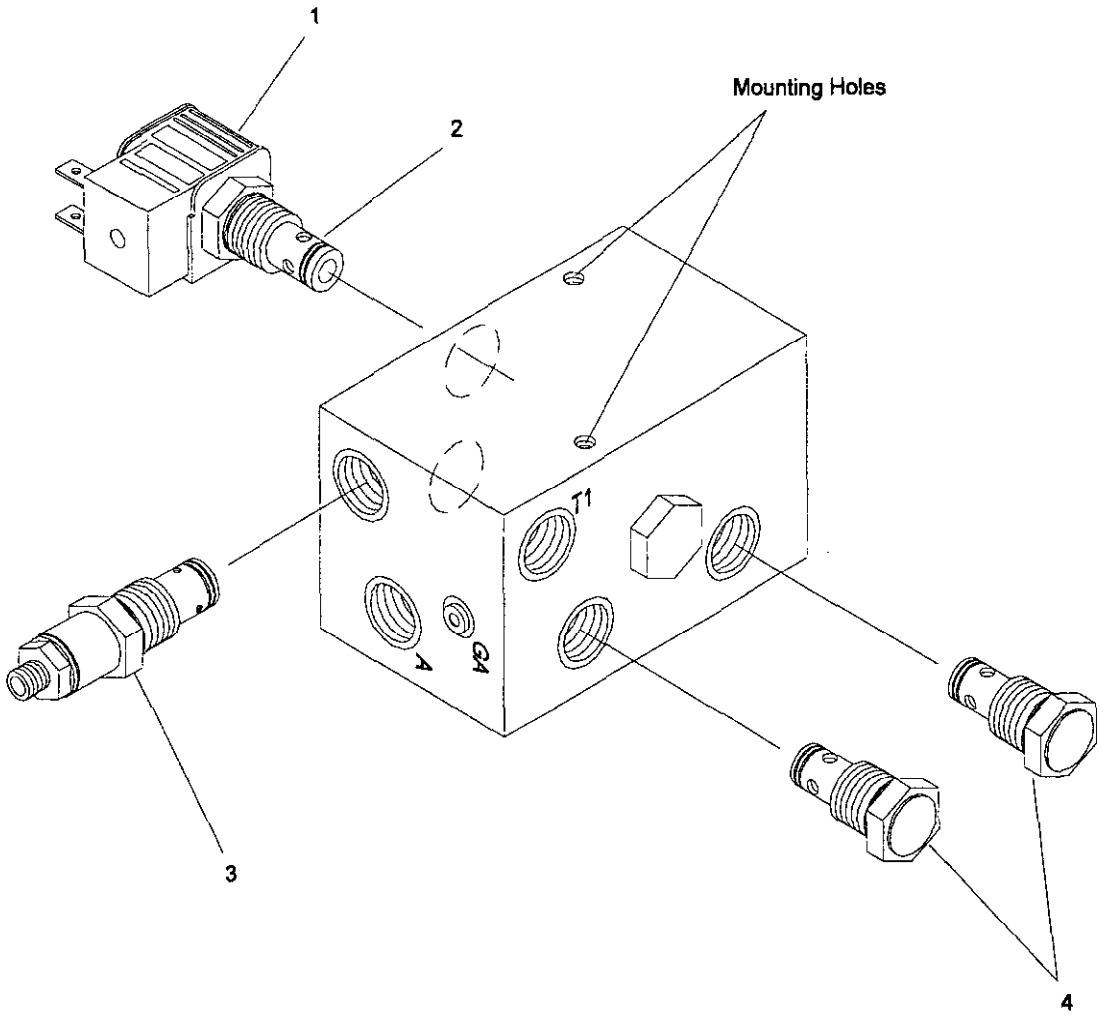

HYDRAULIC VALVE - NO. 01-308-1590

VLE-1590

Ref. No.	Part No.	Description	No. Used
1	01-308-1740	Solenoid Coil	1
2	01-308-1610	Solenoid Valve	1

Ref. No.	Part No.	Description	No. Used
3	01-308-1720	Relief Valve (1100psi)	1
4	01-308-1730	Check Valve	2

PART NUMBER INDEX

Part No.	Description	Pg. No.	Ref. No.	Qty.
01-100-0160	Bearing	9	3	1
01-100-0180	Bearing	6	8	4
01-158-2040	Lug Bolt	2	21	10
01-168-1210	Machinery Bushing	2	17	14
01-168-2010	Machinery Bushing	7	16	13
01-168-2014	Machinery Bushing	7	11	13
01-190-1210	Slotted Nut	2	9	2
01-201-0630	Fitting	12	10	1
01-201-1220	Fitting	12	12	2
01-201-1350	Fitting	12	14	6
01-201-1370	Fitting	12	2	1
01-201-2130	Fitting	12	15	2
01-201-2160	Fitting	12	11	2
01-201-4530	Fitting	12	3	1
01-201-4700	Fitting	12	9	3
01-215-0100	Grease Fitting	2	*	4
01-251-0020	Offset Link	7	*	1
01-256-0200	Knob	4	4	1
01-260-1790	Sheave	6	7	4
01-261-0400	Spring	7	17	2
01-262-0960	Sprocket	7	8	1
01-262-1540	Sprocket	7	13	1
01-269-0060	Axle Spacer	2	1	8
01-269-0320	Tire	2	22	2
01-269-0350	Tire	2	6	4
01-269-0360	Wheel	2	18	4
01-269-1020	Wheel	2	20	2
01-269-1530	Valve Stem	5	16	1
01-269-2540	Hub	2	15	2
01-271-0360	Pin - Lacing	6	*	1
01-271-0670	Conveyor Belt	6	9	1
01-286-0440	Brush	9	1	1
01-303-0110	Gauge	12	7	1
01-304-0460	Shaft Kit	8	*	1
01-304-0660	Thrust Bearing	8	12	2
01-304-0910	Housing Kit	8	*	1
01-304-0920	Drive Link	8	22	1
01-304-0930	Rotor Set	8	23	1
01-304-0940	Bolt Set	8	25	1
01-304-0980	Hyd. Motor	12	6	1
01-304-0980	Hydraulic Motor	9	11	1
01-304-0990	Hyd. Motor	12	4	2
01-304-0990	Hydraulic Motor	2	14	2
01-304-1000	Seal Kit	10	*	1
01-304-1000	Seal Kit	12	*	1
01-304-1000	Seal Kit	2	*	1
01-304-1000	Seal Kit	3	*	1
01-304-1000	Seal Kit	9	*	1
01-304-1010	Drive Link	10	6	1
01-304-1020	Rotor Set	10	7	1
01-304-1030	Bolt Set	10	8	1
01-304-1040	Snap Ring	10	9	1
01-304-1040	Snap Ring	3	9	1
01-304-1050	Thrust Washer	10	10	3
01-304-1050	Thrust Washer	3	10	3
01-304-1060	Thrust Bearing	10	11	1
01-304-1060	Thrust Bearing	3	11	1
01-304-1070	Needle Bearing	10	12	2
01-304-1070	Needle Bearing	3	12	2
01-304-1080	Housing Bearing Kit	10	*	1
01-304-1080	Housing Bearing Kit	3	*	1
01-304-1090	Manifold	10	14	1
01-304-1090	Manifold	3	14	1
01-304-1100	Commutator Assembly	10	15	1
01-304-1100	Commutator Assembly	3	15	1
01-304-1110	Endcover Piston	10	16	1
01-304-1110	Endcover Piston	3	16	1
01-304-1120	Piston Spring	10	17	1
01-304-1120	Piston Spring	3	17	1
01-304-1130	Endcover Kit	10	*	1
01-304-1130	Endcover Kit	3	*	1
01-304-1150	Drive Link	3	6	1
01-304-1160	Rotor Set	3	7	1
01-304-1170	Bolt Set	3	8	1
01-304-1180	Shaft Kit	10	*	1
01-304-1180	Shaft Kit	3	*	1
01-304-1190	Hyd. Motor	12	5	1
01-304-1190	Hydraulic Motor	7	1	1
01-304-1200	Seal Kit	12	*	1
01-304-1200	Seal Kit	7	*	1
01-304-1200	Seal Kit	8	*	1
01-304-1210	Drive Link Spacer	8	24	1
01-304-1240	Pack Nut	2	12	2
01-304-1240	Pack Nut	3	22	1
01-304-1420	Seal Kit	12	*	1
01-304-1420	Seal Kit	7	*	1
01-304-1420	Seal Kit	8	*	1
01-304-1550	Manifold Boot	8	14	1
01-304-1560	Manifold (CCW)	8	13	1
01-304-1570	Balance Plate Kit	8	*	1
01-304-1580	Endcover	8	17	1
01-308-1590	Hydraulic Valve	12	8	1
01-308-1590	Hydraulic Valve	13	6	1
01-308-1590	Hydraulic Valve	5	11	1
01-308-1610	Solenoid Valve	14	2	1
01-308-1720	Relief Valve	14	3	1
01-308-1730	Check Valve	14	4	2
01-308-1740	Solenoid Coil	14	1	1
01-312-2220	Hyd. Hose	12	18	1
01-312-2250	Hyd. Hose	12	20	2
01-312-5450	Hyd. Hose	12	17	1
01-312-5470	Hyd. Hose	12	16	1
01-312-5480	Hyd. Hose	12	22	1
01-312-5490	Hyd. Hose	12	19	1
01-312-5500	Hyd. Hose	12	21	1
01-315-0090	Filter Head	12	*	1
01-316-0210	Filter Assembly	12	1	1
01-317-0240	Filter Element	12	*	1
01-405-0460	Seal	2	2	8
01-451-0160	Pipe Plug	12	13	1
01-506-0050	Decal - Danger	9	18	1
01-506-0210	Decal - Height Adj.	4	13	1
01-506-0240	Decal - Warning	1	8	2
01-506-0250	Decal - Danger	5	8	1
01-506-0690	Decal - Topdresser 2300	1	6	2
01-603-0750	Switch	13	1	1
01-603-0760	Boot	13	2	1
01-603-0770	Switch Box	13	3	1
01-606-0220	Wiring Harness	13	7	1
01-606-0250	Wiring Harness	13	5	1
01-612-0520	Fuse	13	4	1
02-201-2170	Cap	5	17	1
10-7070	Key	7	18	1
18-204-0461	Motor Spacer	7	2	1

* Not Illustrated

PART NUMBER INDEX

Part No.	Description	Pg. No.	Ref. No.	Qty.
23-002-0021	Pressure Cap Assembly	5	*	1
23-004-0221	Gate Seal	4	9	1
23-004-0241	Axle Bracket	2	8	2
23-004-0271	Conveyor Top	6	2	1
23-004-0521	Hopper Side - L.H.	11	9	1
23-004-0541	Hopper Front	11	2	1
23-004-0581	Roller Cover	6	15	1
23-004-0721	Belt Roller Washer	6	21	8
23-004-0721	Plastic Washer	4	5	2
23-004-0741	Belt Tension Rod	7	15	2
23-004-0751	Sprocket Spacer	7	9	1
23-004-0791	Skirt-short	11	8	2
23-004-0801	Skirt-long	11	3	1
23-004-0821	Drive Chain	7	14	1
23-004-0831	Brush Shaft	9	2	1
23-004-0851	Motor Bolt Spacer	9	14	2
23-004-0871	Hopper Side - R.H.	11	12	1
23-004-0931	Rubber Seal	9	5	1
23-004-0971	Corner Guard	11	5	4
23-004-0981	Sight Glass	11	10	1
23-004-1001	Hopper Back	11	1	1
23-004-1021	Gate Rod	4	17	2
23-004-1031	Hopper Brace	11	13	1
23-004-1041	Slide	4	11	2
23-004-1061	Adjustment Lug-long	4	15	1
23-004-1091	Key	7	10	1
23-005-0103	Main Frame	1	1	1
23-005-0111	Idler Roller	6	6	1
23-005-0121	Drive Roller	6	1	1
23-005-0131	Guard	9	15	1
23-005-0141	Gate Control Arm	4	1	1
23-005-0151	Axle	2	7	2
23-005-0161	Hitch	1	2	1
23-005-0171	Hydraulic Tank	5	1	1
23-005-0951	Bearing Pull	6	11	2
23-005-1101	Support Rod	11	17	2
23-005-1111	Gate	4	8	1
2412-133	R-Clamp	5	18	2
2412-74	R-Clamp	5	10	1
254-78	Bearing Cone	2	4	8
321-6	Capscrew - Hex Hd.	5	20	2
32122-28	Truss Head Machine Screw	6	3	12
32128-33	Nut - Whiz Lock Flg	11	7	40
32128-49	Nut - Whiz Lock Flg	9	7	2
32153-5	Nut - Side Lock	4	6	1
3217-7	Hex Nut	6	10	2
3217-9	Hex Nut	7	7	8
3218-5	Jam Nut	4	2	4
322-3	Capscrew - Hex Hd.	9	8	4
322-5	Capscrew - Hex Hd.	5	12	3
3229-1	Carriage Bolt	11	14	20
3229-2	Carriage Bolt	11	4	20
323-6	Capscrew - Hex Hd.	2	11	2
323-6	Capscrew - Hex Hd.	5	2	4
3231-25	Carriage Bolt	9	4	2
3245-20	Set Screw	9	16	3
325-10	Capscrew - Hex Hd.	2	3	8
325-14	Capscrew - Hex Hd.	1	3	2
325-14	Capscrew - Hex Hd.	9	12	2
325-4	Capscrew - Hex Hd.	6	20	4
325-5	Capscrew - Hex Hd.	4	3	2
325-5	Capscrew - Hex Hd.	6	4	4
325-6	Capscrew - Hex Hd.	6	12	4
325-7	Capscrew - Hex Hd.	7	3	4
325-8	Capscrew - Hex Hd.	6	19	8
3253-4	Lock Washer	5	14	2
3253-4	Lock Washer	9	9	4
3253-7	Lock Washer	6	13	8
3256-2	Flat Washer	5	6	2
3256-26	"SAE" Flat Washer	2	19	8
3256-26	"SAE" Flat Washer	4	7	11
3256-26	"SAE" Flat Washer	6	14	8
3256-26	"SAE" Flat Washer	9	13	2
3256-3	Flat Washer	5	13	2
3256-3	Flat Washer	9	10	4
3256-4	Flat Washer	11	15	2
3256-4	Flat Washer	2	16	2
3256-4	Flat Washer	5	5	4
3256-6	Flat Washer	1	4	4
3256-6	Flat Washer	4	14	5
3256-6	Flat Washer	7	4	8
3256-7	Flat Washer	7	5	1
3269-20	Pop Rivet	4	10	26
3269-3	Pop Rivet	11	11	14
3272-11	Cotter Pin	4	18	2
3272-15	Cotter Pin	2	10	2
3272-25	Cotter Pin	7	12	1
3290-357	Nut - Whiz Lock Flg	5	4	4
3296-2	Nut - ESNA Lock	6	5	12
3296-23	Nut - ESNA Lock	1	5	2
3296-23	Nut - ESNA Lock	2	5	8
3296-23	Nut - ESNA Lock	4	16	4
3296-23	Nut - ESNA Lock	6	17	12
3296-23	Nut - ESNA Lock	7	6	4
3296-29	Nut - ESNA Lock	5	15	1
3296-39	Nut - ESNA Lock	11	16	2
3296-39	Nut - ESNA Lock	2	13	2
3296-39	Nut - ESNA Lock Flg	9	6	2
3296-42	Nut - ESNA Lock	5	3	2
3296-45	Nut - ESna Lock	6	16	8
3334-945	Cable Tie	5	21	4
5-7280	Key	9	17	1
56-104-0301	Adjustment Lug-short	4	12	3
62-7400	Decal - Toro	5	9	1
66-1210	Decal - Toro	11	6	1
67-1900	Capscrew - Hex Hd.	6	18	2
74-0720	Manual Tube	5	19	1
75-5190	Decal - No Riders	1	7	2
75-5190	Decal - No Riders	5	7	1

* Not Illustrated

PRODUCT CHANGES

In an effort to make improvements available to TORO owners as quickly as possible minor changes are incorporated into Toro's products from time to time that do not become immediately shown in the Parts Catalog. If such a change has been made in your unit which is not reflected in your manual see your TORO Distributor or an Authorized Service Dealer for information and part numbers.

IDENTIFICATION & ORDERING

MODEL AND NUMBERS

The Topdresser 2300 has two identification numbers; a model number and a serial number. The two numbers are stamped on a plate which is located on the main frame. In any correspondence concerning the Topdresser 2300, supply model and serial numbers to assure that correct information and replacement parts are obtained.

To order replacement parts from your TORO Distributor or an Authorized Service Dealer, supply the following information:

1. Model and serial number of the unit.
2. Part number description and the quantity of part (s) desired.

NOTE: Do not order by reference number if a parts catalog is being used: use the PART NUMBER.

TABLE OF CONTENTS

Description	Page	Description	Page
Tongue Assembly	1	Brush Assembly	9
Wheel Assembly	2	Hydraulic Motor - No. 01-304-0980	10
Hydraulic Motor - No. 01-304-0990	3	Hopper Assembly	11
Gate Control Assembly	4	Hydraulic Schematic	12
Hydraulic Tank Assembly	5	Electrical Schematic	13
Roller Assembly	6	Hydraulic Valve - No. 01-308-1590	14
Belt Drive and Tension	7	Hydraulic Valve - No. 01-308-1600	15
Hydraulic Motor - No. 01-304-1190	8	Part Number Index	16 - 18

NOTES

NOTES

MAINTENANCE RECORD

Date								