FORM NO. 01-505-1080

TORO

MODEL NO. 44575 - 20101 to 30101

PARTS CATALOG

COMMERCIAL CHIPPER 1820D

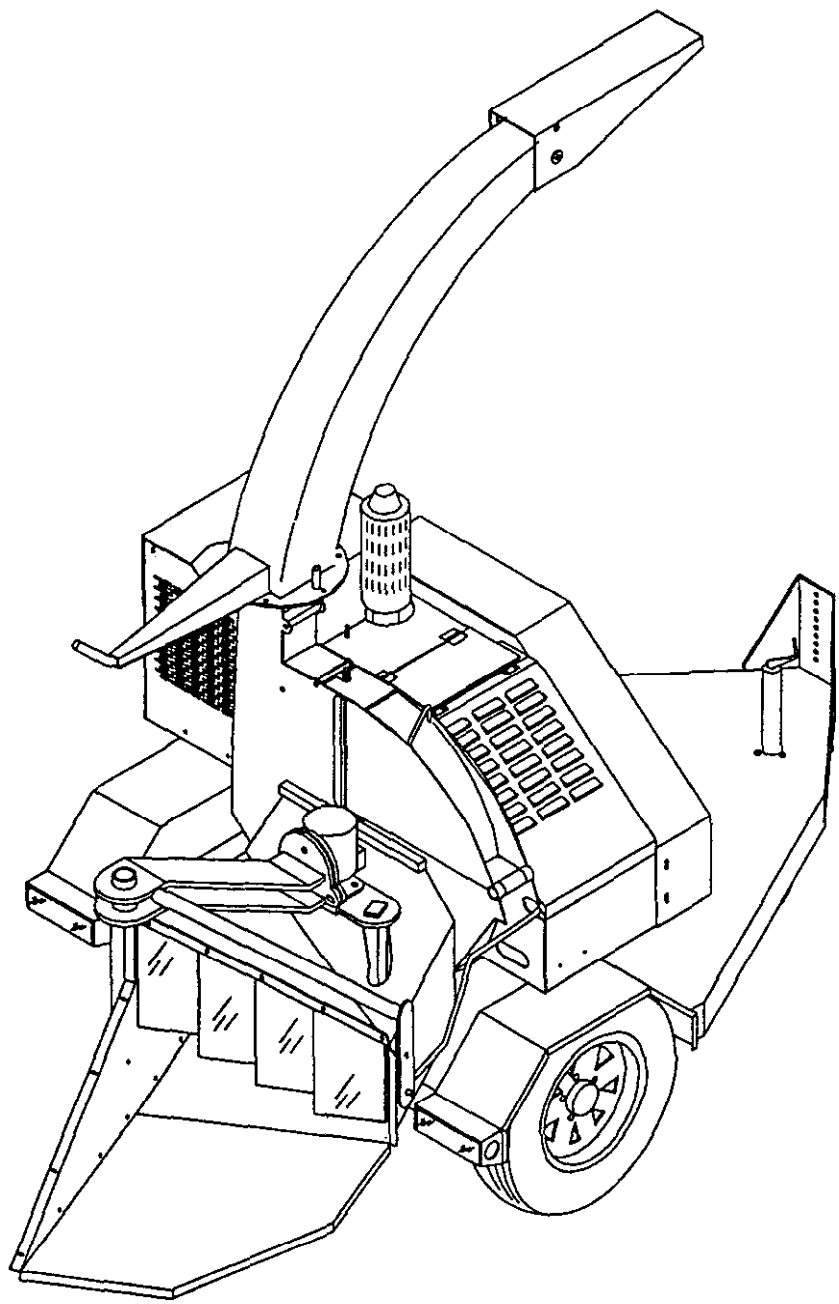

©The TORO Company - 1992

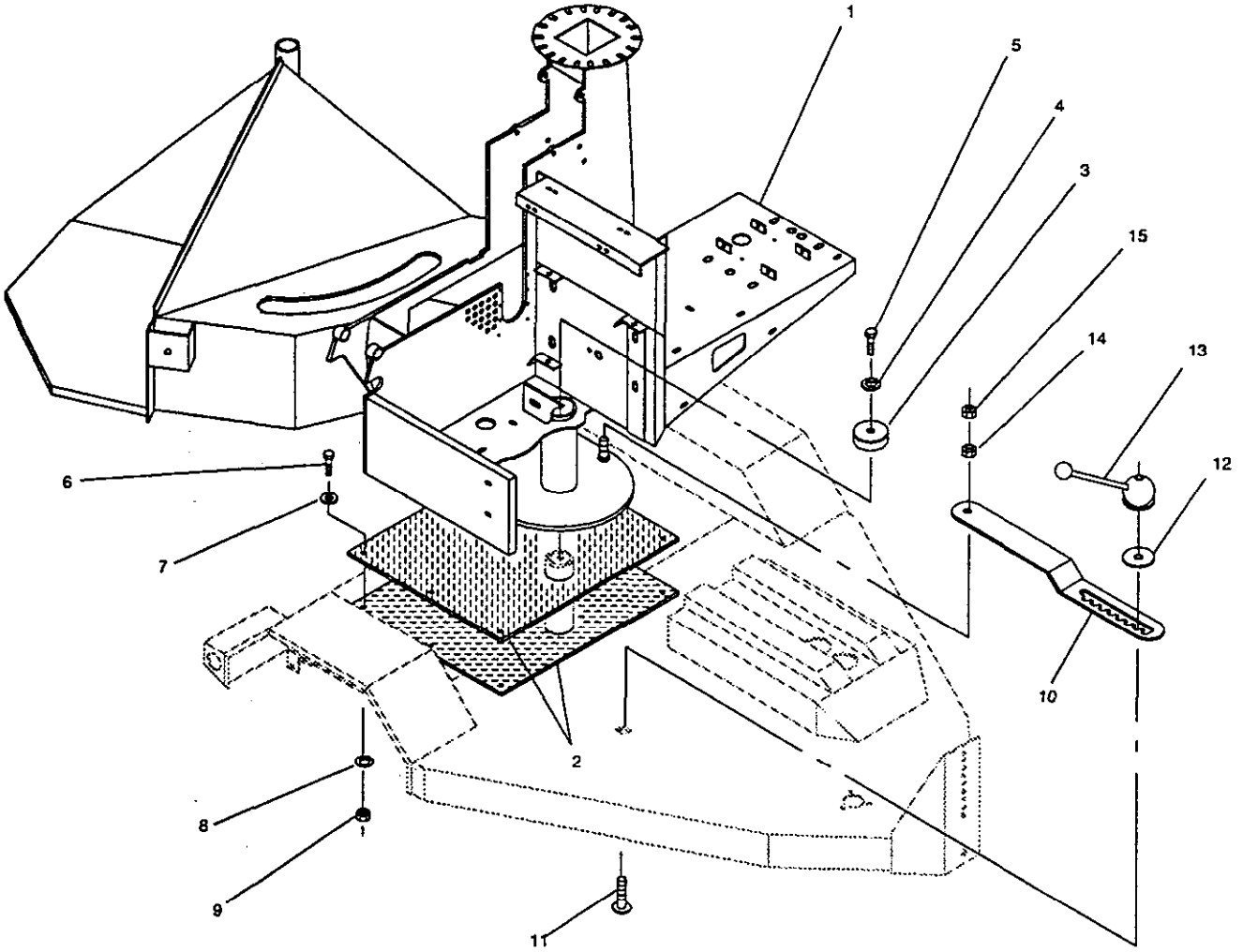

MAIN FRAME MOUNTING

182K-017

Ref. No.	Part No.	Description	No. Used
1.	18-205-2803	Chipper Main Frame	1
2.	18-204-0451	Pivot Base, 1/4" UHMW	2
3.	18-205-0171	Pivot End Cap	1
4.	01-166-0810	Lock Washer, 1/2"	1
5.	01-178-0812	Capscrew - Hex Hd., 1/2" - 13 x 1-1/2"	1
6.	01-178-0614	Capscrew - Hex Hd., 3/8" - 16 x 1-3/4"	6
7.	01-166-0600	Flat Washer, 3/8"	6

Ref. No.	Part No.	Description	No. Used
8.	01-166-0610	Lock Washer, 3/8"	6
9.	01-188-0616	Hex Nut, 3/8" - 16	6
10.	18-204-0641	Rotate Stop	1
11.	01-173-1220	Carriage Bolt, 3/4" - 10 x 2-1/2"	1
12.	18-204-2161	Rotate Washer	1
13.	01-256-0190	Lever	1
14.	01-188-1210	Hex Nut, 3/4" - 10	1
15.	01-191-1210	Jam Nut, 3/4" - 10	1

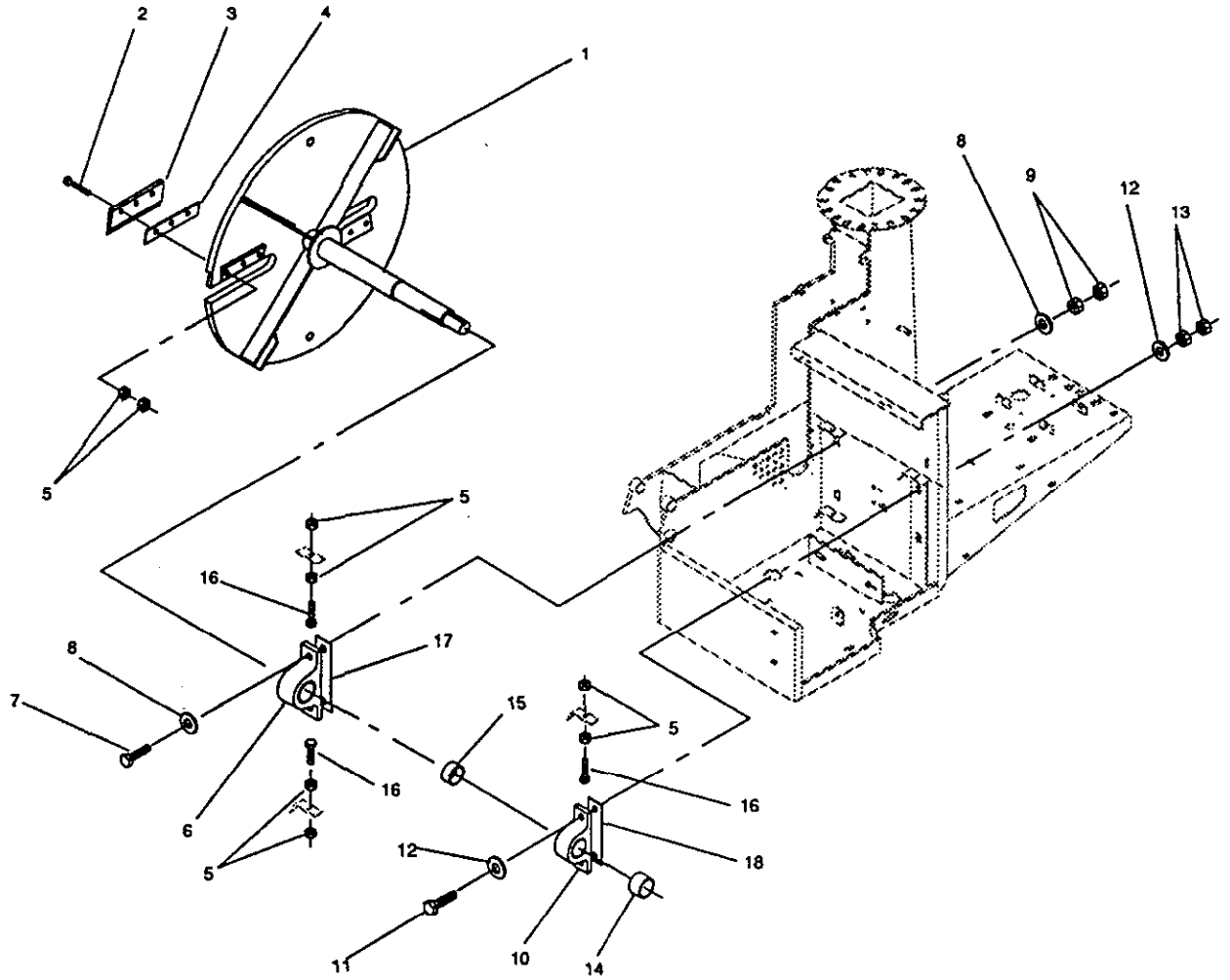

CHIPPER DISC ASSEMBLY

182K-008

Ref. No.	Part No.	Description	No. Used
1.	18-205-0123	Chipper Disc	1
2.	01-158-1150	Capscrew - Flat Hd. Socket, 1/2" - 13 x 2-1/2"	6
3.	01-283-0320	Blade	2
4.	98-604-3781	Blade Spacer, 10 ga.	2
*	98-604-3791	Blade Spacer, 22 ga. (use only when necessary)	4
5.	01-188-0813	Hex Nut, 1/2" - 13	18
6.	01-113-0200	Bearing, 2-7/16" P.B.	1
7.	01-178-1232	Capscrew - Hex Hd., 3/4" - 10 x 4"	2
8.	01-166-1200	Flat Washer, 3/4"	4

Ref. No.	Part No.	Description	No. Used
9.	01-188-1210	Hex Nut, 3/4" - 10	4
10.	01-113-0160	Bearing, 2" P.B.	1
11.	01-178-1024	Capscrew - Hex Hd., 5/8" - 11 x 3"	2
12.	01-166-1000	Flat Washer, 5/8"	4
13.	01-188-1011	Hex Nut, 5/8" - 11	4
14.	18-204-1961	Bearing Spacer (long)	1
15.	18-204-1971	Bearing Spacer (short)	1
16.	01-178-0816	Capscrew - Hex Hd., 1/2" - 13 x 2"	3
17.	18-204-3031	Large Bearing Spacer, 22 ga.	1(Var)
18.	18-204-3021	Small Bearing Spacer, 22 ga.	1(Var)

* Not Illustrated

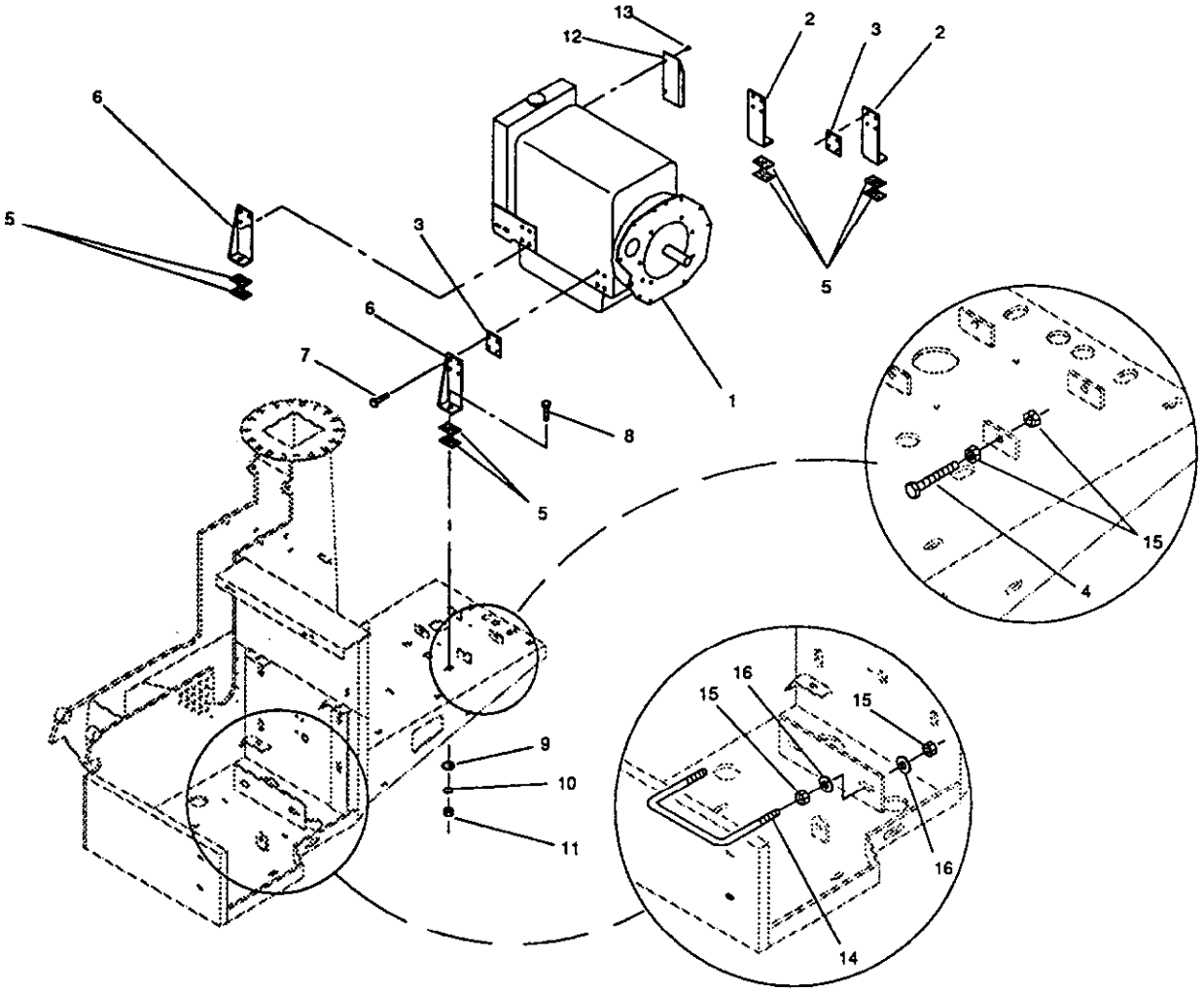

ENGINE MOUNTING

182K-009

Ref. No.	Part No.	Description	No. Used
1.	01-270-3370	Engine, 20hp Kubota	1
2.	18-205-2901	Motor Mount - RH	2
3.	18-204-2731	Motor Mount Spacer	2
4.	01-178-0620	Capscrew - Hex Hd., 3/8" - 16 x 2-1/2"	4
5.	18-204-2751	Motor Mount Cushion	8
6.	18-205-2891	Motor Mount - LH	2
7.	01-178-0612	Capscrew - Hex Hd., 3/8" - 16 x 1-1/2"	16
8.	01-178-1016	Capscrew - Hex Hd., 5/8" - 11 x 2"	4

Ref. No.	Part No.	Description	No. Used
9.	01-166-1000	Flat Washer, 5/8"	4
10.	01-166-1010	Lock Washer, 5/8"	4
11.	01-188-1011	Hex Nut, 5/8" - 11	4
12.	18-204-2761	Throttle Linkage Mount	1
13.	01-178-0502	Capscrew - Hex Hd., 5/16" - 18 x 1/4"	2
14.	48-004-3831	Battery Hold Down	1
15.	01-188-0616	Hex Nut, 3/8" - 16	12
16.	01-166-0600	Flat Washer, 3/8"	4

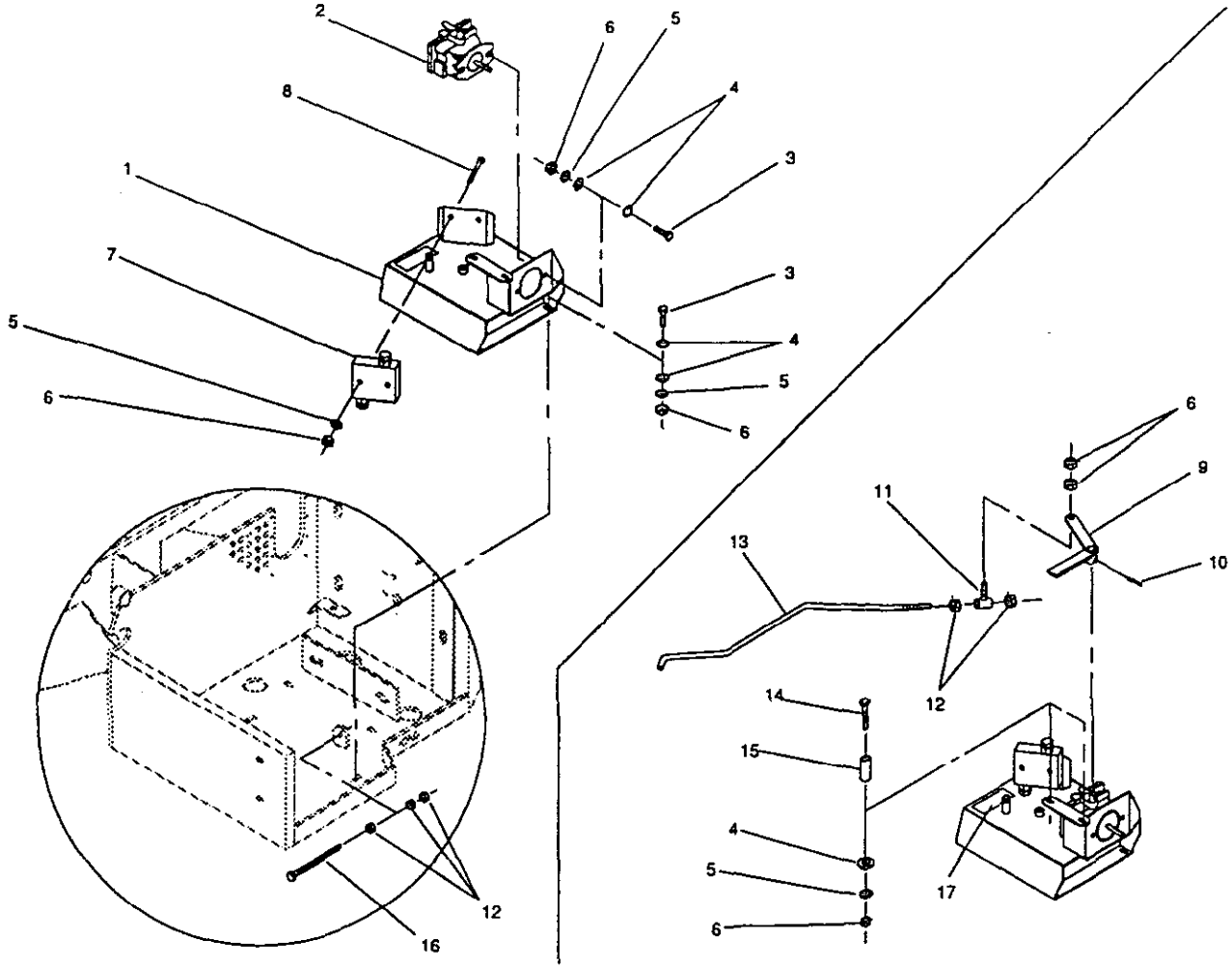

HYDRAULIC OIL TANK ASSEMBLY

182K-007

Ref. No.	Part No.	Description	No. Used
1.	18-205-2401	Hydraulic Oil Tank	1
2.	01-305-0790	Pump	1
*	01-305-0820	Seal Kit	1
3.	01-178-0612	Capscrew - Hex Hd., 3/8" - 16 x 1-1/2"	6
4.	01-166-0600	Flat Washer, 3/8"	14
5.	01-166-0610	Lock Washer, 3/8"	8
6.	01-188-0616	Hex Nut, 3/8" - 16	10
7.	01-308-0840	Crossover Valve	1
8.	01-178-0616	Capscrew - Hex Hd., 3/8" - 16 x 2"	2

Ref. No.	Part No.	Description	No. Used
9.	18-205-2391	Pump Lever	1
10.	01-153-0130	Roll Pin, 1/4" x 2-1/4"	1
11.	18-205-0291	Rod Pivot	1
12.	01-188-0813	Hex Nut, 1/2" - 13	5
13.	18-204-2331	Valve Rod	1
14.	01-178-0614	Capscrew - Hex Hd., 3/8" - 16 x 1-3/4"	2
15.	18-204-2121	Spacer, .875" lg.	2
16.	01-178-0832	Capscrew - Hex Hd. 1/2" - 13 x 4"	1
17.	01-506-0560	Decal - Hydraulic Oil	1

* Not Illustrated

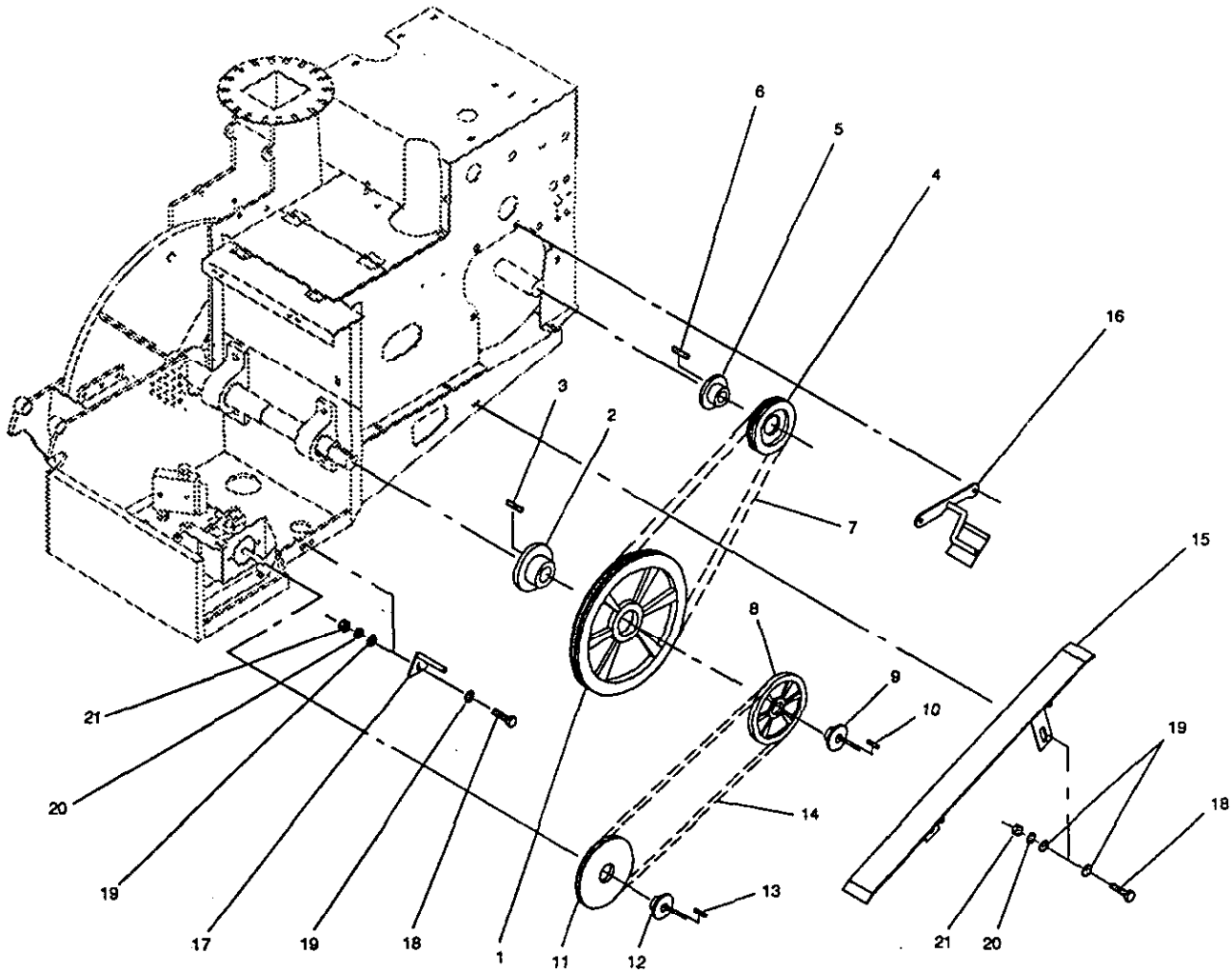

DRIVE BELTS

182K-010

Ref. No.	Part No.	Description	No. Used
1.	01-260-1630	Sheave, 4B154SF	1
2.	01-260-1650	Bushing, 2" SF	1
3.	18-204-2171	Key, 1/2" Sq. x 2"	1
4.	01-260-2060	Sheave, 4B70SK	1
5.	01-260-0710	Bushing, 1-7/16" SK	1
6.	98-404-0441	Key, 3/8" Sq. x 1-3/4"	1
7.	01-264-0880	Belt, 4RBP93	1
8.	01-260-2020	Sheave, AK61H	1
9.	01-260-1660	Bushing, 1-1/4" H	1
10.	---	Key, 1/4" x 3/16" x 1-1/4" (included with bushing)	1
11.	01-260-2010	Sheave, 1TA5.6	1

Ref. No.	Part No.	Description	No. Used
12.	01-260-2000	Bushing, P1 15mm	1
13.	18-204-2961	Key, 5mm Sq. x .750" lg.	1
14.	01-264-0240	Belt, A48	1
15.	18-205-2881	Lower Belt Stop	1
16.	18-205-2871	Top Belt Stop	1
17.	18-205-2211	Bottom Belt Stop	1
18.	01-178-0612	Capscrew - Hex Hd., 3/8" - 16 x 1-1/2"	3
19.	01-166-0600	Flat Washer, 3/8"	6
20.	01-166-0610	Lock Washer, 3/8"	3
21.	01-188-0616	Hex Nut, 3/8" - 16	3

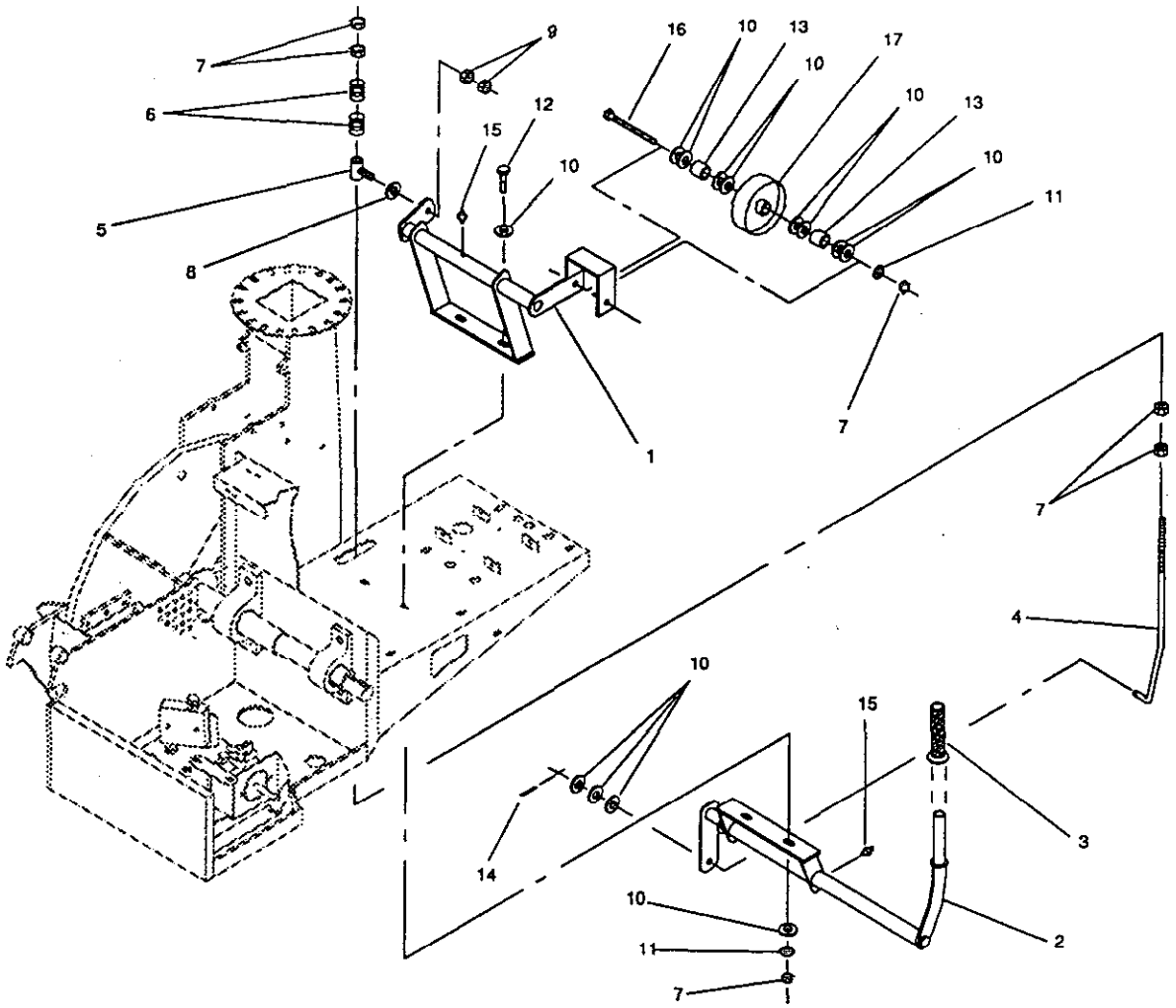

IDLER ASSEMBLY

182K-011

Ref. No.	Part No.	Description	No. Used
1.	18-205-2861	Belt Idler	1
2.	18-205-2851	Idler Handle	1
3.	01-259-0050	Handle Grip	1
4.	18-204-1731	Idler Rod	1
5.	18-205-0291	Rod Pivot	1
6.	01-261-0580	Spring, 1/2" OD x 1-1/4" lg.	2
7.	01-188-0813	Hex Nut, 1/2" - 13	7
8.	01-166-0600	Flat Washer, 3/8"	1
9.	01-188-0616	Hex Nut, 3/8" - 16	2
10.	01-166-0800	Flat Washer, 1/2"	12

Ref. No.	Part No.	Description	No. Used
11.	01-166-0810	Lock Washer, 1/2"	3
12.	01-178-0814	Capscrew - Hex Hd., 1/2" - 13 x 1-3/4"	2
13.	18-204-2181	Idler Spacer	2
14.	01-151-0100	Cotter Pin, 3/16" x 1"	1
15.	01-215-0050	Grease Zerk	2
16.	01-178-0840	Capscrew - Hex Hd., 1/2" - 13 x 5"	1
17.	01-268-0200	Idler Pulley	1

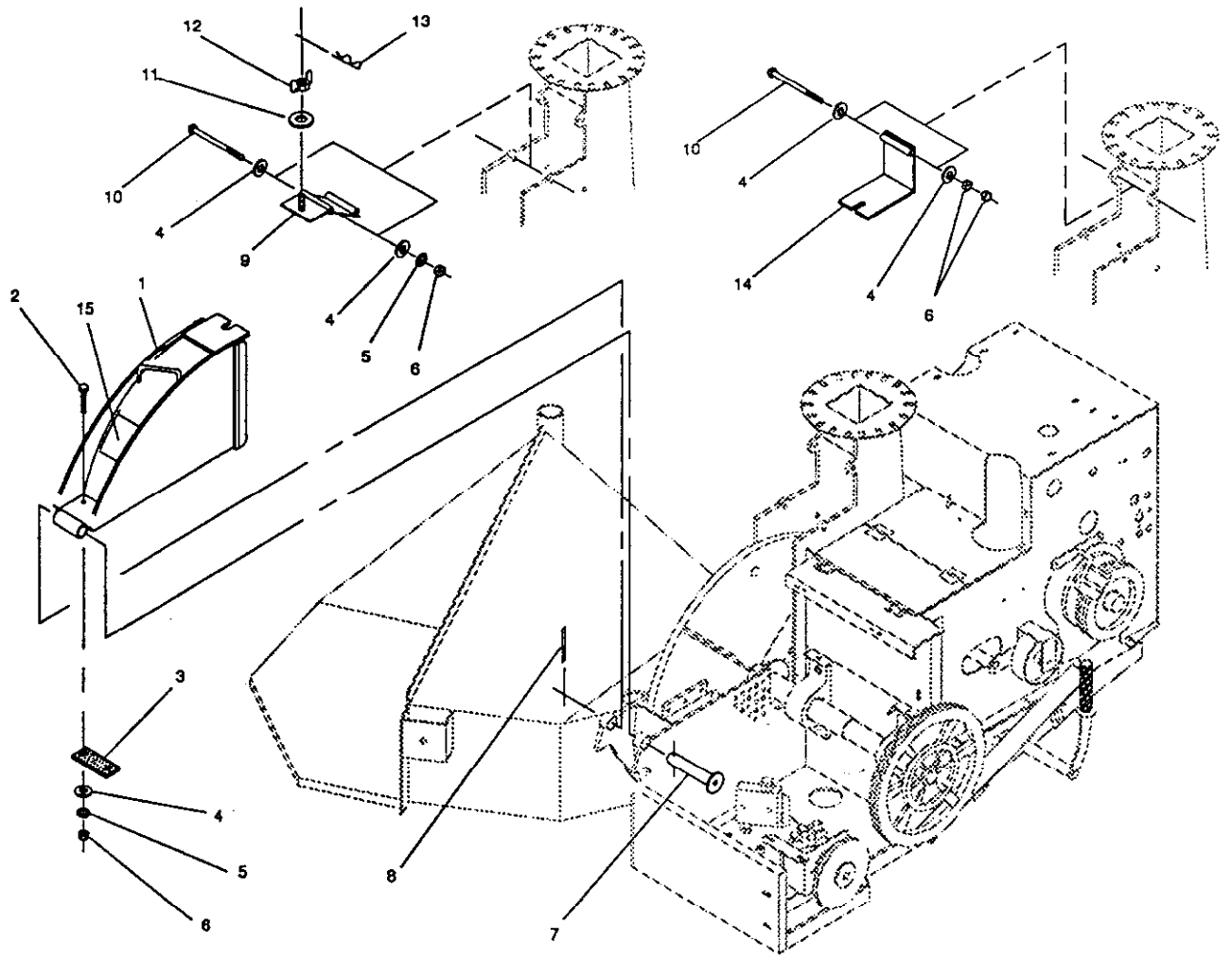

CHIPPER HOOD & CLEANOUT LID

182K-002

Ref. No.	Part No.	Description	No. Used
1.	18-205-0233	Chipper Hood	1
2.	01-178-0612	Capscrew - Hex Hd., 3/8" - 16 x 1-1/2"	2
3.	18-204-1671	Hood Seal, 1/2" Rubber	1
4.	01-166-0600	Flat Washer, 3/8"	8
5.	01-166-0610	Lock Washer, 3/8"	4
6.	01-188-0616	Hex Nut, 3/8" - 16	6
7.	18-205-0301	Hinge Pin	1
8.	01-151-0060	Cotter Pin, 3/16" x 1-1/2"	1

Ref. No.	Part No.	Description	No. Used
9.	18-205-0182	Wrapper Top	1
10.	01-178-0652	Capscrew - Hex Hd., 3/8" - 16 x 6-1/2"	3
11.	01-166-1200	Flat Washer, 3/4"	1
12.	01-192-0290	Wing Nut, 3/4" - 10	1
13.	01-159-0010	Presto Pin, 5/32" x 2-3/4"	1
14.	18-205-0381	Cleanout Lid	1
15.	01-506-0020	Decal - Danger	1

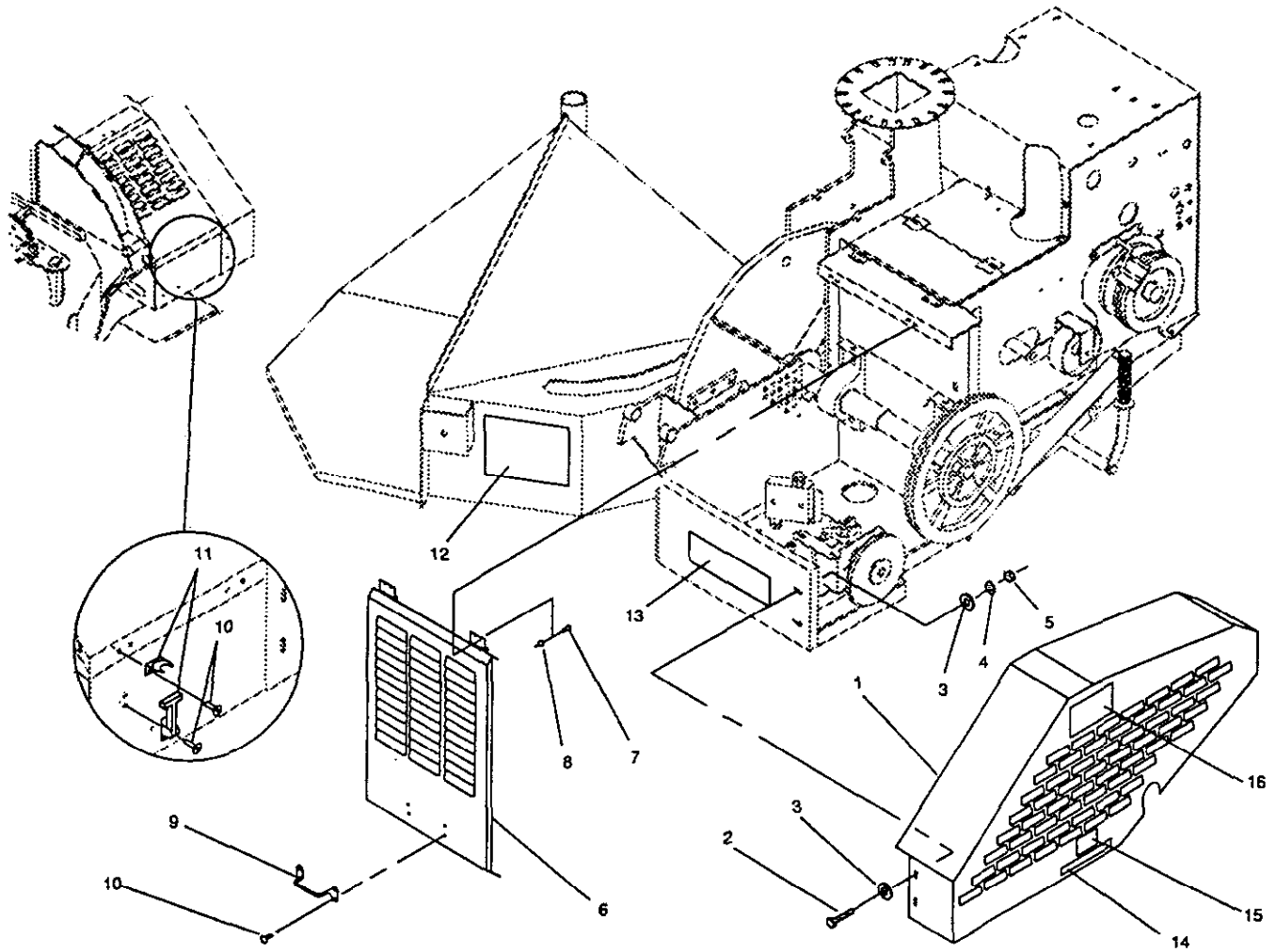

BELT GUARD & LOUVERED COVER

182K-001

Ref. No.	Part No.	Description	No. Used
1.	18-205-2811	Belt Guard	1
2.	01-178-0612	Capscrew - Hex Hd., 3/8" - 16 x 1-1/2"	4
3.	01-166-0600	Flat Washer, 3/8"	16
4.	01-166-0610	Lock Washer, 3/8"	8
5.	01-188-0616	Hex Nut, 3/8" - 16	10
6.	18-205-3011	Louvered Cover	1
7.	01-158-0200	Capscrew - Hex Hd., #10 - 24 x 1/2"	4
8.	01-192-0200	Whiz Nut, #10 - 24	4

Ref. No.	Part No.	Description	No. Used
9.	01-256-0140	Handle	1
10.	01-161-0060	Pop Rivet, 3/16" x 1/2" sm. hd.	12
11.	01-270-1350	Rubber Latch	2
12.	01-506-0260	Decal - Operating Instr.	1
13.	01-506-0700	Decal - Chipper 1820D	1
14.	01-506-1140	Decal - Disengage/Engage	1
15.	01-506-1130	Decal - Before Starting	1
16.	01-506-0500	Decal - Toro	1

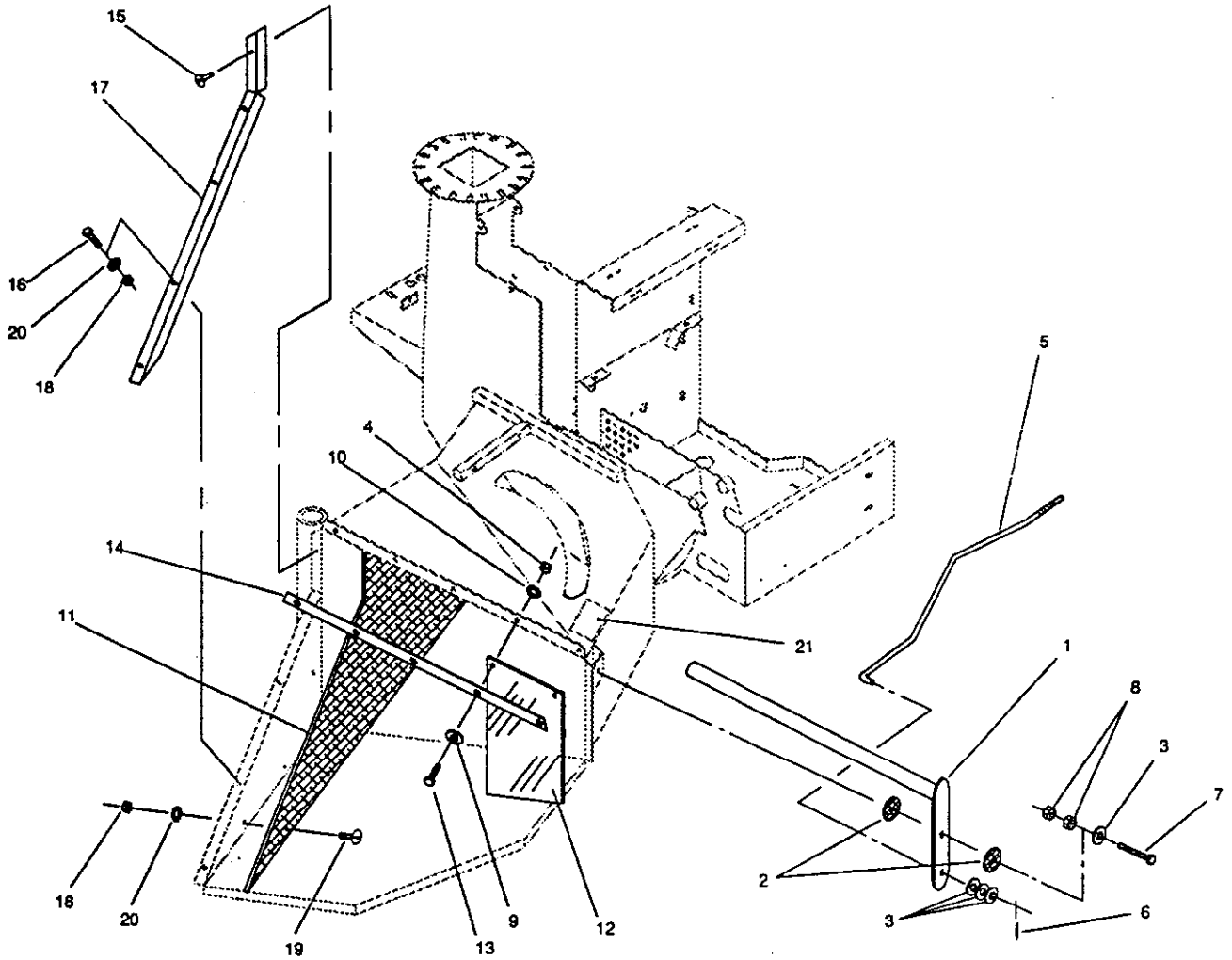

ROLLER LEVER & FEED TABLE

182K-003

Ref. No.	Part No.	Description	No. Used
1.	18-205-0281	Roller Lever	1
2.	18-204-1541	Roller Lever Pad, 1/4" UHMW	2
3.	01-166-0800	Flat Washer, 1/2"	4
4.	01-188-0616	Hex Nut, 3/8" - 16	5
5.	18-204-2331	Valve Rod	1
6.	01-151-0040	Cotter Pin, 1/8" x 1"	1
7.	01-178-0816	Capscrew - Hex Hd., 1/2" x 2"	1
8.	01-191-0813	Jam Nut, 1/2" - 13	2
9.	01-166-0600	Flat Washer, 3/8"	5
10.	01-166-0610	Lock Washer, 3/8"	5
11.	18-204-1061	Side Plate, 1/4" UHMW	1

Ref. No.	Part No.	Description	No. Used
12.	18-204-1481	Feed Guard	4
13.	01-178-0610	Capscrew - Hex Hd., 3/8" - 16 x 1-1/4"	5
14.	18-204-1471	Feed Guard Flat	1
15.	01-161-0020	Pop Rivet, 3/16" x 1/2" lg. hd.	1
16.	01-178-0508	Capscrew - Hex Hd., 5/16" - 18 x 1"	4
17.	18-204-1921	Corner Guard	1
18.	01-188-0518	Hex Nut, 5/16" - 18	16
19.	01-173-0508	Carriage Bolt, 5/16" - 18 x 1"	12
20.	01-166-0510	Lock Washer, 5/16"	16
21.	01-506-0320	Decal - Rev/N/Forward	1

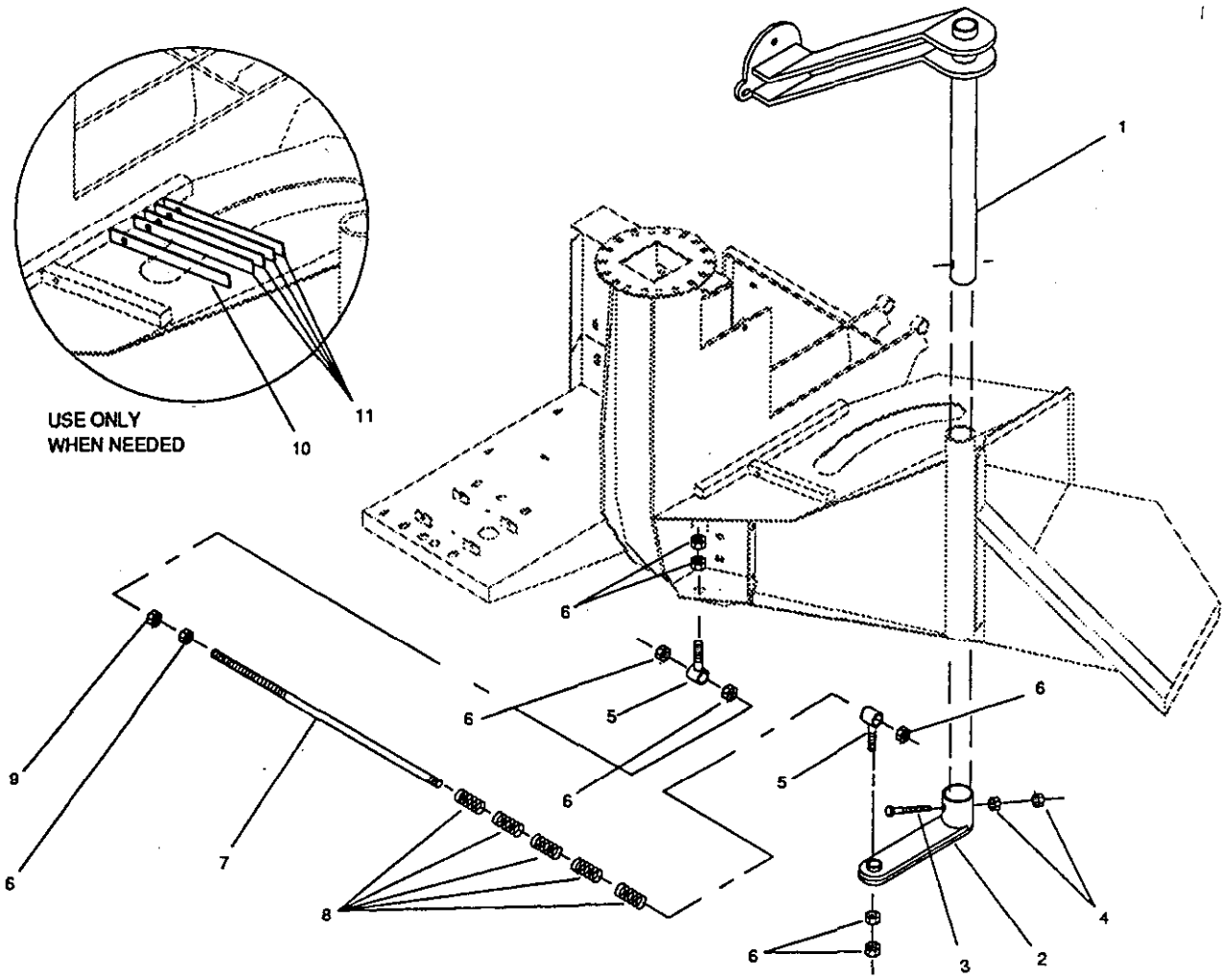

ROLLER PIVOT ARM

182K-005

Ref. No.	Part No.	Description	No. Used
1.	18-205-0212	Roller Pivot Arm	1
2.	18-205-0161	Spring Bracket	1
3.	01-178-0832	Capscrew - Hex Hd., 1/2" - 13 x 4"	1
4.	01-188-0813	Hex Nut, 1/2" - 13	2
5.	18-205-0221	Spring Rod Pivot Bolt	2

Ref. No.	Part No.	Description	No. Used
6.	01-188-1210	Hex Nut, 3/4" - 10	8
7.	18-204-0801	Spring Rod	1
8.	01-261-0400	Spring, 1-1/2" OD x 5" lg.	5
9.	01-191-1210	Jam Nut, 3/4" - 10	1
10.	18-204-1981	Roller Spacer, 16 ga.	1
11.	18-204-1991	Roller Spacer, 10 ga.	4

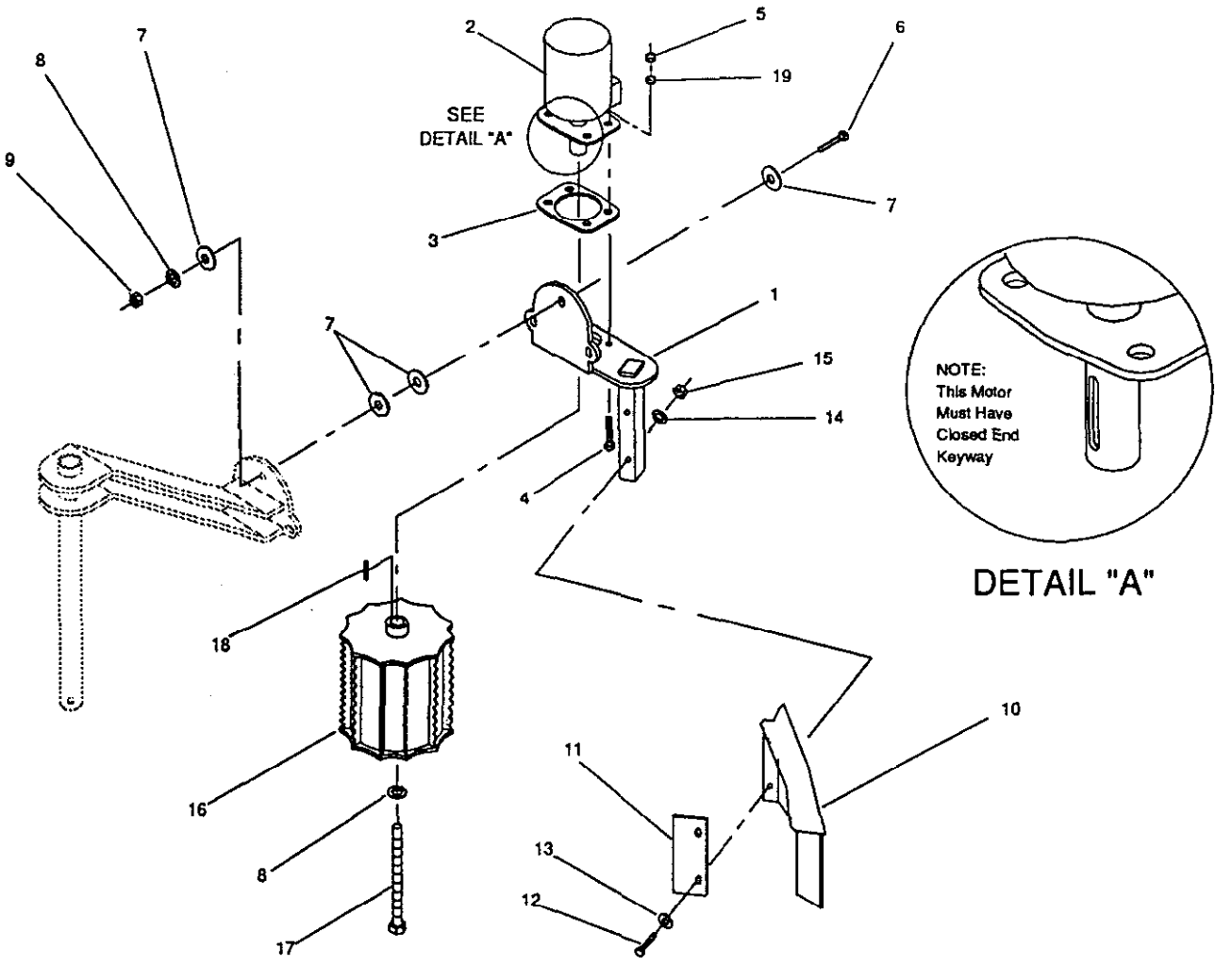

FEED ROLLER

182K-004

Ref. No.	Part No.	Description	No. Used
1.	18-205-0202	Motor Plate	1
2.	01-304-0420	Hydraulic Motor	1
*	01-304-0260	Seal Kit	1
3.	18-204-0461	Roller Motor Spacer	1
4.	01-178-0816	Capscrew - Hex Hd., 1/2" - 13 x 2"	4
5.	01-191-0813	Jam Nut, 1/2" - 13	4
6.	01-178-1020	Capscrew - Hex Hd., 5/8" - 11 x 2-1/2"	3
7.	18-204-0761	Arm Spacer Top	12(Var)
8.	01-166-1010	Lock Washer, 5/8"	4
9.	01-188-1011	Hex Nut, 5/8" - 11	3

Ref. No.	Part No.	Description	No. Used
10.	18-205-0251	Disc Guard	1
11.	18-204-2231	Roller Guard	1
12.	01-178-0618	Capscrew - Hex Hd., 3/8" - 16 x 2-1/4"	2
13.	01-166-0600	Flat Washer, 3/8"	2
14.	01-166-0610	Lock Washer, 3/8"	2
15.	01-188-0616	Hex Nut, 3/8" - 16	2
16.	18-205-0262	Feed Roller	1
17.	18-205-0321	Roller Bolt	1
18.	41-004-5211	Key, 5/16" Sq. x 2-1/4"	1
19.	01-188-0813	Hex Nut, 1/2" - 13	4

* Not Illustrated

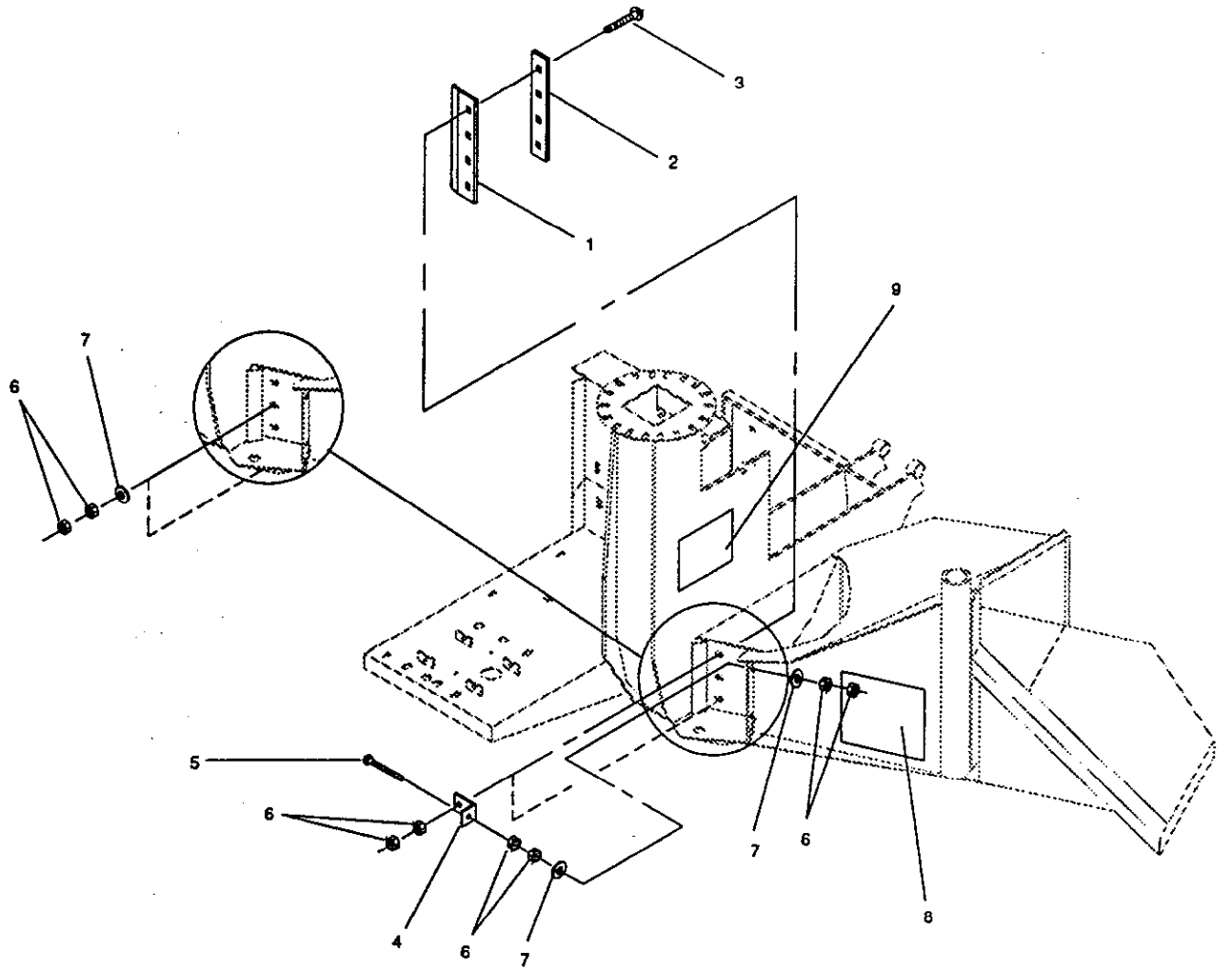

CUTTER BAR ASSEMBLY

182K-006

Ref. No.	Part No.	Description	No. Used
1.	98-604-3481	Cutter Bar	1
2.	18-205-0271	Cutter Bar Spacer	1
3.	01-173-0816	Carriage Bolt, 1/2" - 13 x 2"	4
4.	18-204-1181	Cutter Bar Bracket	2
5.	01-178-0832	Capscrew - Hex Hd., 1/2" - 13 x 4"	2

Ref. No.	Part No.	Description	No. Used
6.	01-188-0813	Hex Nut, 1/2" - 13	16
7.	01-166-0800	Flat Washer, 1/2"	6
8.	01-506-0260	Decal - Operating Instr.	1
9.	01-506-0500	Decal - Toro	1

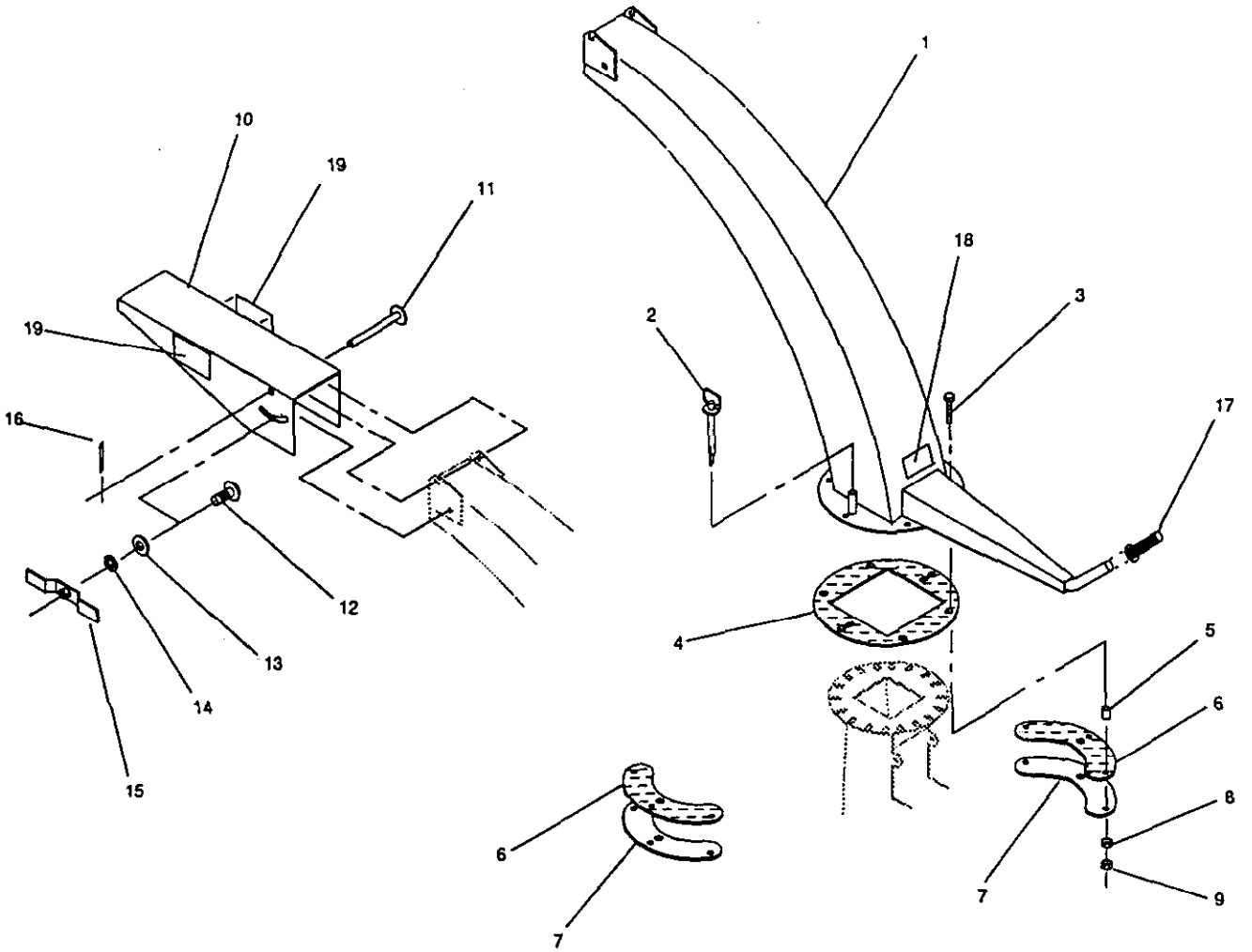

CHUTE ASSEMBLY

182K-013

Ref. No.	Part No.	Description	No. Used
1.	18-205-0193	Chute	1
2.	01-276-0160	Hitch Pin	1
3.	01-178-0816	Capscrew - Hex Hd., 1/2" - 13 x 2"	6
4.	18-204-0591	Chute Flange Spacer, 1/4" UHMW	1
5.	18-204-1271	Directional Spacer	6
6.	18-204-1201	Chute Washer, 1/4" UHMW	2
7.	18-204-1191	Chute Clamp	2
8.	01-188-0813	Hex Nut, 1/2" - 13	6
9.	01-191-0813	Jam Nut, 1/2" - 13	6

Ref. No.	Part No.	Description	No. Used
10.	18-204-1821	Deflector	1
11.	18-205-0361	Deflector Pin	1
12.	01-173-0816	Carriage Bolt, 1/2" - 13 x 2"	1
13.	01-166-0800	Flat Washer, 1/2"	1
14.	01-166-0810	Lock Washer, 1/2"	1
15.	18-205-0311	Wing Nut	1
16.	01-151-0040	Cotter Pin, 1/8" x 1"	1
17.	01-259-0050	Foam Handle	1
18.	01-506-0290	Decal - Danger	1
19.	01-506-0300	Decal - Danger	2

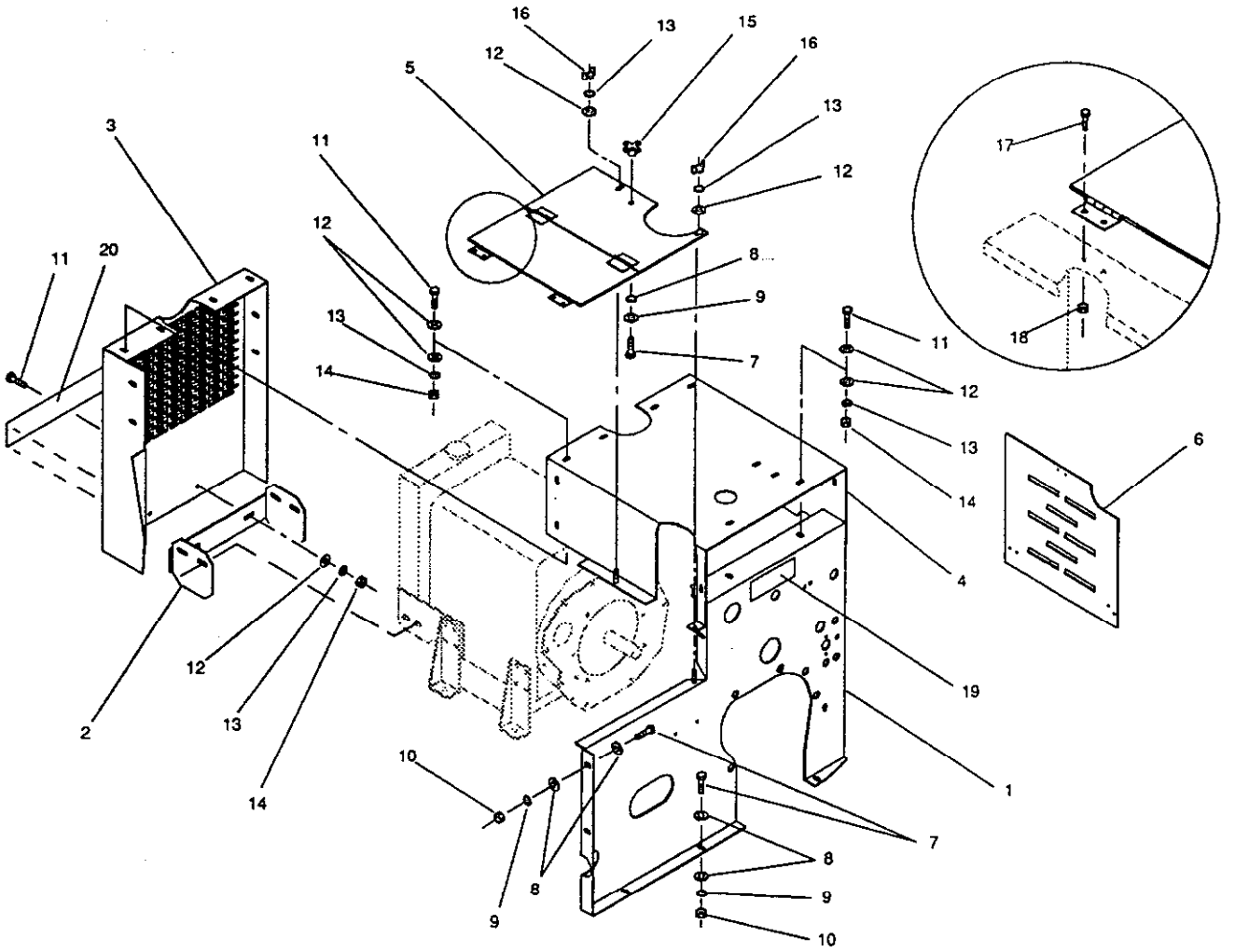

ENGINE COWLING

182K-012

Ref. No.	Part No.	Description	No. Used
1.	18-205-2911	Front Guard	1
2.	18-205-2921	Radiator Cowling Mount	1
3.	18-204-2621	Grill Cowling	1
4.	18-205-2841	Top Cowling	1
5.	18-205-2831	Top Lid	1
6.	18-204-2651	Side Louver	1
7.	01-178-0608	Capscrew - Hex Hd., 3/8" - 16 x 1"	6
8.	01-166-0600	Flat Washer, 3/8"	11
9.	01-166-0610	Lock Washer, 3/8"	6
10.	01-188-0616	Hex Nut, 3/8" - 16	5
11.	01-178-0506	Capscrew - Hex Hd., 5/16" - 18 x 3/4"	15

Ref. No.	Part No.	Description	No. Used
12.	01-166-0500	Flat Washer, 5/16"	30
13.	01-166-0510	Lock Washer, 5/16"	17
14.	01-188-0518	Hex Nut, 5/16" - 18	15
15.	01-257-0010	Knob	1
16.	01-192-0420	Wing Nut, 5/16" - 18	2
17.	01-158-0200	Capscrew - Hex Hd., #10 - 24 x 1/2"	4
18.	01-192-0200	Whiz Nut, #10 - 24	4
19.	01-506-0030	Decal - Danger	1
20.	01-506-0700	Decal - Chipper 1820D	1

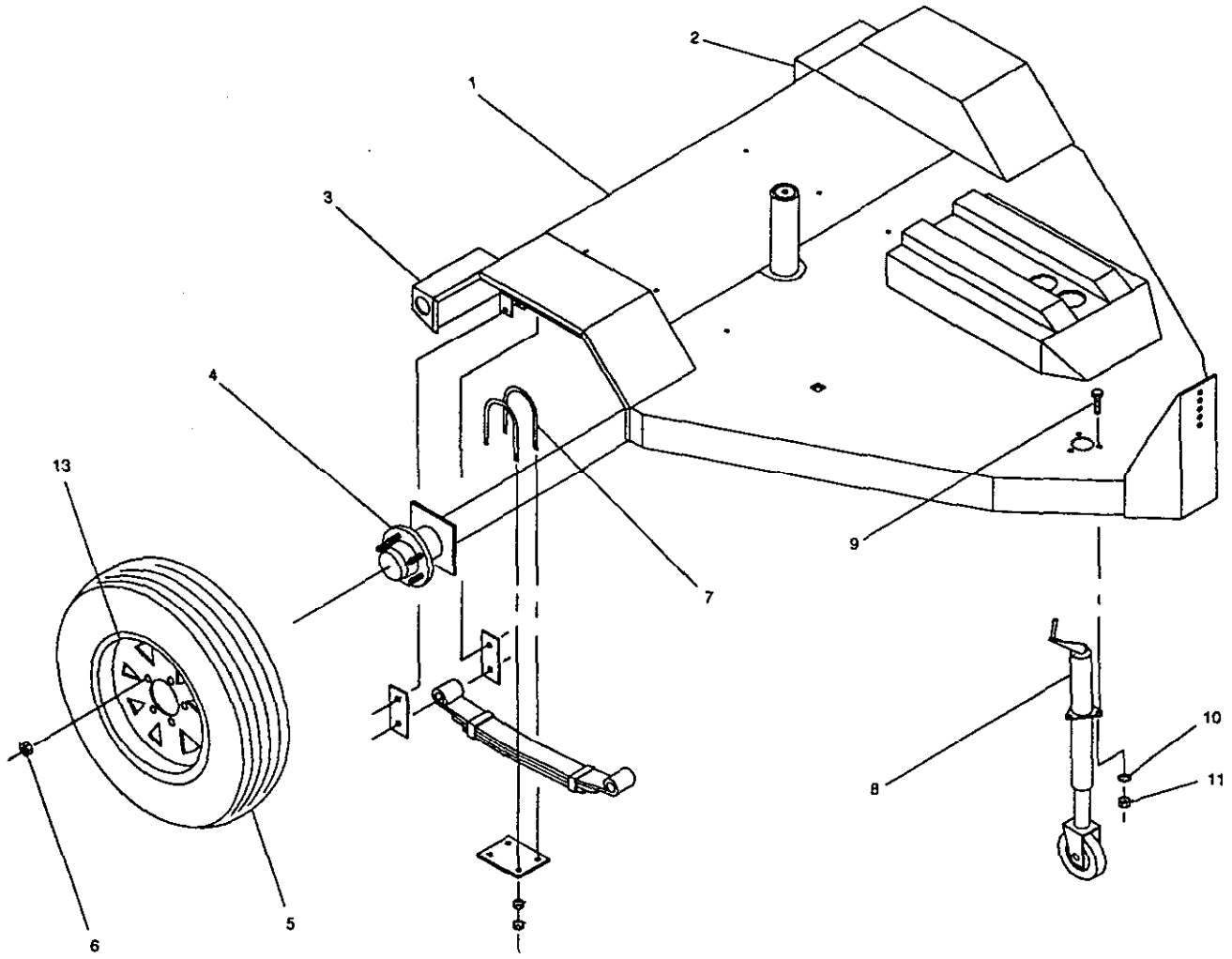

TRAILER ASSEMBLY

182K-014

Ref. No.	Part No.	Description	No. Used
1.	18-205-2823	Trailer Main Frame	1
2.	01-607-0020	Tail Light, L.H.	1
3.	01-607-0010	Tail Light, R.H.	1
4.	01-285-0610	Axle	1
5.	01-269-1510	Tire, B-78-13 6 Ply	2
6.	01-269-0300	Lug Nut, 1/2" - 20	10
7.	01-285-0340	Hanger Kit	1
*	01-285-0260	Attaching Parts Kit	1

Ref. No.	Part No.	Description	No. Used
8.	18-205-3001	Jack	1
9.	01-178-0812	Capscrew - Hex Hd., 1/2" - 13 x 1-1/2"	3
10.	01-166-0810	Lock Washer, 1/2"	3
11.	01-188-0813	Hex Nut, 1/2" - 13	3
12.	01-506-0540	Decal - No Riders	2
13.	01-269-1520	Wheel	2

* Not Illustrated

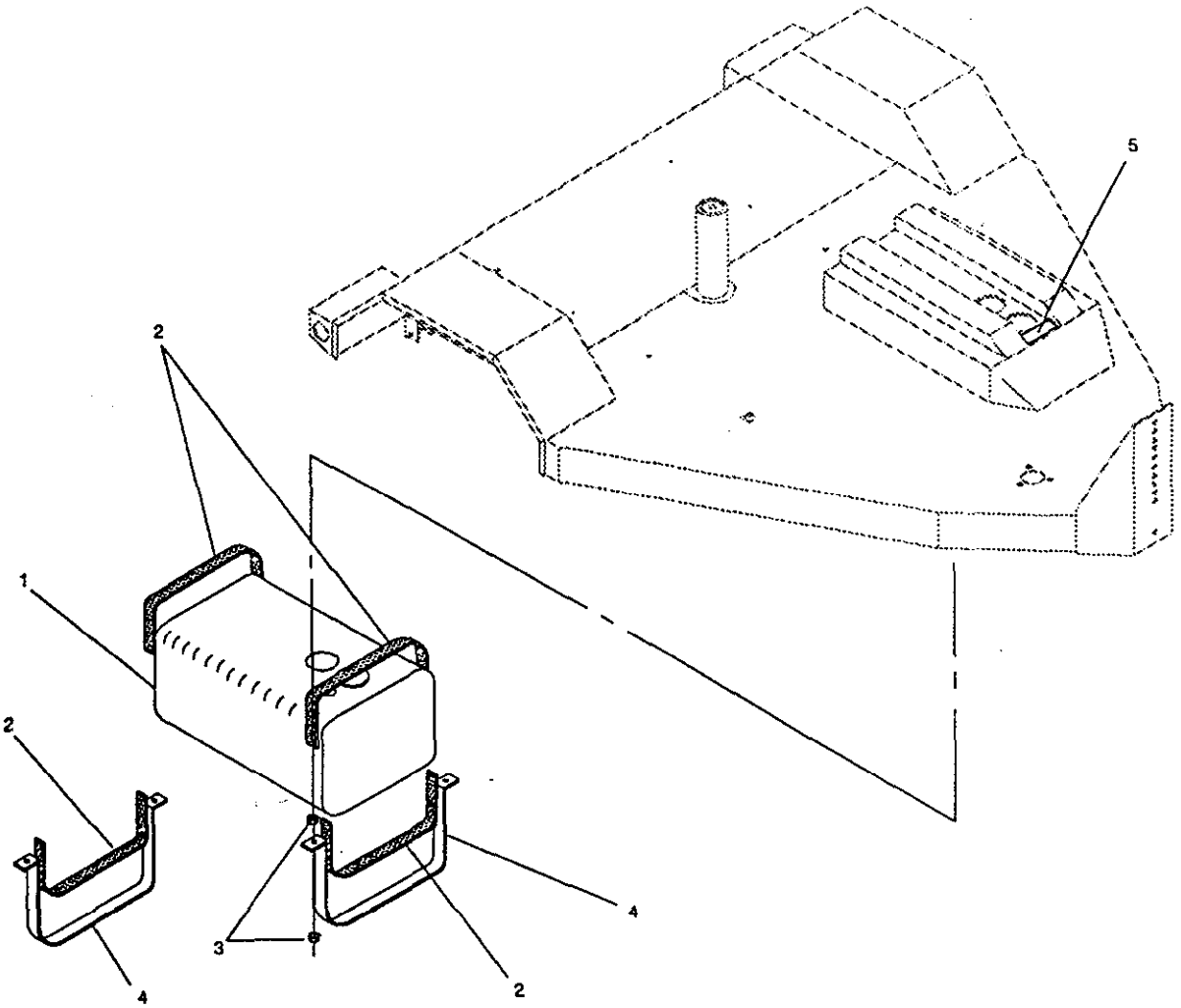

FUEL TANK ASSEMBLY

182K-015

Ref. No.	Part No.	Description	No. Used
1.	01-280-0220	Gas Tank, 12 Gal.	1
2.	18-204-1781	Gas Tank Strap, 1/8" Rubber	4
3.	01-188-0616	Hex Nut, 3/8" - 16	9

Ref. No.	Part No.	Description	No. Used
4.	18-204-1121	Gas Tank Strap	2
5.	01-506-0960	Decal - Diesel Only	1

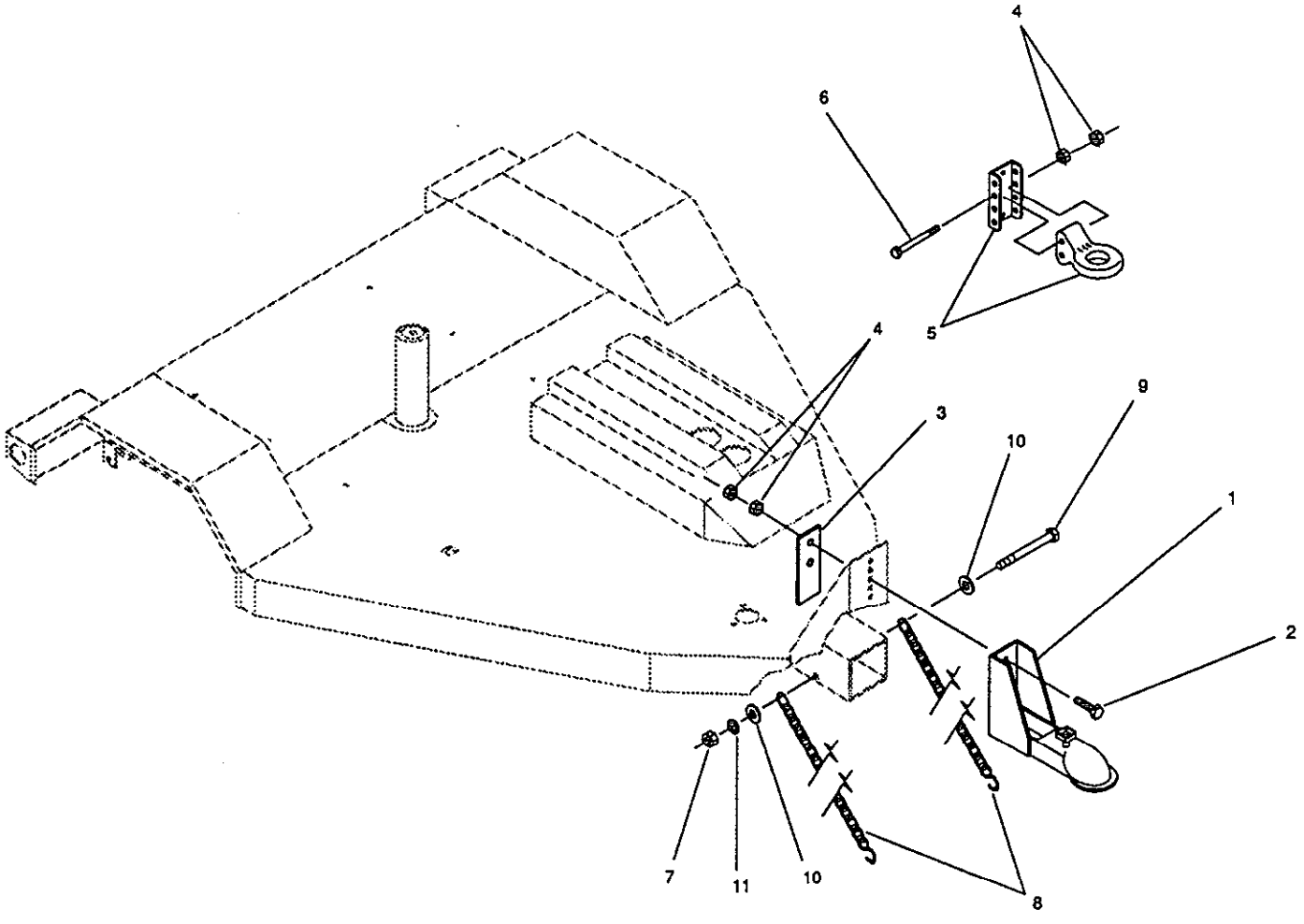

HITCH ASSEMBLY

182K-016

Ref. No.	Part No.	Description	No. Used
1.	31-005-0172	Hitch	1
2.	01-178-1020	Capscrew - Hex Hd., 5/8" - 11 x 2-1/2"	2
3.	31-004-0941	Hitch Bracket	1
4.	01-188-1011	Hex Nut, 5/8" - 11	8
5.	02-276-0100	Pintle Hitch	1
6.	01-178-1040	Capscrew - Hex Hd., 5/8" - 11 x 5"	2

Ref. No.	Part No.	Description	No. Used
7.	01-188-0616	Hex Nut, 3/8" - 16	1
8.	01-251-0570	Safety Chain	2
9.	01-178-0644	Capscrew - Hex Hd., 3/8" - 16 x 5-1/2"	1
10.	01-166-0600	Flat Washer, 3/8"	2
11.	01-166-0610	Lock Washer, 3/8"	1

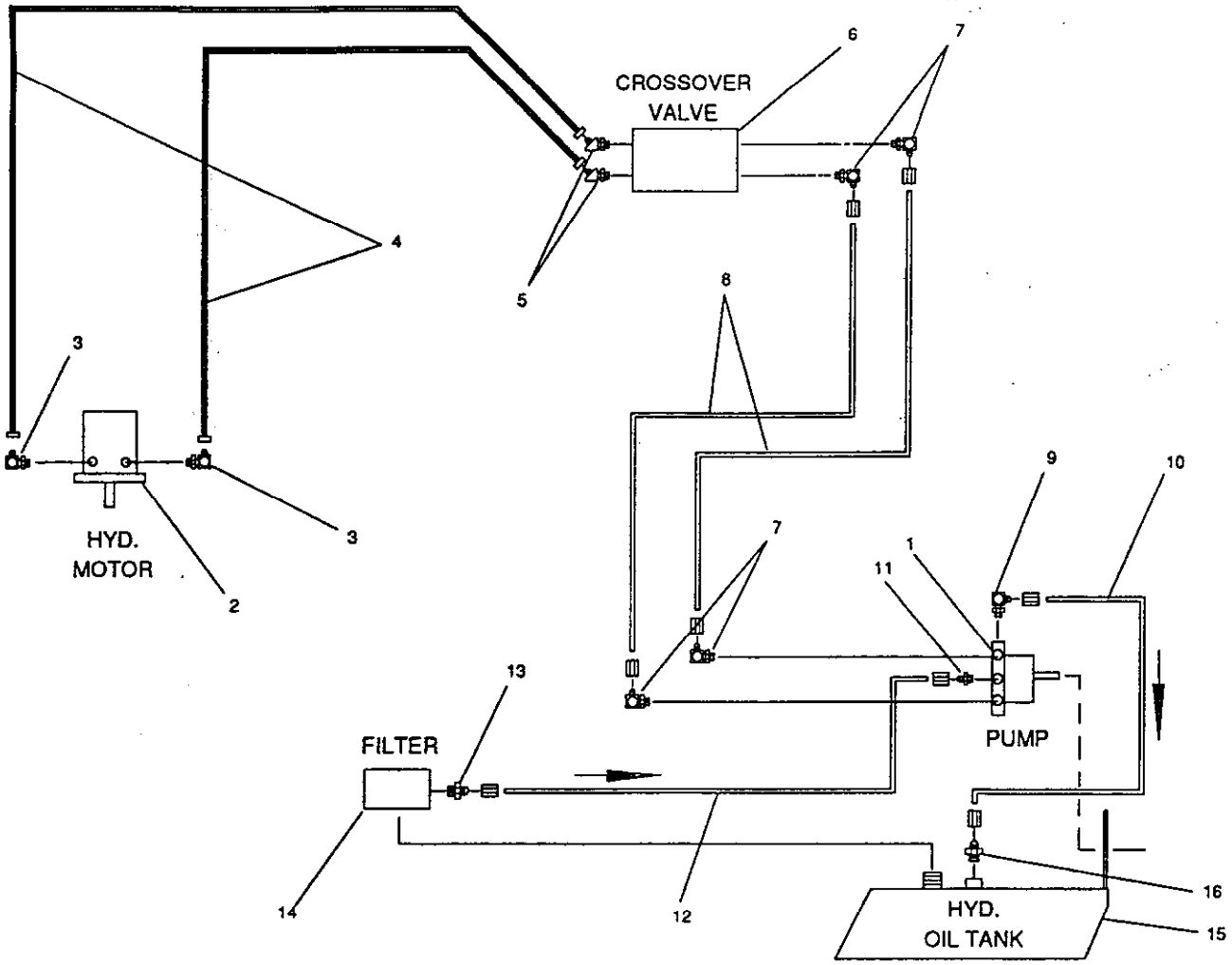

HYDRAULIC SCHEMATIC

182K-018

Ref. No.	Part No.	Description	No. Used
1.	01-305-0790	Pump	1
2.	01-304-0420	Hydraulic Motor	1
*	01-304-0260	Seal Kit	1
3.	01-201-1520	Fitting, 6801-6-10	2
4.	01-312-1610	Hyd. Hose, 3/8" x 60	2
5.	01-201-2240	Fitting, 6802-6-8	2
6.	01-308-0840	Crossover Valve	1
7.	01-201-2290	Fitting, 3/4" - 16 O-ring x 3/8" tube	4
8.	18-204-2381	Steel Tube, 3/8" x 10"	2
9.	01-201-2270	Fitting, 9/16" - 18 O-ring x 3/8" tube	1

Ref. No.	Part No.	Description	No. Used
10.	18-204-2371	Steel Tube, 3/8" x 9"	1
11.	01-201-2340	Fitting, 7/16" - 20 O-ring x 1/4" tube	1
12.	18-204-2361	Steel Tube, 1/4" x 5"	1
13.	01-201-2260	Fitting, 3/8" NPT Male x 1/4" tube	1
14.	01-317-0070	Filter	1
*	01-317-0100	Element & Seal Kit	1
15.	18-205-2401	Hyd. Oil Tank	1
16.	01-201-2280	Fitting, 3/8" NPT Male x 3/8" tube	1

* Not Illustrated

PART NUMBER INDEX

Part No.	Description	Pg. No.	Ref. No.	Qty.
	Key - Rect.	6	10	1
01-113-0160	Bearing	3	10	1
01-113-0200	Bearing	3	6	1
01-151-0040	Cotter Pin	10	6	1
01-151-0040	Cotter Pin	14	16	1
01-151-0060	Cotter Pin	8	8	1
01-151-0100	Cotter Pin	7	14	1
01-153-0130	Roll Pin	5	10	1
01-158-0200	Capscrew - Hex Hd.	15	17	4
01-158-0200	Capscrew - Hex Hd.	9	7	4
01-158-1150	Capscrew - Flat Hd. Socket	3	2	6
01-159-0010	Presto Pin	8	13	1
01-161-0020	Pop Rivet	10	15	1
01-161-0060	Pop Rivet	9	10	12
01-166-0500	Flat Washer	15	12	30
01-166-0510	Lock Washer	10	20	16
01-166-0510	Lock Washer	15	13	17
01-166-0600	Flat Washer	10	9	5
01-166-0600	Flat Washer	12	13	2
01-166-0600	Flat Washer	15	8	11
01-166-0600	Flat Washer	18	10	2
01-166-0600	Flat Washer	2	7	6
01-166-0600	Flat Washer	4	16	4
01-166-0600	Flat Washer	5	4	14
01-166-0600	Flat Washer	6	19	6
01-166-0600	Flat Washer	7	8	1
01-166-0600	Flat Washer	8	4	8
01-166-0600	Flat Washer	9	3	16
01-166-0610	Lock Washer	10	10	5
01-166-0610	Lock Washer	12	14	2
01-166-0610	Lock Washer	15	9	6
01-166-0610	Lock Washer	18	11	1
01-166-0610	Lock Washer	2	8	6
01-166-0610	Lock Washer	5	5	8
01-166-0610	Lock Washer	6	20	3
01-166-0610	Lock Washer	8	5	4
01-166-0610	Lock Washer	9	4	8
01-166-0800	Flat Washer	10	3	4
01-166-0800	Flat Washer	13	7	6
01-166-0800	Flat Washer	14	13	1
01-166-0800	Flat Washer	7	10	12
01-166-0810	Lock Washer	14	14	1
01-166-0810	Lock Washer	16	10	3
01-166-0810	Lock Washer	2	4	1
01-166-0810	Lock Washer	7	11	3
01-166-1000	Flat Washer	3	12	4
01-166-1000	Flat Washer	4	9	4
01-166-1010	Lock Washer	12	8	4
01-166-1010	Lock Washer	4	10	4
01-166-1200	Flat Washer	3	8	4
01-166-1200	Flat Washer	8	11	1
01-173-0508	Carriage Bolt	10	19	12
01-173-0816	Carriage Bolt	13	3	4
01-173-0816	Carriage Bolt	14	12	1
01-173-1220	Carriage Bolt	2	11	1
01-178-0502	Capscrew - Hex Hd.	4	13	2
01-178-0506	Capscrew - Hex Hd.	15	11	15
01-178-0508	Capscrew - Hex Hd.	10	16	4
01-178-0608	Capscrew - Hex Hd.	15	7	6
01-178-0610	Capscrew - Hex Hd.	10	13	5
01-178-0612	Capscrew - Hex Hd.	4	7	16
01-178-0612	Capscrew - Hex Hd.	5	3	6
01-178-0612	Capscrew - Hex Hd.	6	18	3
01-178-0612	Capscrew - Hex Hd.	8	2	2
01-178-0612	Capscrew - Hex Hd.	9	2	4
01-178-0614	Capscrew - Hex Hd.	2	6	6
01-178-0614	Capscrew - Hex Hd.	5	14	2
01-178-0616	Capscrew - Hex Hd.	5	8	2
01-178-0618	Capscrew - Hex Hd.	12	12	2
01-178-0620	Capscrew - Hex Hd.	4	4	4
01-178-0644	Capscrew - Hex Hd.	18	9	1
01-178-0652	Capscrew - Hex Hd.	8	10	3
01-178-0812	Capscrew - Hex Hd.	16	9	3
01-178-0812	Capscrew - Hex Hd.	2	5	1
01-178-0814	Capscrew - Hex Hd.	7	12	2
01-178-0816	Capscrew - Hex Hd.	10	7	1
01-178-0816	Capscrew - Hex Hd.	12	4	4
01-178-0816	Capscrew - Hex Hd.	14	3	6
01-178-0816	Capscrew - Hex Hd.	3	16	3
01-178-0832	Capscrew - Hex Hd.	11	3	1
01-178-0832	Capscrew - Hex Hd.	13	5	2
01-178-0832	Capscrew - Hex Hd.	5	16	1
01-178-0840	Capscrew - Hex Hd.	7	16	1
01-178-1016	Capscrew - Hex Hd.	4	8	4
01-178-1020	Capscrew - Hex Hd.	12	6	3
01-178-1020	Capscrew - Hex Hd.	18	2	2
01-178-1024	Capscrew - Hex Hd.	3	11	2
01-178-1040	Capscrew - Hex Hd.	18	6	2
01-178-1232	Capscrew - Hex Hd.	3	7	2
01-188-0518	Hex Nut	10	18	16
01-188-0518	Hex Nut	15	14	15
01-188-0616	Hex Nut	10	4	5
01-188-0616	Hex Nut	12	15	2
01-188-0616	Hex Nut	15	10	5
01-188-0616	Hex Nut	17	3	9
01-188-0616	Hex Nut	18	7	1
01-188-0616	Hex Nut	2	9	6
01-188-0616	Hex Nut	4	15	12
01-188-0616	Hex Nut	5	6	10
01-188-0616	Hex Nut	6	21	3
01-188-0616	Hex Nut	7	9	2
01-188-0616	Hex Nut	8	6	6
01-188-0616	Hex Nut	9	5	10
01-188-0813	Hex Nut	11	4	2
01-188-0813	Hex Nut	12	19	4
01-188-0813	Hex Nut	13	6	16
01-188-0813	Hex Nut	14	8	6
01-188-0813	Hex Nut	16	11	3
01-188-0813	Hex Nut	3	5	18
01-188-0813	Hex Nut	5	12	5
01-188-0813	Hex Nut	7	7	7
01-188-1011	Hex Nut	12	9	3
01-188-1011	Hex Nut	18	4	8
01-188-1011	Hex Nut	3	13	4
01-188-1011	Hex Nut	4	11	4
01-188-1210	Hex Nut	11	6	8
01-188-1210	Hex Nut	2	14	1
01-188-1210	Hex Nut	3	9	4
01-191-0813	Jam Nut	10	8	2
01-191-0813	Jam Nut	12	5	4
01-191-0813	Jam Nut	14	9	6
01-191-1210	Jam Nut	11	9	1
01-191-1210	Jam Nut	2	15	1
01-192-0200	Whiz Nut	15	18	4
01-192-0200	Whiz Nut	9	8	4
01-192-0290	Wing Nut	8	12	1
01-192-0420	Wing Nut	15	16	2
01-201-1520	Fitting	19	3	2

* Not Illustrated

PART NUMBER INDEX (Continued)

Part No.	Description	Pg. No.	Ref. No.	Qty.
01-201-2240	Fitting	19	5	2
01-201-2260	Fitting	19	13	1
01-201-2270	Fitting	19	9	1
01-201-2280	Fitting	19	16	1
01-201-2290	Fitting	19	7	4
01-201-2340	Fitting	19	11	1
01-215-0050	Grease Zerk	7	15	2
01-251-0570	Safety Chain	18	8	2
01-256-0140	Handle	9	9	1
01-256-0190	Lever	2	13	1
01-257-0010	Knob	15	15	1
01-259-0050	Foam Handle	14	17	1
01-259-0050	Handle Grip	7	3	1
01-260-0710	Bushing	6	5	1
01-260-1630	Sheave	6	1	1
01-260-1650	Bushing	6	2	1
01-260-1660	Bushing	6	9	1
01-260-2000	Bushing	6	12	1
01-260-2010	Sheave	6	11	1
01-260-2020	Sheave	6	8	1
01-260-2060	Sheave	6	4	1
01-261-0400	Spring	11	8	5
01-261-0580	Spring	7	6	2
01-264-0240	Belt	6	14	1
01-264-0880	Belt	6	7	1
01-268-0200	Idler Pulley	7	17	1
01-269-0300	Lug Nut	16	6	10
01-269-1510	Tire	16	5	2
01-269-1520	Wheel	16	13	2
01-270-1350	Rubber Latch	9	11	2
01-270-3370	Engine	4	1	1
01-276-0160	Hitch Pin	14	2	1
01-280-0220	Gas Tank	17	1	1
01-283-0320	Blade	3	3	2
01-285-0260	Attaching Parts Kit	16	*	1
01-285-0340	Hanger Kit	16	7	1
01-285-0610	Axle	16	4	1
01-304-0260	Seal Kit	12	*	1
01-304-0260	Seal Kit	19	*	1
01-304-0420	Hydraulic Motor	12	2	1
01-304-0420	Hydraulic Motor	19	2	1
01-305-0790	Pump	19	1	1
01-305-0790	Pump	5	2	1
01-305-0820	Seal Kit	5	*	1
01-308-0840	Crossover Valve	19	6	1
01-308-0840	Crossover Valve	5	7	1
01-312-1610	Hyd. Hose	19	4	2
01-317-0070	Filter	19	14	1
01-317-0100	Element & Seal Kit	19	*	1
01-506-0020	Decal - Danger	8	15	1
01-506-0030	Decal - Danger	15	19	1
01-506-0260	Decal - Operating Instr.	13	8	1
01-506-0260	Decal - Operating Instr.	9	12	1
01-506-0290	Decal - Danger	14	18	1
01-506-0300	Decal - Danger	14	19	2
01-506-0320	Decal - Reverse/N/Forward	10	21	1
01-506-0500	Decal - Toro	9	16	1
01-506-0500	Decal - Toro	13	9	1
01-506-0540	Decal - No Riders	16	12	2
01-506-0560	Decal - Hydraulic Oil	5	17	1
01-506-0700	Decal - Chipper 1820D	9	13	1
01-506-0700	Decal - Chipper 1820D	15	20	1
01-506-0960	Decal - Diesel Only	17	5	1
01-506-1130	Decal - Before Starting	9	15	1
01-506-1140	Decal - Disengage/Engage	9	14	1
01-607-0010	Tail Light-R.H.	16	3	1
01-607-0020	Tail Light-L.H.	16	2	1
02-276-0100	Pintle Hitch	18	5	1
18-204-0451	Pivot Base	2	2	2
18-204-0461	Roller Motor Spacer	12	3	1
18-204-0591	Chute Flange Spacer	14	4	1
18-204-0641	Rotate Stop	2	10	1
18-204-0761	Arm Spacer Top	12	7	12
18-204-0801	Spring Rod	11	7	1
18-204-1061	Side Plate	10	11	1
18-204-1121	Gas Tank Strap	17	4	2
18-204-1181	Cutter Bar Bracket	13	4	2
18-204-1191	Chute Clamp	14	7	2
18-204-1201	Chute Washer	14	6	2
18-204-1271	Directional Spacer	14	5	6
18-204-1471	Feed Guard Flat	10	14	1
18-204-1481	Feed Guard	10	12	4
18-204-1541	Roller Lever Pad	10	2	2
18-204-1671	Hood Seal	8	3	1
18-204-1731	Idler Rod	7	4	1
18-204-1781	Gas Tank Strap	17	2	4
18-204-1821	Deflector	14	10	1
18-204-1921	Corner Guard	10	17	1
18-204-1961	Bearing Spacer	3	14	1
18-204-1971	Bearing Spacer	3	15	1
18-204-1981	Roller Spacer	11	10	1
18-204-1991	Roller Spacer	11	11	4
18-204-2121	Spacer	5	15	2
18-204-2161	Rotate Washer	2	12	1
18-204-2171	Key - Sq.	6	3	1
18-204-2181	Idler Spacer	7	13	2
18-204-2231	Roller Guard	12	11	1
18-204-2331	Valve Rod	10	5	1
18-204-2331	Valve Rod	5	13	1
18-204-2361	Steel Tube	19	12	1
18-204-2371	Steel Tube	19	10	1
18-204-2381	Steel Tube	19	8	2
18-204-2621	Grill Cowling	15	3	1
18-204-2651	Side Louver	15	6	1
18-204-2731	Motor Mount Spacer	4	3	2
18-204-2751	Motor Mount Cushion	4	5	8
18-204-2761	Throttle Linkage Mount	4	12	1
18-204-2961	Key - Sq.	6	13	1
18-204-3021	Small Bearing Spacer	3	18	1
18-204-3031	Large Bearing Spacer	3	17	1
18-205-0123	Chipper Disc	3	1	1
18-205-0161	Spring Bracket	11	2	1
18-205-0171	Pivot End Cap	2	3	1
18-205-0182	Wrapper Top	8	9	1
18-205-0193	Chute	14	1	1
18-205-0202	Motor Plate	12	1	1
18-205-0212	Roller Pivot Arm	11	1	1
18-205-0221	Spring Rod Pivot Bolt	11	5	2
18-205-0233	Chipper Hood	8	1	1
18-205-0251	Disc Guard	12	10	1
18-205-0262	Feed Roller	12	16	1
18-205-0271	Cutter Bar Spacer	13	2	1
18-205-0281	Roller Lever	10	1	1
18-205-0291	Rod Pivot	5	11	1
18-205-0291	Rod Pivot	7	5	1
18-205-0301	Hinge Pin	8	7	1

* Not Illustrated

PART NUMBER INDEX (Continued)

Part No.	Description	Pg. No.	Ref. No.	Qty.
18-205-0311	Wing Nut	14	15	1
18-205-0321	Roller Bolt	12	17	1
18-205-0361	Deflector Pin	14	11	1
18-205-0381	Clean Out Lid	8	14	1
18-205-2211	Bottom Belt Stop	6	17	1
18-205-2391	Pump Lever	5	9	1
18-205-2401	Hydraulic Oil Tank	19	15	1
18-205-2401	Hydraulic Oil Tank	5	1	1
18-205-2803	Chipper Main Frame	2	1	1
18-205-2811	Belt Guard	9	1	1
18-205-2823	Trailer Main Frame	16	1	1
18-205-2831	Top Lid	15	5	1
18-205-2841	Top Cowling	15	4	1
18-205-2851	Idler Handle	7	2	1
18-205-2861	Belt Idler	7	1	1
18-205-2871	Top Belt Stop	6	16	1
18-205-2881	Lower Belt Stop	6	15	1
18-205-2891	Motor Mount - LH	4	6	2
18-205-2901	Motor Mount - RH	4	2	2
18-205-2911	Front Guard	15	1	1
18-205-2921	Radiator Cowling Mount	15	2	1
18-205-3001	Jack	16	8	1
18-205-3011	Louvered Cover	9	6	1
31-004-0941	Hitch Bracket	18	3	1
31-005-0172	Hitch	18	1	1
41-004-5211	Key - Sq.	12	18	1
48-004-3831	Battery Hold Down	4	14	1
98-404-0441	Key - Sq.	6	6	1
98-604-3481	Cutter Bar	13	1	1
98-604-3781	Blade Spacer	3	4	2
98-604-3791	Blade Spacer	3	*	4

* Not Illustrated

PRODUCT CHANGES

In an effort to make improvements available to TORO owners as quickly as possible minor changes are incorporated into Toro's products from time to time that do not become immediately shown in the Parts Catalog. If such a change has been made in your unit which is not reflected in your manual see your TORO Distributor or an Authorized Service Dealer for information and part numbers.

IDENTIFICATION & ORDERING

MODEL AND NUMBERS

The COMMERCIAL CHIPPER 1820D has two identification numbers; a model number and a serial number. The two numbers are stamped on a plate which is located on the chipper housing. In any correspondence concerning the 1820D, supply model and serial numbers to assure that correct information and replacement parts are obtained.

To order replacement parts from your TORO Distributor or an Authorized Service Dealer, supply the following information:

1. Model and serial number of the 1820D.
2. Part number description and the quantity of part (s) desired.

NOTE: Do not order by reference number if a parts catalog is being used: use the PART NUMBER.

TABLE OF CONTENTS

Description	Page	Description	Page
Main Frame Mounting	2	Feed Roller	12
Chipper Disc Assembly	3	Cutter Bar	13
Engine Mounting	4	Chute Assembly	14
Hydraulic Oil Tank Assembly	5	Engine Cowling	15
Drive Belts	6	Trailer Assembly	16
Idler Assembly	7	Fuel Tank Assembly	17
Chipper Hood & Cleanout Lid	8	Hitch Assembly	18
Belt Guard & Louvered Cover	9	Hydraulic Schematic	19
Roller Lever & Feed Table	10	Part Number Index	20 - 22
Roller Pivot Arm	11		

MAINTENANCE RECORD

Date								