FORM NO. 01-505-1080.2

TORO®

MODEL NO. 44575 - 30101 & UP

PARTS CATALOG

COMMERCIAL CHIPPER 1820D

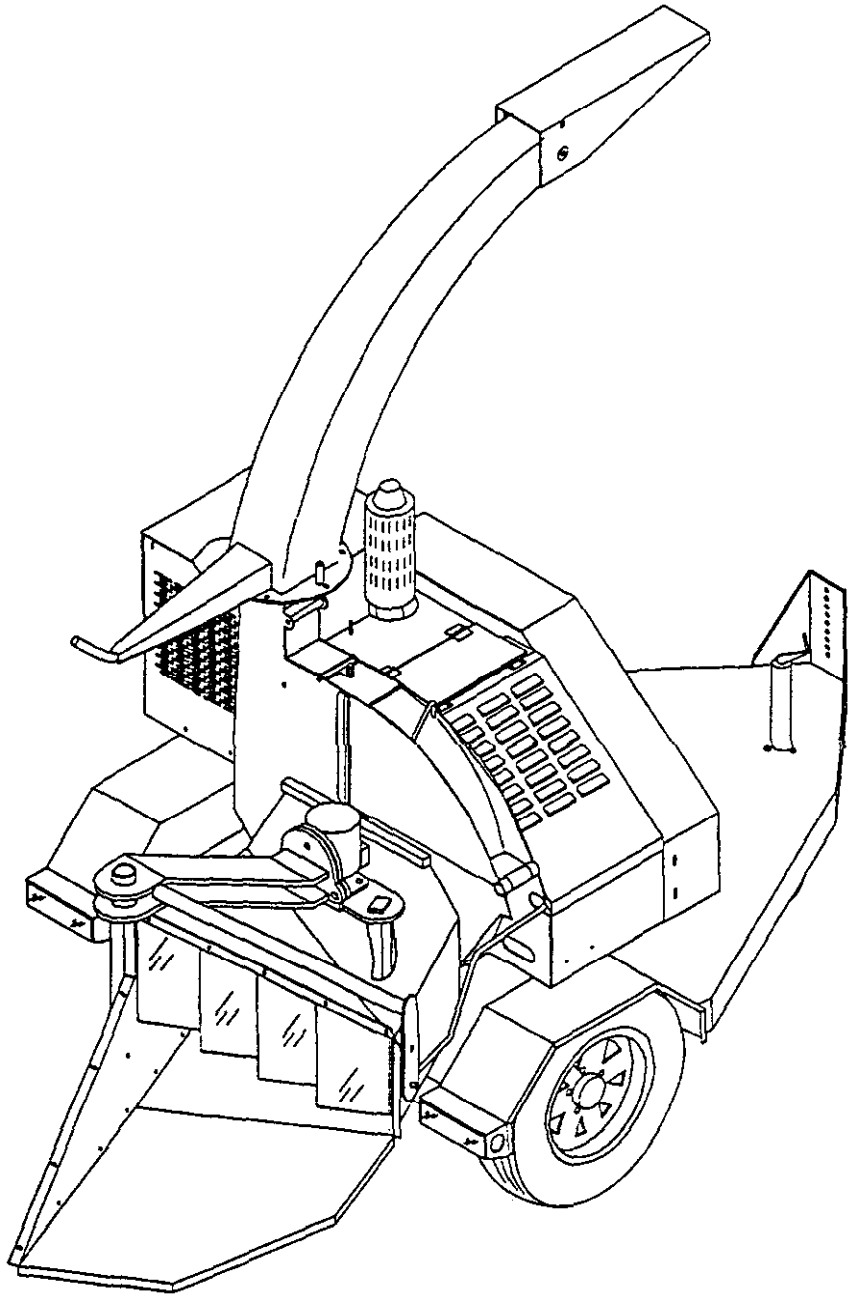

©The TORO Company - 1993

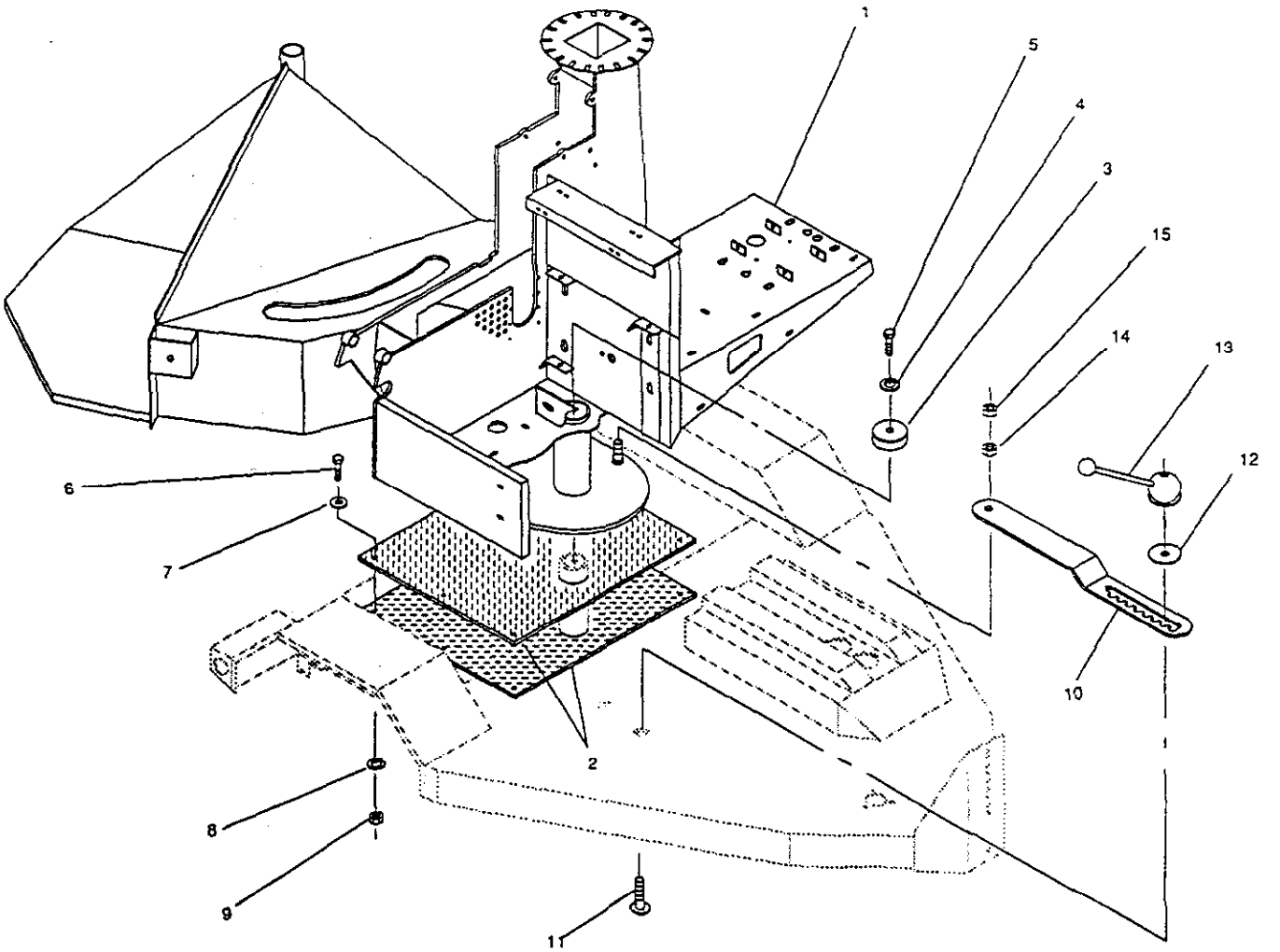

MAIN FRAME MOUNTING

182K-017

Ref. No.	Part No.	Description	No. Used
1	18-205-2803	Chipper Main Frame	1
2	18-204-0451	Pivot Base, 1/4" UHMW	2
3	18-205-0171	Pivot End Cap	1
4	01-166-0810	Lock Washer, 1/2"	1
5	01-178-0812	Capscrew - Hex Hd., 1/2" - 13 x 1-1/2"	1
6	01-178-0612	Capscrew - Hex Hd., 3/8" - 16 x 1-1/2"	6
7	01-166-0600	Flat Washer, 3/8"	6

Ref. No.	Part No.	Description	No. Used
8	01-166-0610	Lock Washer, 3/8"	6
9	01-188-0616	Hex Nut, 3/8" - 16	6
10	18-204-0641	Rotate Stop	1
11	01-173-1220	Carriage Bolt, 3/4" - 10 x 2-1/2"	1
12	18-204-2161	Rotate Washer	1
13	01-256-0190	Lever	1
14	01-188-1210	Hex Nut, 3/4" - 10	1
15	01-191-1210	Jam Nut, 3/4" - 10	1

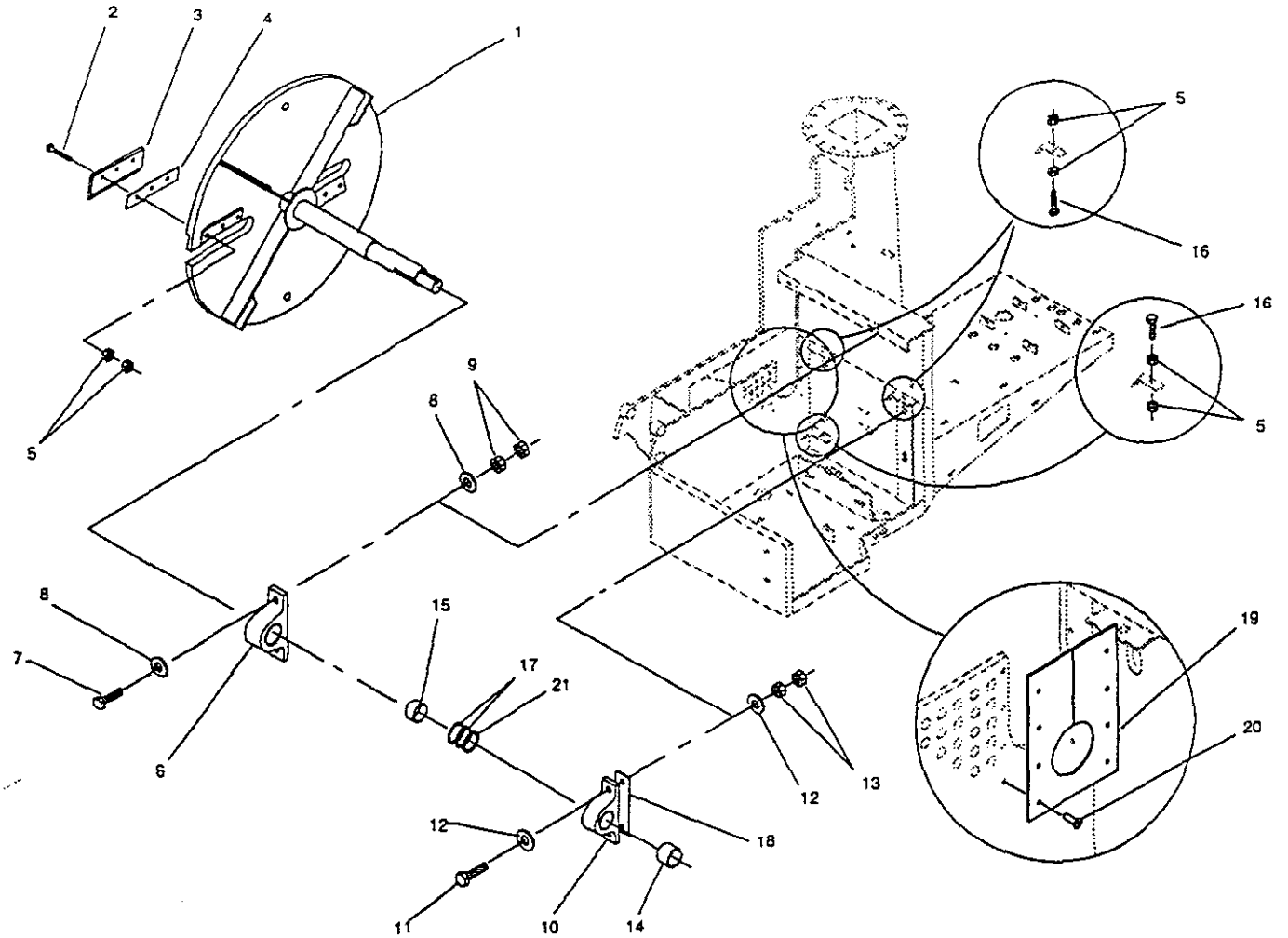

CHIPPER DISC ASSEMBLY

182K-008

Ref. No.	Part No.	Description	No. Used
1	18-205-0123	Chipper Disc	1
2	01-158-1150	Capscrew - Flat Hd. Socket, 1/2" - 13 x 2-1/2"	6
3	01-283-0320	Blade	2
4	18-204-3121	Blade Spacer, 10 ga.	2
*	18-204-3131	Blade Spacer, 22 ga. (use only when necessary)	4
5	01-188-0813	Hex Nut, 1/2" - 13	18
6	01-113-0200	Bearing, 2-7/16" P.B.	1
7	01-178-1232	Capscrew - Hex Hd., 3/4" - 10 x 4"	2
8	01-166-1200	Flat Washer, 3/4"	4
9	01-188-1210	Hex Nut, 3/4" - 10	4
10	01-113-0160	Bearing, 2" P.B.	1

Ref. No.	Part No.	Description	No. Used
11	01-178-1024	Capscrew - Hex Hd., 5/8" - 11 x 3"	2
12	01-166-1000	Flat Washer, 5/8"	4
13	01-188-1011	Hex Nut, 5/8" - 11	4
14	18-204-1961	Bearing Spacer (long)	1
15	18-204-1971	Bearing Spacer (short)	1
16	01-178-0816	Capscrew - Hex Hd., 1/2" - 13 x 2"	3
17	01-168-3210	Machinery Bushing, 2" ID x 10 ga.	2(var)
18	18-204-3021	Small Bearing Spacer, 22 ga.	1(var)
19	18-204-1391	Shaft Guard	1
20	01-161-0020	Pop Rivet, 3/16" x 1/2"	8
21	01-168-3214	Machinery Bushing, 2" ID x 14 ga.	1(var)

* Not Illustrated

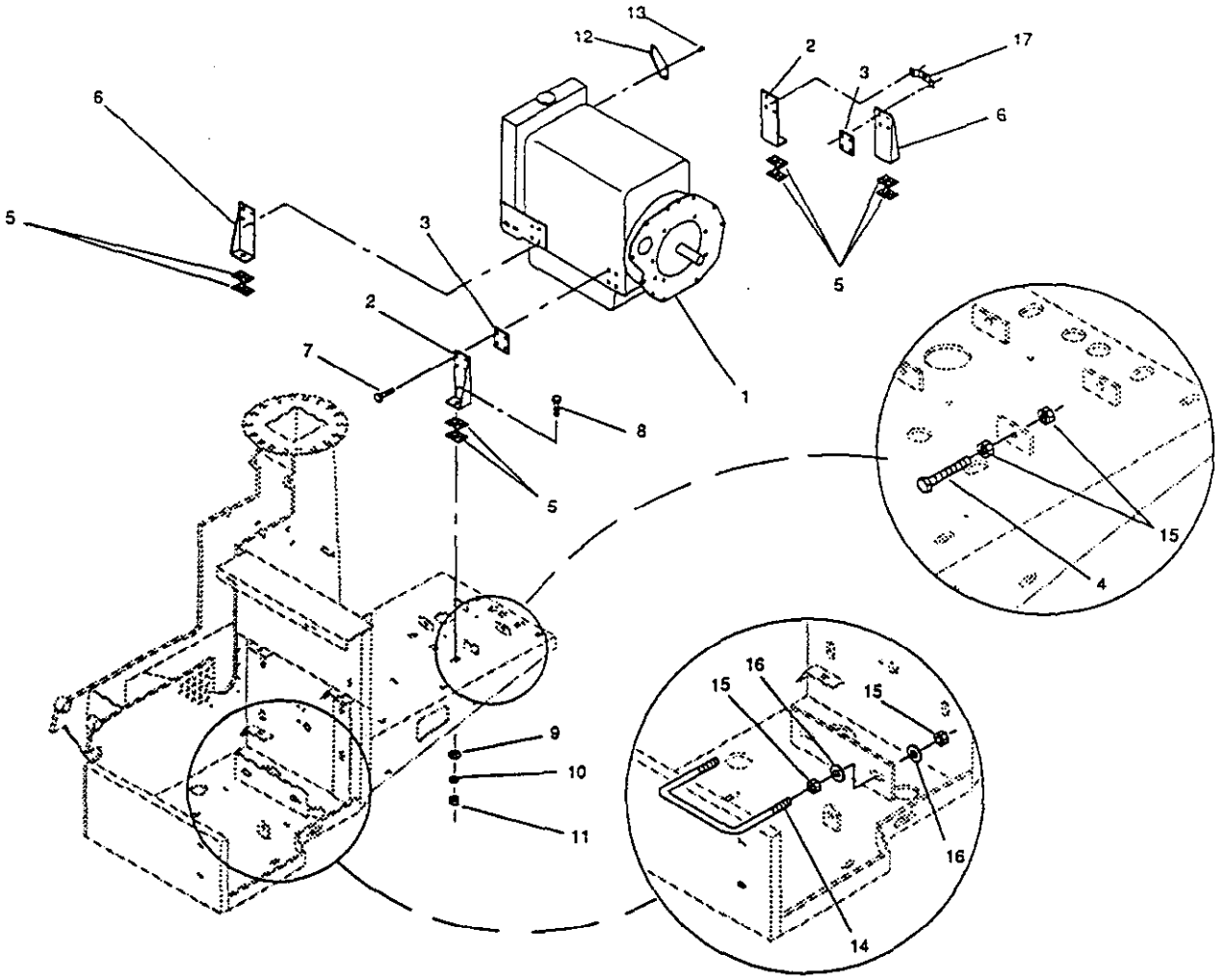

ENGINE MOUNTING

182K-009

Ref. No.	Part No.	Description	No. Used
1	01-270-3370	Engine, 20hp Kubota	1
*	01-600-0030	Battery Cable, 48"	1
*	01-600-0160	Battery Cable, 13-1/2"	1
2	18-205-2901	Motor Mount - RH	2
3	18-204-2731	Motor Mount Spacer	2
4	01-178-0620	Capscrew - Hex Hd., 3/8" - 16 x 2-1/2"	4
5	18-204-2751	Motor Mount Cushion	8
6	18-205-2891	Motor Mount - LH	2
7	01-175-0130	Capscrew - Hex Hd., M10 - 1.25 x 30	16

Ref. No.	Part No.	Description	No. Used
8	01-178-1016	Capscrew - Hex Hd., 5/8" - 11 x 2"	4
9	01-166-1000	Flat Washer, 5/8"	4
10	01-166-1010	Lock Washer, 5/8"	4
11	01-188-1011	Hex Nut, 5/8" - 11	4
12	18-204-3281	Throttle Cable Mount	1
13	01-175-0140	Capscrew - Hex Hd., M8 - 1.25 x 15	2
14	48-004-3831	Battery Hold Down	1
15	01-188-0616	Hex Nut, 3/8" - 16	12
16	01-166-0600	Flat Washer, 3/8"	4
17	18-204-3451	Fuel Filter Mount	1

* Not Illustrated

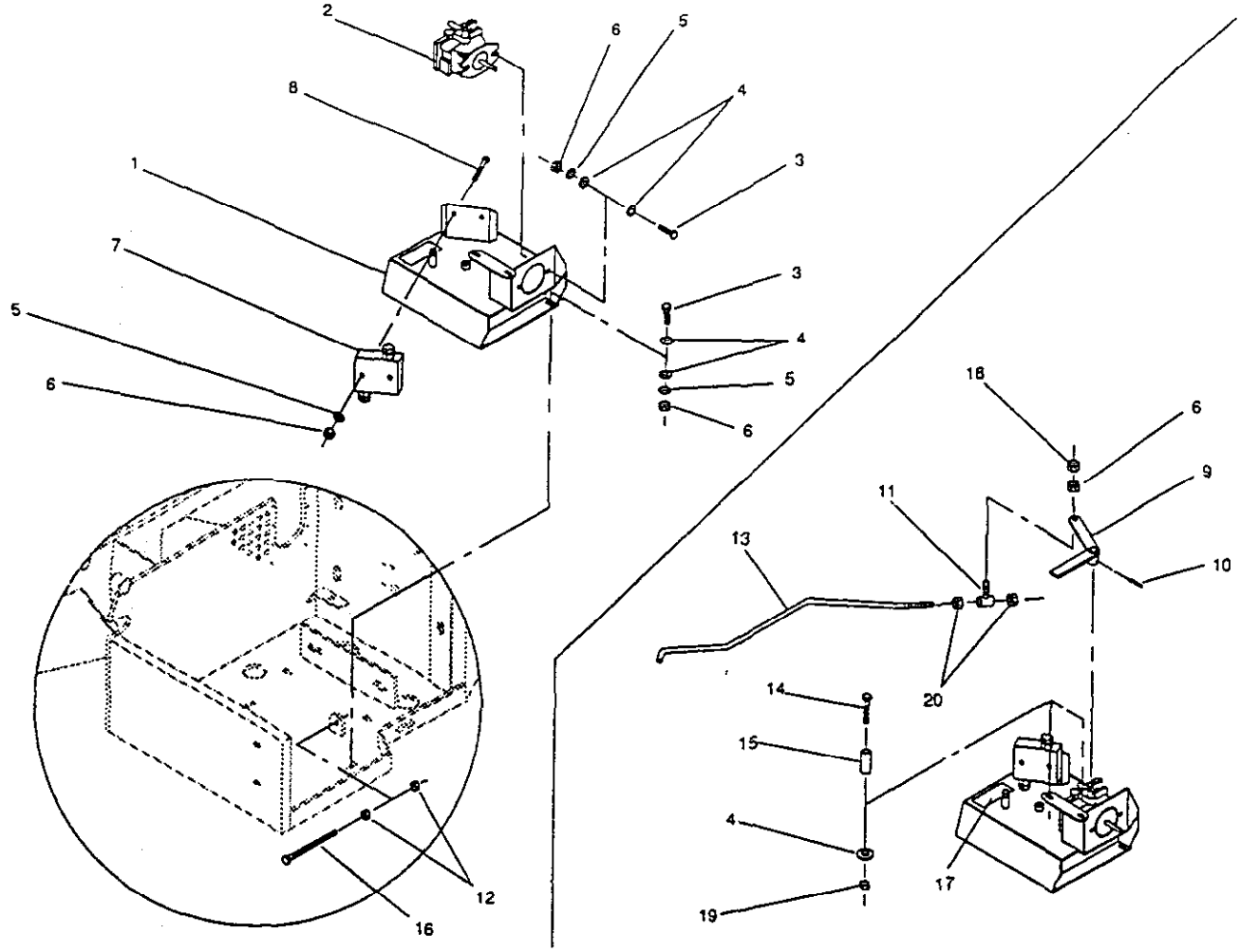

HYDRAULIC OIL TANK ASSEMBLY

182K-007

Ref. No.	Part No.	Description	No. Used
1	18-205-2401	Hydraulic Oil Tank	1
2	01-305-0790	Pump	1
*	01-305-0820	Seal Kit	1
3	01-178-0610	Capscrew - Hex Hd., 3/8" - 16 x 1-1/4"	6
4	01-166-0600	Flat Washer, 3/8"	14
5	01-166-0610	Lock Washer, 3/8"	6
6	01-188-0616	Hex Nut, 3/8" - 16	8
7	01-308-0840	Crossover Valve	1
8	01-178-0616	Capscrew - Hex Hd., 3/8" - 16 x 2"	2
9	18-205-2391	Pump Lever	1
10	01-153-0160	Roll Pin, 1/4" x 1"	1
11	18-205-0291	Rod Pivot	1
12	01-188-0813	Hex Nut, 1/2" - 13	2
13	18-204-2331	Valve Rod	1
14	01-178-0614	Capscrew - Hex Hd., 3/8" - 16 x 1-3/4"	2
15	18-204-2121	Spacer, .875" lg.	2
16	01-178-0824	Capscrew - Hex Hd., 1/2" - 13 x 3"	1
17	01-506-0560	Decal - Hydraulic Oil	1
18	01-191-0616	Jam Nut, 3/8" - 16	1
19	01-189-0616	Lock Nut, 3/8" - 16	2
20	01-191-0813	Jam Nut, 1/2" - 13	2

* Not Illustrated

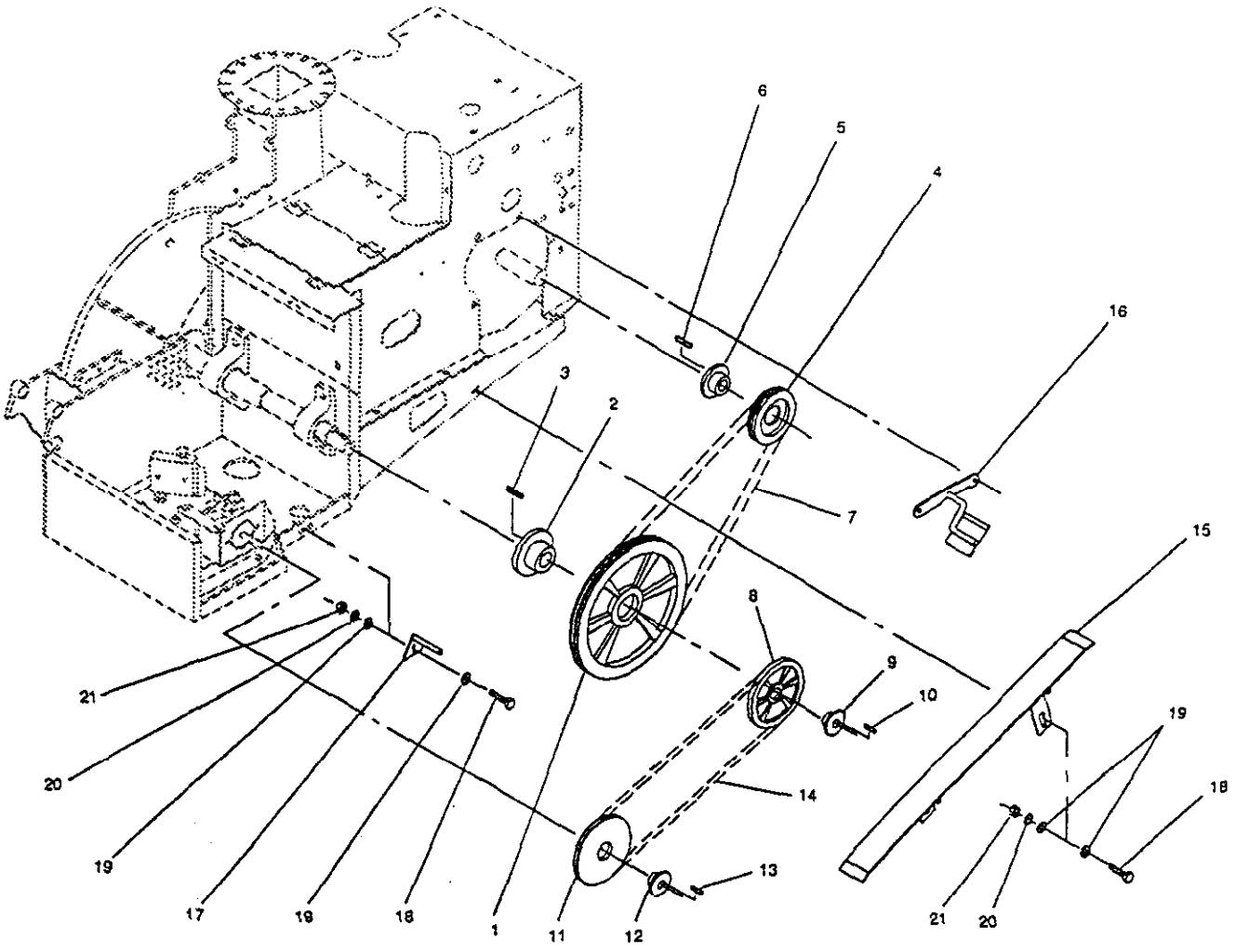

DRIVE BELTS

182K-010

Ref. No.	Part No.	Description	No. Used
1	01-260-1630	Sheave, 4B154SF	1
2	01-260-1650	Bushing, 2" SF	1
3	18-204-2171	Key, 1/2" Sq. x 2"	1
4	01-260-2060	Sheave, 4B70SK	1
5	01-260-0710	Bushing, 1-7/16" SK	1
6	41-004-5241	Key, 3/8" Sq. x 1-3/4"	1
7	01-264-0880	Belt, 4RBP93	1
8	01-260-2020	Sheave, AK61H	1
9	01-260-1660	Bushing, 1-1/4" H	1
10	---	Key, 1/4" x 3/16" x 1-1/4" (included with bushing)	1
11	01-260-2010	Sheave, 1TA5.6	1

Ref. No.	Part No.	Description	No. Used
12	01-260-2000	Bushing, P1 15mm	1
13	18-204-2961	Key, 5mm Sq. x .750" lg.	1
14	01-264-0240	Belt, A48	1
15	18-205-2881	Lower Belt Stop	1
16	18-205-2871	Top Belt Stop	1
17	18-205-2211	Bottom Belt Stop	1
18	01-178-0610	Capscrew - Hex Hd., 3/8" - 16 x 1-1/4"	3
19	01-166-0600	Flat Washer, 3/8"	6
20	01-166-0610	Lock Washer, 3/8"	3
21	01-188-0616	Hex Nut, 3/8" - 16	3

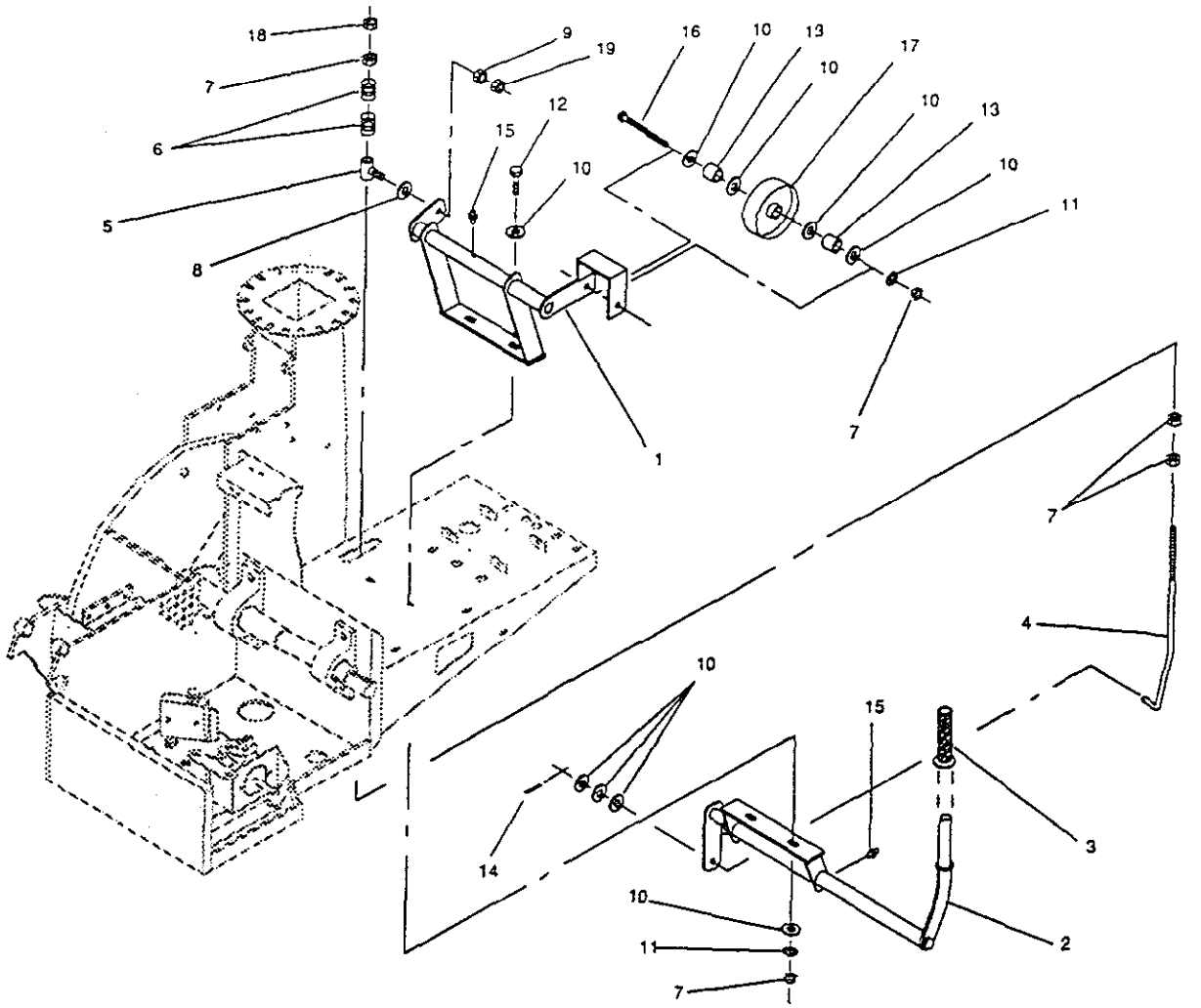

IDLER ASSEMBLY

182K-011

Ref. No.	Part No.	Description	No. Used
1	18-205-2861	Belt Idler	1
2	18-205-2851	Idler Handle	1
3	01-259-0050	Handle Grip	1
4	18-204-1731	Idler Rod	1
5	18-205-0291	Rod Pivot	1
6	01-261-0580	Spring, 1/2" OD x 1-1/4" lg.	2
7	01-188-0813	Hex Nut, 1/2" - 13	7
8	01-166-0600	Flat Washer, 3/8"	1
9	01-188-0616	Hex Nut, 3/8" - 16	2
10	01-166-0800	Flat Washer, 1/2"	11
11	01-166-0810	Lock Washer, 1/2"	3

Ref. No.	Part No.	Description	No. Used
12	01-178-0816	Capscrew - Hex Hd., 1/2" - 13 x 2"	2
13	18-204-2181	Idler Spacer	2
14	01-151-0100	Cotter Pin, 3/16" x 1"	1
15	01-215-0050	Grease Zerk	2
16	01-178-0840	Capscrew - Hex Hd., 1/2" - 13 x 5"	1
17	01-268-0200	Idler Pulley	1
18	01-191-0813	Jam Nut, 1/2" - 13	1
19	01-191-0616	Jam Nut, 3/8" - 16	1

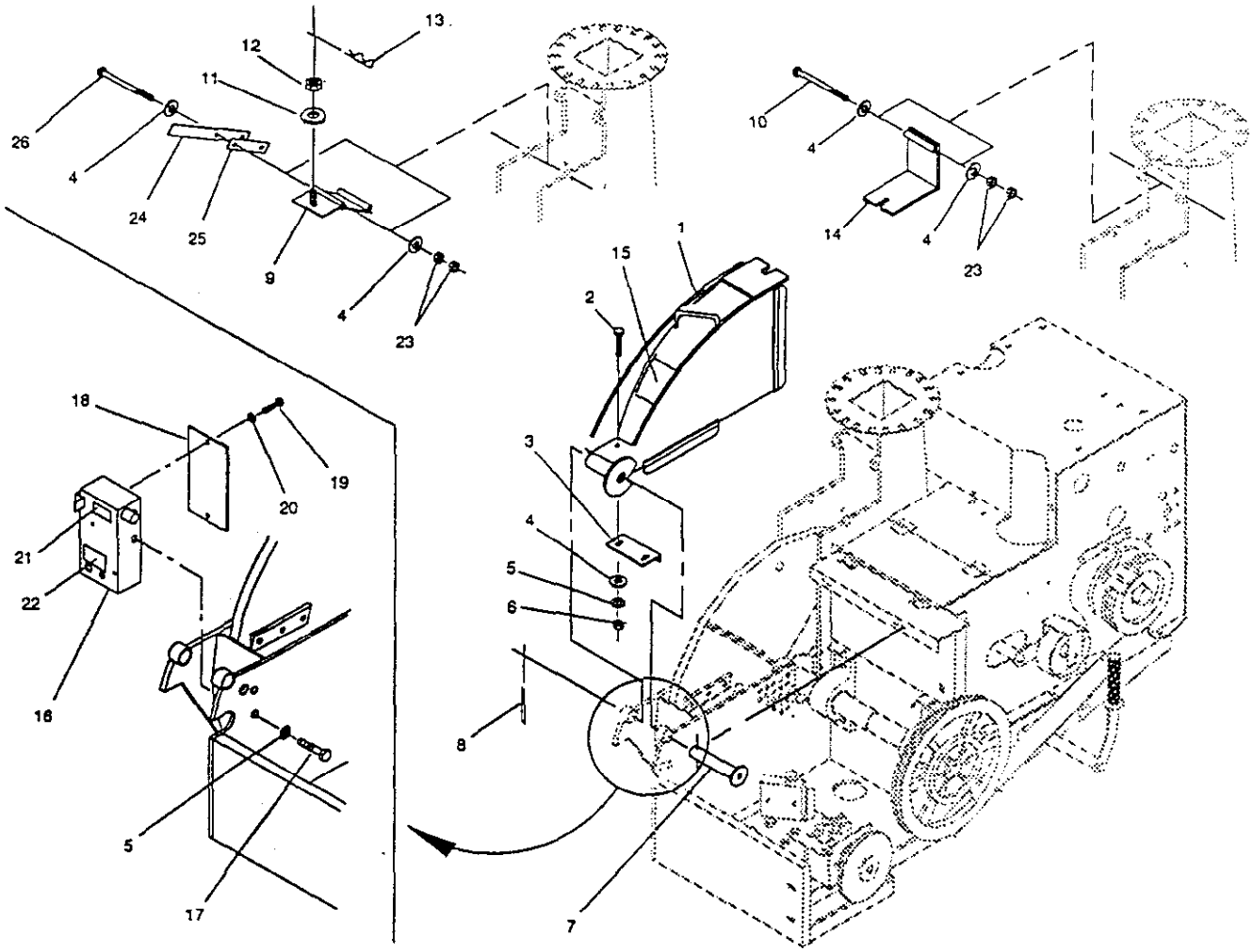

DRUM COVER

182K-002

Ref. No.	Part No.	Description	No. Used
1	18-205-0233	Drum Cover	1
2	01-178-0612	Capscrew - Hex Hd., 3/8" - 16 x 1-1/2"	2
3	18-204-3631	Door Seal Plate	1
4	01-166-0600	Flat Washer, 3/8"	8
5	01-166-0610	Lock Washer, 3/8"	4
6	01-188-0616	Hex Nut, 3/8" - 16	2
7	18-205-0301	Hinge Pin	1
8	01-151-0060	Cotter Pin, 3/16" x 1-1/2"	1
9	18-205-0182	Wrapper Top	1
10	01-178-0652	Capscrew - Hex Hd., 3/8" - 16 x 6-1/2"	1
11	01-166-1200	Flat Washer, 3/4"	1
12	01-188-1210	Hex Nut, 3/4" - 10	1
13	01-159-0010	Presto Pin, 5/32" x 2-3/4"	1
14	18-205-0381	Cleanout Lid	1

Ref. No.	Part No.	Description	No. Used
15	01-506-0020	Decal - Danger	1
16	18-205-3372	Door Control Box	1
17	01-178-0608	Capscrew - Hex Hd., 3/8" - 16 x 1"	2
18	18-204-3521	Door Box Cover	1
19	01-178-0404	Capscrew - Hex Hd., 1/4" - 20 x 1/2"	2
20	01-166-0410	Lock Washer	2
21	01-506-1240	Decal - Door Lock Handle	1
22	01-506-1250	Decal - Door Lock Release/ Timer "On-Off"	1
23	01-191-0616	Jam Nut, 3/8" - 16	6
24	18-204-3601	Door Guide	1
25	18-204-3611	Door Guide Spacer	1
26	01-178-0660	Capscrew - Hex Hd., 3/8" - 16 x 7-1/2"	2

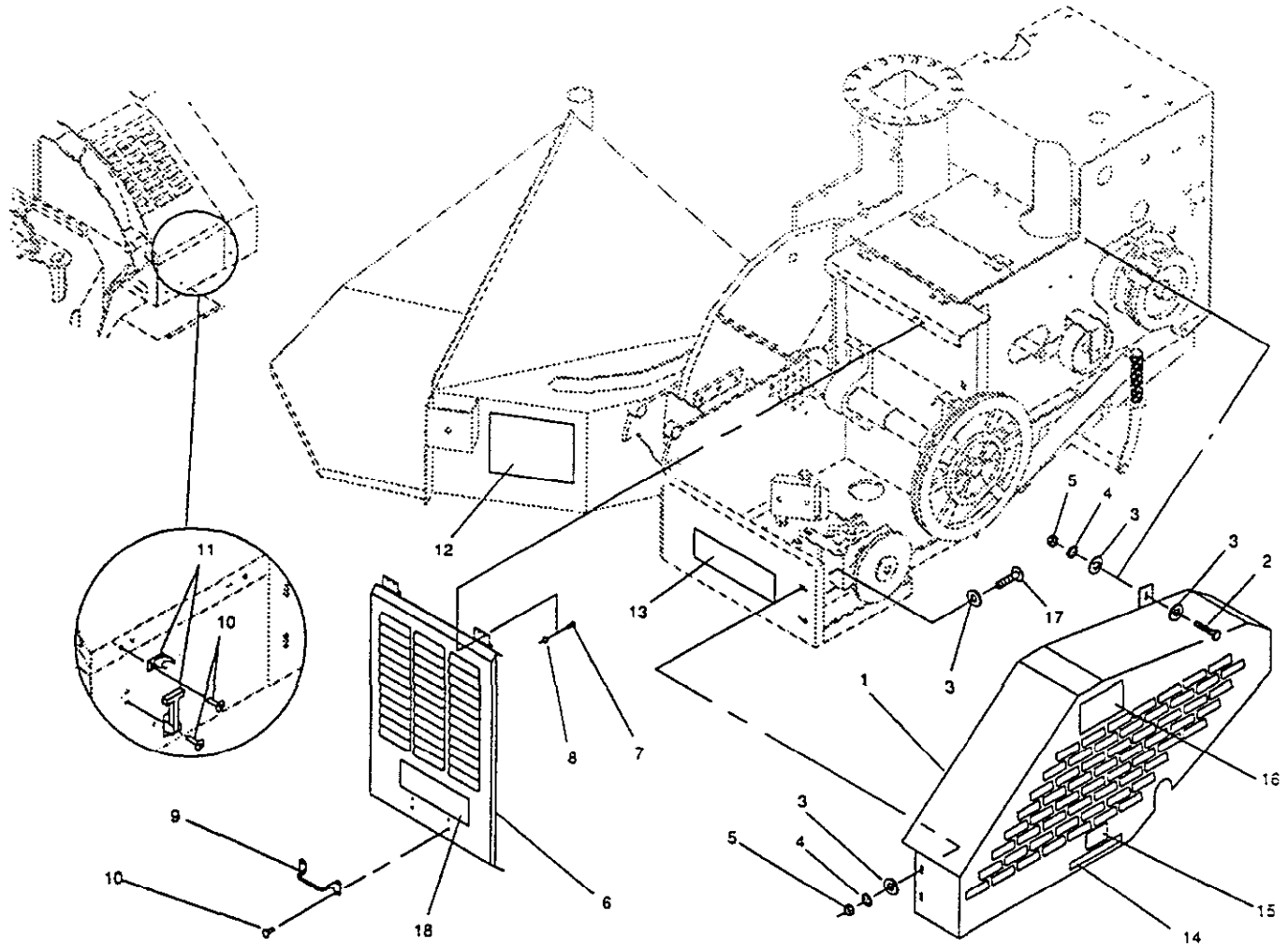

BELT GUARD & LOUVERED COVER

182K-001

Ref. No.	Part No.	Description	No. Used
1	18-205-2811	Belt Guard	1
2	01-178-0608	Capscrew - Hex Hd., 3/8" - 16 x 1"	2
3	01-166-0600	Flat Washer, 3/8"	6
4	01-166-0610	Lock Washer, 3/8"	4
5	01-188-0616	Hex Nut, 3/8" - 16	4
6	18-205-3011	Louvered Cover	1
7	01-158-0200	Capscrew - Hex Hd., #10 - 24 x 1/2"	4
8	01-192-0200	Whiz Nut, #10 - 24	4
9	01-256-0140	Handle	1

Ref. No.	Part No.	Description	No. Used
10	01-161-0060	Pop Rivet, 3/16" x 1/2" sm. hd.	12
11	01-270-1350	Rubber Latch	2
12	01-506-0260	Decal - Operating Instr.	1
13	01-506-0700	Decal - Chipper 1820D	1
14	01-506-1140	Decal - Disengage/Engage	1
15	01-506-1130	Decal - Before Starting	1
16	01-506-0500	Decal - Toro	1
17	01-173-0612	Carriage Bolt, 3/8" - 16 x 1-1/2"	2
18	01-506-1230	Decal - Danger	1

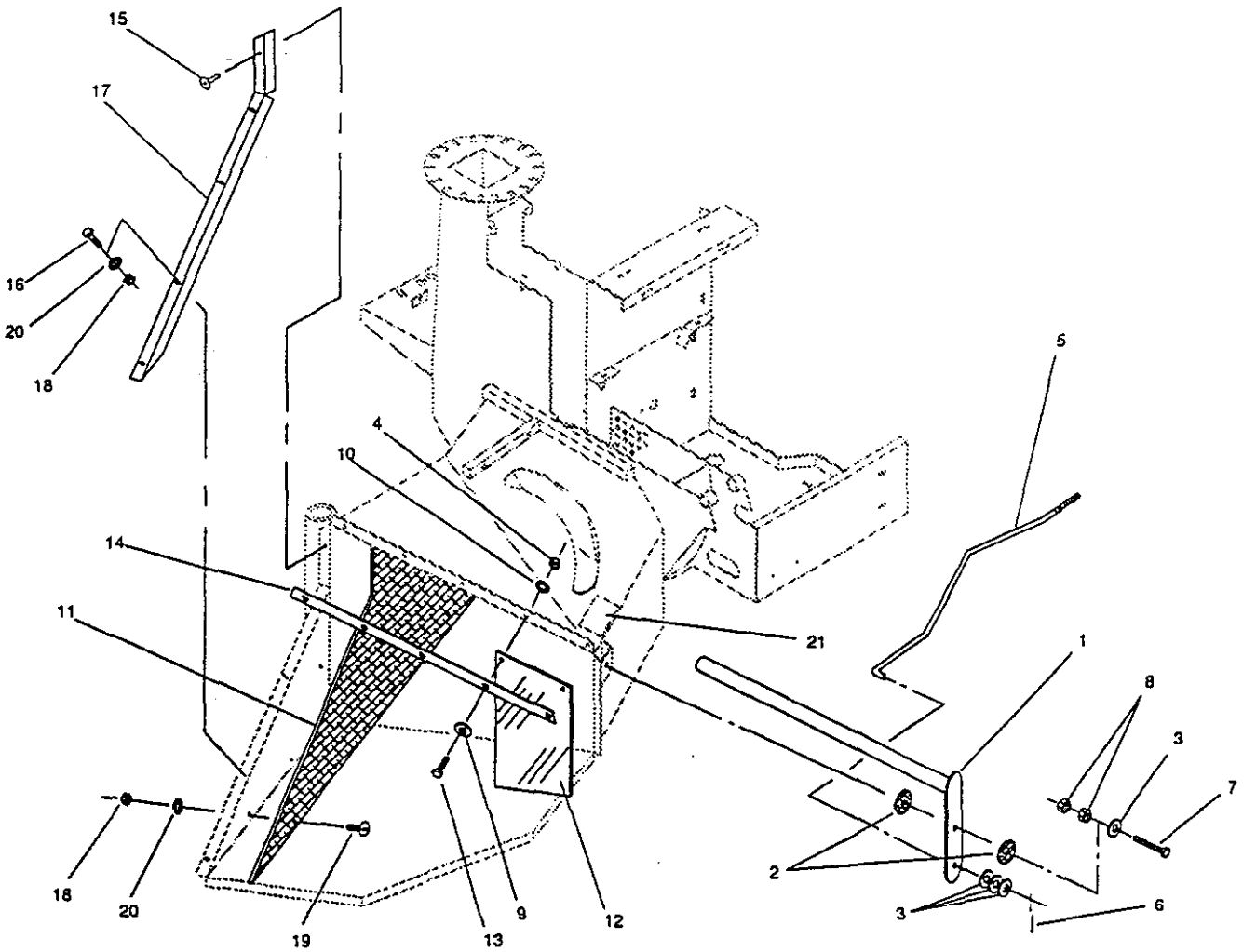

ROLLER LEVER & FEED TABLE

182K-003

Ref. No.	Part No.	Description	No. Used
1	18-205-0281	Roller Lever	1
2	18-204-1541	Roller Lever Pad, 1/4" UHMW	2
3	01-166-0800	Flat Washer, 1/2"	4
4	01-188-0616	Hex Nut, 3/8" - 16	5
5	18-204-2331	Valve Rod	1
6	01-151-0040	Cotter Pin, 1/8" x 1"	1
7	01-178-0816	Capscrew - Hex Hd., 1/2" x 2"	1
8	01-191-0813	Jam Nut, 1/2" - 13	2
9	01-166-0600	Flat Washer, 3/8"	5
10	01-166-0610	Lock Washer, 3/8"	5
11	18-204-1061	Side Plate, 1/4" UHMW	1

Ref. No.	Part No.	Description	No. Used
12	18-204-1481	Feed Guard	4
13	01-178-0610	Capscrew - Hex Hd., 3/8" - 16 x 1-1/4"	5
14	18-204-1471	Feed Guard Flat	1
15	01-161-0020	Pop Rivet, 3/16" x 1/2" lg. hd.	1
16	01-178-0508	Capscrew - Hex Hd., 5/16" - 18 x 1"	4
17	18-204-1921	Corner Guard	1
18	01-188-0518	Hex Nut, 5/16" - 18	16
19	01-173-0508	Carriage Bolt, 5/16" - 18 x 1"	12
20	01-166-0510	Lock Washer, 5/16"	16
21	01-506-0320	Decal - Rev/N/Forward	1

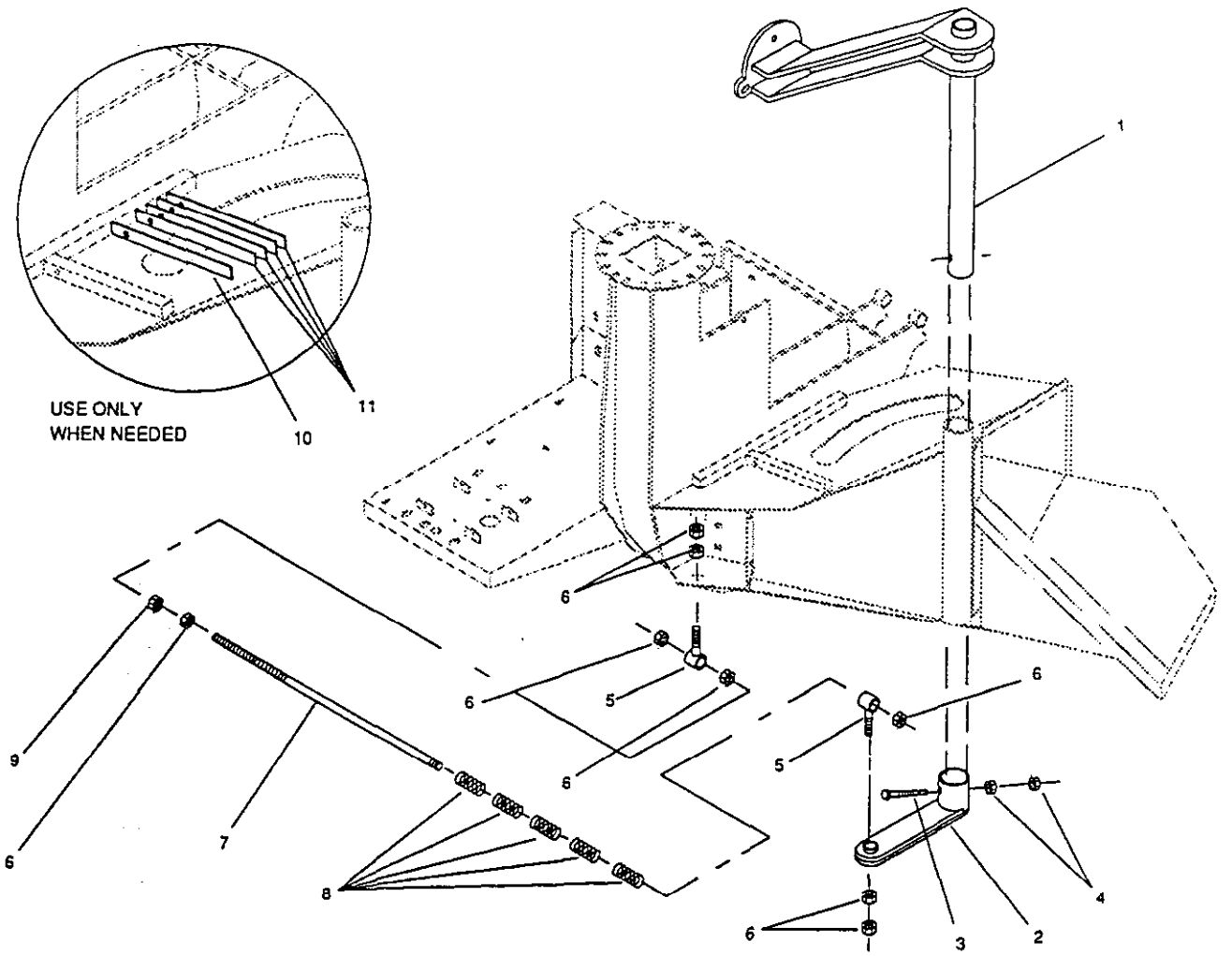

ROLLER PIVOT ARM

182K-005

Ref. No.	Part No.	Description	No. Used
1	18-205-0212	Roller Pivot Arm	1
2	18-205-0161	Spring Bracket	1
3	01-178-0832	Capscrew - Hex Hd., 1/2" - 13 x 4"	1
4	01-188-0813	Hex Nut, 1/2" - 13	2
5	18-205-0221	Spring Rod Pivot Bolt	2

Ref. No.	Part No.	Description	No. Used
6	01-188-1210	Hex Nut, 3/4" - 10	8
7	18-204-0801	Spring Rod	1
8	01-261-0400	Spring, 1-1/2" OD x 5" lg.	5
9	01-191-1210	Jam Nut, 3/4" - 10	1
10	18-204-1981	Roller Spacer, 16 ga.	1
11	18-204-1991	Roller Spacer, 10 ga.	4

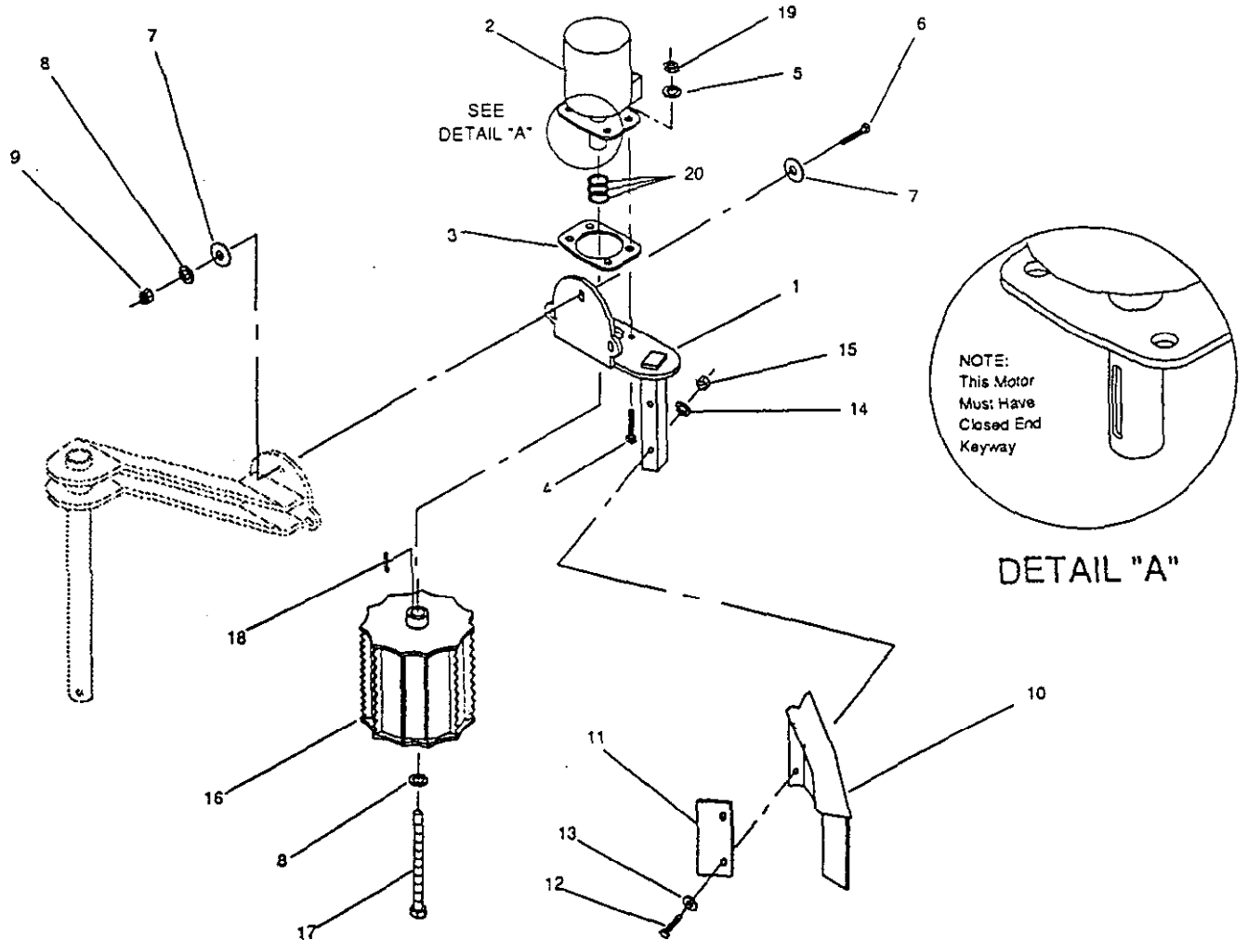

FEED ROLLER

182K-004

Ref. No.	Part No.	Description	No. Used
1	18-205-0202	Motor Plate	1
2	01-304-0420	Hydraulic Motor	1
*	01-304-0260	Seal Kit	1
3	18-204-0461	Roller Motor Spacer	1
4	01-178-0816	Capscrew - Hex Hd., 1/2" - 13 x 2"	4
5	01-166-0810	Lock Washer, 1/2"	4
6	01-178-1020	Capscrew - Hex Hd., 5/8" - 11 x 2-1/2"	3
7	18-204-0761	Arm Spacer Top	6
8	01-166-1010	Lock Washer, 5/8"	4
9	01-188-1011	Hex Nut, 5/8" - 11	3
10	18-205-0251	Disc Guard	1

Ref. No.	Part No.	Description	No. Used
11	18-204-2231	Roller Guard	1
12	01-178-0622	Capscrew - Hex Hd., 3/8" - 16 x 2-3/4"	2
13	01-166-0600	Flat Washer, 3/8"	2
14	01-166-0610	Lock Washer, 3/8"	2
15	01-188-0616	Hex Nut, 3/8" - 16	2
16	18-205-0262	Feed Roller	1
17	18-205-0321	Roller Bolt	1
18	41-004-5201	Key, 5/16" Sq. x 1-1/2"	1
19	01-188-0813	Hex Nut, 1/2" - 13	4
20	01-168-2010	Machinery Bushing, 1-1/4" ID x 10 ga.	3(var)

* Not Illustrated

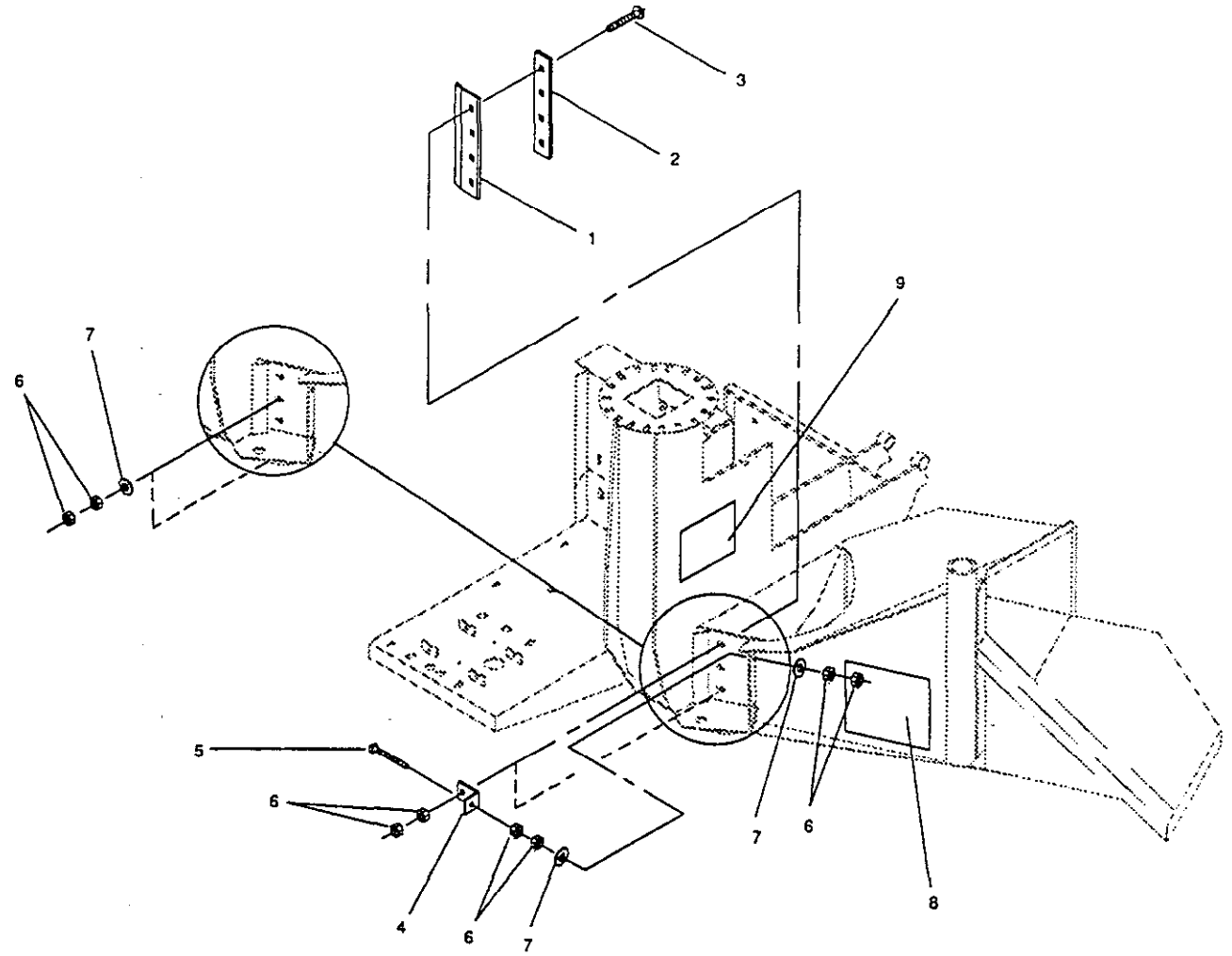

CUTTER BAR ASSEMBLY

182K-006

Ref. No.	Part No.	Description	No. Used
1	18-204-3111	Cutter Bar	1
2	18-205-0271	Cutter Bar Spacer	1
3	01-173-0816	Carriage Bolt, 1/2" - 13 x 2"	4
4	18-204-1181	Cutter Bar Bracket	2
5	01-182-0832	Capscrew - Hex Hd., 1/2" - 13 x 4" all thread	2

Ref. No.	Part No.	Description	No. Used
6	01-188-0813	Hex Nut, 1/2" - 13	16
7	01-166-0800	Flat Washer, 1/2"	6
8	01-506-0260	Decal - Operating Instr.	1
9	01-506-0500	Decal - Toro	1

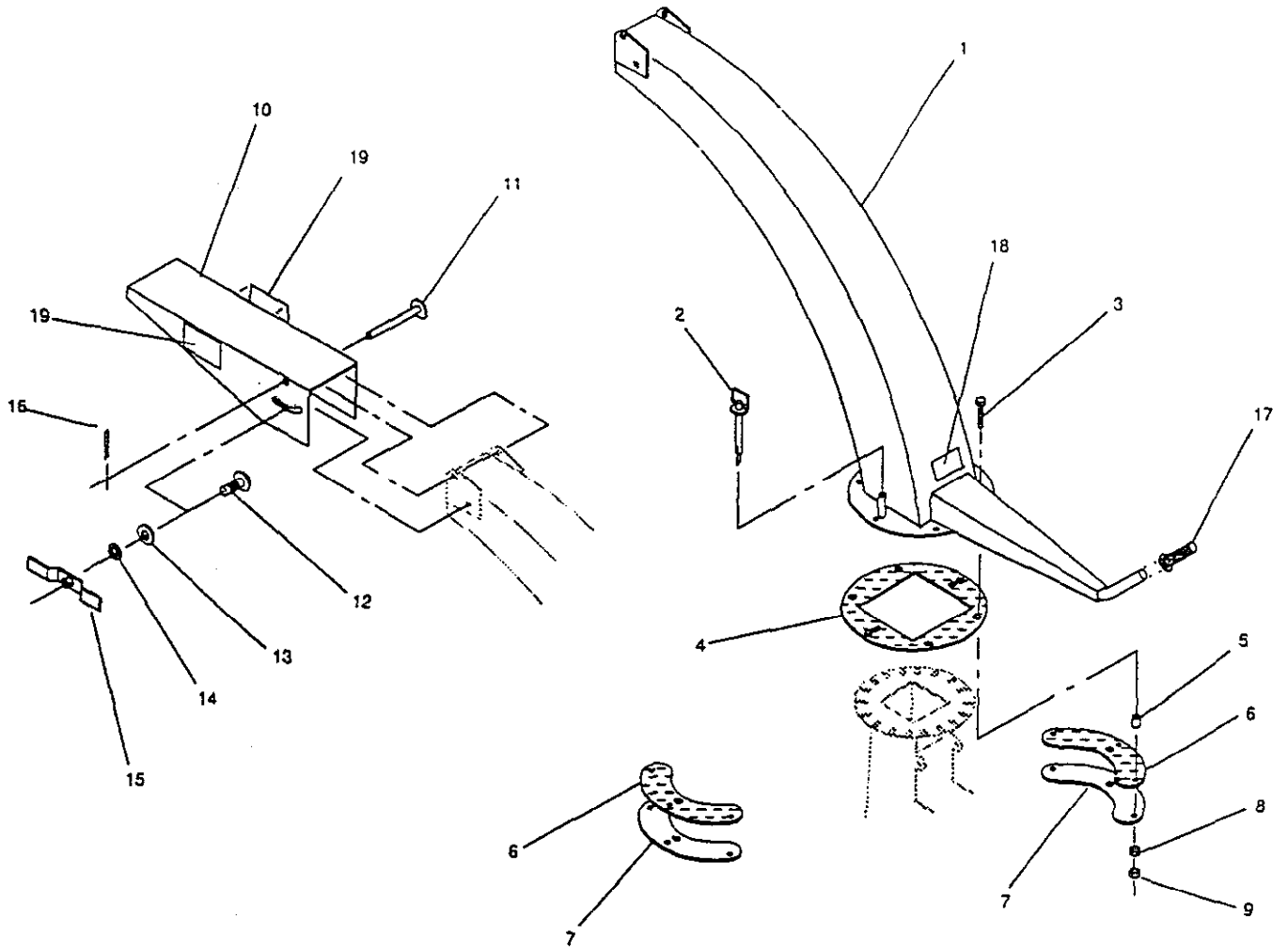

CHUTE ASSEMBLY

182K-013

Ref. No.	Part No.	Description	No. Used
1	18-205-0193	Chute	1
2	01-276-0160	Hitch Pin	1
3	01-178-0816	Capscrew - Hex Hd., 1/2" - 13 x 2"	6
4	18-204-0591	Chute Flange Spacer, 1/4" UHMW	1
5	18-204-1271	Directional Spacer	6
6	18-204-1201	Chute Washer, 1/4" UHMW	2
7	18-204-1191	Chute Clamp	2
8	01-188-0813	Hex Nut, 1/2" - 13	6
9	01-191-0813	Jam Nut, 1/2" - 13	6

Ref. No.	Part No.	Description	No. Used
10	18-204-1821	Deflector	1
11	18-205-0361	Deflector Pin	1
12	01-173-0816	Carriage Bolt, 1/2" - 13 x 2"	1
13	01-166-0800	Flat Washer, 1/2"	1
14	01-166-0810	Lock Washer, 1/2"	1
15	18-205-0311	Wing Nut	1
16	01-151-0040	Cotter Pin, 1/8" x 1"	1
17	01-259-0050	Foam Handle	1
18	01-506-0290	Decal - Danger	1
19	01-506-0300	Decal - Danger	2

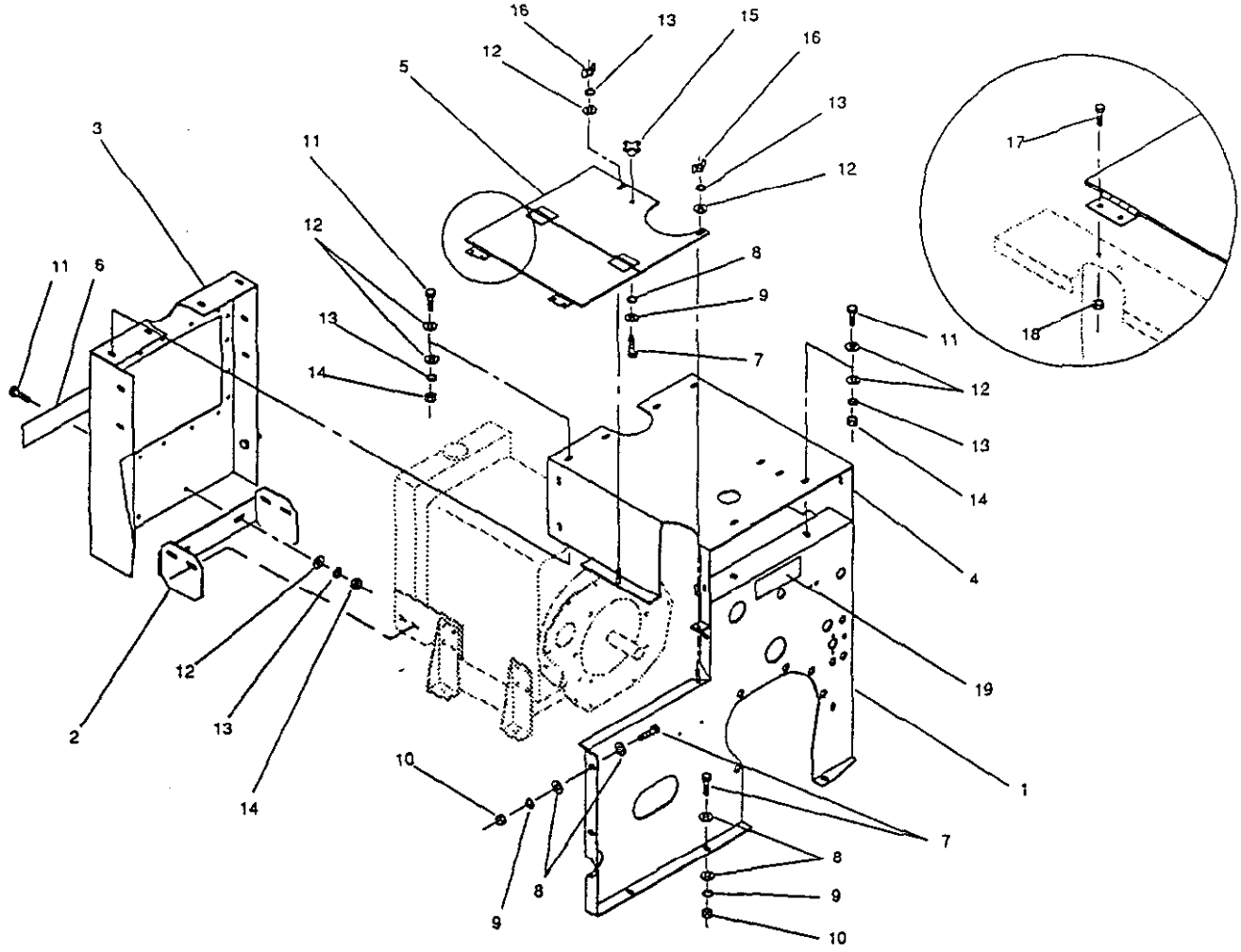

ENGINE COWLING

182K-012

Ref. No.	Part No.	Description	No. Used
1	18-205-2911	Front Guard	1
2	18-205-2921	Radiator Cowling Mount	1
3	18-205-3341	Front Cowling	1
4	18-205-2841	Top Cowling	1
5	18-205-2831	Top Lid	1
6	01-506-0700	Decal - Chipper 1820D	1
7	01-178-0608	Capscrew - Hex Hd., 3/8" - 16 x 1"	6
8	01-166-0600	Flat Washer, 3/8"	11
9	01-166-0610	Lock Washer, 3/8"	6
10	01-188-0616	Hex Nut, 3/8" - 16	5

Ref. No.	Part No.	Description	No. Used
11	01-178-0506	Capscrew - Hex Hd., 5/16" - 18 x 3/4"	15
12	01-166-0500	Flat Washer, 5/16"	30
13	01-166-0510	Lock Washer, 5/16"	17
14	01-188-0518	Hex Nut, 5/16" - 18	15
15	01-257-0010	Knob	1
16	01-192-0420	Wing Nut, 5/16" - 18	2
17	01-158-0200	Capscrew - Hex Hd., #10 - 24 x 1/2"	4
18	01-192-0200	Whiz Nut, #10 - 24	4
19	01-506-0030	Decal - Danger	1

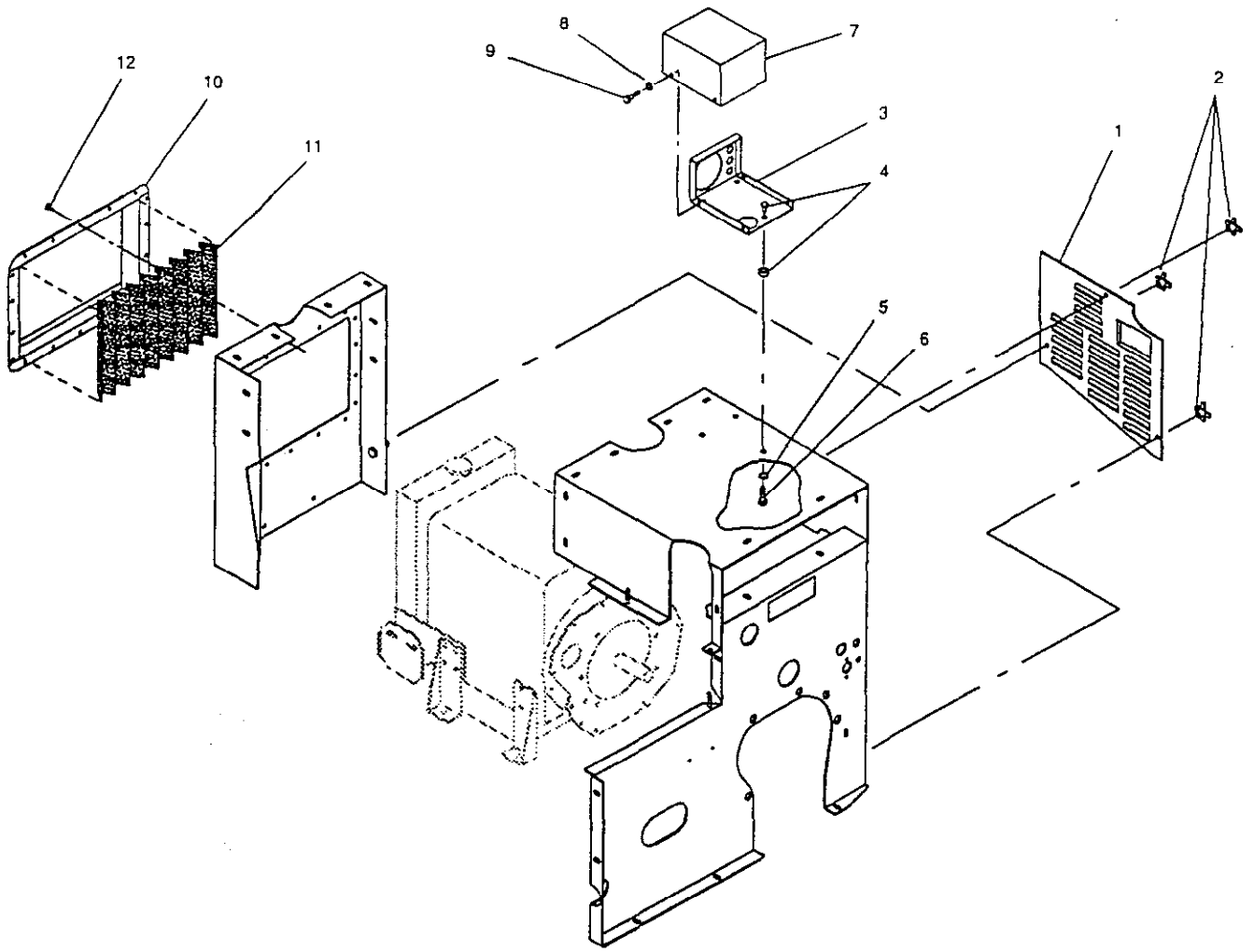

ENGINE COWLING (Continued)

182K-019

Ref. No.	Part No.	Description	No. Used
1	18-205-3391	Access Panel	1
2	01-257-0010	Knob	3
3	18-205-3351	Control Box	1
4	01-286-0560	Rubber Mount	3
5	01-166-0510	Lock Washer, 5/16"	3
6	01-178-0504	Capscrew - Hex Hd. 5/16" - 18 x 1/2"	3

Ref. No.	Part No.	Description	No. Used
7	18-205-3361	Control Box Cover	1
8	01-166-0410	Lock Washer, 1/4"	4
9	01-178-0404	Capscrew - Hex Hd., 1/4" - 20 x 1/2"	4
10	18-205-3321	Radiator Screen Frame	1
11	18-204-3431	Radiator Screen	1
12	01-161-0060	Pop Rivet, 3/16" x 1/2"	18

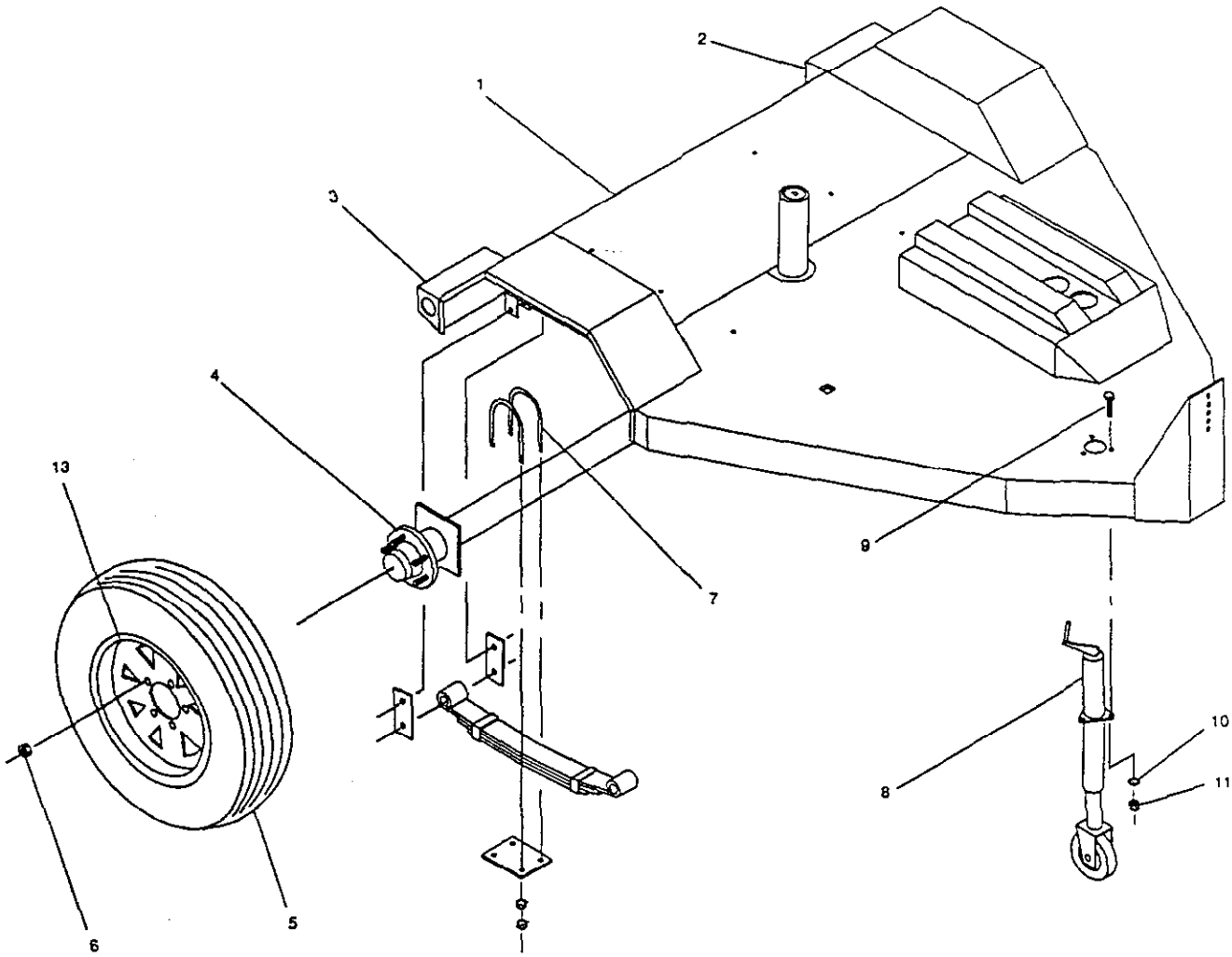

TRAILER ASSEMBLY

182K-014

Ref. No.	Part No.	Description	No. Used
1	18-205-2823	Trailer Main Frame	1
2	01-607-0020	Tail Light, L.H.	1
3	01-607-0010	Tail Light, R.H.	1
4	01-285-0610	Axle	1
5	01-269-1510	Tire, B-78-13 6 ply	2
6	01-269-0300	Lug Nut, 1/2" - 20	10
7	01-285-0340	Hanger Kit	1
*	01-285-0260	Attaching Parts Kit	1

Ref. No.	Part No.	Description	No. Used
8	18-205-3001	Jack	1
9	01-178-0812	Capscrew - Hex Hd., 1/2" - 13 x 1-1/2"	3
10	01-166-0810	Lock Washer, 1/2"	3
11	01-188-0813	Hex Nut, 1/2" - 13	3
12	01-506-0540	Decal - No Riders	2
13	01-269-1520	Wheel	2

* Not Illustrated

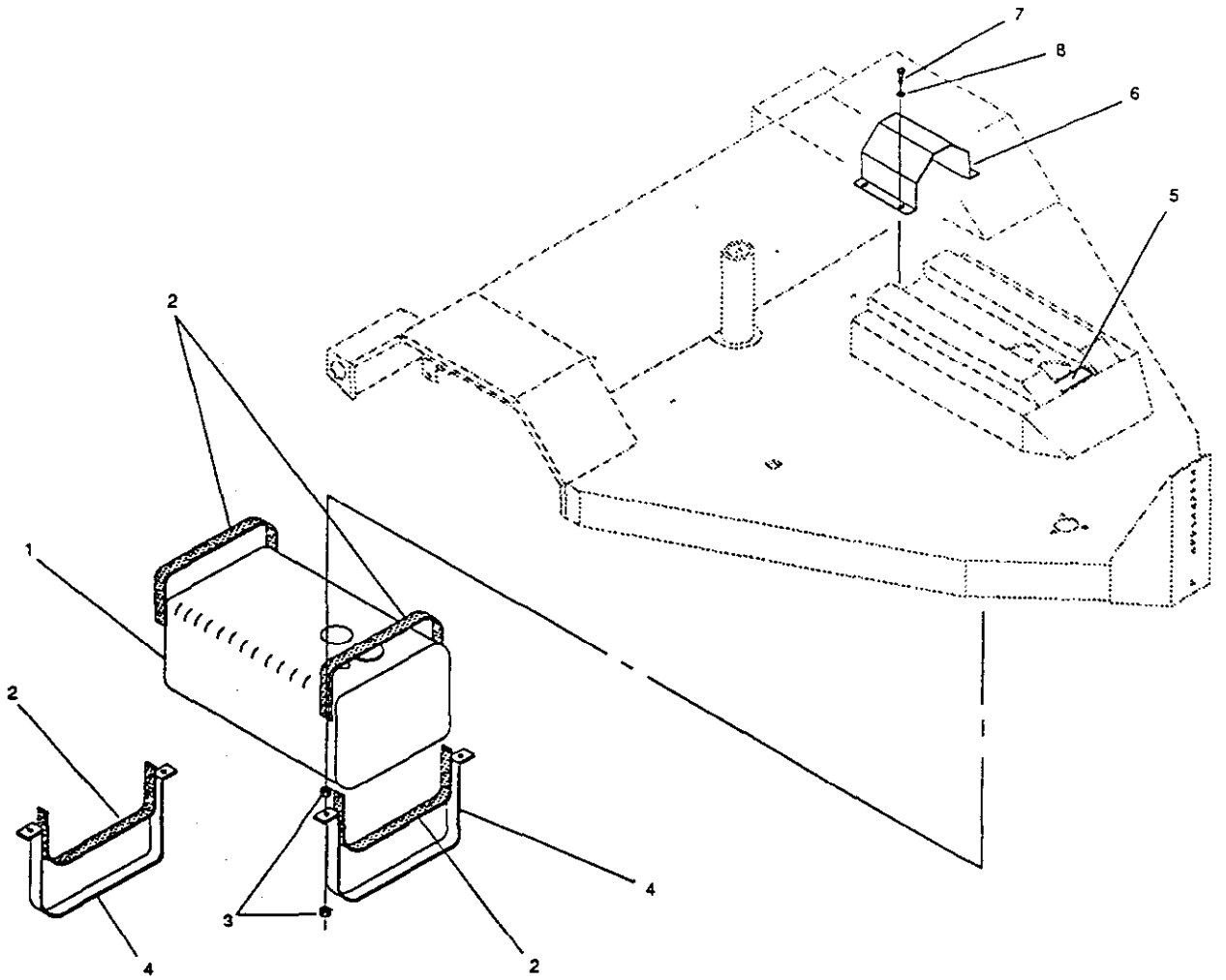

FUEL TANK ASSEMBLY

182K-015

Ref. No.	Part No.	Description	No. Used
1	01-280-0220	Gas Tank, 12 Gal.	1
2	18-204-1781	Gas Tank Strap, 1/8" rubber	4
3	01-188-0616	Hex Nut, 3/8" - 16	9
4	18-204-1121	Gas Tank Strap	2
5	01-506-0960	Decal - Diesel Only	1

Ref. No.	Part No.	Description	No. Used
6	18-205-3311	Fuel Pump Cover	1
7	01-178-0406	Capscrew - Hex Hd. 1/4" - 20 x 3/4"	4
8	01-166-0410	Lock Washer, 1/4"	4

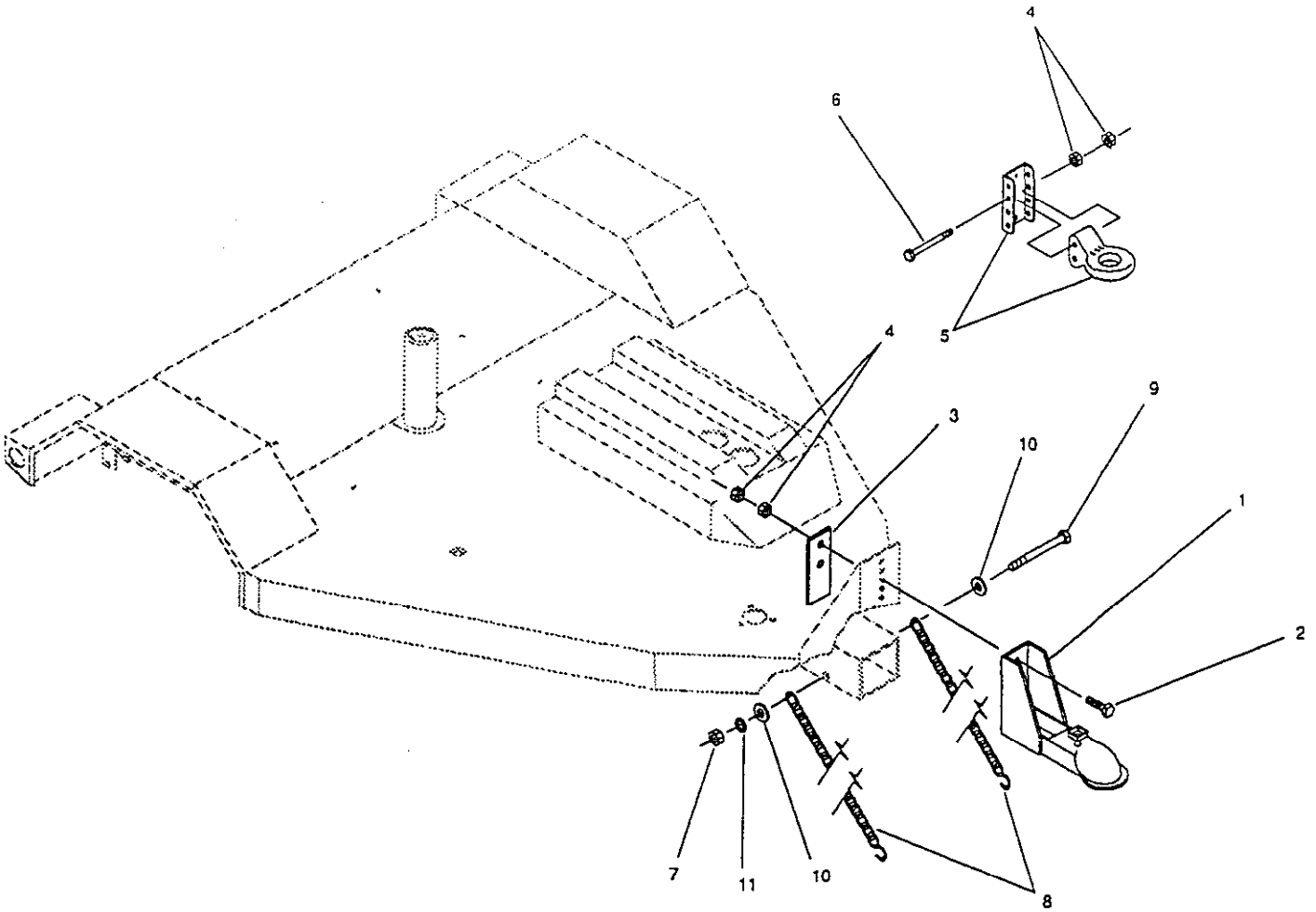

HITCH ASSEMBLY

182K-016

Ref. No.	Part No.	Description	No. Used
1	31-005-0172	Hitch	1
2	01-178-1020	Capscrew - Hex Hd., 5/8" - 11 x 2-1/2"	2
3	31-004-0941	Hitch Bracket	1
4	01-188-1011	Hex Nut, 5/8" - 11	8
5	02-276-0100	Pintle Hitch (optional)	1
6	01-178-1040	Capscrew - Hex Hd., 5/8" - 11 x 5"	2

Ref. No.	Part No.	Description	No. Used
7	01-188-0616	Hex Nut, 3/8" - 16	1
8	01-251-0360	Safety Chain	2
9	01-178-0644	Capscrew - Hex Hd., 3/8" - 16 x 5-1/2"	1
10	01-166-0600	Flat Washer, 3/8"	2
11	01-166-0610	Lock Washer, 3/8"	1

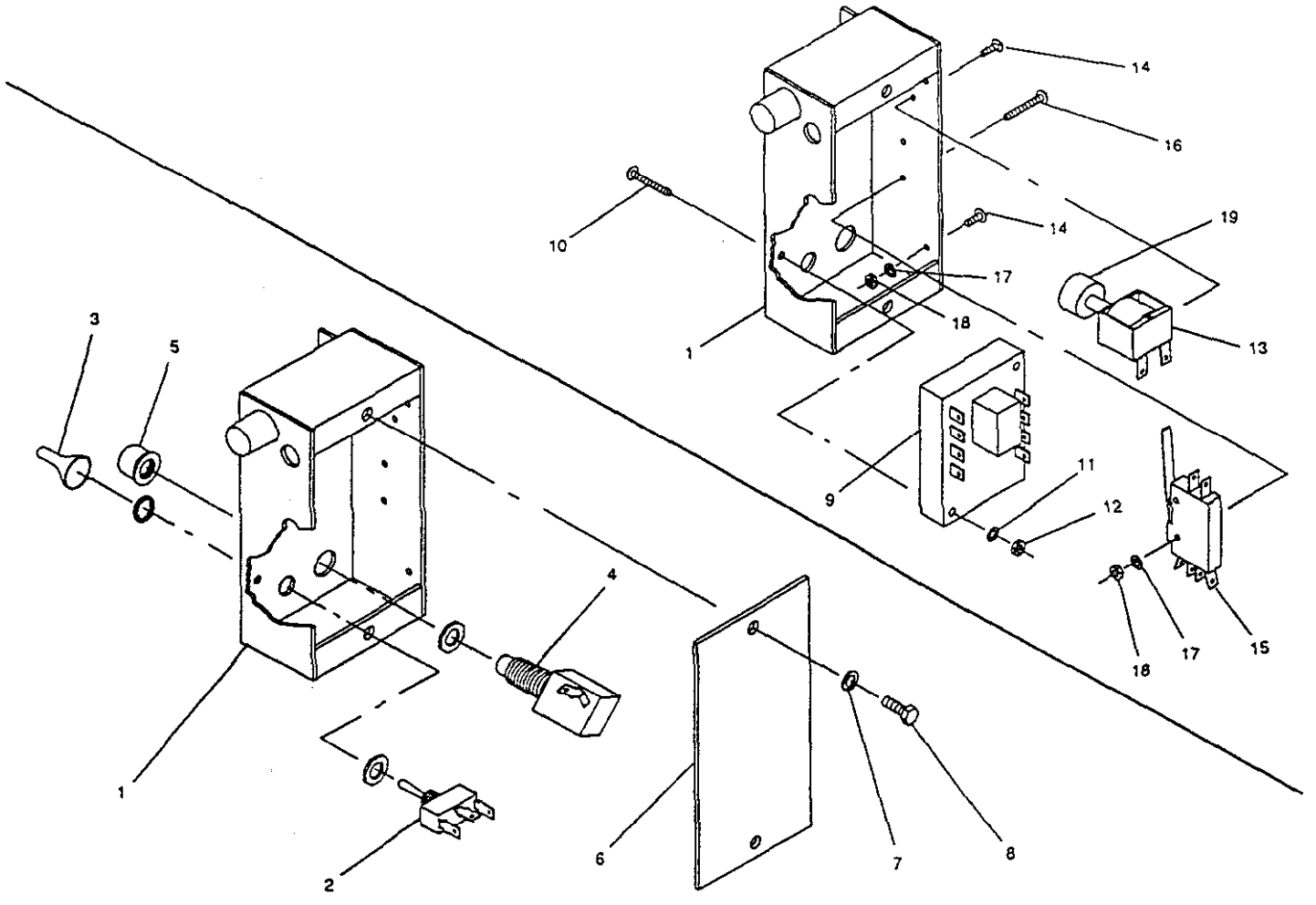

DOOR LOCK ASSEMBLY

182-019

Ref. No.	Part No.	Description	No. Used
1	18-205-3372	Door Control Box	1
2	01-603-0880	Toggle Switch	1
3	01-603-0890	Toggle Seal	1
4	01-603-0870	Momentary Ground Switch	1
5	01-603-0900	Dust Cap	1
6	18-204-3521	Door Box Cover	1
7	01-166-0410	Lock Washer, 1/4"	2
8	01-178-0404	Capscrew - Hex Hd., 1/4" - 20 x 1/2"	2
9	01-612-0600	Timer	1
10	01-158-1470	Machine Screw - Rd. Hd., #8 - 32 x 1-1/4"	2
11	01-169-0140	Lock Washer, #8	2

Ref. No.	Part No.	Description	No. Used
12	01-192-0500	Hex Nut, #8 - 32	2
13	01-603-0860	Solenoid	1
14	01-158-1620	Machine Screw - Rd. Hd., #6 - 32 x 1/4"	3
15	01-603-0850	Snap Action Switch	1
16	01-158-1630	Machine Screw - Rd. Hd., #6 - 32 x 7/8"	2
17	01-169-0130	Lock Washer, #6	3
18	01-192-0490	Hex Nut, #6 - 32	3
19	18-204-3551	Solenoid Lock Stop	1
*	18-202-0011	Solenoid Assembly (Incl. Ref #13,19)	1
*	01-606-0370	Wiring Harness	1

DOOR LOCK BOX WIRING DIAGRAM

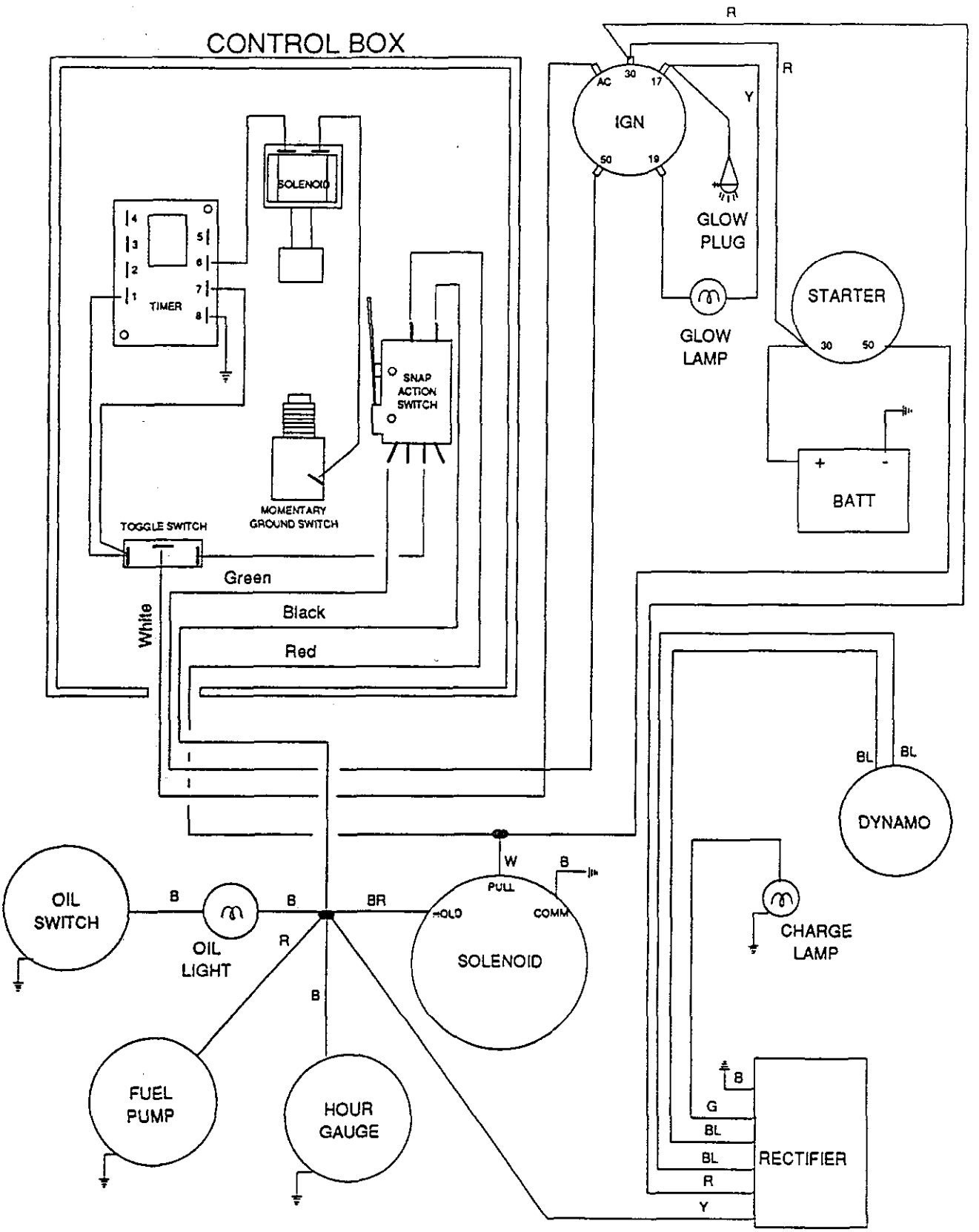

182K-020

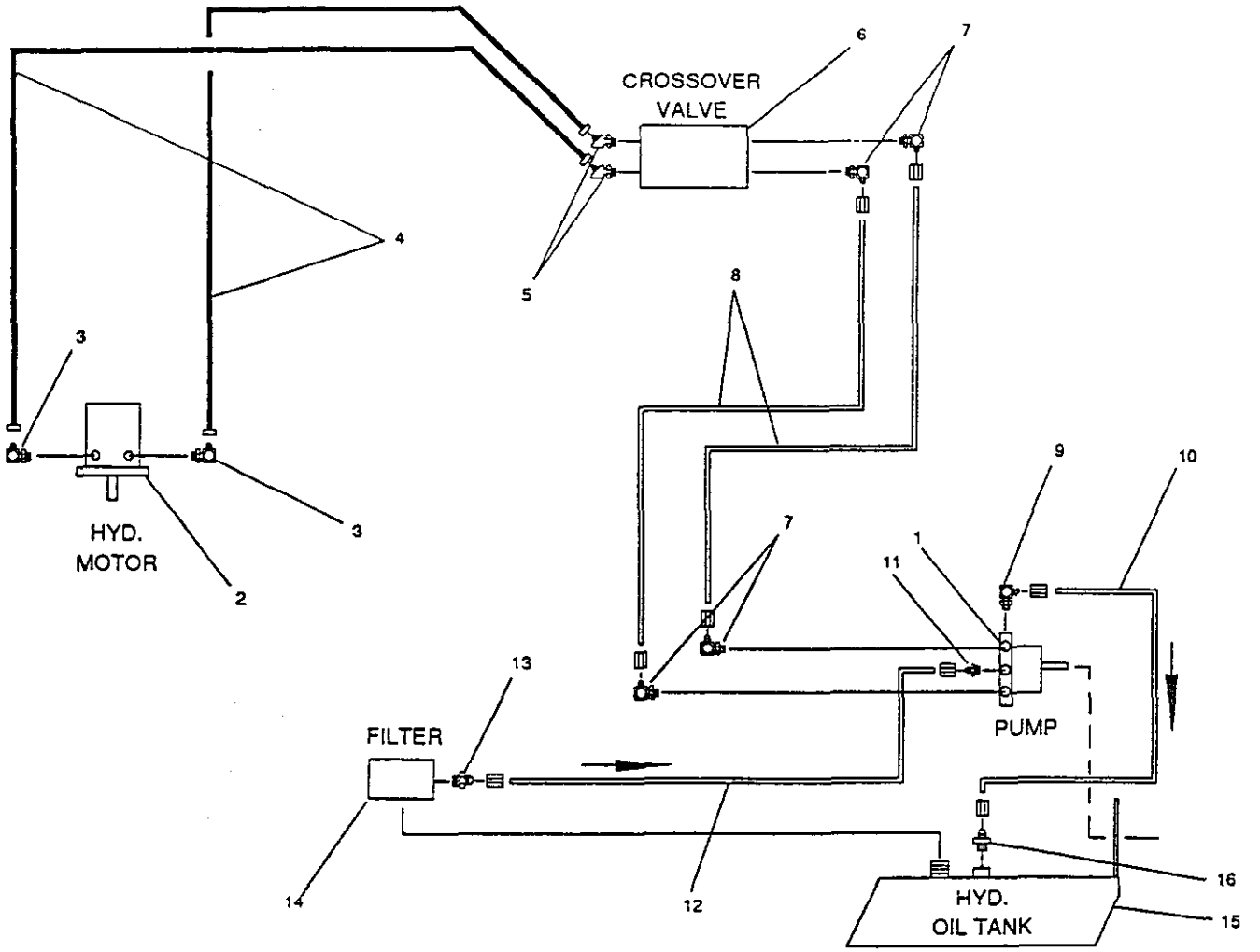

HYDRAULIC SCHEMATIC

182K-018

Ref. No.	Part No.	Description	No. Used
1	01-305-0790	Pump	1
2	01-304-0420	Hydraulic Motor	1
*	01-304-0260	Seal Kit	1
3	01-201-1520	Fitting, 6801-6-10	2
4	01-312-1610	Hyd. Hose, 3/8" x 60	2
5	01-201-2240	Fitting, 6802-6-8	2
6	01-308-0840	Crossover Valve	1
7	01-201-2290	Fitting, 3/4" - 16 O-ring x 3/8" tube	4
8	18-204-2381	Steel Tube, 3/8" x 10"	2
9	01-201-2270	Fitting, 9/16" - 18 O-ring x 3/8" tube	1

Ref. No.	Part No.	Description	No. Used
10	18-204-2371	Steel Tube, 3/8" x 9"	1
11	01-201-2340	Fitting, 7/16" - 20 O-ring x 1/4" tube	1
12	18-204-2361	Steel Tube, 1/4" x 5"	1
13	01-201-2260	Fitting, 3/8" NPT Male x 1/4" tube	1
14	01-317-0070	Filter	1
*	01-317-0100	Element & Seal Kit	1
15	18-205-2401	Hyd. Oil Tank	1
16	01-201-2280	Fitting, 3/8" NPT Male x 3/8" tube	1

* Not Illustrated

PART NUMBER INDEX

Part No.	Description	Pg. No.	Ref. No.	Qty.
---	Key - Rect.	6	10	1
01-113-0160	Bearing	3	10	1
01-113-0200	Bearing	3	6	1
01-151-0040	Cotter Pin	10	6	1
01-151-0040	Cotter Pin	14	16	1
01-151-0060	Cotter Pin	8	8	1
01-151-0100	Cotter Pin	7	14	1
01-153-0160	Roll Pin	5	10	1
01-158-0200	Capscrew - Hex Hd.	15	17	4
01-158-0200	Capscrew - Hex Hd.	9	7	4
01-158-1150	Capscrew - Flat Hd. Socket	3	2	6
01-158-1470	Machine Screw - Rd. Hd.	20	10	2
01-158-1620	Machine Screw - Rd. Hd.	20	14	3
01-158-1630	Machine Screw - Rd. Hd.	20	16	2
01-159-0010	Presto Pin	8	13	1
01-161-0020	Pop Rivet	10	15	1
01-161-0020	Pop Rivet	3	20	8
01-161-0060	Pop Rivet	16	12	18
01-161-0060	Pop Rivet	9	10	12
01-166-0410	Lock Washer	16	8	4
01-166-0410	Lock Washer	18	8	4
01-166-0410	Lock Washer	20	7	2
01-166-0410	Lock Washer	8	20	2
01-166-0500	Flat Washer	15	12	30
01-166-0510	Lock Washer	10	20	16
01-166-0510	Lock Washer	15	13	17
01-166-0510	Lock Washer	16	5	3
01-166-0600	Flat Washer	10	9	5
01-166-0600	Flat Washer	12	13	2
01-166-0600	Flat Washer	15	8	11
01-166-0600	Flat Washer	19	10	2
01-166-0600	Flat Washer	2	7	6
01-166-0600	Flat Washer	4	16	4
01-166-0600	Flat Washer	5	4	14
01-166-0600	Flat Washer	6	19	6
01-166-0600	Flat Washer	7	8	1
01-166-0600	Flat Washer	8	4	8
01-166-0600	Flat Washer	9	3	6
01-166-0610	Lock Washer	10	10	5
01-166-0610	Lock Washer	12	14	2
01-166-0610	Lock Washer	15	9	6
01-166-0610	Lock Washer	19	11	1
01-166-0610	Lock Washer	2	8	6
01-166-0610	Lock Washer	5	5	6
01-166-0610	Lock Washer	6	20	3
01-166-0610	Lock Washer	8	5	4
01-166-0610	Lock Washer	9	4	4
01-166-0800	Flat Washer	10	3	4
01-166-0800	Flat Washer	13	7	6
01-166-0800	Flat Washer	14	13	1
01-166-0800	Flat Washer	7	10	11
01-166-0810	Lock Washer	12	5	4
01-166-0810	Lock Washer	14	14	1
01-166-0810	Lock Washer	17	10	3
01-166-0810	Lock Washer	2	4	1
01-166-0810	Lock Washer	7	11	3
01-166-1000	Flat Washer	3	12	4
01-166-1000	Flat Washer	4	9	4
01-166-1010	Lock Washer	12	8	4
01-166-1010	Lock Washer	4	10	4
01-166-1200	Flat Washer	3	8	4
01-166-1200	Flat Washer	8	11	1
01-168-2010	Machinery Bushing	12	20	3
01-168-3210	Machinery Bushing	3	17	2
01-168-3214	Machinery Bushing	3	21	1
01-169-0130	Lock Washer	20	17	3
01-169-0140	Lock Washer	20	11	2
01-173-0508	Carriage Bolt	10	19	12
01-173-0612	Carriage Bolt	9	17	2
01-173-0816	Carriage Bolt	13	3	4
01-173-0816	Carriage Bolt	14	12	1
01-173-1220	Carriage Bolt	2	11	1
01-175-0130	Capscrew - Hex Hd.	4	7	16
01-175-0140	Capscrew - Hex Hd.	4	13	2
01-178-0404	Capscrew - Hex Hd.	16	9	4
01-178-0404	Capscrew - Hex Hd.	20	8	2
01-178-0404	Capscrew - Hex Hd.	8	19	2
01-178-0406	Capscrew - Hex Hd.	18	7	4
01-178-0504	Capscrew - Hex Hd.	16	6	3
01-178-0506	Capscrew - Hex Hd.	15	11	15
01-178-0508	Capscrew - Hex Hd.	10	16	4
01-178-0608	Capscrew - Hex Hd.	15	7	6
01-178-0608	Capscrew - Hex Hd.	8	17	2
01-178-0608	Capscrew - Hex Hd.	9	2	2
01-178-0610	Capscrew - Hex Hd.	10	13	5
01-178-0610	Capscrew - Hex Hd.	5	3	6
01-178-0610	Capscrew - Hex Hd.	6	18	3
01-178-0612	Capscrew - Hex Hd.	2	6	6
01-178-0612	Capscrew - Hex Hd.	8	2	2
01-178-0614	Capscrew - Hex Hd.	5	14	2
01-178-0616	Capscrew - Hex Hd.	5	8	2
01-178-0620	Capscrew - Hex Hd.	4	4	4
01-178-0622	Capscrew - Hex Hd.	12	12	2
01-178-0644	Capscrew - Hex Hd.	19	9	1
01-178-0652	Capscrew - Hex Hd.	8	10	1
01-178-0660	Capscrew - Hex Hd.	8	26	2
01-178-0812	Capscrew - Hex Hd.	17	9	3
01-178-0812	Capscrew - Hex Hd.	2	5	1
01-178-0816	Capscrew - Hex Hd.	10	7	1
01-178-0816	Capscrew - Hex Hd.	12	4	4
01-178-0816	Capscrew - Hex Hd.	14	3	6
01-178-0816	Capscrew - Hex Hd.	3	16	3
01-178-0816	Capscrew - Hex Hd.	7	12	2
01-178-0824	Capscrew - Hex Hd.	5	16	1
01-178-0832	Capscrew - Hex Hd.	11	3	1
01-178-0840	Capscrew - Hex Hd.	7	16	1
01-178-1016	Capscrew - Hex Hd.	4	8	4
01-178-1020	Capscrew - Hex Hd.	12	6	3
01-178-1020	Capscrew - Hex Hd.	19	2	2
01-178-1024	Capscrew - Hex Hd.	3	11	2
01-178-1040	Capscrew - Hex Hd.	19	6	2
01-178-1232	Capscrew - Hex Hd.	3	7	2
01-182-0832	Capscrew - Hex Hd.	13	5	2
01-188-0518	Hex Nut	10	18	16
01-188-0518	Hex Nut	15	14	15
01-188-0616	Hex Nut	10	4	5
01-188-0616	Hex Nut	12	15	2
01-188-0616	Hex Nut	15	10	5
01-188-0616	Hex Nut	18	3	9
01-188-0616	Hex Nut	19	7	1

* Not Illustrated

PART NUMBER INDEX (Continued)

Part No.	Description	Pg. No.	Ref. No.	Qty.
01-188-0616	Hex Nut	2	9	6
01-188-0616	Hex Nut	4	15	12
01-188-0616	Hex Nut	5	6	8
01-188-0616	Hex Nut	6	21	3
01-188-0616	Hex Nut	7	9	2
01-188-0616	Hex Nut	8	6	2
01-188-0616	Hex Nut	9	5	4
01-188-0813	Hex Nut	11	4	2
01-188-0813	Hex Nut	12	19	4
01-188-0813	Hex Nut	13	6	16
01-188-0813	Hex Nut	14	8	6
01-188-0813	Hex Nut	17	11	3
01-188-0813	Hex Nut	3	5	18
01-188-0813	Hex Nut	5	12	2
01-188-0813	Hex Nut	7	7	7
01-188-1011	Hex Nut	12	9	3
01-188-1011	Hex Nut	19	4	8
01-188-1011	Hex Nut	3	13	4
01-188-1011	Hex Nut	4	11	4
01-188-1210	Hex Nut	11	6	8
01-188-1210	Hex Nut	2	14	1
01-188-1210	Hex Nut	3	9	4
01-188-1210	Hex Nut	8	12	1
01-189-0616	Lock Nut	5	19	2
01-191-0616	Jam Nut	5	18	1
01-191-0616	Jam Nut	7	19	1
01-191-0616	Jam Nut	8	23	6
01-191-0813	Jam Nut	10	8	2
01-191-0813	Jam Nut	14	9	6
01-191-0813	Jam Nut	5	20	2
01-191-0813	Jam Nut	7	18	1
01-191-1210	Jam Nut	11	9	1
01-191-1210	Jam Nut	2	15	1
01-192-0200	Whiz Nut	15	18	4
01-192-0200	Whiz Nut	9	8	4
01-192-0420	Wing Nut	15	16	2
01-192-0490	Hex Nut	20	18	3
01-192-0500	Hex Nut	20	12	2
01-201-1520	Fitting	22	3	2
01-201-2240	Fitting	22	5	2
01-201-2260	Fitting	22	13	1
01-201-2270	Fitting	22	9	1
01-201-2280	Fitting	22	16	1
01-201-2290	Fitting	22	7	4
01-201-2340	Fitting	22	11	1
01-215-0050	Grease Zerk	7	15	2
01-251-0360	Safety Chain	19	8	2
01-256-0140	Handle	9	9	1
01-256-0190	Lever	2	13	1
01-257-0010	Knob	15	15	1
01-257-0010	Knob	16	2	3
01-259-0050	Foam Handle	14	17	1
01-259-0050	Handle Grip	7	3	1
01-260-0710	Bushing	6	5	1
01-260-1630	Sheave	6	1	1
01-260-1650	Bushing	6	2	1
01-260-1660	Bushing	6	9	1
01-260-2000	Bushing	6	12	1
01-260-2010	Sheave	6	11	1
01-260-2020	Sheave	6	8	1
01-260-2060	Sheave	6	4	1
01-261-0400	Spring	11	8	5
01-261-0580	Spring	7	6	2
01-264-0240	Belt	6	14	1
01-264-0880	Belt	6	7	1
01-268-0200	Idler Pulley	7	17	1
01-269-0300	Lug Nut	17	6	10
01-269-1510	Tire	17	5	2
01-269-1520	Wheel	17	13	2
01-270-1350	Rubber Latch	9	11	2
01-270-3370	Engine	4	1	1
01-276-0160	Hitch Pin	14	2	1
01-280-0220	Gas Tank	18	1	1
01-283-0320	Blade	3	3	2
01-285-0260	Attaching Parts Kit	17	*	1
01-285-0340	Hanger Kit	17	7	1
01-285-0610	Axle	17	4	1
01-286-0560	Rubber Mount	16	4	3
01-304-0260	Seal Kit	12	*	1
01-304-0260	Seal Kit	22	*	1
01-304-0420	Hydraulic Motor	12	2	1
01-304-0420	Hydraulic Motor	22	2	1
01-305-0790	Pump	22	1	1
01-305-0790	Pump	5	2	1
01-305-0820	Seal Kit	5	*	1
01-308-0840	Crossover Valve	22	6	1
01-308-0840	Crossover Valve	5	7	1
01-312-1610	Hyd. Hose	22	4	2
01-317-0070	Filter	22	14	1
01-317-0100	Element & Seal Kit	22	*	1
01-506-0020	Decal - Danger	8	15	1
01-506-0030	Decal - Danger	15	19	1
01-506-0260	Decal - Operating Instr.	13	8	1
01-506-0260	Decal - Operating Instr.	9	12	1
01-506-0290	Decal - Danger	14	18	1
01-506-0300	Decal - Danger	14	19	2
01-506-0320	Decal - Rev/N/Forward	10	21	1
01-506-0500	Decal - Toro	13	9	1
01-506-0500	Decal - Toro	9	16	1
01-506-0540	Decal - No Riders	17	12	2
01-506-0560	Decal - Hydraulic Oil	5	17	1
01-506-0700	Decal - Chipper 1820D	15	6	1
01-506-0700	Decal - Chipper 1820D	9	13	1
01-506-0960	Decal - Diesel Only	18	5	1
01-506-1130	Decal - Before Starting	9	15	1
01-506-1140	Decal - Disengage/Engage	9	14	1
01-506-1230	Decal - Danger	9	18	1
01-506-1240	Decal - Door Lock Handle	8	21	1
01-506-1250	Decal - Door Lock Release/ Timer "On-Off"	8	22	1
01-600-0030	Battery Cable	4	*	1
01-600-0160	Battery Cable	4	*	1
01-603-0850	Snap Action Switch	20	15	1
01-603-0860	Solenoid	20	13	1
01-603-0870	Momentary Ground Switch	20	4	1
01-603-0880	Toggle Switch	20	2	1
01-603-0890	Toggle Seal	20	3	1
01-603-0900	Dust Cap	20	5	1
01-606-0370	Wiring Harness	20	*	1
01-607-0010	Tail Light	17	3	1

* Not Illustrated

PART NUMBER INDEX (Continued)

Part No.	Description	Pg. No.	Ref. No.	Qty.
01-607-0020	Tail Light	17	2	1
01-612-0600	Timer	20	9	1
02-276-0100	Pintle Hitch	19	5	1
18-202-0011	Solenoid Assembly	20	*	1
18-204-0451	Pivot Base	2	2	2
18-204-0461	Roller Motor Spacer	12	3	1
18-204-0591	Chute Flange Spacer	14	4	1
18-204-0641	Rotate Stop	2	10	1
18-204-0761	Arm Spacer Top	12	7	6
18-204-0801	Spring Rod	11	7	1
18-204-1061	Side Plate	10	11	1
18-204-1121	Gas Tank Strap	18	4	2
18-204-1181	Cutter Bar Bracket	13	4	2
18-204-1191	Chute Clamp	14	7	2
18-204-1201	Chute Washer	14	6	2
18-204-1271	Directional Spacer	14	5	6
18-204-1391	Shaft Guard	3	19	1
18-204-1471	Feed Guard Flat	10	14	1
18-204-1481	Feed Guard	10	12	4
18-204-1541	Roller Lever Pad	10	2	2
18-204-1731	Idler Rod	7	4	1
18-204-1781	Gas Tank Strap	18	2	4
18-204-1821	Deflector	14	10	1
18-204-1921	Corner Guard	10	17	1
18-204-1961	Bearing Spacer	3	14	1
18-204-1971	Bearing Spacer	3	15	1
18-204-1981	Roller Spacer	11	10	1
18-204-1991	Roller Spacer	11	11	4
18-204-2121	Spacer	5	15	2
18-204-2161	Rotate Washer	2	12	1
18-204-2171	Key - Sq.	6	3	1
18-204-2181	Idler Spacer	7	13	2
18-204-2231	Roller Guard	12	11	1
18-204-2331	Valve Rod	10	5	1
18-204-2331	Valve Rod	5	13	1
18-204-2361	Steel Tube	22	12	1
18-204-2371	Steel Tube	22	10	1
18-204-2381	Steel Tube	22	8	2
18-204-2731	Motor Mount Spacer	4	3	2
18-204-2751	Motor Mount Cushion	4	5	8
18-204-2961	Key - Sq.	6	13	1
18-204-3021	Small Bearing Spacer	3	18	1
18-204-3111	Cutter Bar	13	1	1
18-204-3121	Blade Spacer	3	4	2
18-204-3131	Blade Spacer	3	*	4
18-204-3281	Throttle Cable Mount	4	12	1
18-204-3431	Radiator Screen	16	11	1
18-204-3451	Fuel Filter Mount	4	17	1
18-204-3521	Door Box Cover	20	6	1
18-204-3521	Door Box Cover	8	18	1
18-204-3551	Solenoid Lock Stop	20	19	1
18-204-3601	Door Guide	8	24	1
18-204-3611	Door Guide Spacer	8	25	1
18-204-3631	Door Seal Plate	8	3	1
18-205-0123	Chipper Disc	3	1	1
18-205-0161	Spring Bracket	11	2	1
18-205-0171	Pivot End Cap	2	3	1
18-205-0182	Wrapper Top	8	9	1
18-205-0193	Chute	14	1	1
18-205-0202	Motor Plate	12	1	1
18-205-0212	Roller Pivot Arm	11	1	1
18-205-0221	Spring Rod Pivot Bolt	11	5	2
18-205-0233	Drum Cover	8	1	1
18-205-0251	Disc Guard	12	10	1
18-205-0262	Feed Roller	12	16	1
18-205-0271	Cutter Bar Spacer	13	2	1
18-205-0281	Roller Lever	10	1	1
18-205-0291	Rod Pivot	5	11	1
18-205-0291	Rod Pivot	7	5	1
18-205-0301	Hinge Pin	8	7	1
18-205-0311	Wing Nut	14	15	1
18-205-0321	Roller Bolt	12	17	1
18-205-0361	Deflector Pin	14	11	1
18-205-0381	Cleanout Lid	8	14	1
18-205-2211	Bottom Belt Stop	6	17	1
18-205-2391	Pump Lever	5	9	1
18-205-2401	Hyd. Oil Tank	22	15	1
18-205-2401	Hydraulic Oil Tank	5	1	1
18-205-2803	Chipper Main Frame	2	1	1
18-205-2811	Belt Guard	9	1	1
18-205-2823	Trailer Main Frame	17	1	1
18-205-2831	Top Lid	15	5	1
18-205-2841	Top Cowling	15	4	1
18-205-2851	Idler Handle	7	2	1
18-205-2861	Belt Idler	7	1	1
18-205-2871	Top Belt Stop	6	16	1
18-205-2881	Lower Belt Stop	6	15	1
18-205-2891	Motor Mount	4	6	2
18-205-2901	Motor Mount	4	2	2
18-205-2911	Front Guard	15	1	1
18-205-2921	Radiator Cowling Mount	15	2	1
18-205-3001	Jack	17	8	1
18-205-3011	Louvered Cover	9	6	1
18-205-3311	Fuel Pump Cover	18	6	1
18-205-3321	Radiator Screen Frame	16	10	1
18-205-3341	Front Cowling	15	3	1
18-205-3351	Control Box	16	3	1
18-205-3361	Control Box Cover	16	7	1
18-205-3372	Door Control Box	20	1	1
18-205-3372	Door Control Box	8	16	1
18-205-3391	Access Panel	16	1	1
31-004-0941	Hitch Bracket	19	3	1
31-005-0172	Hitch	19	1	1
41-004-5201	Key - Sq.	12	18	1
41-004-5241	Key - Sq.	6	6	1
48-004-3831	Battery Hold Down	4	14	1

* Not Illustrated

PRODUCT CHANGES

In an effort to make improvements available to TORO owners as quickly as possible minor changes are incorporated into Toro's products from time to time that do not become immediately shown in the Parts Catalog. If such a change has been made in your unit which is not reflected in your manual see your TORO Distributor or an Authorized Service Dealer for information and part numbers.

IDENTIFICATION & ORDERING

MODEL AND NUMBERS

The COMMERCIAL CHIPPER 1820D has two identification numbers; a model number and a serial number. The two numbers are stamped on a plate which is located on the chipper housing. In any correspondence concerning the 1820D, supply model and serial numbers to assure that correct information and replacement parts are obtained.

To order replacement parts from your TORO Distributor or an Authorized Service Dealer, supply the following information:

1. Model and serial number of the 1820D.
2. Part number description and the quantity of part (s) desired.

NOTE: Do not order by reference number if a parts catalog is being used: use the PART NUMBER.

TABLE OF CONTENTS

Description	Page	Description	Page
Main Frame Mounting	2	Cutter Bar	13
Chipper Disc Assembly	3	Chute Assembly	14
Engine Mounting	4	Engine Cowling	15 - 16
Hydraulic Oil Tank Assembly	5	Trailer Assembly	17
Drive Belts	6	Fuel Tank Assembly	18
Idler Assembly	7	Hitch Assembly	19
Drum Cover	8	Door Lock Box Assembly	20
Belt Guard & Louvered Cover	9	Door Lock Box Wiring Diagram	21
Roller Lever & Feed Table	10	Hydraulic Schematic	22
Roller Pivot Arm	11	Part Number Index	23 - 25
Feed Roller	12		

MAINTENANCE RECORD

Date								

MAINTENANCE RECORD

Date								