FORM NO. 01-505-1080.4

TORO®

MODEL NO. 44575 - 30104 & UP

PARTS CATALOG

COMMERCIAL CHIPPER 1820D

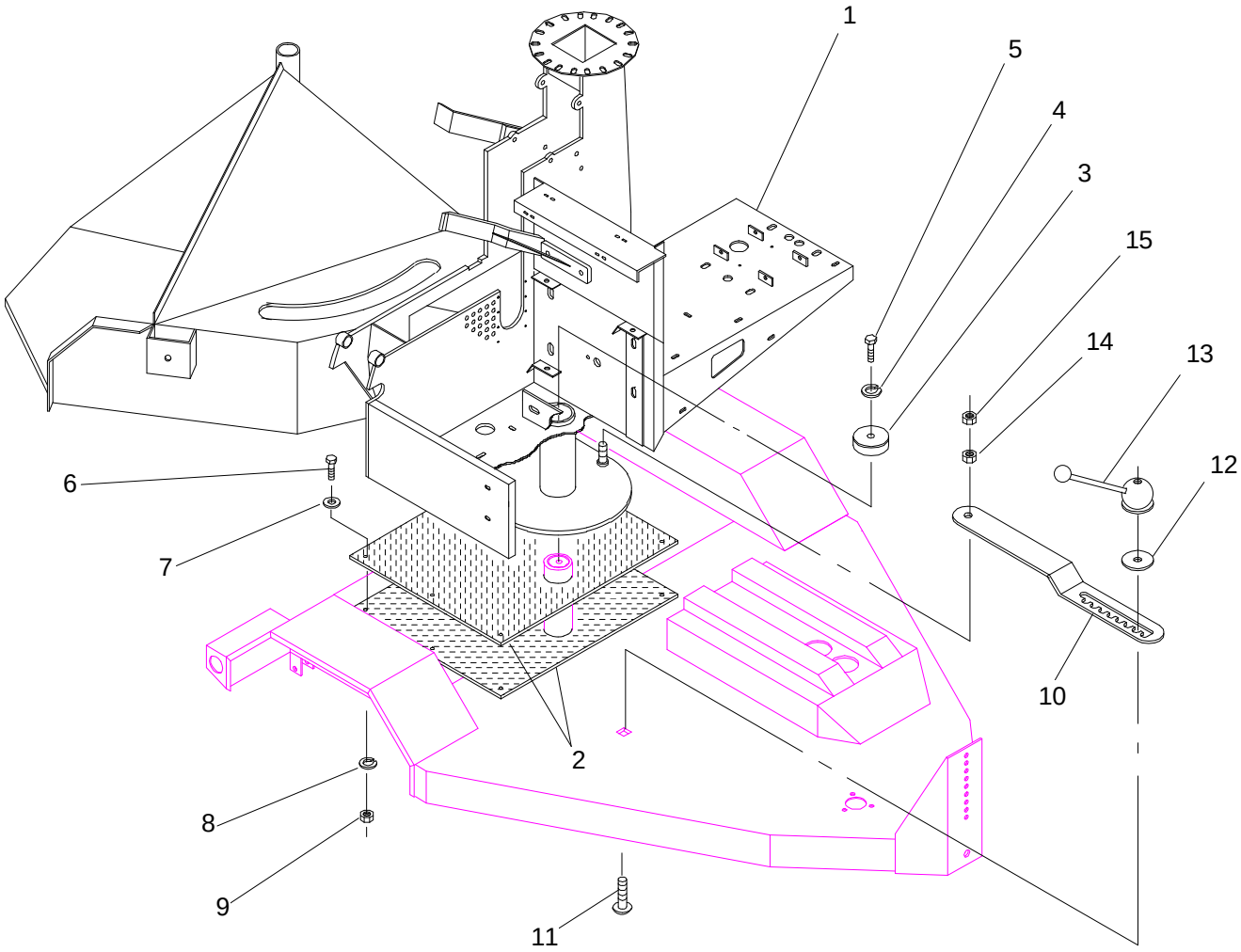

MAIN FRAME MOUNTING

182K-017

Ref.	Part No.	Description	No.
1	18-205-2803	Chipper Main Frame	1
2	18-204-0451	Pivot Base	2
3	18-205-0171	Pivot End Cap	1
4	3253-7	Lock Washer	1
5	325-6	Capscrew - Hex Hd.	1
6	323-8	Capscrew - Hex Hd.	6
7	3256-4	Flat Washer	6
8	3253-5	Lock Washer	6

Ref.	Part No.	Description	No.
9	3217-7	Hex Nut	6
10	18-204-0641	Rotate Stop	1
11	01-173-1220	Carriage Bolt	1
12	18-204-2161	Rotate Washer	1
13	01-256-0190	Lever	1
14	3217-12	Hex Nut	1
15	3218-7	Jam Nut	1

© The TORO Company - 1993
All Rights Reserved

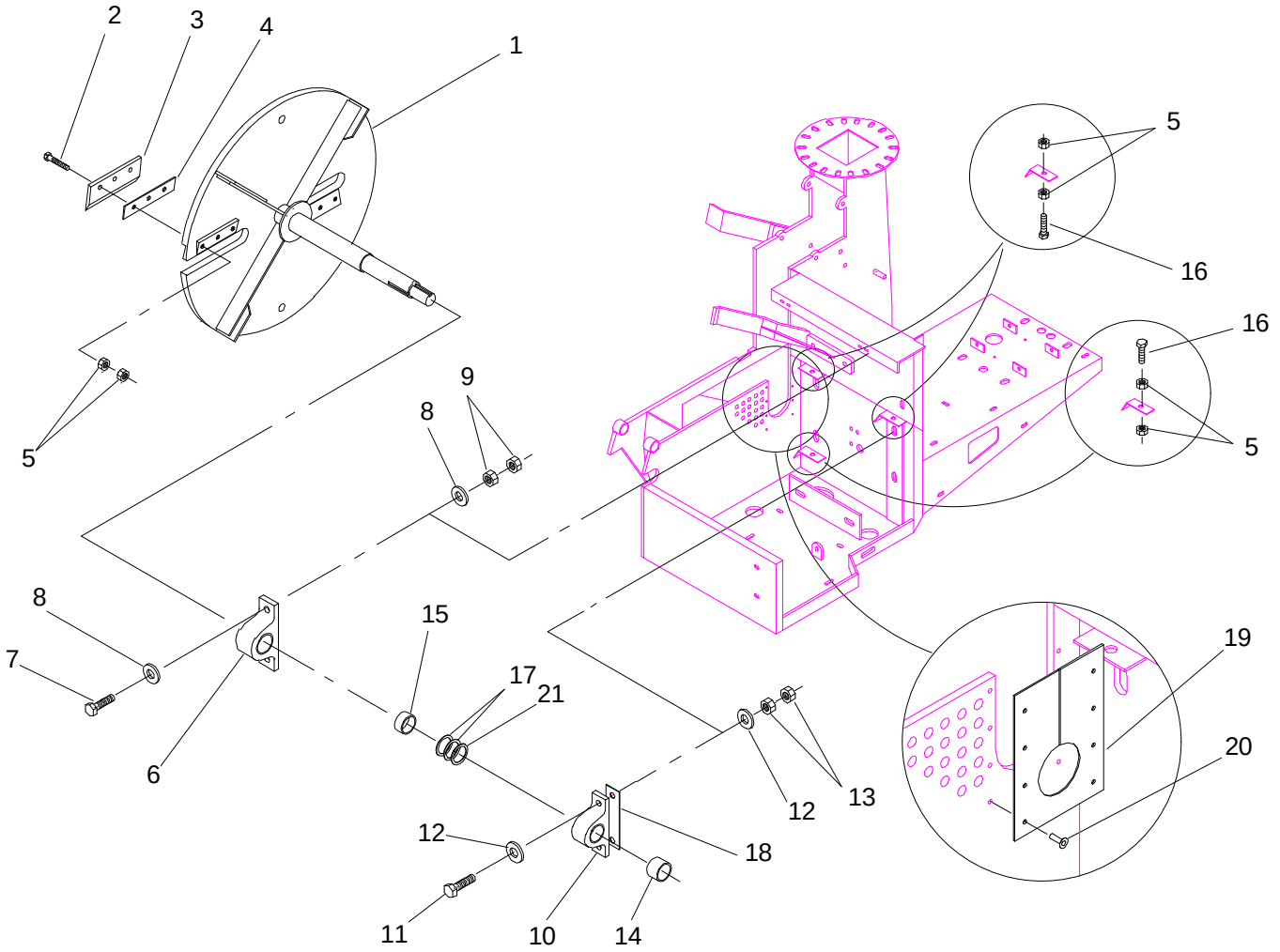

CHIPPER DISC ASSEMBLY

182K-008

Ref. No.	Part No.	Description	No. Used
1	18-205-0123	Chipper Disc	1
2	01-158-1150	Capscrew - Flat Hd. Socket	6
3	01-283-0320	Blade	2
4	18-204-3121	Blade Spacer, 10 ga.	2
*	18-204-3131	Blade Spacer, 22 ga. (use only when necessary)	4
5	3217-9	Hex Nut	18
6	01-113-0200	Bearing.	1
7	328-7	Capscrew - Hex Hd.	2
8	01-166-1200	Flat Washer, 3/4"	4
9	3217-12	Hex Nut	4
10	01-113-0160	Bearing	1
11	327-9	Capscrew - Hex Hd.	2

Ref. No.	Part No.	Description	No. Used
12	3256-7	Flat Washer	4
13	3217-11	Hex Nut	4
14	18-204-1961	Bearing Spacer (long)	1
15	18-204-1971	Bearing Spacer (short)	1
16	325-8	Capscrew - Hex Hd.	3
17	01-168-3210	Machinery Bushing	2(var)
18	18-204-3021	Small Bearing Spacer	1(var)
19	18-204-1391	Shaft Guard	1
20	01-161-0020	Pop Rivet	8
21	01-168-3214	Machinery Bushing	1(var)

* Not Illustrated

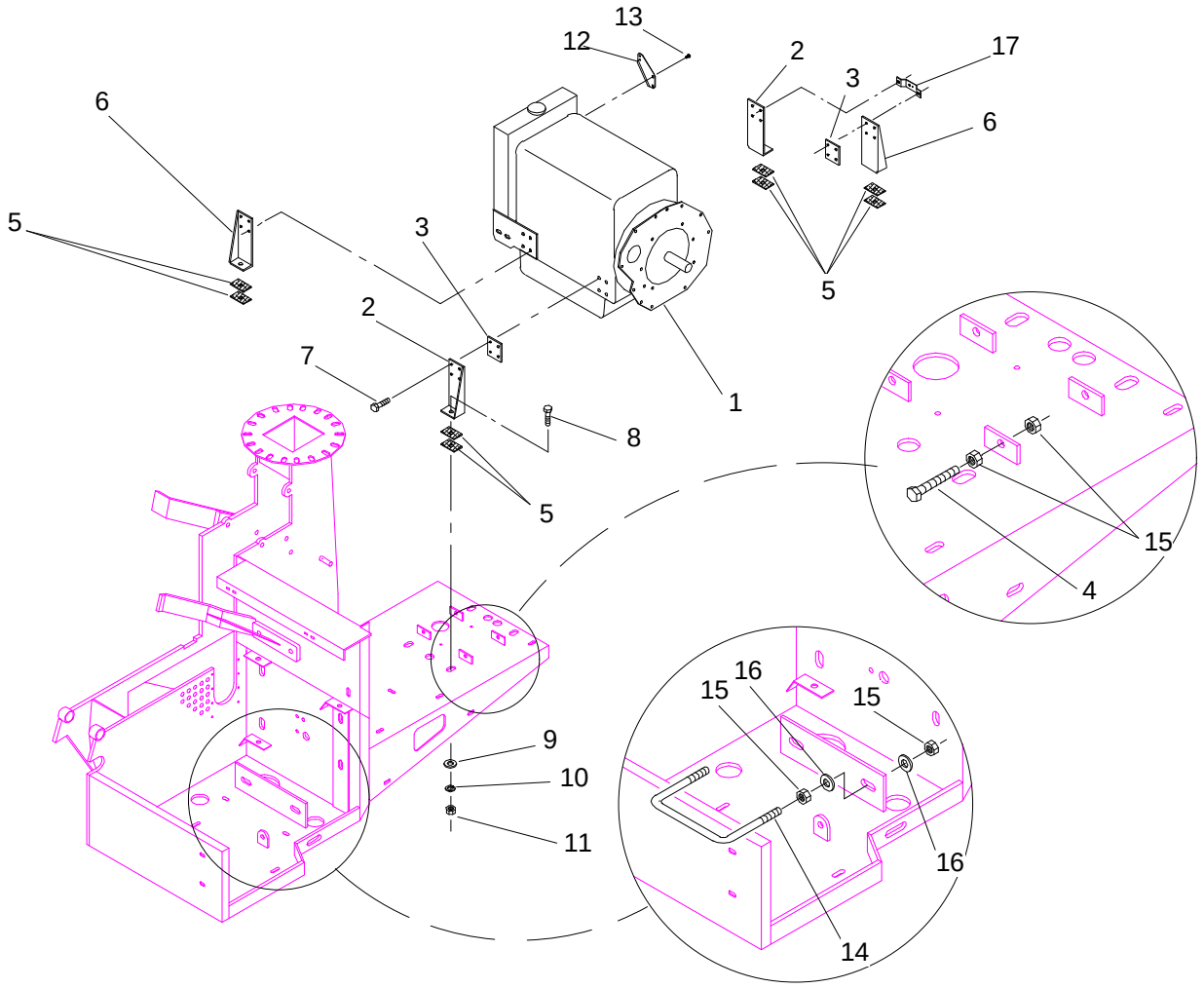

ENGINE MOUNTING

182K-009

Ref. No.	Part No.	Description	No. Used
1	01-270-3370	Engine	1
*	01-600-0030	Battery Cable-Pos	1
*	01-600-0160	Battery Cable-Neg	1
2	18-205-2901	Motor Mount - RH	2
3	18-204-2731	Motor Mount Spacer	2
4	323-12	Capscrew - Hex Hd.	4
5	18-204-2751	Motor Mount Cushion	8
6	18-205-2891	Motor Mount - LH	2
7	01-175-0130	Capscrew - Hex Hd.	16
8	327-6	Capscrew - Hex Hd.	4

Ref. No.	Part No.	Description	No. Used
9	3256-7	Flat Washer	4
10	3253-8	Lock Washer	4
11	3217-11	Hex Nut	4
12	18-204-3281	Throttle Cable Mount	1
13	01-175-0140	Capscrew - Hex Hd.	2
14	48-004-3831	Battery Hold Down	1
15	3217-7	Hex Nut	12
16	3256-4	Flat Washer	4
17	18-204-3451	Fuel Filter Mount	1

* Not Illustrated

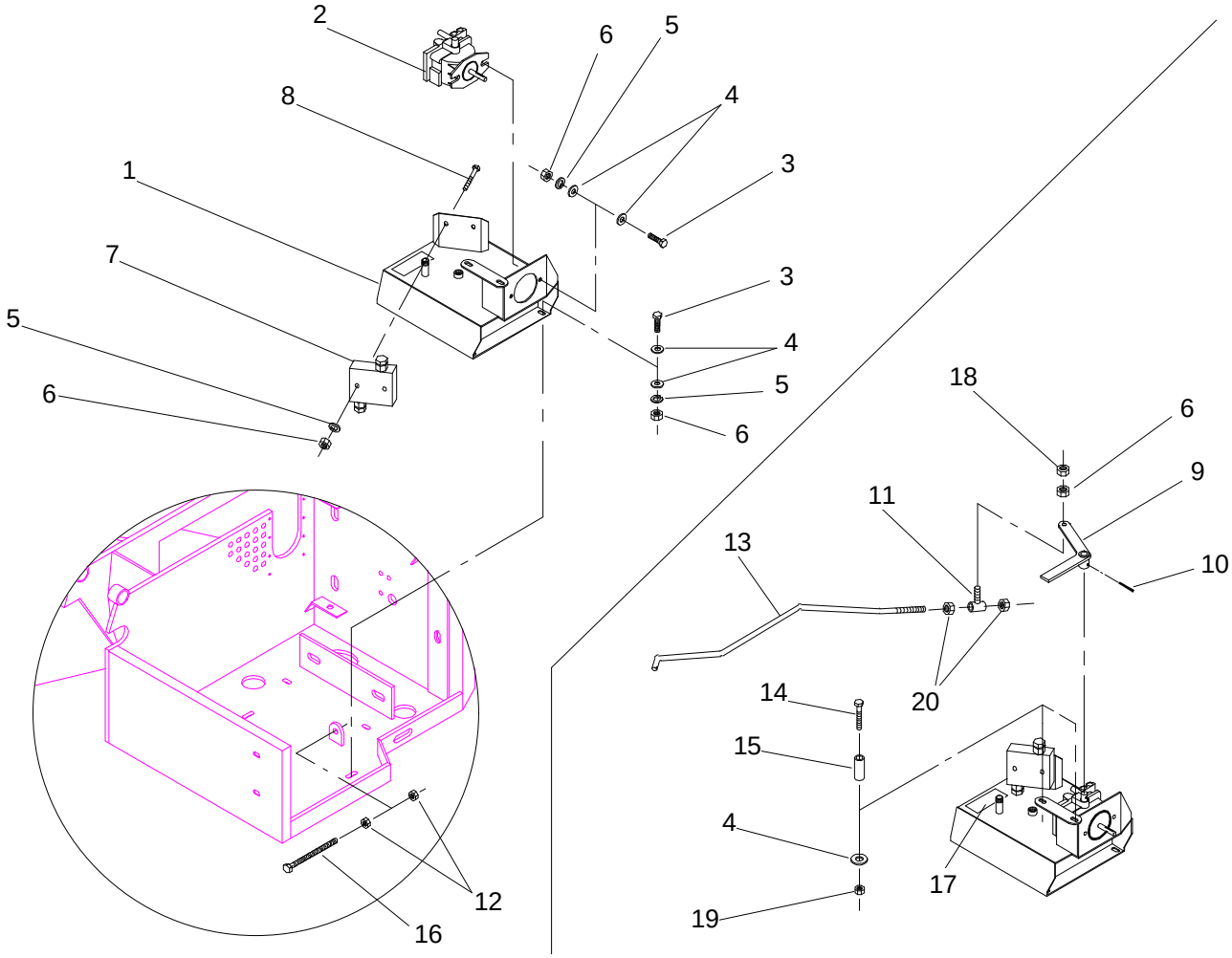

HYDRAULIC OIL TANK ASSEMBLY

182K-007

Ref. No.	Part No.	Description	No. Used
1	18-205-2401	Hydraulic Oil Tank	1
2	01-305-0790	Pump	1
*	01-305-0820	Seal Kit	1
3	323-7	Capscrew - Hex Hd.	6
4	3256-4	Flat Washer	14
5	3253-5	Lock Washer	6
6	3217-7	Hex Nut	8
7	01-308-0840	Crossover Valve	1
8	323-10	Capscrew - Hex Hd.	2
9	18-205-2391	Pump Lever	1
10	32121-16	Roll Pin	1

Ref. No.	Part No.	Description	No. Used
11	18-205-0291	Rod Pivot	1
12	3217-9	Hex Nut	2
13	18-204-2331	Valve Rod	1
14	323-9	Capscrew - Hex Hd.	2
15	18-204-2121	Spacer	2
16	325-12	Capscrew - Hex Hd.	1
17	01-506-0560	Decal - Hydraulic Oil	1
18	3218-3	Jam Nut	1
19	3296-22	Lock Nut	2
20	3218-5	Jam Nut	2

* Not Illustrated

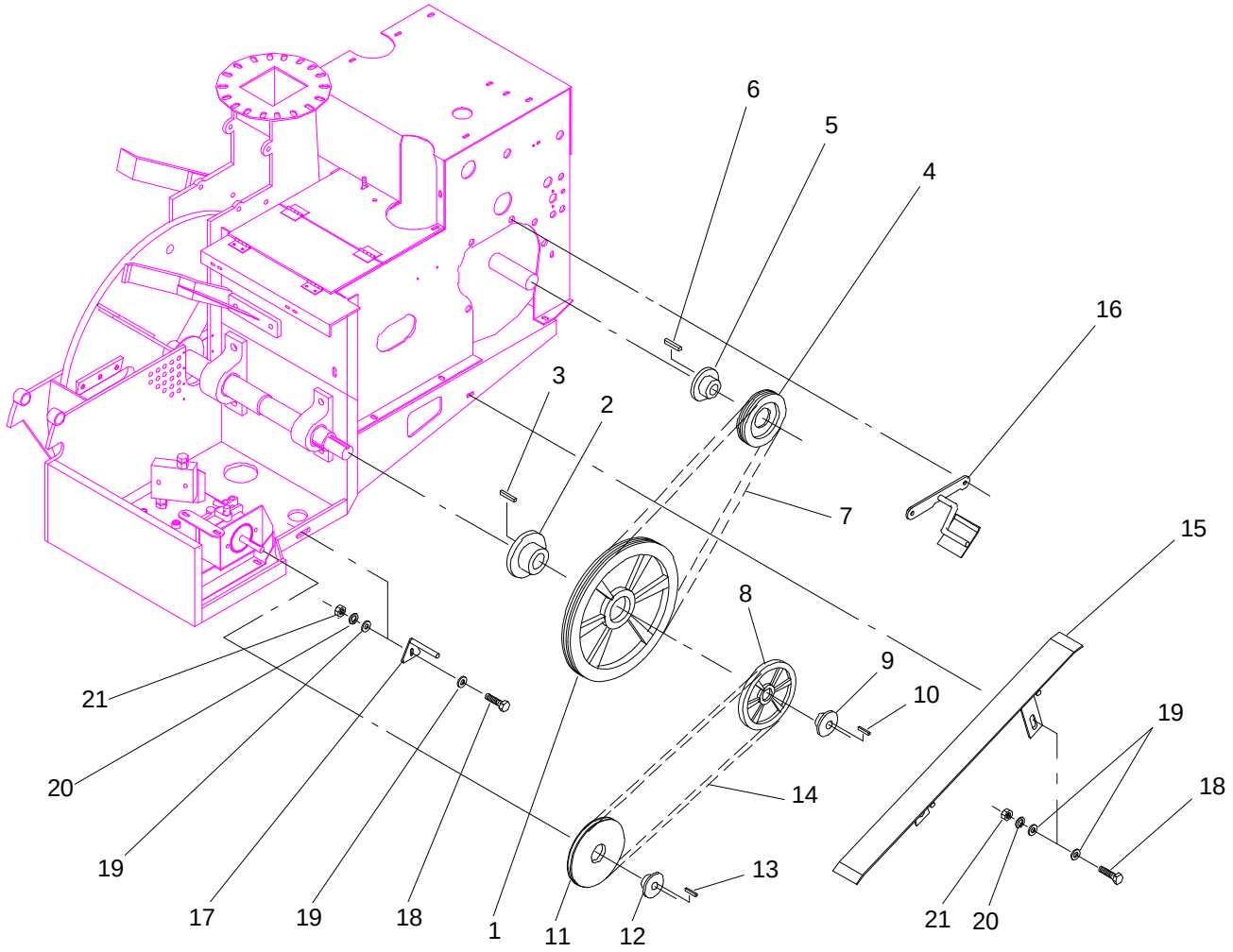

DRIVE BELTS

182K-010

Ref. No.	Part No.	Description	No. Used
1	01-260-1630	Sheave	1
2	01-260-1650	Bushing	1
3	18-204-2171	Key - Sq.	1
4	01-260-2060	Sheave	1
5	01-260-0710	Bushing	1
6	41-004-5241	Key - Sq.	1
7	01-264-0880	Belt	1
8	01-260-2020	Sheave	1
9	01-260-1660	Bushing (Incl. Ref #10)	1
10	---	Key	1
11	01-260-2010	Sheave	1
12	01-260-2000	Bushing	1

Ref. No.	Part No.	Description	No. Used
13	18-204-2961	Key - Sq.	1
14	01-264-0240	Belt	1
15	18-205-2881	Lower Belt Stop	1
16	18-205-2871	Top Belt Stop	1
17	18-205-2211	Bottom Belt Stop	1
18	323-7	Capscrew - Hex Hd.	3
19	3256-4	Flat Washer	6
20	3253-5	Lock Washer	3
21	3217-7	Hex Nut	3

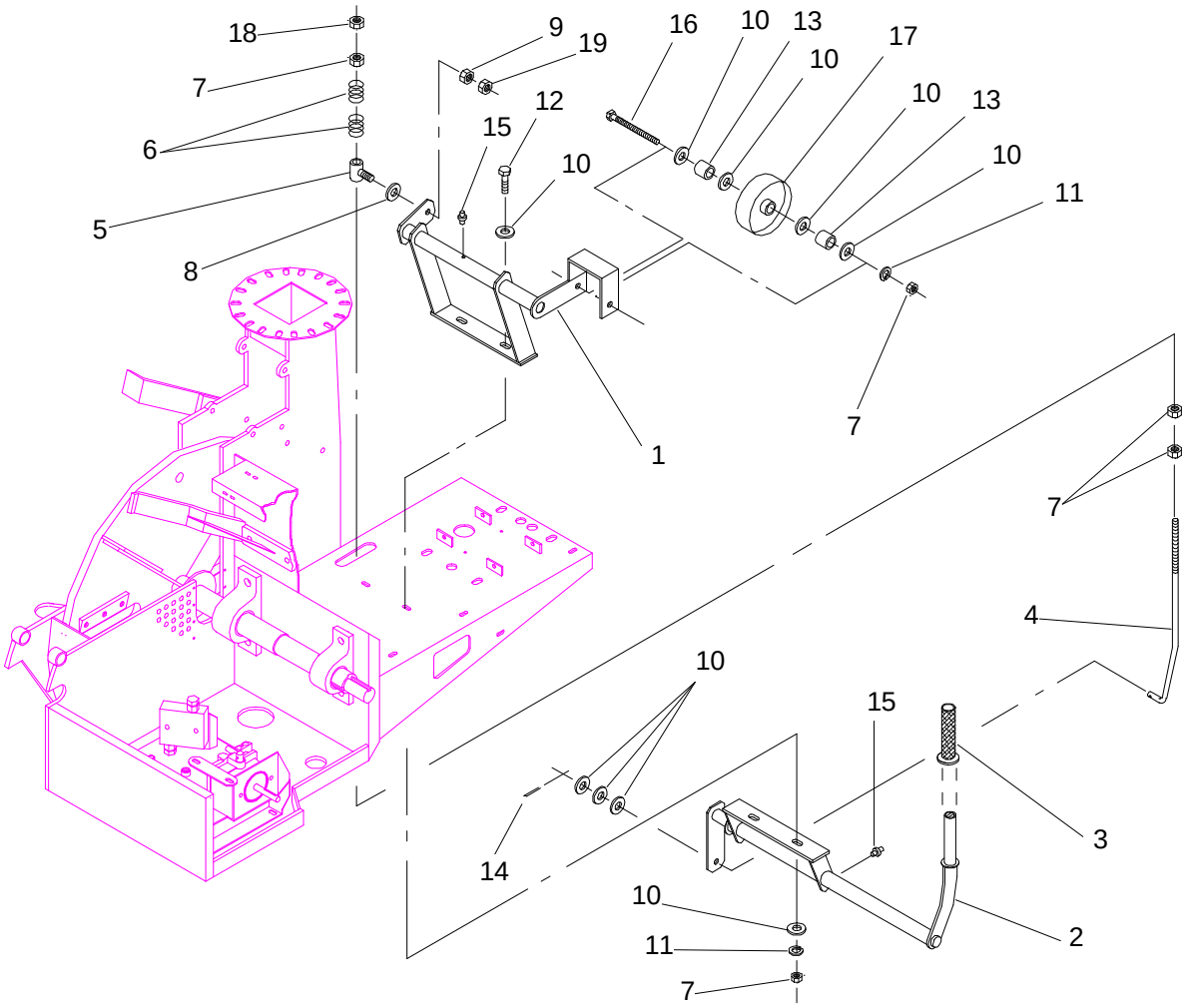

IDLER ASSEMBLY

182K-011

Ref. No.	Part No.	Description	No. Used
1	18-205-2861	Belt Idler	1
2	18-205-2851	Idler Handle	1
3	01-259-0050	Handle Grip	1
4	18-204-1731	Idler Rod	1
5	18-205-0291	Rod Pivot	1
6	01-261-0580	Spring	2
7	3217-9	Hex Nut	7
8	3256-4	Flat Washer	1
9	3217-7	Hex Nut	2
10	3256-6	Flat Washer	11
11	3253-7	Lock Washer	3

Ref. No.	Part No.	Description	No. Used
12	325-8	Capscrew - Hex Hd.	2
13	18-204-2181	Idler Spacer	2
14	3272-21	Cotter Pin	1
15	01-215-0050	Grease Zerk	2
16	325-19	Capscrew - Hex Hd.	1
17	01-268-0200	Idler Pulley	1
18	3218-5	Jam Nut	1
19	3218-3	Jam Nut	1

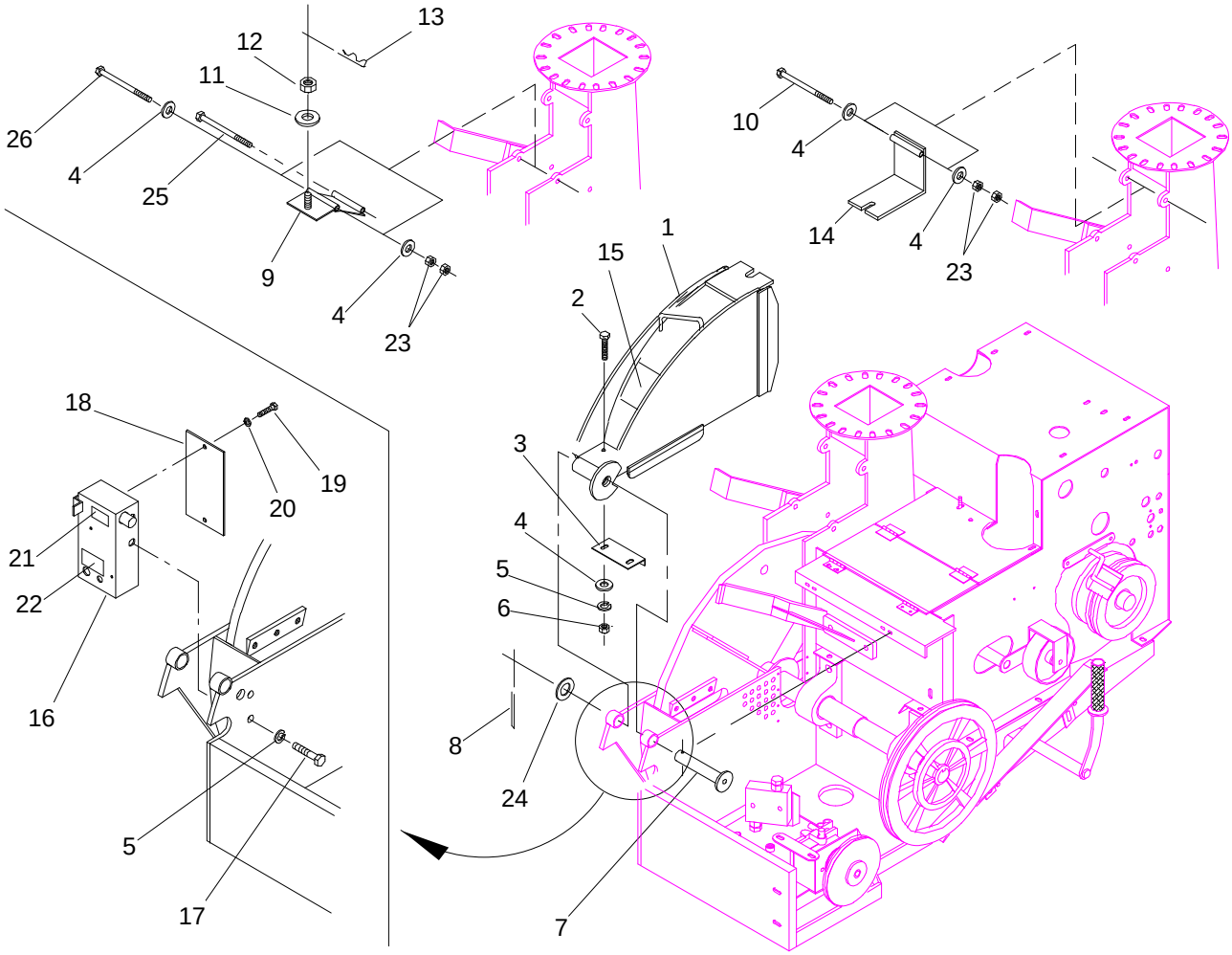

DRUM COVER

182K-002

Ref. No.	Part No.	Description	No. Used
1	18-205-3823	Drum Cover	1
2	323-4	Capscrew - Hex Hd.	2
3	18-204-3631	Door Seal Plate	1
4	3256-4	Flat Washer	8
5	3253-5	Lock Washer	4
6	3217-7	Hex Nut	2
7	18-205-0301	Hinge Pin	1
8	3272-23	Cotter Pin	1
9	18-205-0182	Wrapper Top	1
10	323-26	Capscrew - Hex Hd.	1
11	01-166-1200	Flat Washer	1
12	3217-12	Hex Nut	1
13	01-159-0010	Presto Pin	1
14	18-205-0381	Cleanout Lid	1

Ref. No.	Part No.	Description	No. Used
15	01-506-0020	Decal - Danger	1
16	18-205-3372	Door Control Box	1
17	323-6	Capscrew - Hex Hd.	2
18	18-204-3521	Door Box Cover	1
19	321-2	Capscrew - Hex Hd.	2
20	3253-3	Lock Washer	2
21	01-506-1240	Decal - Door Lock Handle	1
22	01-506-1250	Decal - Door Lock Release/ Timer "On-Off"	1
23	3218-3	Jam Nut	6
24	01-168-1614	Machinery Bushing	1
25	323-36	Capscrew - Hex Hd.	1
26	01-178-0660	Capscrew - Hex Hd.	1

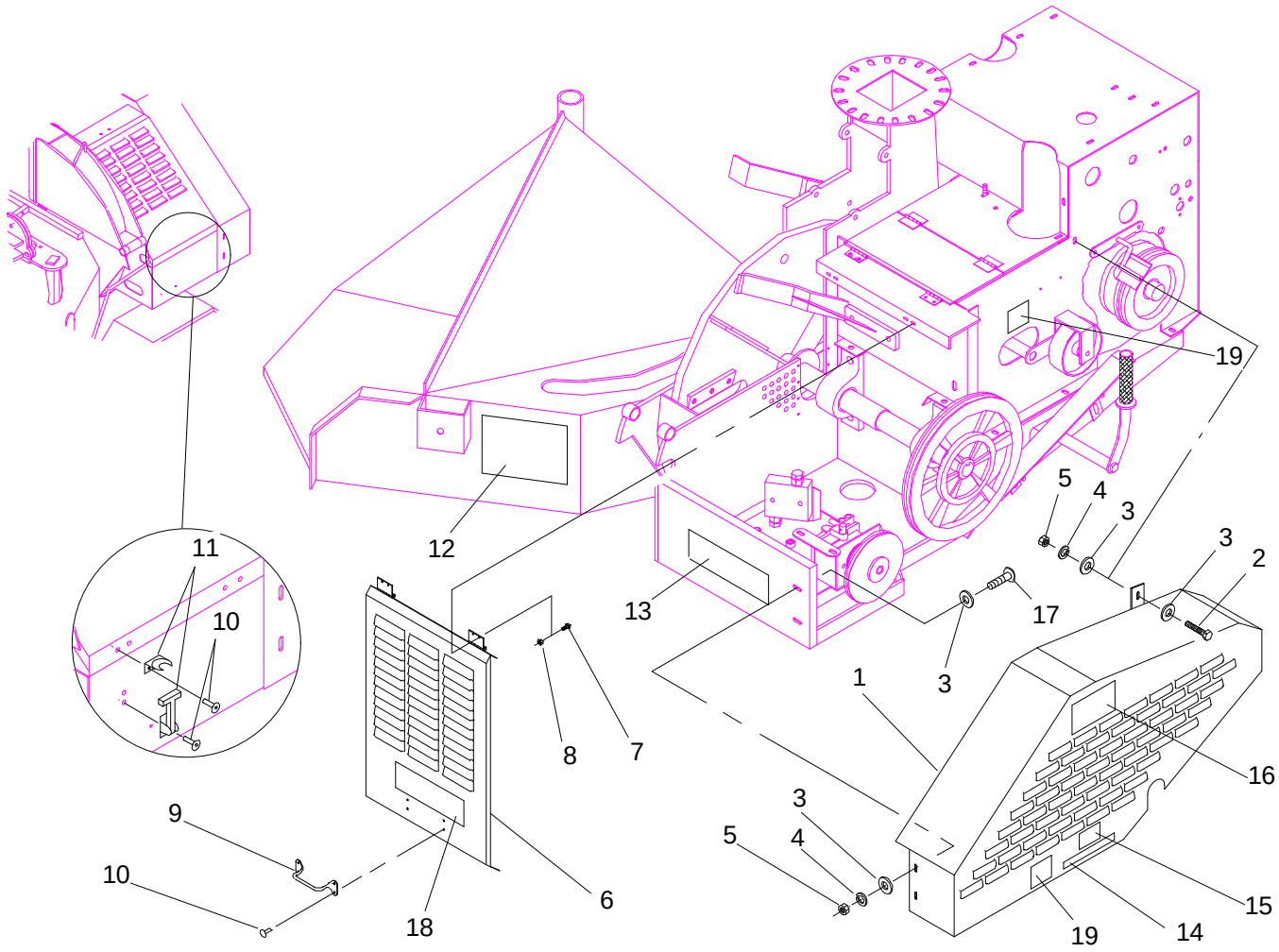

BELT GUARD & LOUVERED COVER

182K-001

Ref. No.	Part No.	Description	No. Used
1	18-205-2811	Belt Guard	1
2	323-6	Capscrew - Hex Hd.	2
3	3256-4	Flat Washer	6
4	3253-5	Lock Washer	4
5	3217-7	Hex Nut	4
6	18-205-3011	Louvered Cover	1
7	01-158-0200	Capscrew - Hex Hd.	4
8	01-192-0200	Whiz Nut	4
9	01-256-0140	Handle	1
10	01-161-0060	Pop Rivet	12
11	01-270-1350	Rubber Latch	2

Ref. No.	Part No.	Description	No. Used
12	01-506-0260	Decal - Operating Instr.	1
13	01-506-0700	Decal - Chipper 1820D	1
14	01-506-1140	Decal - Disengage/Engage	1
15	01-506-1130	Decal - Before Starting	1
16	01-506-0500	Decal - Toro	1
17	3231-4	Carriage Bolt	2
18	01-506-1230	Decal - Danger	1
19	01-506-0040	Decal - Danger	2

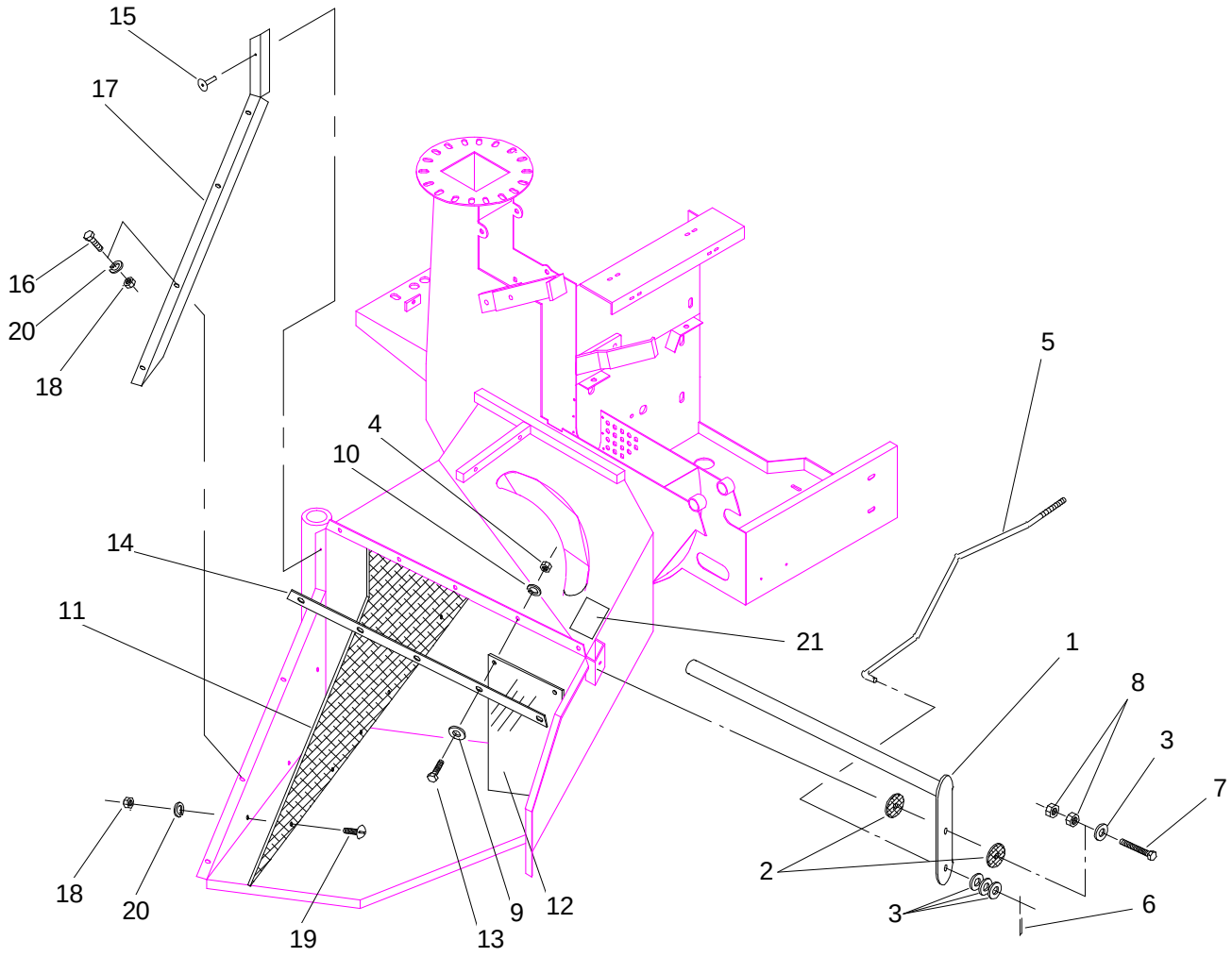

ROLLER LEVER & FEED TABLE

182K-003

Ref. No.	Part No.	Description	No. Used
1	18-205-0281	Roller Lever	1
2	18-204-1541	Roller Lever Pad	2
3	3256-6	Flat Washer	4
4	3217-7	Hex Nut	5
5	18-204-2331	Valve Rod	1
6	3272-11	Cotter Pin	1
7	325-8	Capscrew - Hex Hd.	1
8	3218-5	Jam Nut	2
9	3256-4	Flat Washer	5
10	3253-5	Lock Washer	5
11	18-204-1061	Side Plate	1
12	18-204-1481	Feed Guard	4

Ref. No.	Part No.	Description	No. Used
13	323-7	Capscrew - Hex Hd.	5
14	18-204-1471	Feed Guard Flat	1
15	01-161-0020	Pop Rivet	1
16	322-5	Capscrew - Hex Hd.	4
17	18-204-1921	Corner Guard	1
18	3217-6	Hex Nut	16
19	3230-2	Carriage Bolt	12
20	3253-4	Lock Washer	16
21	01-506-0320	Decal - Rev/N/Forward	1

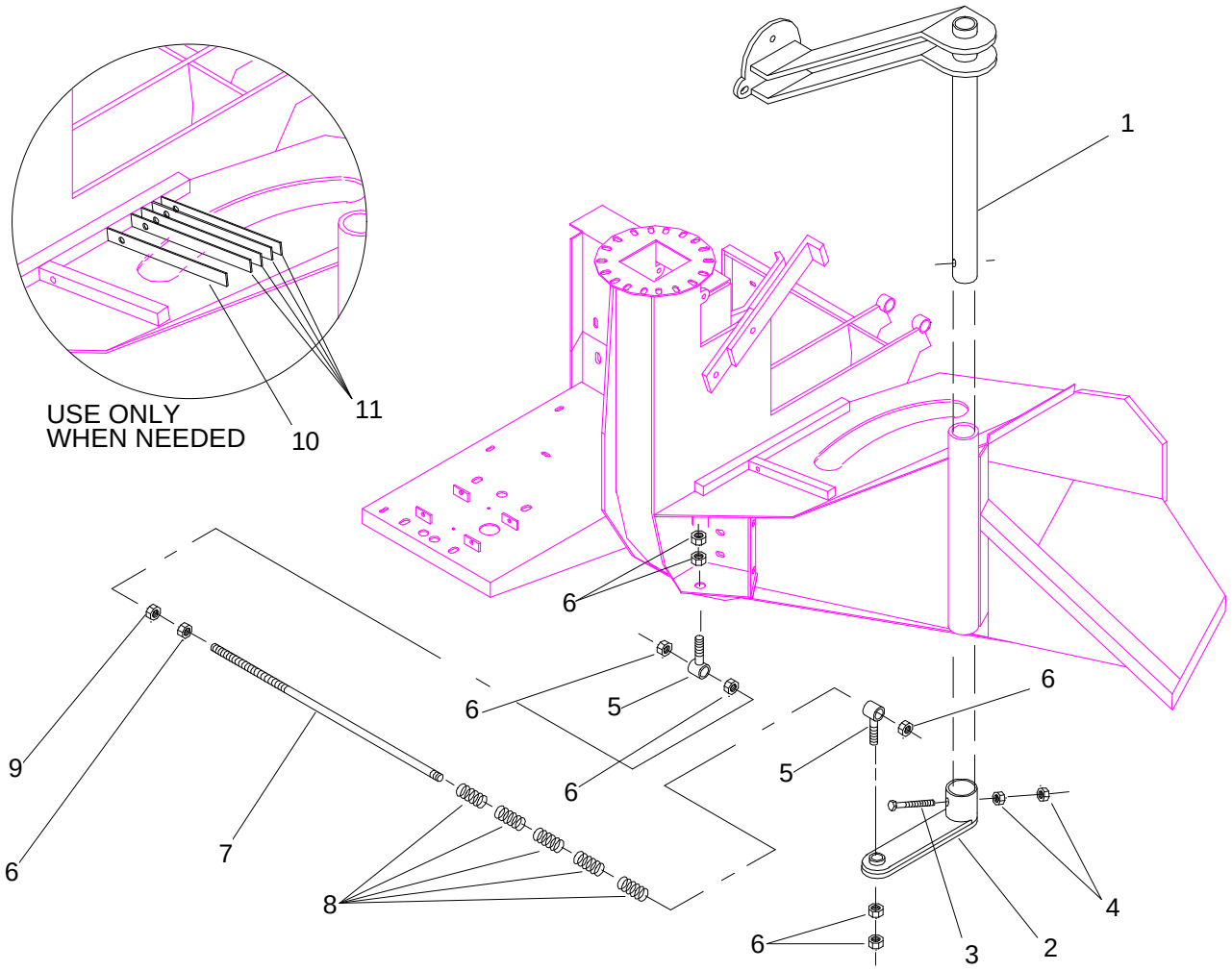

ROLLER PIVOT ARM

182K-005

Ref. No.	Part No.	Description	No. Used
1	18-205-0212	Roller Pivot Arm	1
2	18-205-0161	Spring Bracket	1
3	325-17	Capscrew - Hex Hd.	1
4	3217-9	Hex Nut	2
5	18-205-0221	Spring Rod Pivot Bolt	2
6	3217-12	Hex Nut	8
7	18-204-0801	Spring Rod	1

Ref. No.	Part No.	Description	No. Used
8	01-261-0400	Spring	5
9	3218-7	Jam Nut	1
10	18-204-1981	Roller Spacer	1
11	18-204-1991	Roller Spacer	4

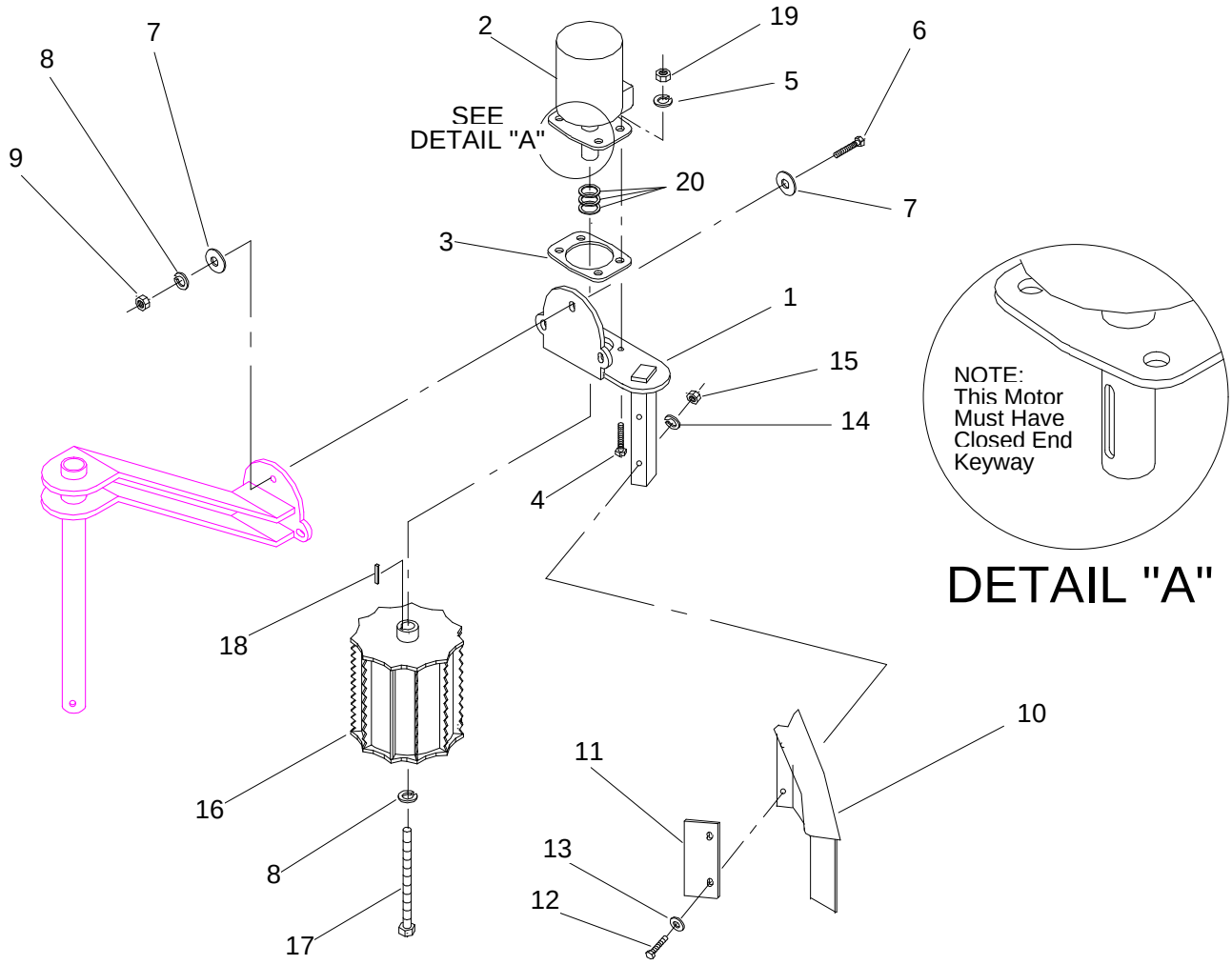

FEED ROLLER

182K-004

Ref. No.	Part No.	Description	No. Used
1	18-205-0202	Motor Plate	1
2	01-304-0420	Hydraulic Motor	1
*	01-304-0260	Seal Kit	1
3	18-204-0461	Roller Motor Spacer	1
4	325-8	Capscrew - Hex Hd.	4
5	3253-7	Lock Washer	4
6	327-7	Capscrew - Hex Hd.	3
7	18-204-0761	Arm Spacer Top	6
8	3253-8	Lock Washer	4
9	3217-11	Hex Nut	3
10	18-205-0251	Disc Guard	1

Ref. No.	Part No.	Description	No. Used
11	18-204-2231	Roller Guard	1
12	323-13	Capscrew - Hex Hd.	2
13	3256-4	Flat Washer	2
14	3253-5	Lock Washer	2
15	3217-7	Hex Nut	2
16	18-205-0262	Feed Roller	1
17	18-205-0321	Roller Bolt	1
18	41-004-5201	Key - Sq.	1
19	3217-9	Hex Nut	4
20	01-168-2010	Machinery Bushing	3(var)

* Not Illustrated

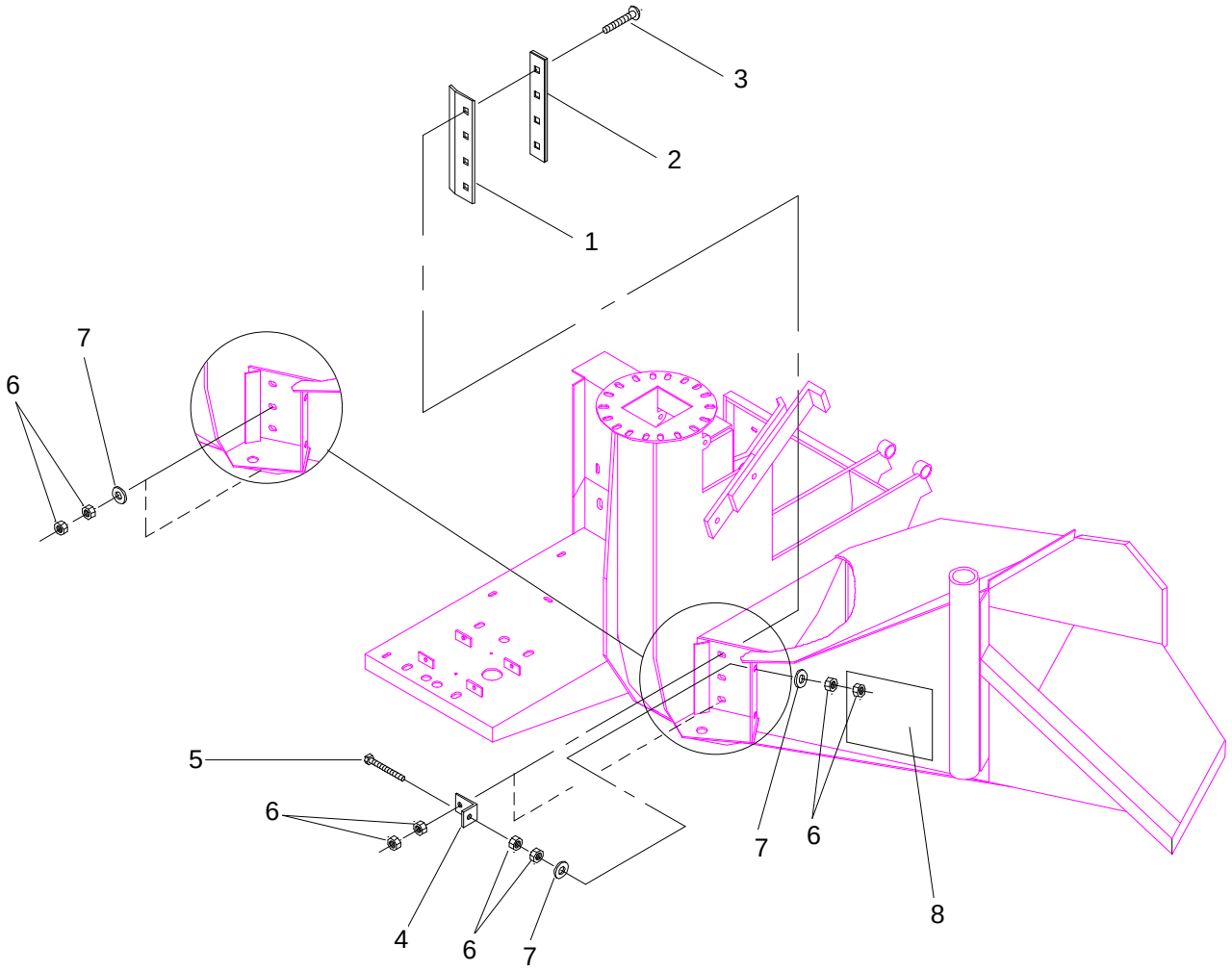

CUTTER BAR ASSEMBLY

182K-006

Ref. No.	Part No.	Description	No. Used
1	18-204-3111	Cutter Bar	1
2	18-205-0271	Cutter Bar Spacer	1
3	3233-4	Carriage Bolt	4
4	18-204-1181	Cutter Bar Bracket	2
5	01-182-0832	Capscrew - Hex Hd.	2

Ref. No.	Part No.	Description	No. Used
6	3217-9	Hex Nut	16
7	3256-6	Flat Washer	6
8	01-506-0260	Decal - Operating Instr.	1
9	01-506-0500	Decal - Toro	1

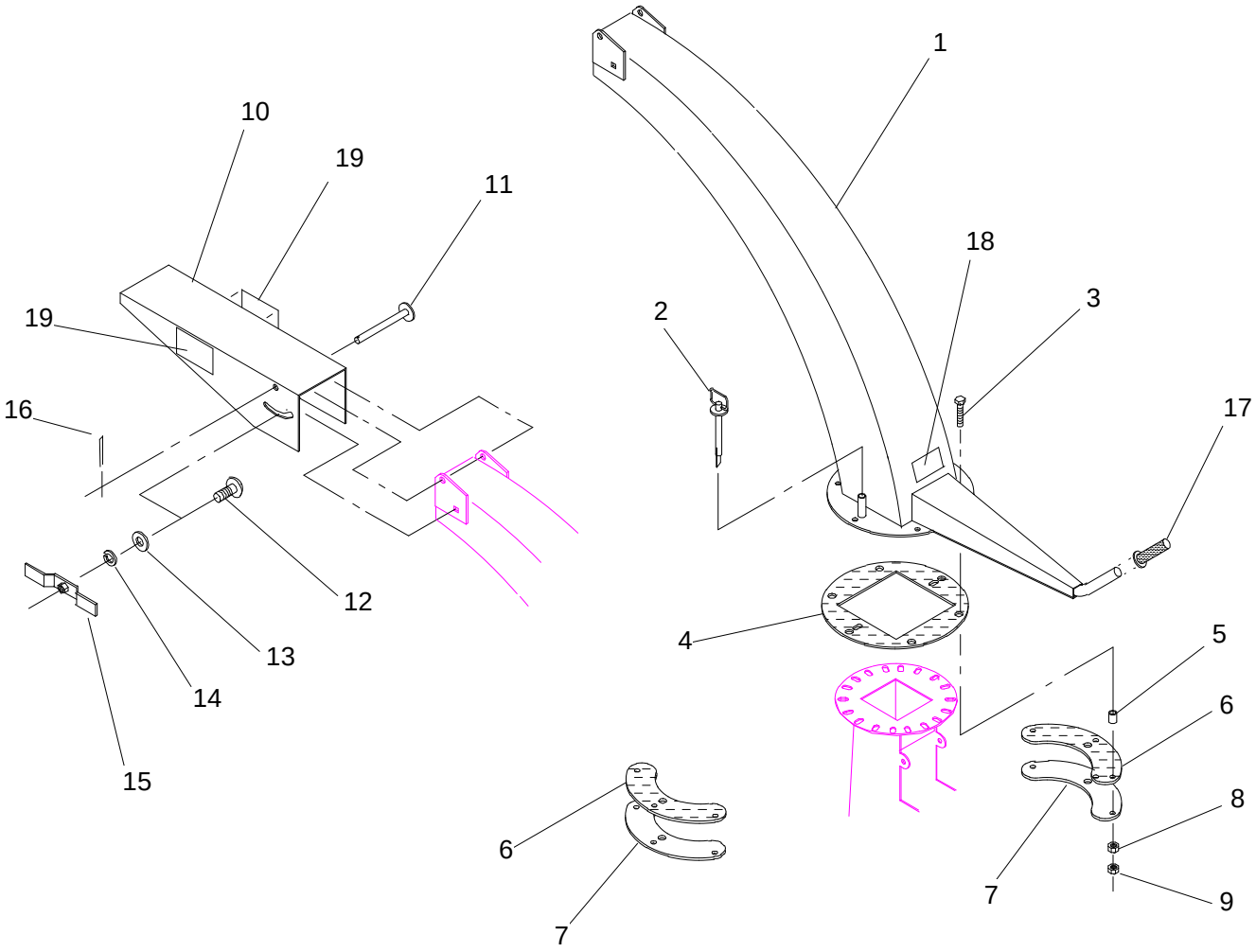

CHUTE ASSEMBLY

182K-013

Ref. No.	Part No.	Description	No. Used
1	18-205-0193	Chute	1
2	01-276-0160	Hitch Pin	1
3	325-8	Capscrew - Hex Hd.	6
4	18-204-0591	Chute Flange Spacer	1
5	18-204-1271	Directional Spacer	6
6	18-204-1201	Chute Washer	2
7	18-204-1191	Chute Clamp	2
8	3217-9	Hex Nut	6
9	3218-5	Jam Nut	6
10	18-204-1821	Deflector	1
11	18-205-0361	Deflector Pin	1

Ref. No.	Part No.	Description	No. Used
12	3233-4	Carriage Bolt	1
13	3256-6	Flat Washer	1
14	3253-7	Lock Washer	1
15	18-205-0311	Wing Nut	1
16	3272-11	Cotter Pin	1
17	01-259-0050	Foam Handle	1
18	01-506-0290	Decal - Danger	1
19	01-506-0300	Decal - Danger	2

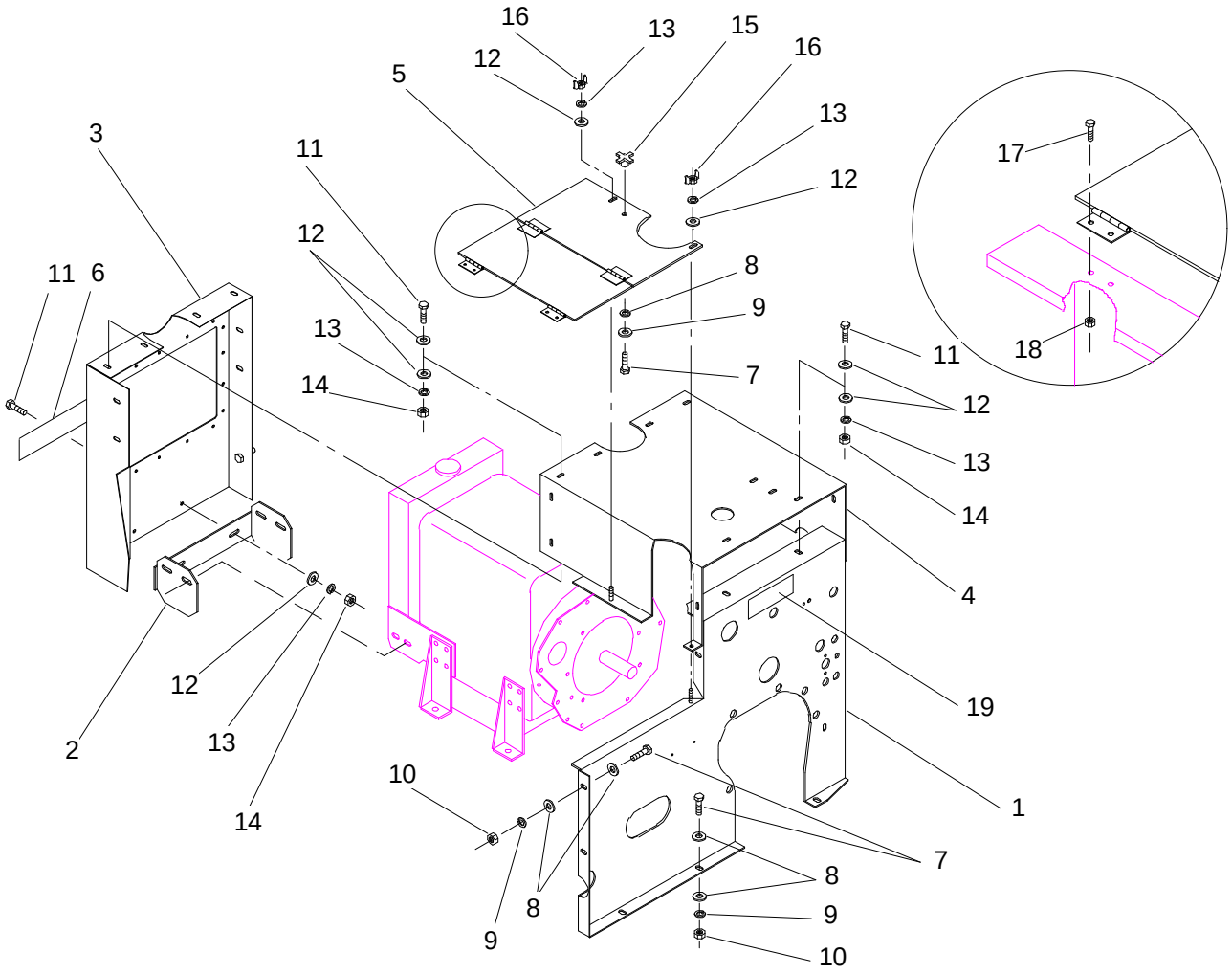

ENGINE COWLING

182K-012

Ref. No.	Part No.	Description	No. Used
1	18-205-2911	Front Guard	1
2	18-205-2921	Radiator Cowling Mount	1
3	18-205-3341	Front Cowling	1
4	18-205-2841	Top Cowling	1
5	18-205-2831	Top Lid	1
6	01-506-0700	Decal - Chipper 1820D	1
7	323-6	Capscrew - Hex Hd.	6
8	3256-4	Flat Washer	11
9	3253-5	Lock Washer	6
10	3217-7	Hex Nut	5
11	322-3	Capscrew - Hex Hd.	15

Ref. No.	Part No.	Description	No. Used
12	3256-3	Flat Washer	30
13	3253-4	Lock Washer	17
14	3217-6	Hex Nut	15
15	01-257-0010	Knob	1
16	32103-2	Wing Nut	2
17	01-158-0200	Capscrew - Hex Hd.	4
18	01-192-0200	Whiz Nut	4
19	01-506-0030	Decal - Danger	1

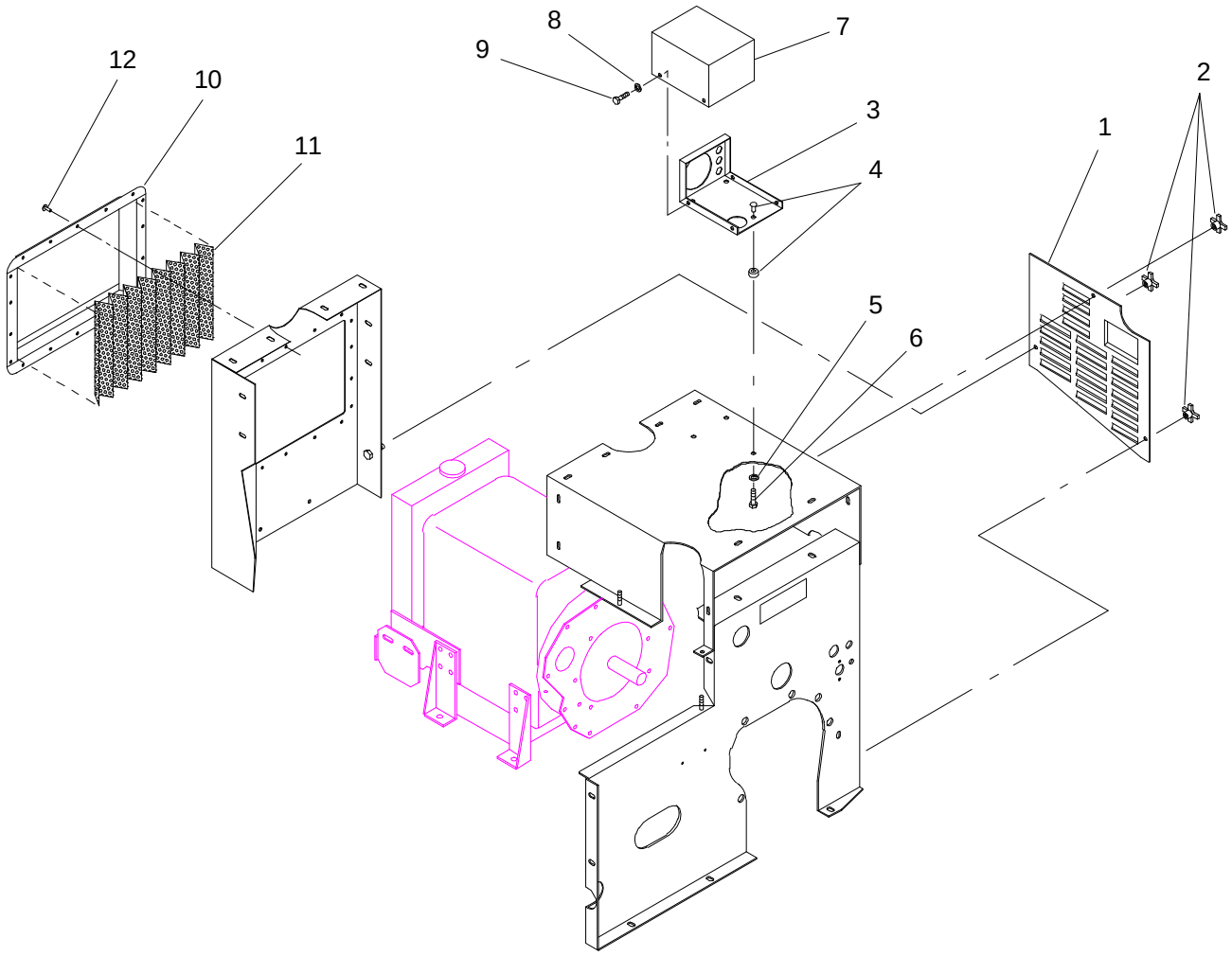

ENGINE COWLING (Continued)

182K-019

Ref. No.	Part No.	Description	No. Used
1	18-205-3391	Access Panel	1
2	01-257-0010	Knob	3
3	18-205-3351	Control Box	1
4	01-286-0560	Rubber Mount	3
5	3253-4	Lock Washer	3
6	322-1	Capscrew - Hex Hd.	3

Ref. No.	Part No.	Description	No. Used
7	18-205-3361	Control Box Cover	1
8	3253-3	Lock Washer	4
9	321-2	Capscrew - Hex Hd.	4
10	18-205-3321	Radiator Screen Frame	1
11	18-204-3431	Radiator Screen	1
12	01-161-0060	Pop Rivet	18

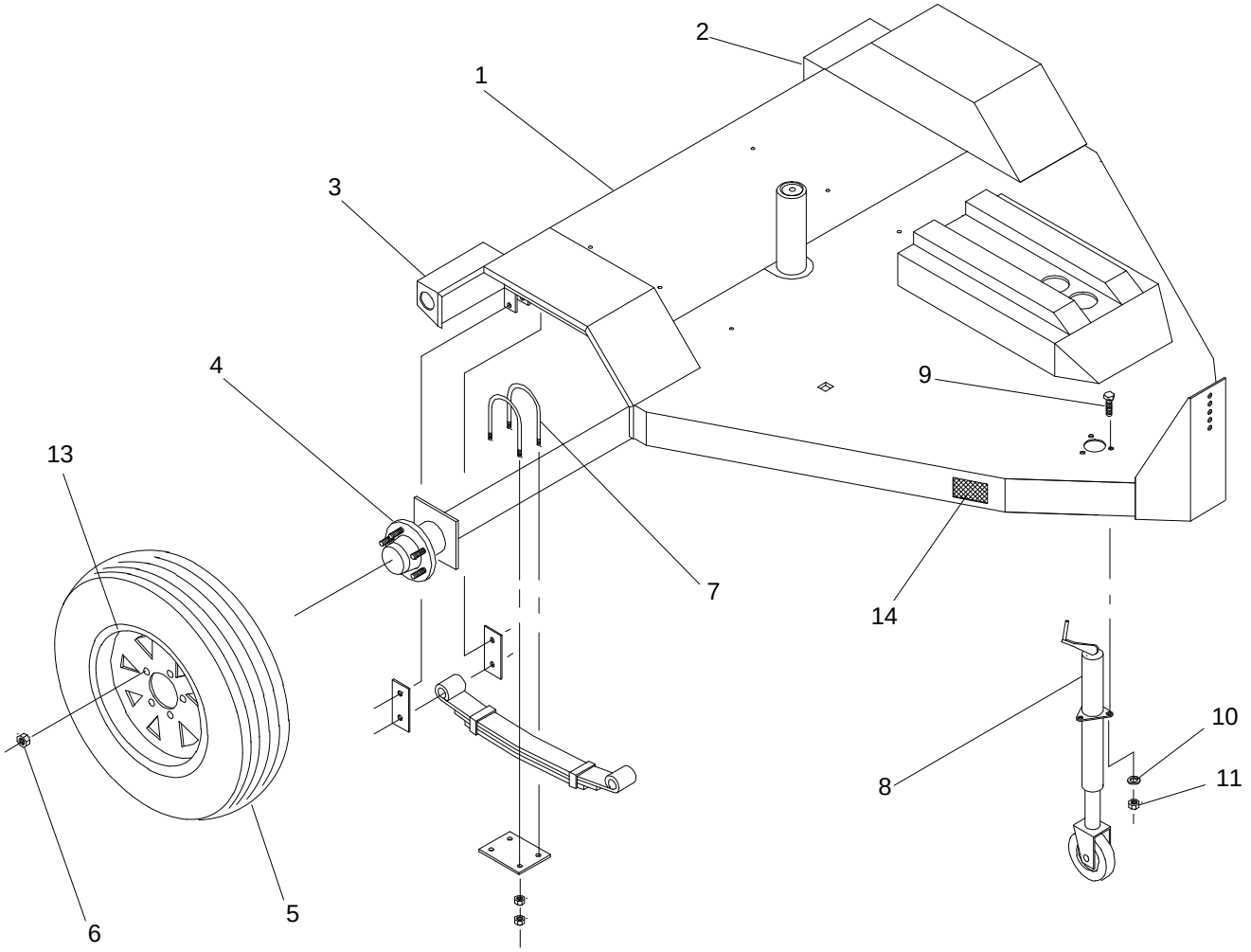

TRAILER ASSEMBLY

182K-014

Ref. No.	Part No.	Description	No. Used
1	18-205-2823	Trailer Main Frame	1
2	01-607-0020	Tail Light, L.H.	1
3	01-607-0010	Tail Light, R.H.	1
4	01-285-0610	Axle	1
5	01-269-1510	Tire	2
6	01-269-0300	Lug Nut	10
7	01-285-0340	Hanger Kit	1
*	01-285-0260	Attaching Parts Kit	1
8	18-205-3001	Jack	1

Ref. No.	Part No.	Description	No. Used
9	325-6	Capscrew - Hex Hd.	3
10	3253-7	Lock Washer	3
11	3217-9	Hex Nut	3
12	01-506-0540	Decal - No Riders	2
13	01-269-1520	Wheel	2
14	01-607-0030	Clearance Light	2
*	01-607-0090	Trailer Connector	1
*	01-607-0110	Trailer Connector	1

* Not Illustrated

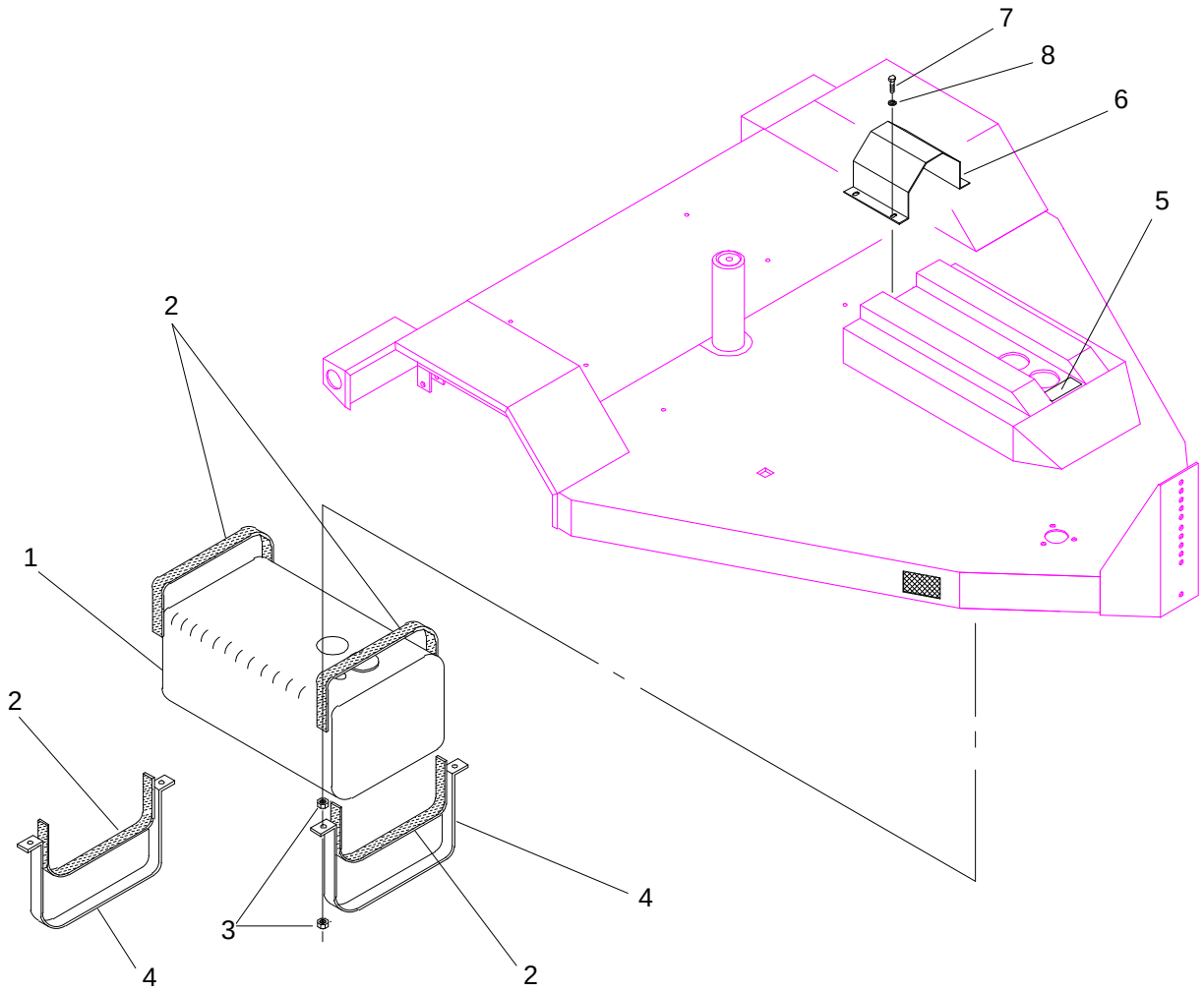

FUEL TANK MOUNTING

182K-015

Ref. No.	Part No.	Description	No. Used
1	01-280-0220	Gas Tank	1
2	18-204-1781	Gas Tank Strap	4
3	3217-7	Hex Nut	9
4	18-204-1121	Gas Tank Strap	2

Ref. No.	Part No.	Description	No. Used
5	01-506-0960	Decal - Diesel Only	1
6	18-205-3311	Fuel Pump Cover	1
7	321-4	Capscrew - Hex Hd.	4
8	3253-3	Lock Washer	4

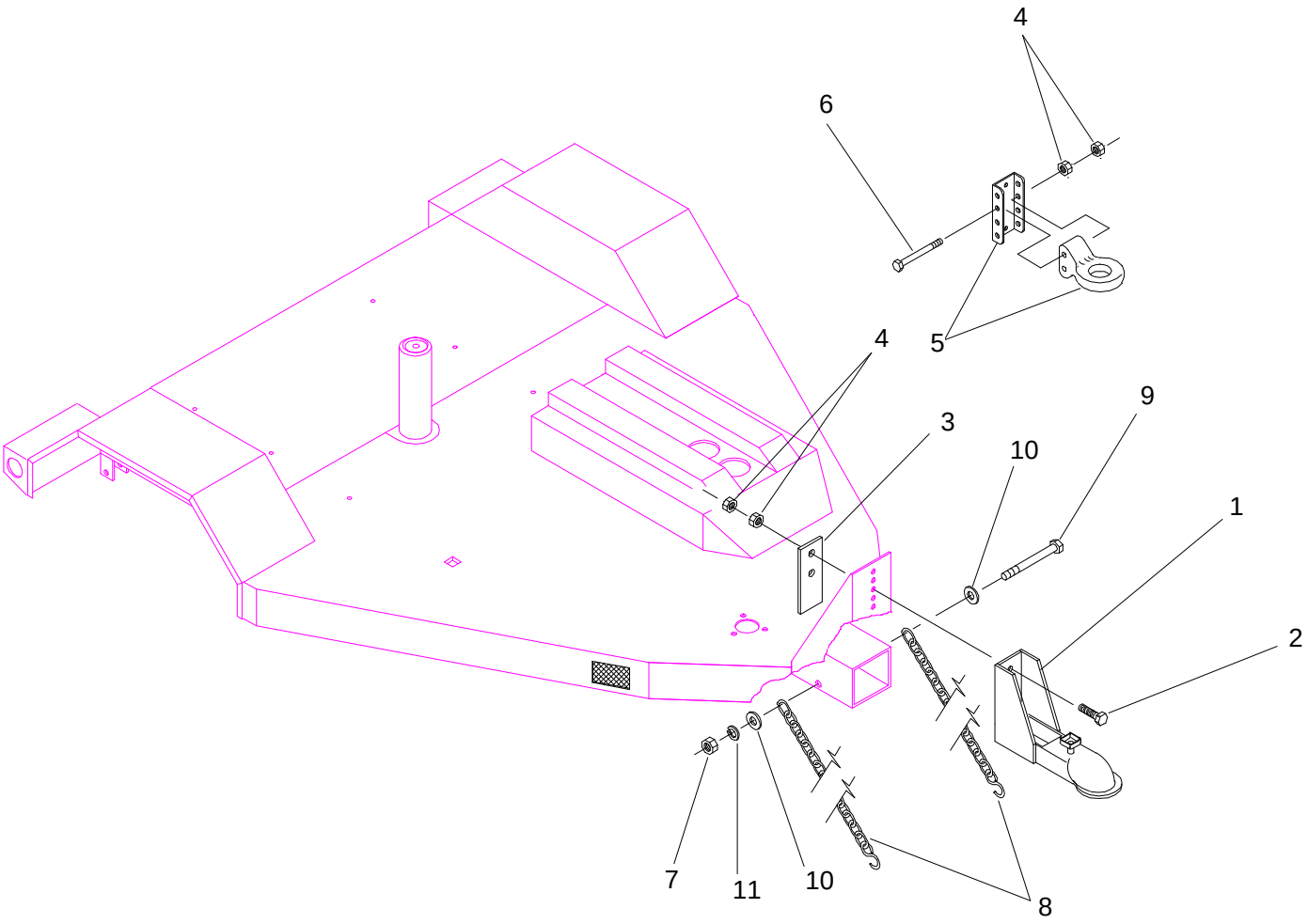

HITCH ASSEMBLY

182K-016

Ref. No.	Part No.	Description	No. Used
1	31-005-0172	Hitch	1
2	327-7	Capscrew - Hex Hd.	2
3	31-004-0941	Hitch Bracket	1
4	3217-11	Hex Nut	8
5	02-276-0100	Pintle Hitch (optional)	1
6	327-11	Capscrew - Hex Hd.	2

Ref. No.	Part No.	Description	No. Used
7	3217-7	Hex Nut	1
8	01-251-0360	Safety Chain	2
9	323-25	Capscrew - Hex Hd.	1
10	3256-4	Flat Washer	2
11	3253-5	Lock Washer	1

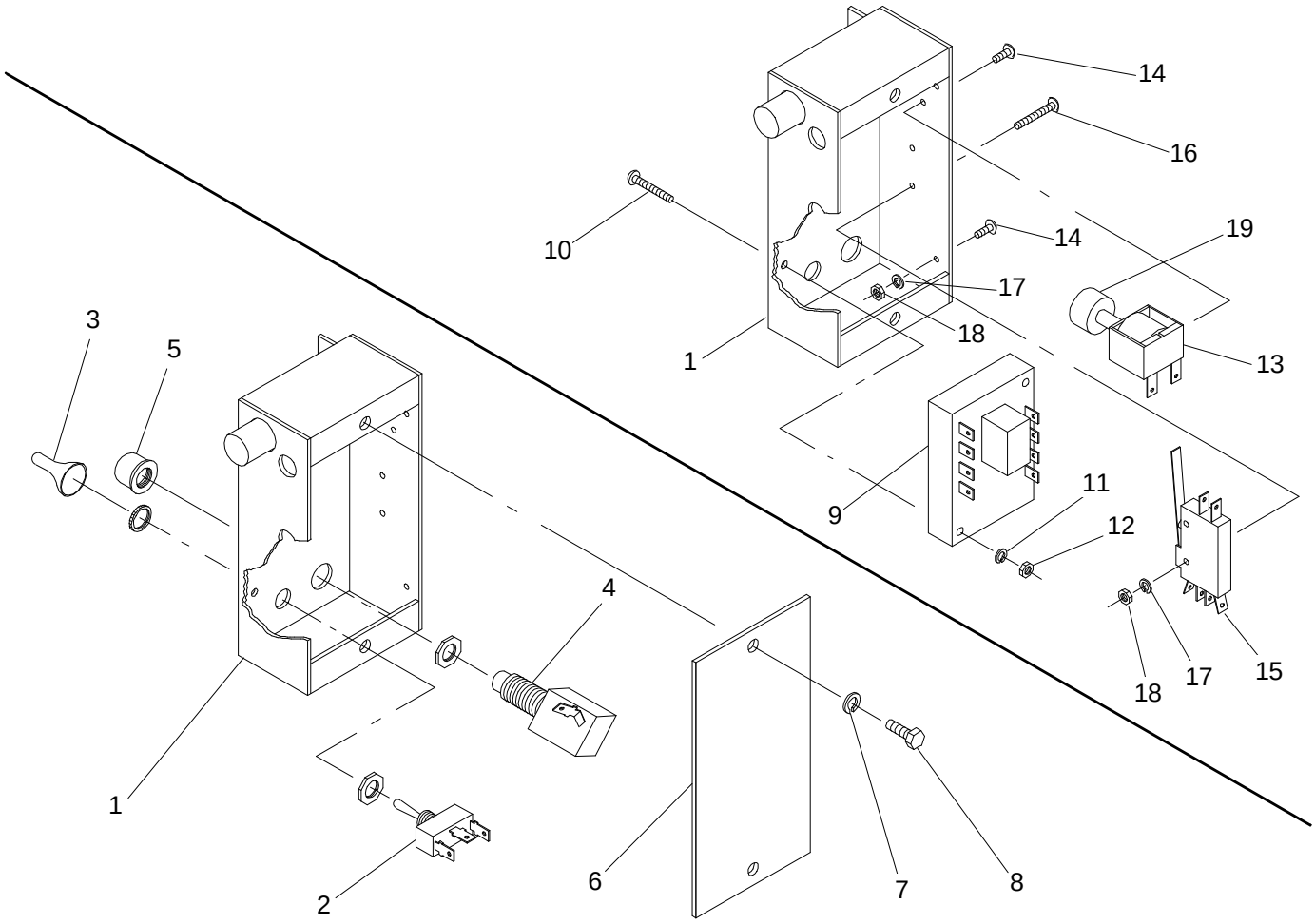

DOOR LOCK ASSEMBLY

182-019

Ref. No.	Part No.	Description	No. Used
1	18-205-3372	Door Control Box	1
2	01-603-0880	Toggle Switch	1
3	01-603-0890	Toggle Seal	1
4	01-603-0870	Momentary Ground Switch	1
5	01-603-0900	Dust Cap	1
6	18-204-3521	Door Box Cover	1
7	3253-3	Lock Washer	2
8	321-2	Capscrew - Hex Hd.	2
9	01-612-0600	Timer	1
10	01-158-1470	Machine Screw - Rd. Hd.	2
11	3253-15	Lock Washer	2

Ref. No.	Part No.	Description	No. Used
12	3217-25	Hex Nut	2
13	01-603-0860	Solenoid	1
14	01-158-1620	Machine Screw - Rd. Hd.	3
15	01-603-0850	Snap Action Switch	1
16	01-158-1630	Machine Screw - Rd. Hd.	2
17	3253-19	Lock Washer	3
18	3217-29	Hex Nut	3
19	18-204-3551	Solenoid Lock Stop	1
*	18-202-0011	Solenoid Assembly (Incl. Ref #13,19)	1
*	01-606-0370	Wiring Harness	1

* Not Illustrated

DOOR LOCK BOX WIRING DIAGRAM

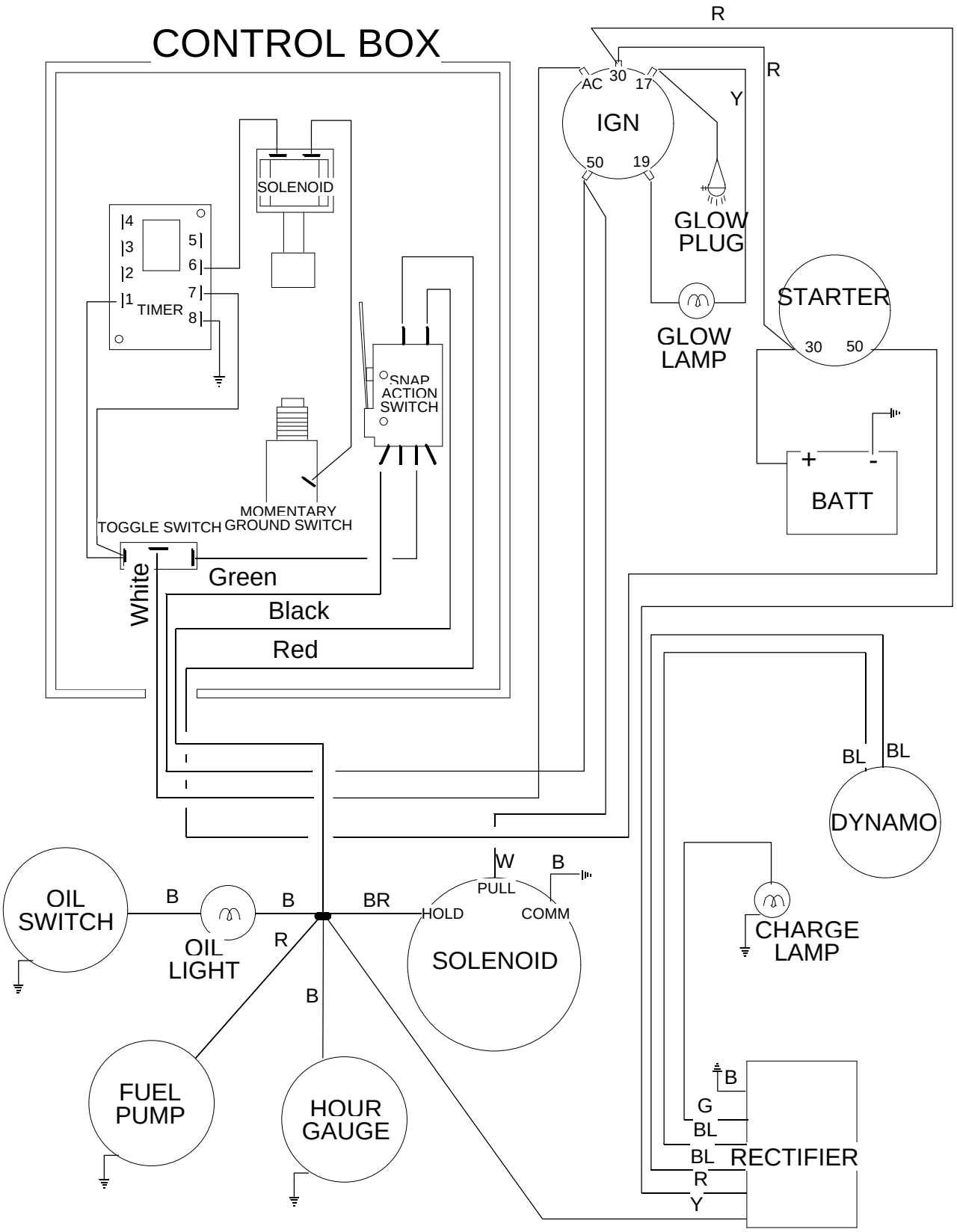

182K-020

TRAILER WIRING DIAGRAM

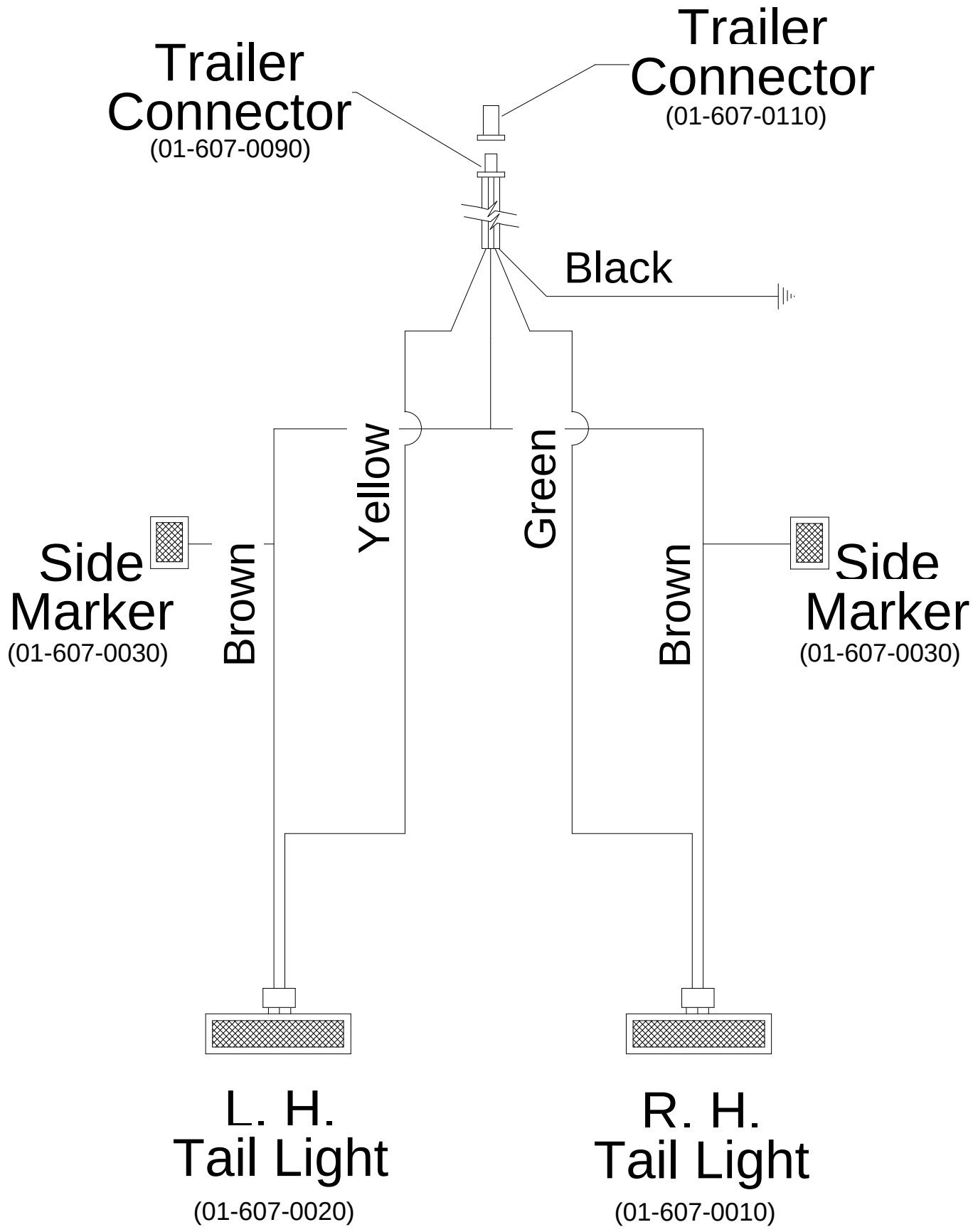

182-021

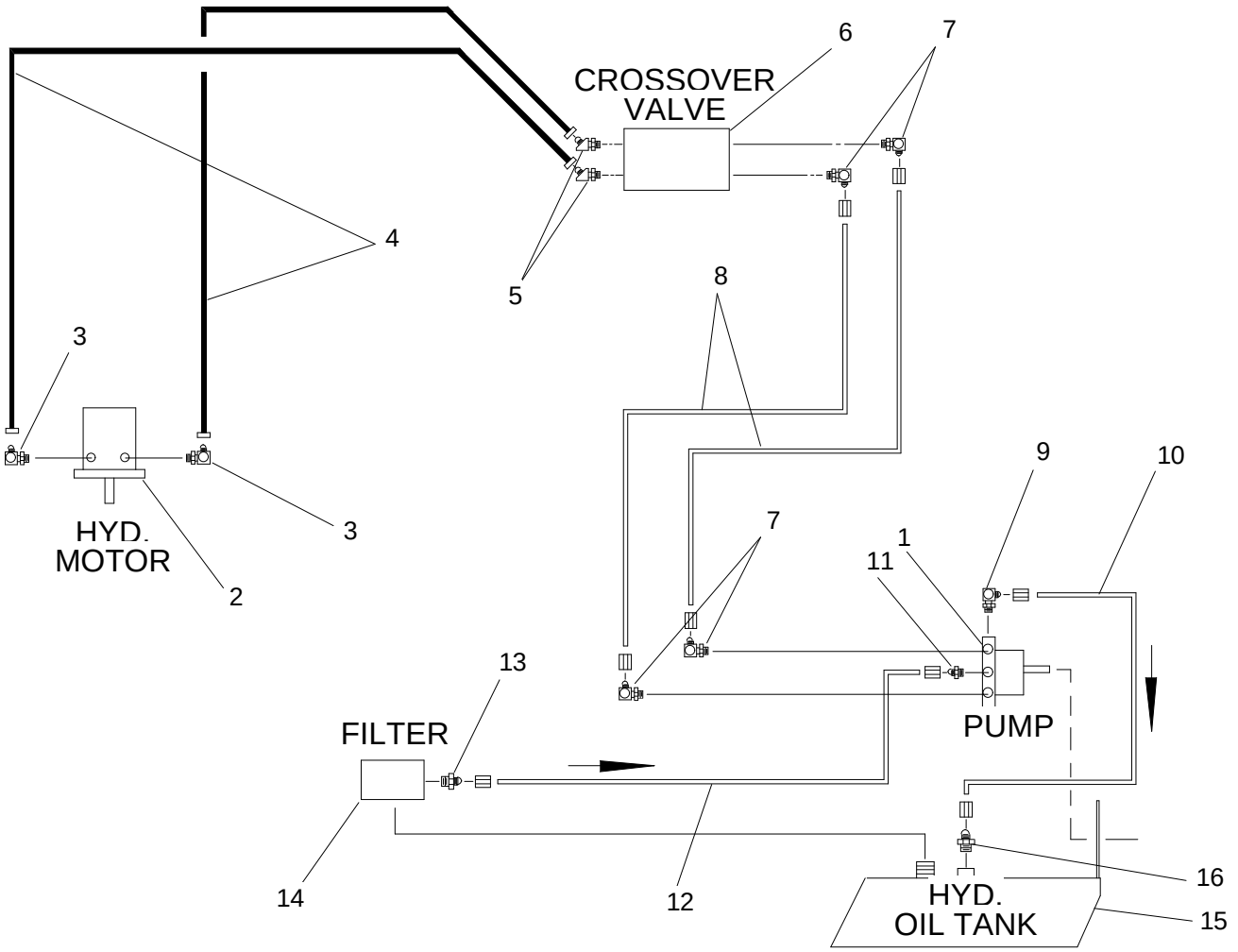

HYDRAULIC SCHEMATIC

182K-018

Ref. No.	Part No.	Description	No. Used
1	01-305-0790	Pump	1
2	01-304-0420	Hydraulic Motor	1
*	01-304-0260	Seal Kit	1
3	01-201-1520	Fitting	2
4	01-312-1610	Hyd. Hose	2
5	01-201-2240	Fitting	2
6	01-308-0840	Crossover Valve	1
7	01-201-2290	Fitting	4
8	18-204-2381	Steel Tube	2

Ref. No.	Part No.	Description	No. Used
9	01-201-2270	Fitting	1
10	18-204-2371	Steel Tube	1
11	01-201-2340	Fitting	1
12	18-204-2361	Steel Tube	1
13	01-201-2260	Fitting	1
14	01-317-0070	Filter	1
*	01-317-0100	Element & Seal Kit	1
15	18-205-2401	Hyd. Oil Tank	1
16	01-201-2280	Fitting	1

* Not Illustrated

PART NUMBER INDEX

Part No.	Description	Pg. No.	Ref. No.	Qty.
01-113-0160	Bearing	2	10	1
01-113-0200	Bearing	2	6	1
01-158-0200	Capscrew - Hex Hd.	14	17	4
01-158-0200	Capscrew - Hex Hd.	8	7	4
01-158-1150	Capscrew - Flat Hd. Socket	2	2	6
01-158-1470	Machine Screw - Rd. Hd.	19	10	2
01-158-1620	Machine Screw - Rd. Hd.	19	14	3
01-158-1630	Machine Screw - Rd. Hd.	19	16	2
01-159-0010	Presto Pin	7	13	1
01-161-0020	Pop Rivet	2	20	8
01-161-0020	Pop Rivet	9	15	1
01-161-0060	Pop Rivet	15	12	18
01-161-0060	Pop Rivet	8	10	12
01-166-1200	Flat Washer	2	8	4
01-166-1200	Flat Washer	7	11	1
01-168-1614	Machinery Bushing	7	24	1
01-168-2010	Machinery Bushing	11	20	3
01-168-3210	Machinery Bushing	2	17	2
01-168-3214	Machinery Bushing	2	21	1
01-173-1220	Carriage Bolt	1	11	1
01-175-0130	Capscrew - Hex Hd.	3	7	16
01-175-0140	Capscrew - Hex Hd.	3	13	2
01-178-0660	Capscrew - Hex Hd.	7	26	1
01-182-0832	Capscrew - Hex Hd.	12	5	2
01-192-0200	Whiz Nut	14	18	4
01-192-0200	Whiz Nut	8	8	4
01-201-1520	Fitting	22	3	2
01-201-2240	Fitting	22	5	2
01-201-2260	Fitting	22	13	1
01-201-2270	Fitting	22	9	1
01-201-2280	Fitting	22	16	1
01-201-2290	Fitting	22	7	4
01-201-2340	Fitting	22	11	1
01-215-0050	Grease Zerk	6	15	2
01-251-0360	Safety Chain	18	8	2
01-256-0140	Handle	8	9	1
01-256-0190	Lever	1	13	1
01-257-0010	Knob	14	15	1
01-257-0010	Knob	15	2	3
01-259-0050	Foam Handle	13	17	1
01-259-0050	Handle Grip	6	3	1
01-260-0710	Bushing	5	5	1
01-260-1630	Sheave	5	1	1
01-260-1650	Bushing	5	2	1
01-260-1660	Bushing	5	9	1
01-260-2000	Bushing	5	12	1
01-260-2010	Sheave	5	11	1
01-260-2020	Sheave	5	8	1
01-260-2060	Sheave	5	4	1
01-261-0400	Spring	10	8	5
01-261-0580	Spring	6	6	2
01-264-0240	Belt	5	14	1
01-264-0880	Belt	5	7	1
01-268-0200	Idler Pulley	6	17	1
01-269-0300	Lug Nut	16	6	10
01-269-1510	Tire	16	5	2
01-269-1520	Wheel	16	13	2
01-270-1350	Rubber Latch	8	11	2
01-270-3370	Engine	3	1	1
01-276-0160	Hitch Pin	13	2	1
01-280-0220	Gas Tank	17	1	1
01-283-0320	Blade	2	3	2
01-285-0260	Attaching Parts Kit	16	*	1
01-285-0340	Hanger Kit	16	7	1
01-285-0610	Axle	16	4	1
01-286-0560	Rubber Mount	15	4	3
01-304-0260	Seal Kit	11	*	1
01-304-0260	Seal Kit	22	*	1
01-304-0420	Hydraulic Motor	11	2	1
01-304-0420	Hydraulic Motor	22	2	1
01-305-0790	Pump	22	1	1
01-305-0790	Pump	4	2	1
01-305-0820	Seal Kit	4	*	1
01-308-0840	Crossover Valve	22	6	1
01-308-0840	Crossover Valve	4	7	1
01-312-1610	Hyd. Hose	22	4	2
01-317-0070	Filter	22	14	1
01-317-0100	Element & Seal Kit	22	*	1
01-506-0020	Decal - Danger	7	15	1
01-506-0030	Decal - Danger	14	19	1
01-506-0040	Decal - Danger	8	19	2
01-506-0260	Decal - Operating Instr.	12	8	1
01-506-0260	Decal - Operating Instr.	8	12	1
01-506-0290	Decal - Danger	13	18	1
01-506-0300	Decal - Danger	13	19	2
01-506-0320	Decal - Rev/N/Forward	9	21	1
01-506-0500	Decal - Toro	12	9	1
01-506-0500	Decal - Toro	8	16	1
01-506-0540	Decal - No Riders	16	12	2
01-506-0560	Decal - Hydraulic Oil	4	17	1
01-506-0700	Decal - Chipper 1820D	14	6	1
01-506-0700	Decal - Chipper 1820D	8	13	1
01-506-0960	Decal - Diesel Only	17	5	1
01-506-1130	Decal - Before Starting	8	15	1
01-506-1140	Decal - Disengage/Engage	8	14	1
01-506-1230	Decal - Danger	8	18	1
01-506-1240	Decal - Door Lock Handle	7	21	1
01-506-1250	Decal - Door Lock Release/ Timer "On-Off"	7	22	1
01-600-0030	Battery Cable-Pos	3	*	1
01-600-0160	Battery Cable-Neg	3	*	1
01-603-0850	Snap Action Switch	19	15	1
01-603-0860	Solenoid	19	13	1
01-603-0870	Momentary Ground Switch	19	4	1
01-603-0880	Toggle Switch	19	2	1
01-603-0890	Toggle Seal	19	3	1
01-603-0900	Dust Cap	19	5	1
01-606-0370	Wiring Harness	19	*	1
01-607-0010	Tail Light, R.H.	16	3	1
01-607-0020	Tail Light, L.H.	16	2	1
01-607-0030	Clearance Light	16	14	2
01-607-0090	Trailer Connector	16	*	1
01-607-0110	Trailer Connector	16	*	1
01-612-0600	Timer	19	9	1
02-276-0100	Pintle Hitch	18	5	1
18-202-0011	Solenoid Assembly	19	*	1
18-204-0451	Pivot Base	1	2	2
18-204-0461	Roller Motor Spacer	11	3	1
18-204-0591	Chute Flange Spacer	13	4	1
18-204-0641	Rotate Stop	1	10	1
18-204-0761	Arm Spacer Top	11	7	6
18-204-0801	Spring Rod	10	7	1

* Not Illustrated

PART NUMBER INDEX (Continued)

Part No.	Description	Pg. No.	Ref. No.	Qty.
18-204-1061	Side Plate	9	11	1
18-204-1121	Gas Tank Strap	17	4	2
18-204-1181	Cutter Bar Bracket	12	4	2
18-204-1191	Chute Clamp	13	7	2
18-204-1201	Chute Washer	13	6	2
18-204-1271	Directional Spacer	13	5	6
18-204-1391	Shaft Guard	2	19	1
18-204-1471	Feed Guard Flat	9	14	1
18-204-1481	Feed Guard	9	12	4
18-204-1541	Roller Lever Pad	9	2	2
18-204-1731	Idler Rod	6	4	1
18-204-1781	Gas Tank Strap	17	2	4
18-204-1821	Deflector	13	10	1
18-204-1921	Corner Guard	9	17	1
18-204-1961	Bearing Spacer	2	14	1
18-204-1971	Bearing Spacer	2	15	1
18-204-1981	Roller Spacer	10	10	1
18-204-1991	Roller Spacer	10	11	4
18-204-2121	Spacer	4	15	2
18-204-2161	Rotate Washer	1	12	1
18-204-2171	Key - Sq.	5	3	1
18-204-2181	Idler Spacer	6	13	2
18-204-2231	Roller Guard	11	11	1
18-204-2331	Valve Rod	4	13	1
18-204-2331	Valve Rod	9	5	1
18-204-2361	Steel Tube	22	12	1
18-204-2371	Steel Tube	22	10	1
18-204-2381	Steel Tube	22	8	2
18-204-2731	Motor Mount Spacer	3	3	2
18-204-2751	Motor Mount Cushion	3	5	8
18-204-2961	Key - Sq.	5	13	1
18-204-3021	Small Bearing Spacer	2	18	1
18-204-3111	Cutter Bar	12	1	1
18-204-3121	Blade Spacer	2	4	2
18-204-3131	Blade Spacer	2	*	4
18-204-3281	Throttle Cable Mount	3	12	1
18-204-3431	Radiator Screen	15	11	1
18-204-3451	Fuel Filter Mount	3	17	1
18-204-3521	Door Box Cover	19	6	1
18-204-3521	Door Box Cover	7	18	1
18-204-3551	Solenoid Lock Stop	19	19	1
18-204-3631	Door Seal Plate	7	3	1
18-205-0123	Chipper Disc	2	1	1
18-205-0161	Spring Bracket	10	2	1
18-205-0171	Pivot End Cap	1	3	1
18-205-0182	Wrapper Top	7	9	1
18-205-0193	Chute	13	1	1
18-205-0202	Motor Plate	11	1	1
18-205-0212	Roller Pivot Arm	10	1	1
18-205-0221	Spring Rod Pivot Bolt	10	5	2
18-205-0251	Disc Guard	11	10	1
18-205-0262	Feed Roller	11	16	1
18-205-0271	Cutter Bar Spacer	12	2	1
18-205-0281	Roller Lever	9	1	1
18-205-0291	Rod Pivot	4	11	1
18-205-0291	Rod Pivot	6	5	1
18-205-0301	Hinge Pin	7	7	1
18-205-0311	Wing Nut	13	15	1
18-205-0321	Roller Bolt	11	17	1
18-205-0361	Deflector Pin	13	11	1
18-205-0381	Cleanout Lid	7	14	1
18-205-2211	Bottom Belt Stop	5	17	1
18-205-2391	Pump Lever	4	9	1
18-205-2401	Hyd. Oil Tank	22	15	1
18-205-2401	Hydraulic Oil Tank	4	1	1
18-205-2803	Chipper Main Frame	1	1	1
18-205-2811	Belt Guard	8	1	1
18-205-2823	Trailer Main Frame	16	1	1
18-205-2831	Top Lid	14	5	1
18-205-2841	Top Cowling	14	4	1
18-205-2851	Idler Handle	6	2	1
18-205-2861	Belt Idler	6	1	1
18-205-2871	Top Belt Stop	5	16	1
18-205-2881	Lower Belt Stop	5	15	1
18-205-2891	Motor Mount - LH	3	6	2
18-205-2901	Motor Mount - RH	3	2	2
18-205-2911	Front Guard	14	1	1
18-205-2921	Radiator Cowling Mount	14	2	1
18-205-3001	Jack	16	8	1
18-205-3011	Louvered Cover	8	6	1
18-205-3311	Fuel Pump Cover	17	6	1
18-205-3321	Radiator Screen Frame	15	10	1
18-205-3341	Front Cowling	14	3	1
18-205-3351	Control Box	15	3	1
18-205-3361	Control Box Cover	15	7	1
18-205-3372	Door Control Box	19	1	1
18-205-3372	Door Control Box	7	16	1
18-205-3391	Access Panel	15	1	1
18-205-3823	Drum Cover	7	1	1
31-004-0941	Hitch Bracket	18	3	1
31-005-0172	Hitch	18	1	1
321-2	Capscrew - Hex Hd.	15	9	4
321-2	Capscrew - Hex Hd.	19	8	2
321-2	Capscrew - Hex Hd.	7	19	2
321-4	Capscrew - Hex Hd.	17	7	4
32103-2	Wing Nut	14	16	2
32121-16	Roll Pin	4	10	1
3217-11	Hex Nut	11	9	3
3217-11	Hex Nut	18	4	8
3217-11	Hex Nut	2	13	4
3217-11	Hex Nut	3	11	4
3217-12	Hex Nut	1	14	1
3217-12	Hex Nut	10	6	8
3217-12	Hex Nut	2	9	4
3217-12	Hex Nut	7	12	1
3217-25	Hex Nut	19	12	2
3217-29	Hex Nut	19	18	3
3217-6	Hex Nut	14	14	15
3217-6	Hex Nut	9	18	16
3217-7	Hex Nut	1	9	6
3217-7	Hex Nut	11	15	2
3217-7	Hex Nut	14	10	5
3217-7	Hex Nut	17	3	9
3217-7	Hex Nut	18	7	1
3217-7	Hex Nut	3	15	12
3217-7	Hex Nut	4	6	8
3217-7	Hex Nut	5	21	3
3217-7	Hex Nut	6	9	2
3217-7	Hex Nut	7	6	2
3217-7	Hex Nut	8	5	4

* Not Illustrated

PART NUMBER INDEX (Continued)

Part No.	Description	Pg. No.	Ref. No.	Qty.
3217-7	Hex Nut	9	4	5
3217-9	Hex Nut	10	4	2
3217-9	Hex Nut	11	19	4
3217-9	Hex Nut	12	6	16
3217-9	Hex Nut	13	8	6
3217-9	Hex Nut	16	11	3
3217-9	Hex Nut	2	5	18
3217-9	Hex Nut	4	12	2
3217-9	Hex Nut	6	7	7
3218-3	Jam Nut	4	18	1
3218-3	Jam Nut	6	19	1
3218-3	Jam Nut	7	23	6
3218-5	Jam Nut	13	9	6
3218-5	Jam Nut	4	20	2
3218-5	Jam Nut	6	18	1
3218-5	Jam Nut	9	8	2
3218-7	Jam Nut	1	15	1
3218-7	Jam Nut	10	9	1
322-1	Capscrew - Hex Hd.	15	6	3
322-3	Capscrew - Hex Hd.	14	11	15
322-5	Capscrew - Hex Hd.	9	16	4
323-10	Capscrew - Hex Hd.	4	8	2
323-12	Capscrew - Hex Hd.	3	4	4
323-13	Capscrew - Hex Hd.	11	12	2
323-25	Capscrew - Hex Hd.	18	9	1
323-26	Capscrew - Hex Hd.	7	10	1
323-36	Capscrew - Hex Hd.	7	25	1
323-4	Capscrew - Hex Hd.	7	2	2
323-6	Capscrew - Hex Hd.	14	7	6
323-6	Capscrew - Hex Hd.	7	17	2
323-6	Capscrew - Hex Hd.	8	2	2
323-7	Capscrew - Hex Hd.	4	3	6
323-7	Capscrew - Hex Hd.	5	18	3
323-7	Capscrew - Hex Hd.	9	13	5
323-8	Capscrew - Hex Hd.	1	6	6
323-9	Capscrew - Hex Hd.	4	14	2
3230-2	Carriage Bolt	9	19	12
3231-4	Carriage Bolt	8	17	2
3233-4	Carriage Bolt	12	3	4
3233-4	Carriage Bolt	13	12	1
325-12	Capscrew - Hex Hd.	4	16	1
325-17	Capscrew - Hex Hd.	10	3	1
325-19	Capscrew - Hex Hd.	6	16	1
325-6	Capscrew - Hex Hd.	1	5	1
325-6	Capscrew - Hex Hd.	16	9	3
325-8	Capscrew - Hex Hd.	11	4	4
325-8	Capscrew - Hex Hd.	13	3	6
325-8	Capscrew - Hex Hd.	2	16	3
325-8	Capscrew - Hex Hd.	6	12	2
325-8	Capscrew - Hex Hd.	9	7	1
3253-15	Lock Washer	19	11	2
3253-19	Lock Washer	19	17	3
3253-3	Lock Washer	15	8	4
3253-3	Lock Washer	17	8	4
3253-3	Lock Washer	19	7	2
3253-3	Lock Washer	7	20	2
3253-4	Lock Washer	14	13	17
3253-4	Lock Washer	15	5	3
3253-4	Lock Washer	9	20	16
3253-5	Lock Washer	1	8	6
3253-5	Lock Washer	11	14	2
3253-5	Lock Washer	14	9	6
3253-5	Lock Washer	18	11	1
3253-5	Lock Washer	4	5	6
3253-5	Lock Washer	5	20	3
3253-5	Lock Washer	7	5	4
3253-5	Lock Washer	8	4	4
3253-5	Lock Washer	9	10	5
3253-7	Lock Washer	1	4	1
3253-7	Lock Washer	11	5	4
3253-7	Lock Washer	13	14	1
3253-7	Lock Washer	16	10	3
3253-7	Lock Washer	6	11	3
3253-8	Lock Washer	11	8	4
3253-8	Lock Washer	3	10	4
3256-3	Flat Washer	14	12	30
3256-4	Flat Washer	1	7	6
3256-4	Flat Washer	11	13	2
3256-4	Flat Washer	14	8	11
3256-4	Flat Washer	18	10	2
3256-4	Flat Washer	3	16	4
3256-4	Flat Washer	4	4	14
3256-4	Flat Washer	5	19	6
3256-4	Flat Washer	6	8	1
3256-4	Flat Washer	7	4	8
3256-4	Flat Washer	8	3	6
3256-4	Flat Washer	9	9	5
3256-6	Flat Washer	12	7	6
3256-6	Flat Washer	13	13	1
3256-6	Flat Washer	6	10	11
3256-6	Flat Washer	9	3	4
3256-7	Flat Washer	2	12	4
3256-7	Flat Washer	3	9	4
327-11	Capscrew - Hex Hd.	18	6	2
327-6	Capscrew - Hex Hd.	3	8	4
327-7	Capscrew - Hex Hd.	11	6	3
327-7	Capscrew - Hex Hd.	18	2	2
327-9	Capscrew - Hex Hd.	2	11	2
3272-11	Cotter Pin	13	16	1
3272-11	Cotter Pin	9	6	1
3272-21	Cotter Pin	6	14	1
3272-23	Cotter Pin	7	8	1
328-7	Capscrew - Hex Hd.	2	7	2
3296-22	Lock Nut	4	19	2
41-004-5201	Key - Sq.	11	18	1
41-004-5241	Key - Sq.	5	6	1
48-004-3831	Battery Hold Down	3	14	1

* Not Illustrated

PRODUCT CHANGES

In an effort to make improvements available to TORO owners as quickly as possible minor changes are incorporated into Toro's products from time to time that do not become immediately shown in the Parts Catalog. If such a change has been made in your unit which is not reflected in your manual see your TORO Distributor or an Authorized Service Dealer for information and part numbers.

IDENTIFICATION & ORDERING

MODEL AND NUMBERS

The COMMERCIAL CHIPPER 1820D has two identification numbers; a model number and a serial number. The two numbers are stamped on a plate which is located on the chipper housing. In any correspondence concerning the 1820D, supply model and serial numbers to assure that correct information and replacement parts are obtained.

To order replacement parts from your TORO Distributor or an Authorized Service Dealer, supply the following information:

1. Model and serial number of the 1820D.
2. Part number description and the quantity of part (s) desired.

TABLE OF CONTENTS

Description	Page	Description	Page
Main Frame Mounting	1	Cutter Bar	12
Chipper Disc Assembly	2	Chute Assembly	13
Engine Mounting	3	Engine Cowling	14 - 15
Hydraulic Oil Tank Assembly	4	Trailer Assembly	16
Drive Belts	5	Fuel Tank Assembly	17
Idler Assembly	6	Hitch Assembly	18
Drum Cover	7	Door Lock Box Assembly	19
Belt Guard & Louvered Cover	8	Door Lock Box Wiring Diagram	20
Roller Lever & Feed Table	9	Trailer Wiring Diagram	21
Roller Pivot Arm	10	Hydraulic Schematic	22
Feed Roller	11	Part Number Index	23 - 25

NOTES

MAINTENANCE RECORD

Date								