FORM NO. 01-505-1400 Rev. A

TORO®

MODEL NO. 44230 - 40001 & UP

PARTS CATALOG

5TH WHEEL HITCH KIT

WORKMAN™ 3000

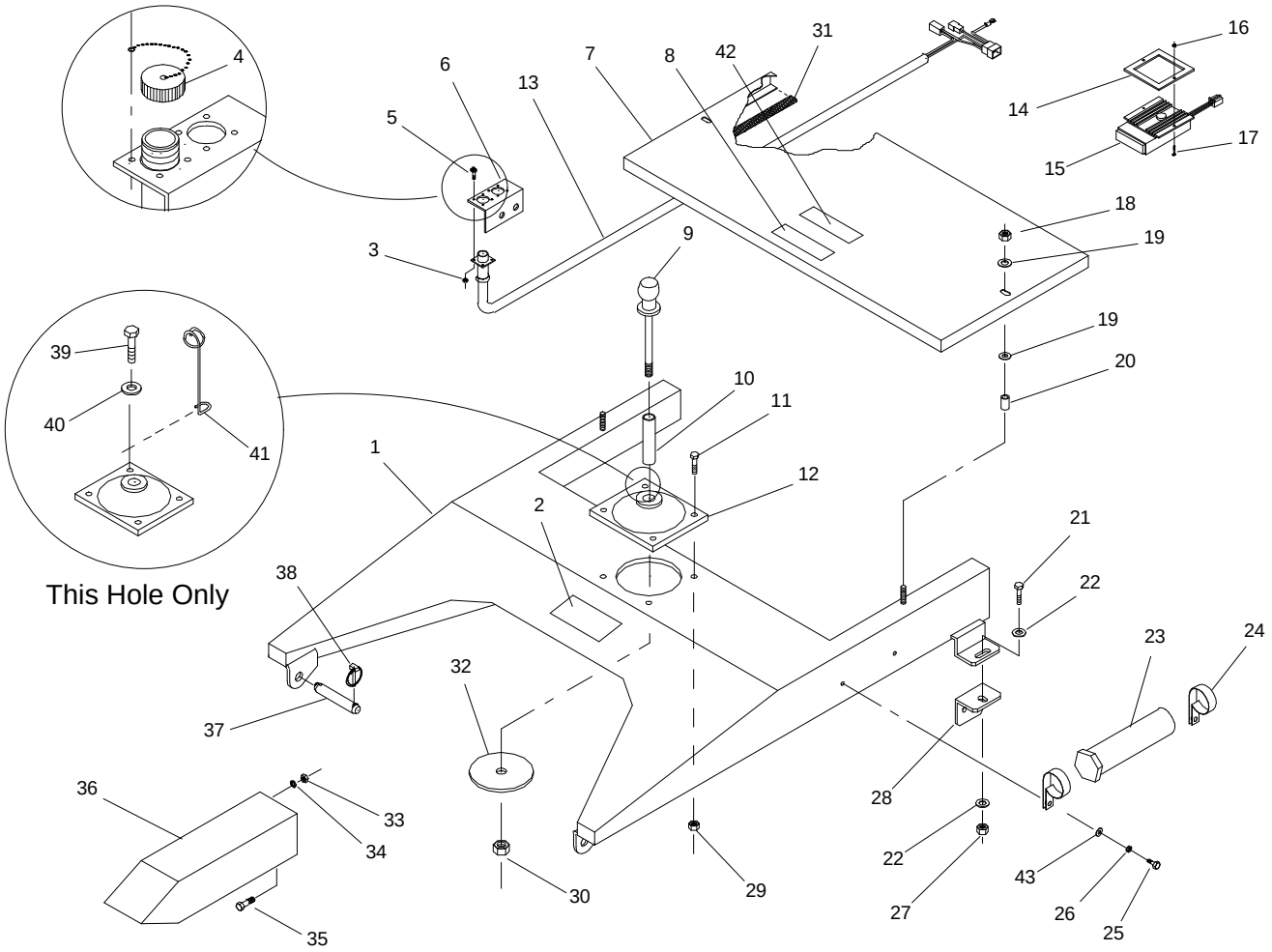

KIT ASSEMBLY

44230-1

Ref. No.	Part No.	Description	No. Used
1	92-4506	Frame - Main	1
2	01-506-1300	Decal - Danger	1
3	3296-52	Lock Nut	4
4	92-4541	Sealing Cap	1
5	3290-93	Screw - Mach. Pan Hd.	4
6	92-4524	Bracket - Brake Plug	1
7	92-4507	Lid - Access	1
8	75-5190	Decal - No Riders	1
9	92-4550	Hitch - Ball Assembly	1
10	92-4523	Spacer - Rebound	1
11	324-6	Capscrew - Hex Hd.	3
12	01-286-0740	Rubber Isolator	1
13	01-606-0300	Wiring Harness	1
14	92-4526	Spacer - Brake	1
15	02-266-0910	Electric Brake w/connector	1
16	3296-2	Lock Nut	2

Ref. No.	Part No.	Description	No. Used
17	32105-13	Screw - Ind. Hex Hd. Mach.	2
18	3296-59	Lock Nut	2
19	3256-4	Flat Washer	4
20	92-4528	Spacer - Lid	2
21	325-5	Capscrew - Hex Hd.	2
22	3256-26	"SAE" Flat Washer	4
23	74-0720	Manual Tube	1
24	2412-133	R - Clamp	2
25	321-4	Capscrew - Hex Hd.	2
26	3253-3	Lock Washer	2
27	3296-25	Lock Nut	2
28	92-2667	Bracket - Att. Mount	2
29	3296-48	Lock Nut	4
30	3296-51	Lock Nut	1
31	92-4527	U-Channel-Lid	2
32	92-4508	Washer - Rebound	1

© The TORO Company - 1995
All Rights Reserved

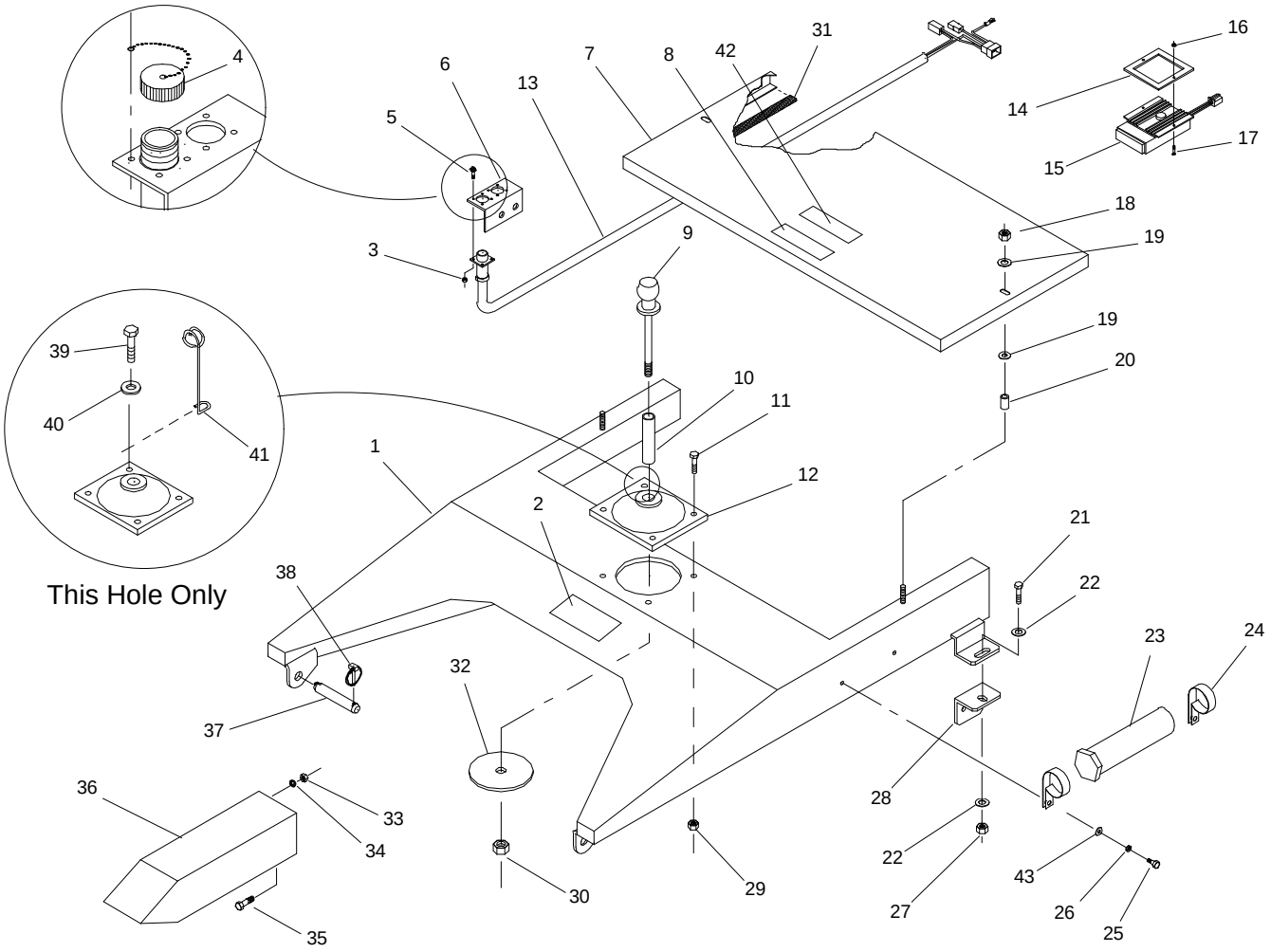

KIT ASSEMBLY (Continued)

44230-1

Ref. No.	Part No.	Description	No. Used
33	3217-7	Hex Nut	4
34	3253-5	Lock Washer	4
35	323-6	Capscrew - Hex Hd.	4
36	92-4509	Stabilizer - Rear	1
37	92-1233	Pin - Clevis	2
38	92-1298	Pin - Lynch	4
39	324-7	Capscrew - Hex Hd.	1

Ref. No.	Part No.	Description	No. Used
40	3256-25	"SAE" Flat Washer	1
41	92-4544	Bracket - Wire	1
42	54-0890	Decal - Caution	1
43	3256-2	Flat Washer	2
*	218-594	20 Amp Fuse	1
*	92-2672	Male Coupling - Hyd	1
*	250-5	Wire Ties	4

HYDRAULIC SCHEMATIC

(Vehicle w/Optional Remote Hydraulic Kit)

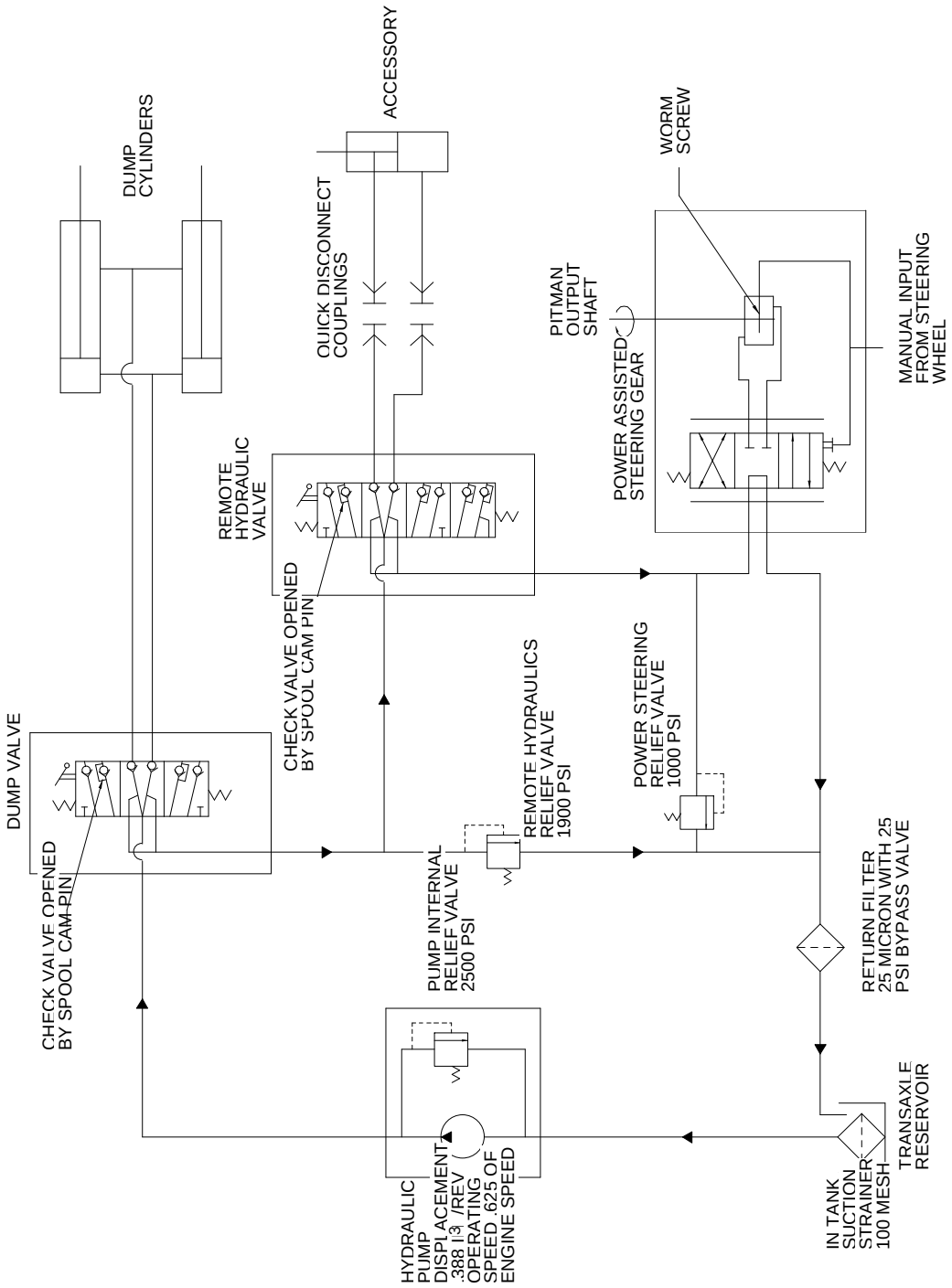

ELECTRICAL SCHEMATIC

BRAKE CONTROLLER

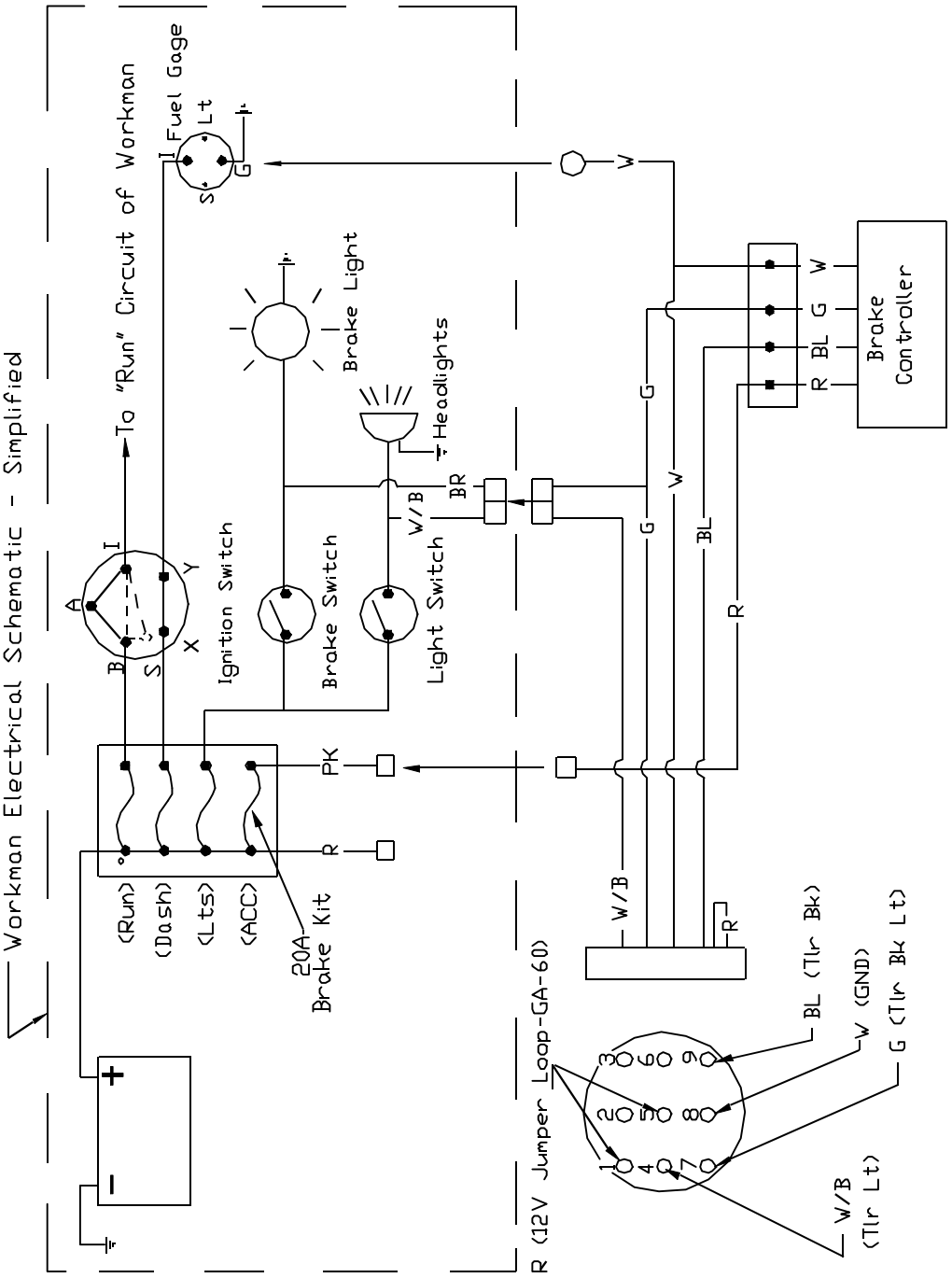

PRODUCT CHANGES

In an effort to make improvements available to TORO owners as quickly as possible minor changes are incorporated into Toro's products from time to time that do not become immediately shown in the Parts Catalog. If such a change has been made in your unit which is not reflected in your manual see your TORO Distributor or an Authorized Service Dealer for information and part numbers

IDENTIFICATION & ORDERING

MODEL AND NUMBERS

The 5th Wheel Hitch Kit has two identification numbers; a model number and a serial number. The two numbers are stamped on a plate which is located on the main frame. In any correspondence concerning the 5th Wheel Hitch Kit, supply model and serial numbers to assure that correct information and replacement parts are obtained.

To order replacement parts from your TORO Distributor or an Authorized Service Dealer, supply the following information:

1. Model and serial number of the unit.
2. Part number description and the quantity of part (s) desired.

NOTE: Do not order by reference number if a parts catalog is being used: use the PART NUMBER.

TABLE OF CONTENTS

Description	Page	Description	Page
Kit Assembly	1 - 2	Electrical Schematic	4
Hydraulic Schematic	3		

NOTES

NOTES

MAINTENANCE RECORD

Date								