FORM NO. 3310-804 Rev. A

TORO®

MODEL NO. 23205-600001 THRU 700001 & UP

PARTS CATALOG

25" WHIRLWIND® HEVI-DUTY

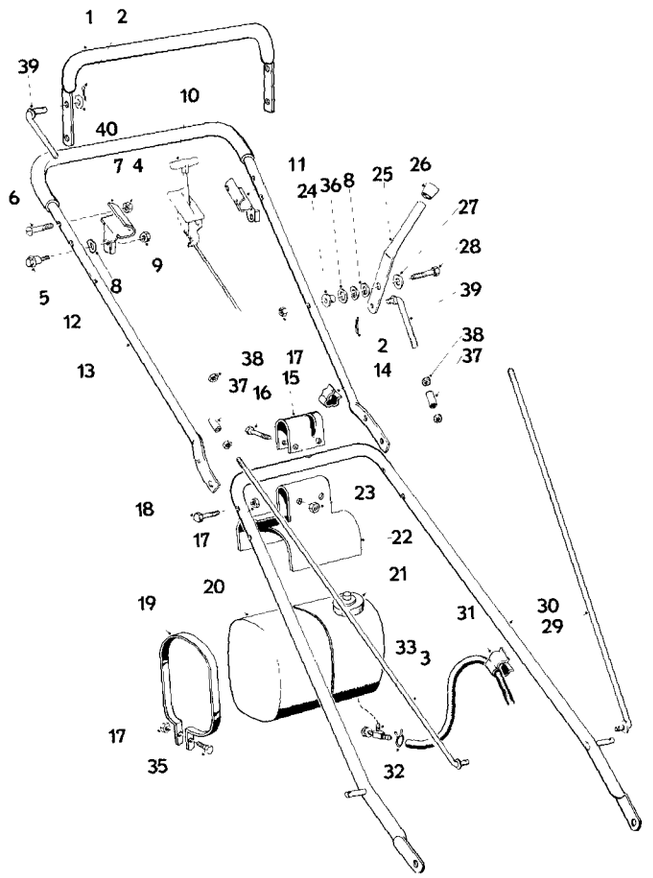

HANDLE ASSEMBLY

Ref. No.	Part No.	Description	No. Used
1	19-7180	Bail & Grip Assembly	1
2	3272-6	Pin, Cotter	2
3	10-9360	Control Rod. Lower	1
4	3296-2	Locknut	2
5	5-2490	Screw, Shoulder	2
6	3251-11	Screw, Machine	2
7	3-7371	Bracket, Control Bail	1
8	3290-211	Washer, Spring	4
9	3296-47	Locknut	2
10	23-4600	Control, Throttle	1
11	3-7372	Bracket, Control Bail	1
12	12-9230	Decal	1
13	26-7840	Handle & Grip Assembly	1
14	5-0748	Clamp	1
15	22-5060	Clamp, Fuel Tank	1
16	322-7	Capscrew	2
17	32146-17	Locknut	7
18	321-8	Capscrew	4
19	3-6346	Strap, Tank	2
20	222-14	Tank	1

Ref. No.	Part No.	Description	No. Used
21	222-15	Cap, Tank	1
22	3-6345	Bracket, Fuel Tank	1
23	32146-5	Locknut	2
24	3-7811	Pivot	1
25	5-2154	Handle, Cutter	1
26	5-0747	Button, Plug	1
27	3256-22	Washer	1
28	321-10	Capscrew	1
29	22-6030	Control Rod, Lower	1
30	26-7830	Lower Handle Assembly	1
31	3-5181	Clamp	1
32	2210-87	Clamp, Hose	1
33	304-71	Shut Off Valve	1
35	321-10	Capscrew	2
36	3256-25	Washer	1
37	3-6481	Sleeve	2
38	3217-6	Nut	4
39	3-8197	Cutter Link	2
40	3-6712	Spacer	1
*	6-2379	Loose Parts Kit	1

*Not Illustrated

Copyright 1976 by
The Toro Company
Minneapolis, Minnesota 55420 U.S.A.

Price $1.00

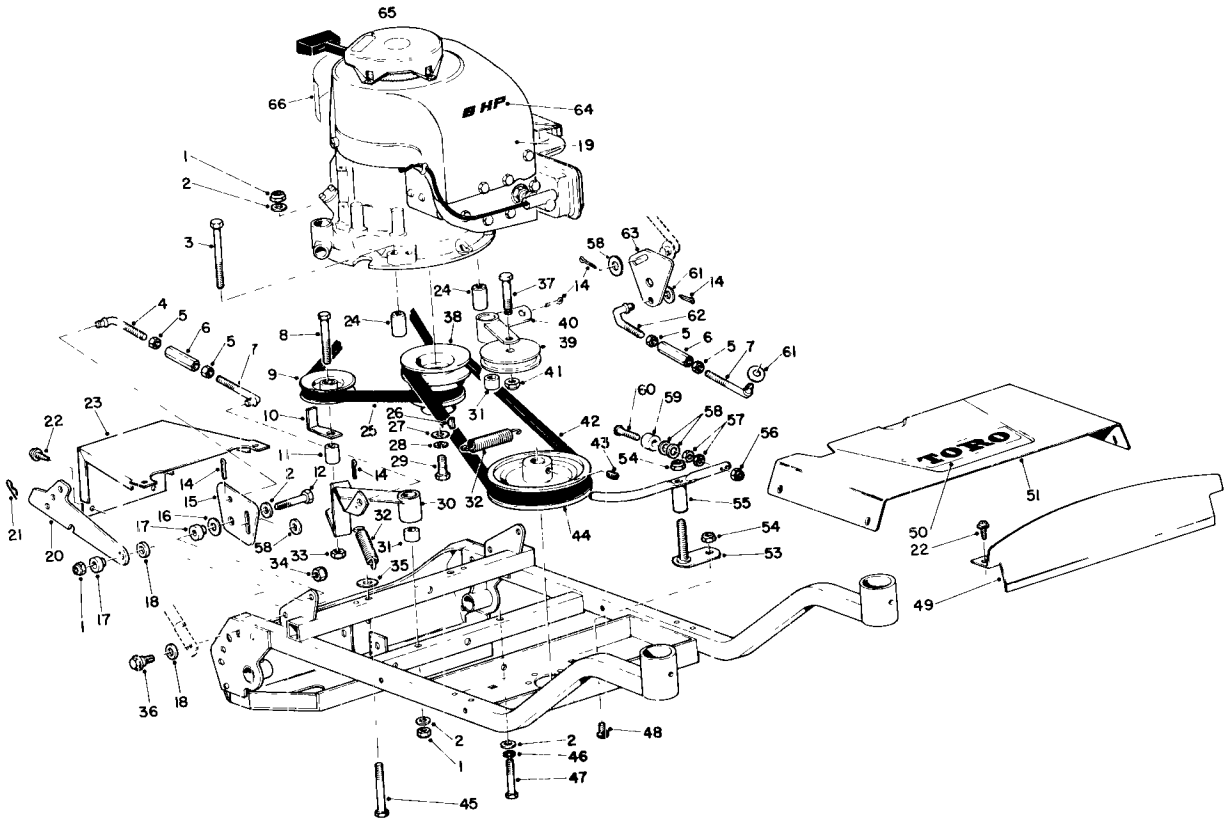

ENGINE AND FRAME ASSEMBLY

Ref. No.	Part No.	Description	No Used
1	32146-5	Locknut	5
2	3256-23	Washer	6
3	322-22	Capscrew	2
4	5-1493	Link, Traction	1
5	3217 6	Nut	4
6	3-6481	Sleeve	2
7	3-8197	Link	2
8	323-12	Capscrew	1
9	3-4243	Pulley	1
10	3-6471	Hook	1
11	23-7610	Spacer	2
12	32104-34	Screw	5
14	3272-6	Cotter Pin	1
15	5-1492	Bell Crank	2
16	5-0744	Washer	4
17	3-7811	Pivot	4
18	3-3287	Washer	1
19	221-560	Engine	2
20	5-2446	Latch	2
21	3290-250	Hair Pin Cotter	10
22	32104-77	Self Tapping Screw	1
23	5-3482	Rear Shroud	

Ref. No.	Part No	Description	No Used
24	3-8164	Pivot	2
25	3-2733	Belt	1
26	3257-17	Key	1
27	3256-4	Washer	1
28	3253-21	Lockwasher	1
29	3211-4	Capscrew	1
30	5-2147	Arm & Bushing (Incl. Ref. # 31)	1
31	256-77	Bushing	2
32	3-8135	Spring	2
33	32146-2	Locknut	1
34	32146-5	Locknut	2
35	4-2320	Spacer	2
36	5-2490	Screw	2
37	3-7283	Capscrew	1
38	23-7620	Pulley	1
39	244-63	Pulley	1
40	5-2127	Arm & Bushing (Incl. Ref # 31)	1
41	~~32146-12~~ 32146-6	Locknut	1
42	3-8095	Belt	1
43	3246-3	Set Screw	2
44	3-8423	Pulley	1

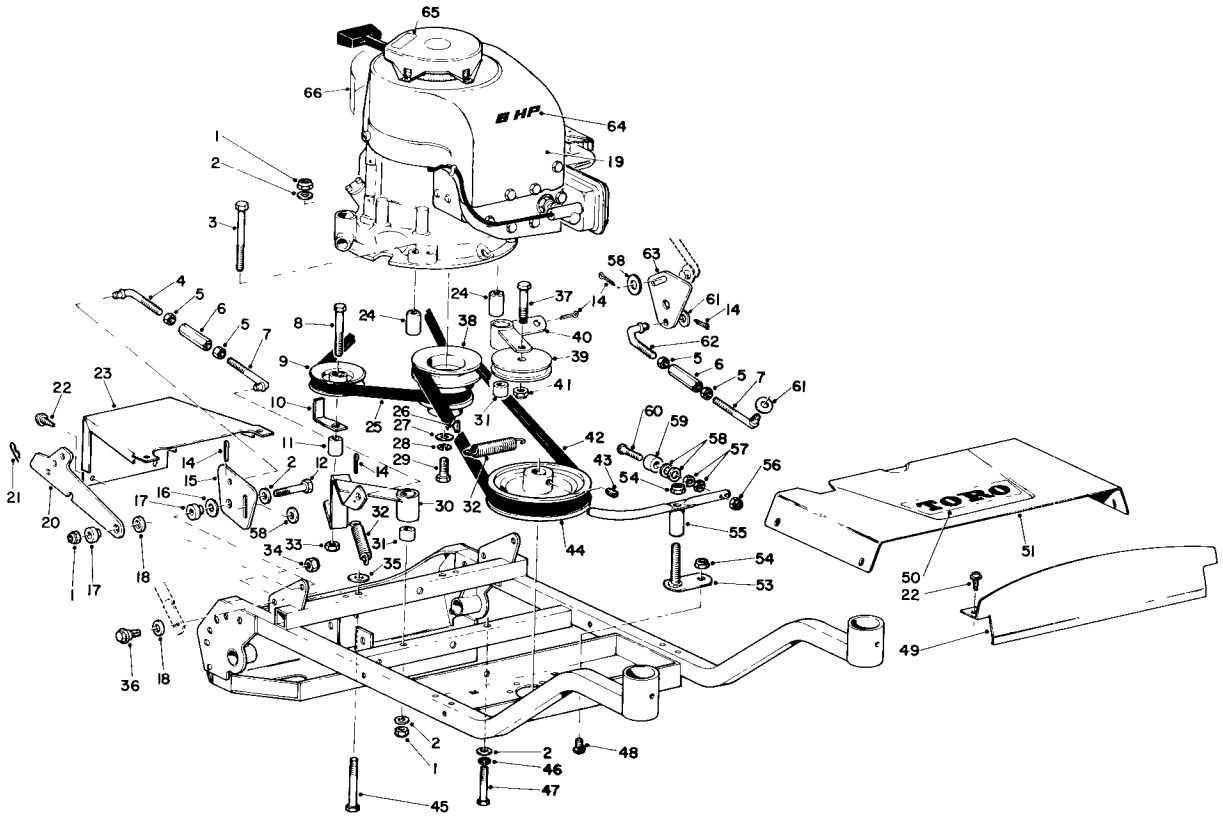

ENGINE AND FRAME ASSEMBLY (Continued)

Ref No	Part No	Description	No. Used
45	322-11	Capscrew	1
46	3253-4	Lockwasher	1
47	322-9	Capscrew	1
48	3231-21	Carriage Bolt	1
49	3-8151	Shroud Panel	1
50	3-8154	Decal	1
51	5-2148	Front Shroud	1
53	3-8306	Pivot Base Assembly	1
54	32146-2	Locknut	2
55	5-2126	Brake Arm	1
56	3296-12	Locknut	1

*Not Illustrated

Ref. No.	Part No.	Description	No. Used
57	3217-26	Nut	2
58	3256-2	Washer	4
59	237-45	Bumper	1
60	3251-7	Screw	1
61	3-3846	Washer	2
62	5-2142	Link	1
63	22-6020	Bell Crank	1
64	23-7650	Decal	1
65	22-5180	Decal Caution	1
66	25-8410	Decal Starting Instructions	1

Spark Arrestor Muffler Optional Equipment

*	23-8960	Muffler	1
*	3290-154	Conduit Locknut	1
*	2811-6	45° Steel Elbow	1

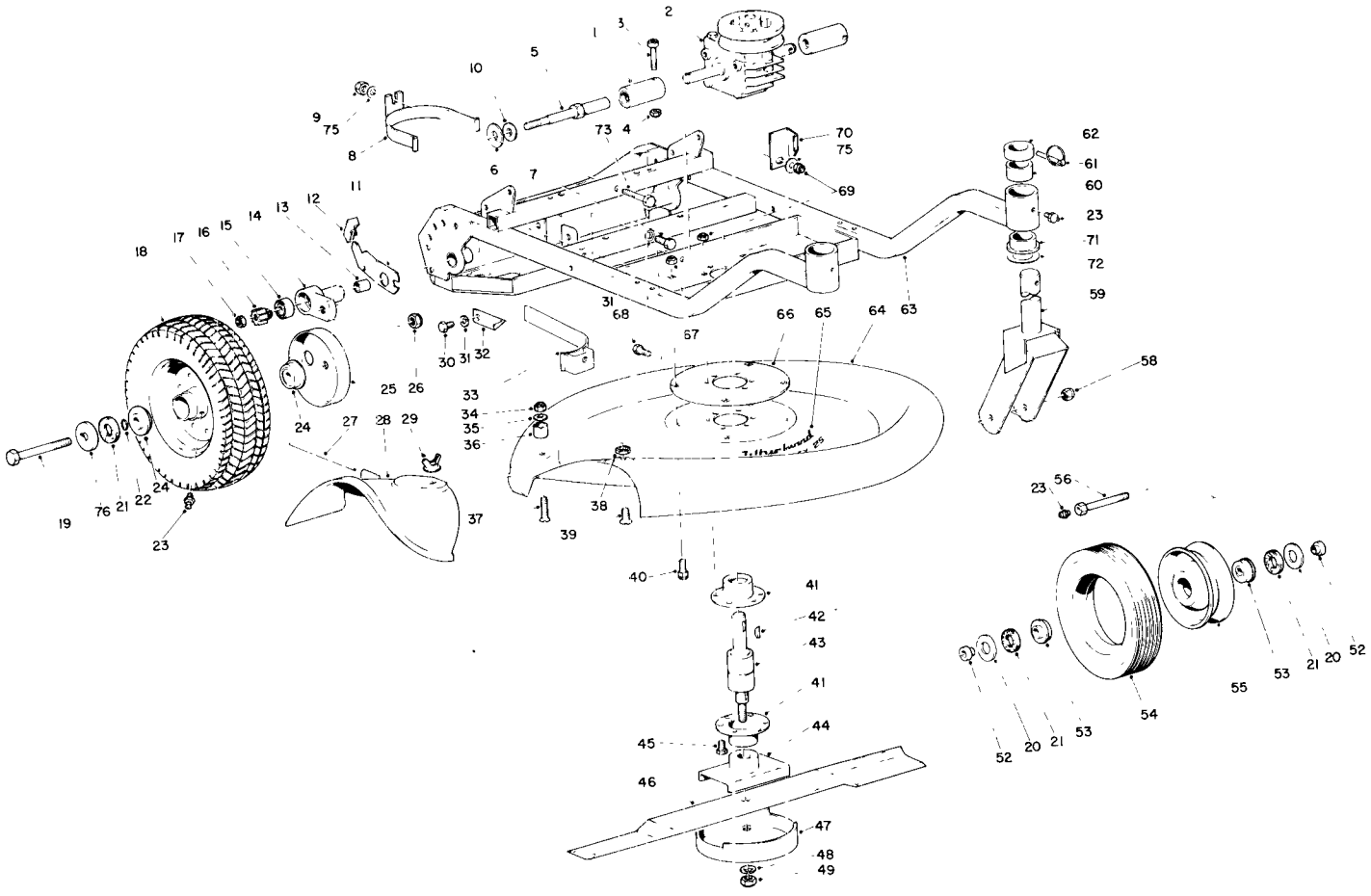

FRAME AND CUTTER HOUSING ASSEMBLY

Ref. No.	Part No.	Description	No. Used
1	6-7179	Clutch Assembly R.H.	1
*	6-7189	Clutch Assembly L.H.	1
2	3-8699	Transmission Assembly	1
3	5-1491	Screw	2
4	3296-2	Locknut	2
5	5-2131	Drive Spindle, Right	1
*	5-2132	Drive Spindle, Left	1
6	3-8115	Thrust Washer	2
7	322-7	Capscrew	1
8	5-2145	Belt Retainer Assembly	1
9	3296-47	Locknut	1
10	252-73	Washer	2
11	5-2118	Spring Arm Assy., Right	1
*	5-2117	Spring Arm Assy., Left	1
12	5-0656	Knob, Right	1
*	5-0657	Knob, Left	1
13	256-	Bushing	2
14	3-8117	Pivot Arm Assy., Right (Incl. Ref. # 13 & 15)	1
*	3-8116	Pivot Arm Assy., Left (Incl. Ref. # 13 & 15)	1
15	251-183	Bearing	2
16	3-7829	Pinion Kit	1

Ref. No.	Part No.	Description	No. Used
17	3220-3	Jam Nut, Right	1
*	3220-16	Nut, Special, L.H.	1
18	3-9219	Rear Wheel Assy., (Incl. Ref. 24)	2
19	3213-12	Capscrew	2
20	3256-28	Washer	4
21	3-4417	Washer	6
22	237-30	"O" Ring	2
23	302-5	Grease Fitting	6
24	251-191	Bearing	4
25	3-8127	Wheel Cover	2
26	3296-28	Locknut	2
27	3-1176	Hinge Pin	1
28	3-0674	Deflector	1
29	3-4808	Wing Nut	1
30	322-3	Capscrew	2
31	3253-4	Lockwasher	3
32	5-1592	Belt Retainer	1
33	23-7580	Belt Retainer Assembly	1
34	32149-2	Locknut	2
35	3256-2	Washer	2
36	3-5528	Spacer	2
37	32108-7	Screw	2
38	3290-147	Pal Nut	1

*Not Illustrated

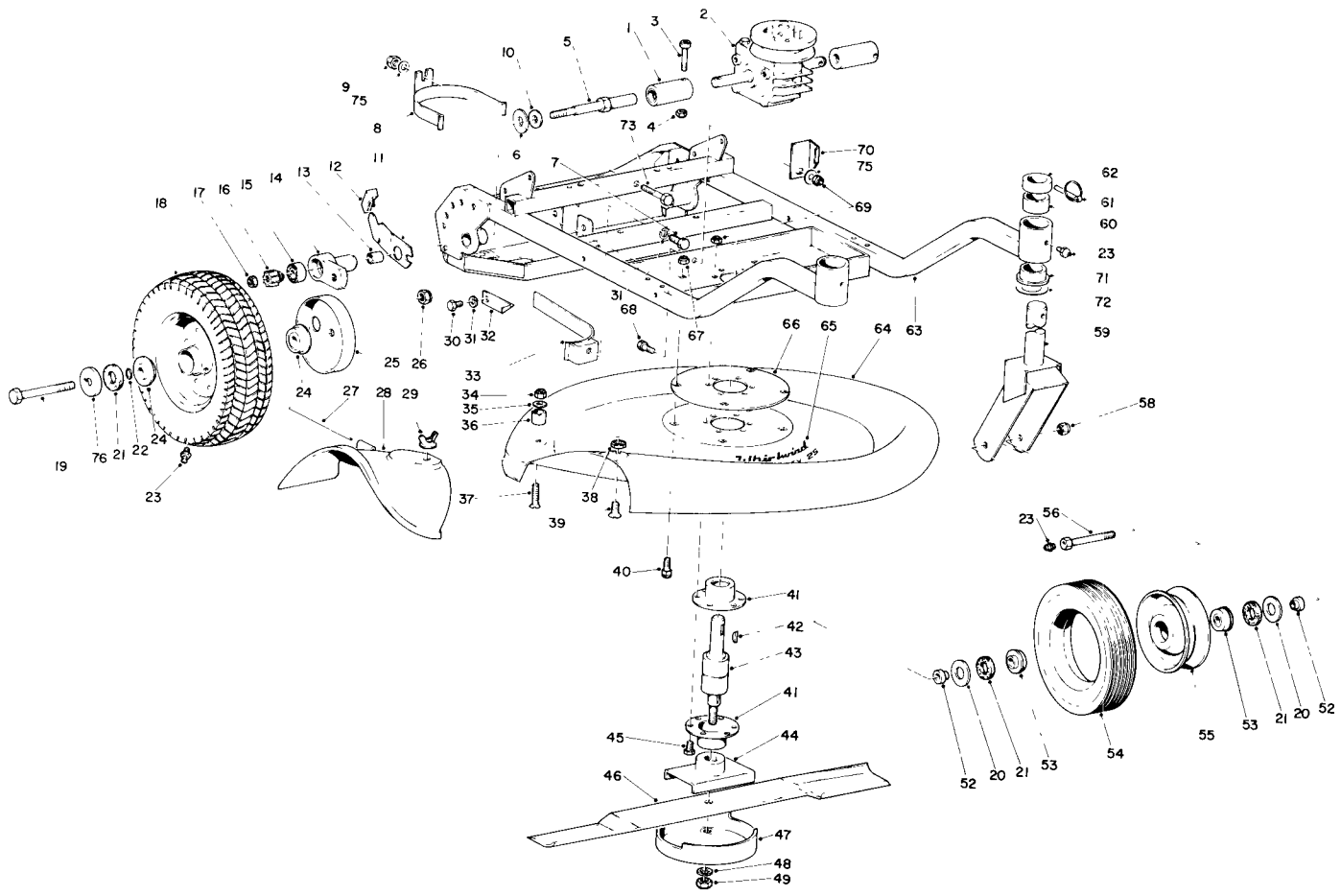

FRAME AND CUTTER HOUSING ASSEMBLY (Continued)

Ref. No.	Part No.	Description	No. Used
39	32108-21	Screw	1
40	3231-12	Carriage Bolt	4
41	3-1931	Bearing Housing	2
42	3257-23	Key	2
43	3-4533	Spindle Bearing	1
44	3-5220	Retainer, Blade	1
45	322-5	Capscrew	6
46	28-0710	Blade	1
47	3-3803	Cup	1
48	3253-27	Lockwasher	1
49	3296-19	Locknut	1
52	10-9270	Spacer	4
53	251-180	Bearing	4
54	234-18	Tire	2
55	3-2179	Wheel (Incl. Ref. #53 & 54)	2
56	10-9300	Axle Bolt	2
58	32146-13	Locknut	2

Ref. No.	Part No.	Description	No. Used
59	10-9380	Caster Fork	2
60	256-101	Bushing	2
61	3290-243	Klik Pin	2
62	10-9310	Spacer	10
63	10-9450	Frame (Incl. Ref. #60 & 71)	1
64	3-4562	Housing	1
65	3-8156	Decal	1
66	3-2118	Plate	1
67	32146-2	Locknut	4
68	322-2	Capscrew	1
69	32146-5	Locknut	7
70	3-8308	Belt Retainer	1
71	256-148	Bushing	2
72	3-0737	Washer	2
73	322-8	Capscrew	1
75	3256-23	Washer	2
76	3-4416	Slinger	2

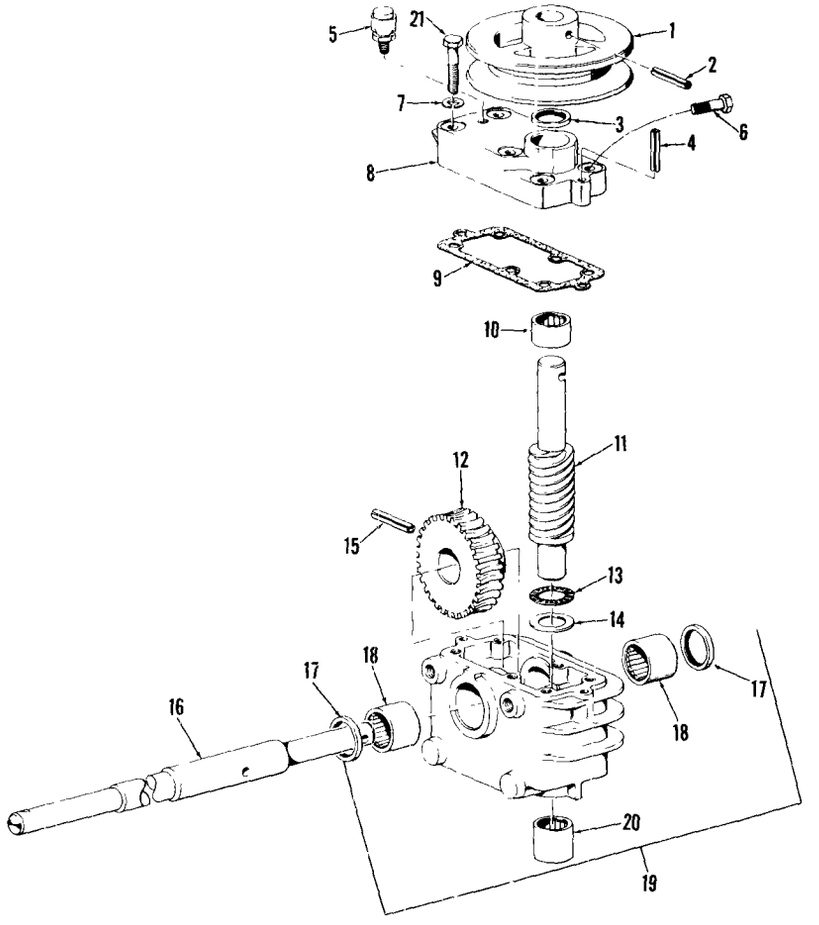

GEAR CASE ASSEMBLY

Ref. No.	Part No	Description	No. Used
1	5-1584	Pulley	1
2	32121-6	Pin	1
3	253-85	Seal, Oil	1
4	32121-2	Pin	2
5	302-14	Vent	1
6	321-8	Screw	2
7	3253 3	Lockwasher	6
8	5-1556	Cover, Gear Case	1
9	3-4512	Gasket	1
10	252-64	Bearing	1
11	5-1563	Shaft, Worm	1

Ref. No.	Part No.	Description	No. Used
12	5-1565	Gear Worm	1
13	252-58	Bearing, Thrust	1
14	252-59	Washer, Thrust	1
15	32121-12	Pin	1
16	5-2123	Drive Shaft	1
17	253-84	Seal, Oil	2
18	252-6	Bearing	2
19	3-7539	Gear Case Assy. w/Bearing (Incl. Ref. # 18 & 20)	1
20	252-57	Bearing	1
21	321-9	Capscrew	4

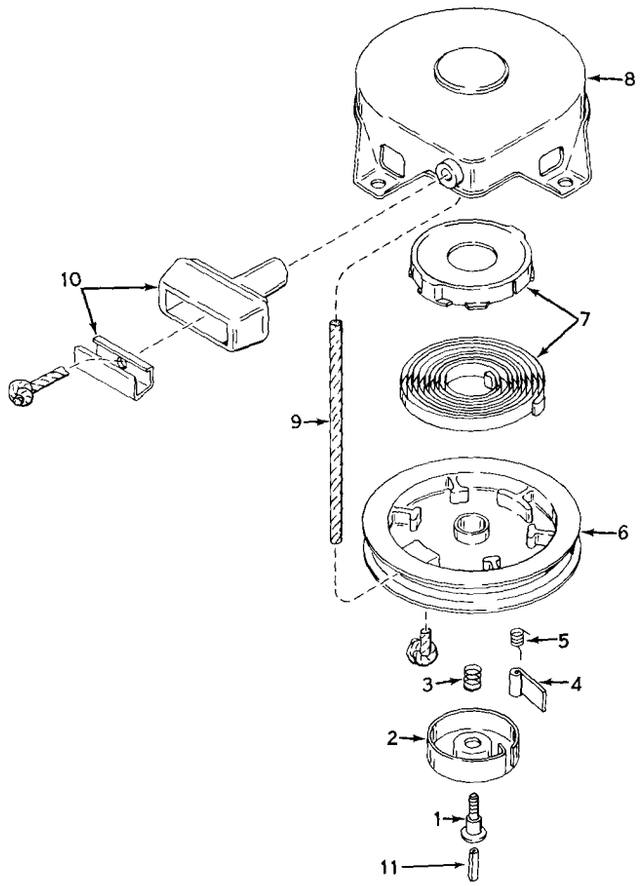

REWIND STARTER NO. 590420

Ref. No.	Part No.	Description	No. Used
1	590409	Screw, Retainer	1
2	590410	Retainer, R.H.	1
3	590411	Spring, Brake	1
4	590148	Dog, Starter	1
5	590412	Spring, R.H. Dog	1
6	590413A	Pulley	1

Ref. No.	Part No.	Description	No. Used
7	590414	Spring & Keeper Assy.	1
8	590415	Housing Assy., Starter	1
9	590386	Rope, Starter	1
10	590387	Handle Assy., Starter	1
11	590459	Pin, Centering	1

ENGINE TECUMSEH MODEL NO. V60-70287J

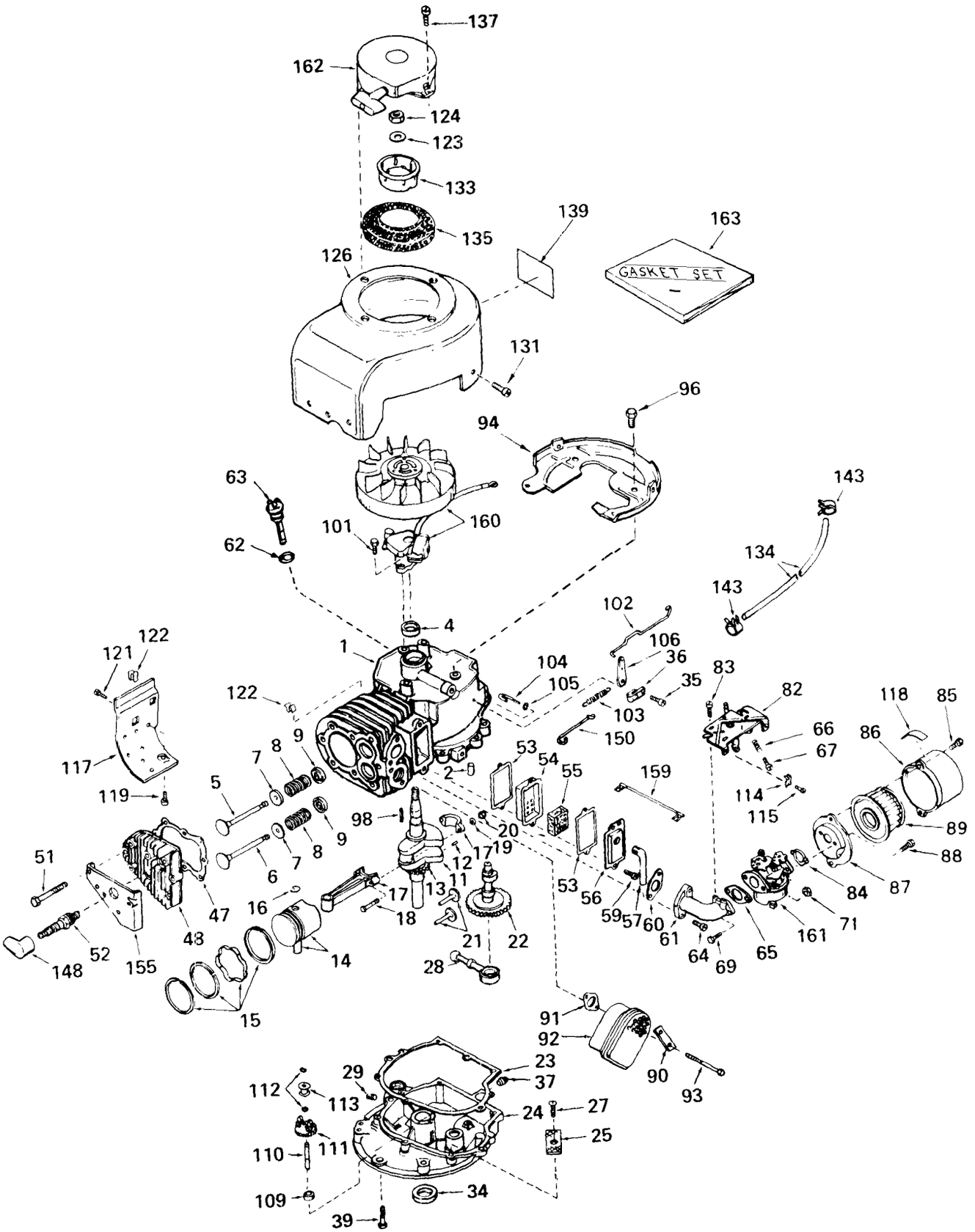

ENGINE TECUMSEH MODEL NO. V60-70287J

Ref. No.	Part No.	Description	No. Used
1	34177	Cylinder Assy. (Incl. # 2, 4, 5 & 63)	1
2	27652	Pin, Dowel	2
4	27876B	Seal, Oil	1
5	32783	Valve, Intake (Std.) (Incl. #9)	1
5	32784	Valve, Intake (1/32" Oversize) (Incl. # 9)	1
6	27878A	Valve, Exhaust (Std.) (Incl. #9)	1
6	27880A	Valve, Exhaust (1/32" Oversize) (Incl. #9)	1
7	27882	Cap, Upper Valve Spring	2
8	27881	Spring, Valve	2
9	32581	Cap, Lower Valve Spring (Std.)	2
11	30896B	Crankshaft Assy. (Incl. # 12 & 13)	1
12	29783	Pin, Crankshaft Gear	1
13	27884	Gear, Crankshaft	1
14	33312	Piston & Pin Assy. (Incl. 2 of # 16) (Std.)	1
14	33313	Piston & Pin Assy. (.010 Oversize) (Incl. 2 of # 16)	1
14	33314	Piston & Pin Assy. (.020 Oversize) (Incl. 2 of # 16)	1
15	33315	Ring Set, Piston (Std.)	1
15	33316	Ring Set, Piston (.010 Oversize)	1
15	33317	Ring Set, Piston (.020 Oversize)	1
16	27888	Ring, Piston Pin Retaining	2
17	31380C	Rod Assy., Connecting (Incl. # 18, 19 & 20)	1
18	30682	Bolt, Connecting Rod	2
19	26073	Washer, Connecting Rod Bolt	2
20	28264	Nut, Connecting Rod	2
21	34034	Lifter, Valve	2
22	32114	Camshaft (Mech. Comp. Release)	1
23	*30684	Gasket, Mounting Flange	1
24	31552C	Flange Assy., Mounting (Incl. # 25, 27, 34, 37 & 110)	1
25	31355	Screen, Oil Filter	1
27	29117	Screw, Slotted Hex Hd. Thread Cutting	1
28	31356	Pump Assy., Oil	1
29	28582	Plug, Oil Drain, Hex Headless	1
34	27897	Seal, Oil	1
35	650548	Screw, Hex Slotted Washer Hd.	1
36	31335	Clamp, Governor Lever	1
37	27642	Plug, Oil Drain, Sq. Hd.	1
39	650488	Screw, Hex Hd. Sems	7
47	*28938B	Gasket, Cylinder Head	1
48	30938A	Head, Cylinder	1
51	650697	Screw, Hex Hd. Cap	8
52	34251	Plug, Spark (Champion RCJ-8)	1
53	*27896	Gasket, Valve Chamber Cover	2
54	28423	Body Assy., Breather	1
55	28424	Element, Breather	1
56	28425	Cover, Valve Chamber	1
57	27627	Tube, Breather	1
59	650128	Screw, Fil. Slotted Hd. Sems	2
60	*27915	Gasket, Intake Pipe	1
61	31358	Pipe, Intake	1
62	*29673	Gasket, Dipstick	1
63	34165	Dipstick, Oil (Incl. # 62)	1
64	650378	Screw, Fil. Hd. Sems	2
65	*26756	Gasket, Carburetor	1
66	31342	Spring, Compression	1
67	650549	Screw, Fil. Slotted Hd. Mach.	1
69	6201	Screw, Hex Hd. Cap	2
71	29752	Nut & Lockwasher	2
82	32181	Control Assembly, Speed (Incl. # 66 & 67)	1
83	30200	Screw, Hex Hd. Self-Tapping Sems	2
84	*27272	Gasket, Air Cleaner	1
85	650152	Screw, Fil. Slotted Hd. Sems	2
86	31692	Body, Air Cleaner	1
87	31691	Bracket, Air Cleaner	1
88	28820	Screw, Phil. Fil. Hd. Mach. Sems	2
89	30727	Element, Air Cleaner	1
90	31588	Plate, Locking	1
91	*27930	Gasket, Muffler	1
92	28269	Muffler	1
93	650696	Screw, Hex Hd. Cap	2
94	29536	Baffle, Blower Housing	1
96	650561	Screw, Phil. Hex Hd. Sems	2
98	30884	Key, Flywheel	1
101	650489	Screw, Hex Hd. Sems	2
102	31823	Link, Throttle	1
103	31361	Spring, Governor	1
104	30669	Rod, Governor (Incl. # 105)	1
105	28277	Washer, Flat	1
106	31357	Lever, Governor	1
109	31707	Spacer	1
110	30668	Shaft, Mechanical Governor	1
111	30591	Gear Assy., Governor	1
112	29193	Ring, Retaining	2
113	30588A	Spool, Governor	1
114	27793	Clip, Conduit	1
115	28942	Screw, Hex Hd. Slotted Sems	1
117	30622	Extension, Blower Housing	1
118	31752	Decal, Air Cleaner	1
119	650128	Screw, Fil. Slotted Hd. Sems	1
121	30688	Screw, Hex Hd. Cap Sems	1
122	27275	Clip, Hi-tension Wire Retaining	2
123	650490	Washer, Belleville	1
124	8116	Nut, Hex	1
126	32223A	Housing, Blower	1
131	29747A	Screw, Hex Hd. Sems Cap	2
133	32125	Cup, Starter	1
134	30962	Line, Fuel	1
135	590417	Screen, Starter Cup	1
137	29716	Screw, Phil. Pan Hd. Sems	4
139	31865	Decal, Name & Instruction	1
143	26460	Clamp, Fuel Line	2
148	610118	Cover, Spark Plug	1
150	32582	Link, Governor Spring	1
155	30939A	Cover, Cylinder Head	1
159	28468	Wire, Ground	1
160	610689A	Magneto (The complete magneto is not available as an assembly. The magneto number is shown for reference purposes only. Order component parts individually, as shown in parts list.)	1
161	631165	Carburetor (Incl. # 65)	1
162	590420	Starter, Rewind	1
163	33234A	Gasket Set (Incl. Items Marked *)	1

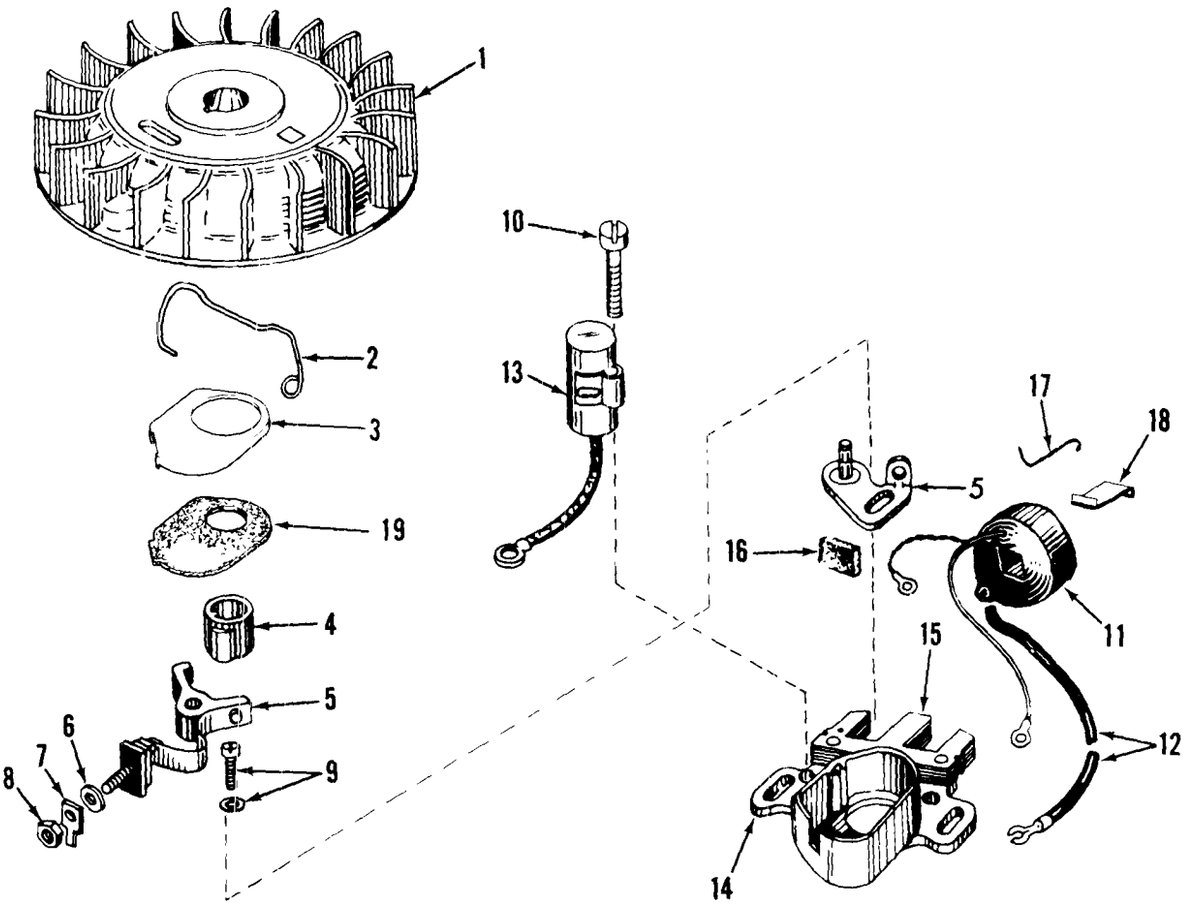

*MAGNETO MODEL NO. 610689A

Ref. No.	Part No.	Description	No. Used
1	30555	Flywheel	1
2	30551	Spring, Breaker Box Dust Cover	1
3	610947	Cover, Breaker Box Dust	1
4	30992	Cam, Breaker	1
5	30547A	Contact Assy., Breaker	1
6	610385	Washer, Terminal	1
7	33356	Tab, Ground Terminal	1
8	610408	Nut, Terminal	1
9	29181	Screw & Washer, Breaker	1
10	610593	Screw, Condenser Fastening	1
11	30560A	Coil Assy. (Incl. # 12)	1

Ref. No.	Part No.	Description	No. Used
12	30554	Wire, Lead	1
13	30548A	Condenser	1
14	30545	Core & Plate	1
15	30561B	Stator Assy. (Incl. # 2, 3 5 thru 14 & 16 thru 19)	1
16	30549	Felt, Cam Wiper	1
17	31311	Clip, Coil Locking	1
18	29629	Spring, Coil Wedge	1
19	610955	Gasket, Dust Cover	1
19	610956	Gasket, Dust Cover	1

*The complete magneto is not available as an assembly. The magneto number is shown for reference purposes only. Order component parts individually, as shown in parts list.

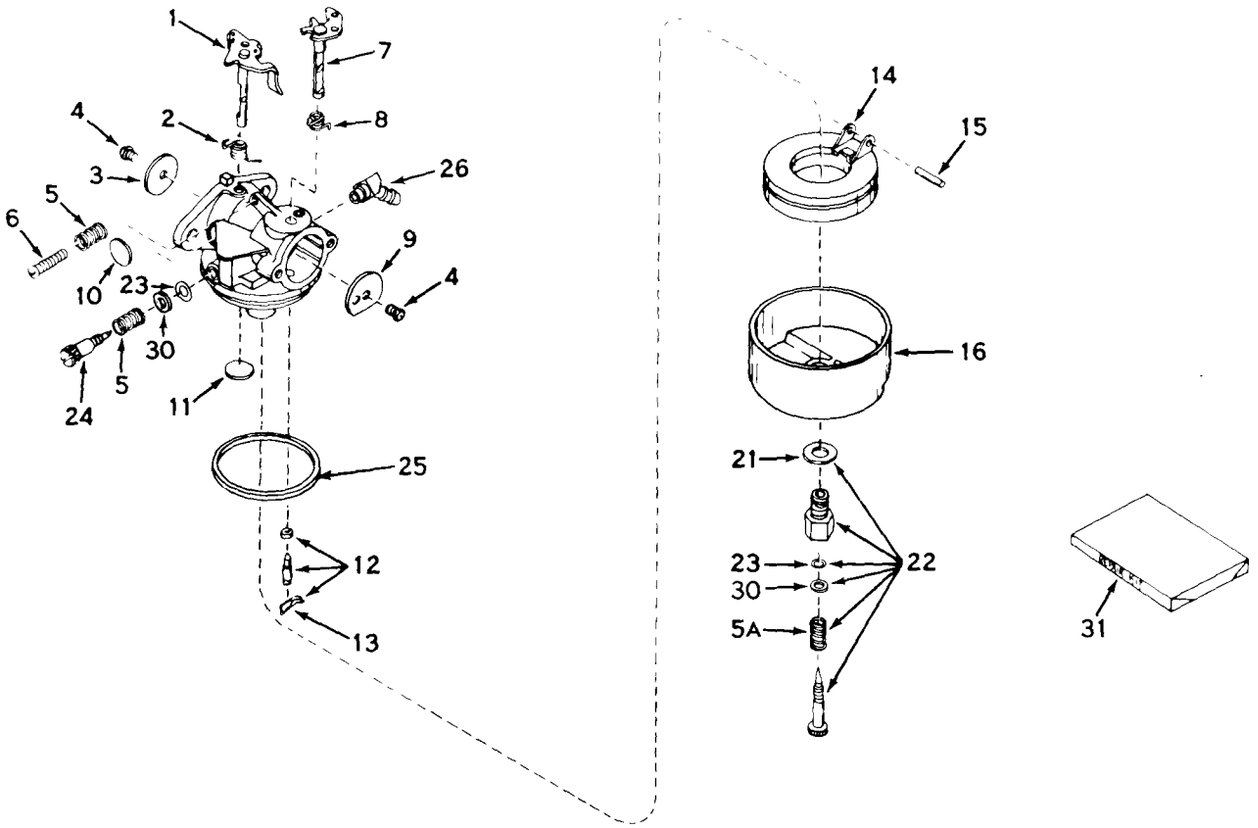

CARBURETOR MODEL NO. 631165

Ref. No.	Part No.	Description	No. Used
1	31834	Shaft & Lever Assy., Throttle	1
2	631279	Spring, Throttle Return	1
3	631036	Shutter, Throttle	1
4	650506	Screw, Rd. Hd.	2
5	630766	Spring, Idle Regulating Screw	2
5A	630738	Spring, Main Adjustment Screw	1
6	650417	Screw, Idle Regulating	1
7	630973	Shaft & Lever Assy., Choke	1
8	630821	Spring, Choke Return	1
9	631037	Shutter, Choke	1
10	*630748	Plug, Welch	1
11	*631027	Plug, Welch	1
12	*631021	Inlet Needle, Seat & Clip Assembly (Incl. # 13)	1

Ref. No.	Part No.	Description	No. Used
13	631022	Clip, Inlet Needle	1
14	631023	Float, Carburetor	1
15	*631024	Shaft & Float	1
16	631867	Bowl, Float	1
21	27110	Gasket, Bowl-To-Body	1
22	*631026	Adjustment Screw Assy., Main (Incl. #5A, 21, 23 & 30)	1
23	*630740	"O" Ring Adjustment Screw	2
24	*631078	Screw, Idle Adjustment	1
25	*631028	Gasket, Bowl-To-Body	1
26	631808	Fitting, Fuel Inlet	1
30	630739	Washer	2
31	631029	Repair Kit (Incl. Items Marked *)	1

PRODUCT CHANGES

In an effort to make improvements available to TORO owners as quickly as possible, minor changes are incorporated into Toro's products from time to time that do not become immediately shown in the Parts Catalog. If such a change apparently has been made in your unit, which is not reflected in your manual, see your TORO Distributor for information and part numbers.

IDENTIFICATION AND ORDERING

Model and Serial Numbers

The 25" Whirlwind Hevi-Duty has two identification numbers: a model number and a serial number. The two numbers are stamped on a decal which is located on right hand side of rear shroud. In any correspondence concerning the 25" Whirlwind Hevi-Duty, supply model and serial numbers to assure that correct information and replacement parts are obtained.

To order replacement parts from an Authorized TORO Distributor, supply the following information:

1. Model and serial numbers of the 25" Whirlwind Hevi-Duty.
2. Part number, description, and quantity of part(s) desired.

NOTE Do not order by reference number if a parts catalog is being used; use the PART NUMBER.

The Toro Promise

A One Year Limited Warranty on Turf Products Other Than Walk Rotary Mowers

The Toro Company promises to repair any TORO Product if defective in materials or workmanship. The following time periods from the date of purchase apply:

Turf Products	1 Year
Hevi-Duty Walk Rotary Mowers	90 Days

The costs of parts and labor are included, but the customer pays the transportation costs on walk rotary mowers.

Should you feel your TORO is defective and wish to rely on The Toro Promise, the following procedure is recommended

1. Contact your Authorized TORO Distributor (the Yellow Pages of your telephone directory is a good reference source).
2. The TORO Distributor will advise you on the arrangements that can be made to inspect and repair your product.
3. The TORO Distributor will inspect the product and advise you whether the product is defective and, if so, make all repairs necessary to correct the defect without extra charge to you.

If for any reason you are dissatisfied with the distributor's analysis of the defect or the service performed, you may contact us.

Write:

TORO Turf Products Service Department
8111 Lyndale Avenue South
Minneapolis, Minnesota 55420

The above remedy of product defects through repair by an Authorized TORO Distributor is the purchaser's sole remedy for any defect.

THERE IS NO OTHER EXPRESS WARRANTY. ALL IMPLIED WARRANTIES OF MERCHANTABILITY AND FITNESS FOR USE ARE LIMITED TO THE DURATION OF THE EXPRESS WARRANTY.

Some states do not allow limitation on how long implied warranty lasts, so the above limitation may not apply to you.

This Warranty applies only to parts or components which are defective and does not cover repairs necessary due to normal wear, misuse, accidents, or lack of proper maintenance. Regular, routine maintenance of the unit to keep it in proper operating condition is the responsibility of the owner.

All warranty repairs reimbursable under The Toro Promise must be performed by an Authorized TORO Distributor using Toro approved replacement parts.

Repairs or attempted repairs by anyone other than an Authorized TORO Distributor are not reimbursable under The Toro Promise. In addition, these unauthorized repair attempts may result in additional malfunctions, the correction of which is not covered by warranty.

The Toro Company is not liable for indirect, incidental or consequential damages in connection with the use of the product including any cost or expense of providing substitute equipment or service during periods of malfunction or non-use.

Some states do not allow the exclusion of incidental or consequential damages, so the above exclusion may not apply to you.

This warranty gives you specific legal rights, and you may also have other rights which vary from state to state.

Compliance with Radio Interference Regulations Certified.
Certifie Conforme au Reglement sur le Brouillage Radioelectrique.

Litho in U.S.A.