Form No. 3447-962 Rev A

TORO®

Count on it.

Parts Catalog

# Workman® MDX

## Utility Vehicle

**Model No. 07235TC—Serial No. 409700000 and Up**

Register at www.Toro.com.
Original Instructions (EN)

*3447-962* A

# Ordering Replacement Parts

To order replacement parts, please supply the part number, the quantity, and the description of each part desired.

### Understanding Reference Numbers

Each identified part in an illustration has a reference number. The reference number for a part also appears in the parts list, along with other information about the part.

This catalog uses two special reference number formats, one to indicate parts in a service assembly and another to indicate the quantity of a given part in an illustration.

### Service Assembly Reference Numbers

Parts in service assemblies have reference numbers in the form a:b. The a represents the reference number of the entire service assembly and the b represents a sequential number unique to each part within the service assembly.

For example, a wheel assembly might be identified by reference number 6, the tire by 6:1, the valve by 6:2, and the wheel by 6:3. When you order the assembly identified by reference number 6, you receive all parts identified by reference numbers 6:1,6:2, and 6:3. However, you may also order any part individually. Reference numbers of this type appear in illustration and in parts lists.

### Reference Numbers Indicating Quantity

In an illustration, if a reference number indicates more than one part, the reference number has the form nX y. The n represents the quantity of the part, the X is the multiplication symbol, and the y represents the reference number.

For example, in an illustration, the reference number 2X 37 means that two of the parts identified by reference number 37 are indicated.

# Contents

Front Frame and Suspension Assembly . . . 4
Rear Frame and Suspension Assembly . . . 6
Front Brake Assembly . . . 7
Master Cylinder Assembly No. 104-6782 . . . 8
Brake Caliper Assembly No. 127-7424 . . . 9
Rear Brake Assembly . . . 10
RH Rear Brake Assembly No. 114-8331 . . . 11
LH Rear Brake Assembly No. 114-8332 . . . 12
Steering Assembly . . . 13
Pedal Assembly . . . 14
Shifter Assembly . . . 15
Hood and Fender Assembly . . . 16
Dash Assembly . . . 17
Control Panel Assembly . . . 18
Seatbase Assembly . . . 19
Cargo Bed Assembly . . . 20
Cargo Bed and Tailgate Service Assembly No. 133-0560 . . . 21
Engine, Clutch and Air Cleaner Assembly . . . 22
Primary Clutch Assembly No. 138-0094 . . . 24
Air Cleaner Assembly No. 99-7120 . . . 25
Battery Assembly . . . 26
Rear Axle Drive System Assembly . . . 27
Transaxle Assembly No. 119-0760 . . . 28
Secondary Clutch Assembly No. 136-6289 . . . 30
Electrical Assembly . . . 31
Starter Generator Assembly No. 131-8444 . . . 32
Fuel Tank Assembly . . . 33
Attachments and Accessories . . . 34

**© 2021—The Toro® Company**
**8111 Lyndale Avenue South**
**Bloomington, MN 55420**



**Contact us at www.Toro.com.**
**Printed in the USA.**
**All Rights Reserved**

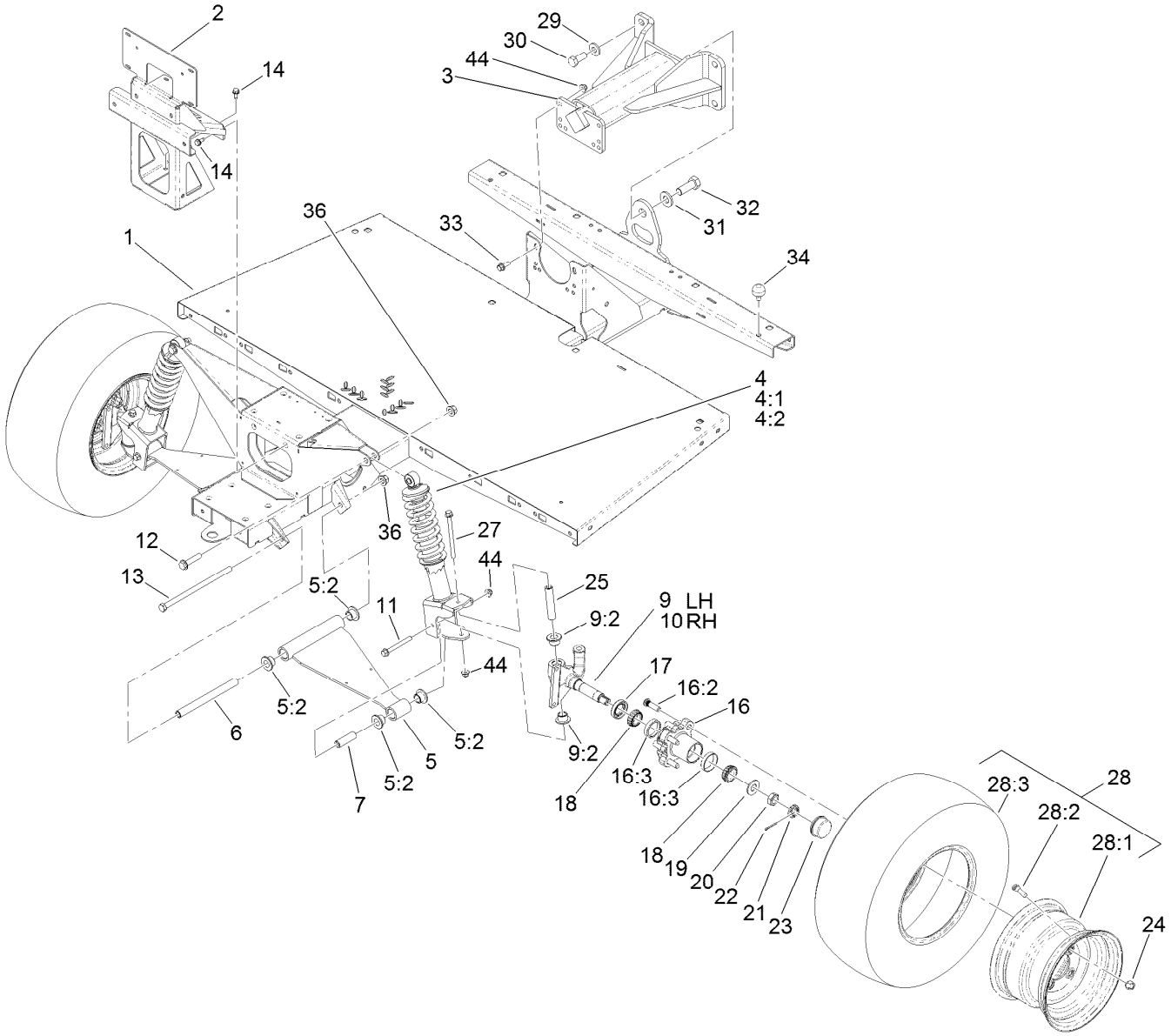


# Front Frame and Suspension Assembly

| Ref. | Part Number | Qty. | Description |
|---|---|---|---|
| 1 | 132-6735-03 | 1 | Frame-Front |
| 2 | 132-6736-03 | 1 | Support-Bumper |
| 3 | 99-7700 | 1 | Yoke-Pivot |
| 4 | 132-6791 | 2 | Strut ASM |
| 4:1 | 133-0556 | 1 | Spring-Coil |
| 4:2 | 131-8574 | 1 | Isolator-Shock |
| 5 | 144-2160 | 2 | Control Arm ASM |
| 5:2 | 140-4615 | 4 | Bushing-Flange |
| 6 | 133-0595 | 2 | Sleeve-Control Arm, Inner |
| 7 | 131-8583 | 2 | Sleeve-Control Arm, Outer |
| 9 | 144-2162 | 1 | Spindle ASM, LH |
| 9:2 | 140-4615 | 2 | Bushing-Flange |
| 10 | 144-2163 | 1 | Spindle ASM, RH ● |
| 10:2 | 140-4615 | 2 | Bushing-Flange ● |
| 11 | 139-3370 | 2 | Screw-HF |
| 12 | 3234-46 | 2 | Screw-HHF |
| 13 | 325-39 | 2 | Screw-HH |
| 14 | 32144-70 | 6 | Screw-HWHTF |

| Ref. | Part Number | Qty. | Description |
|---|---|---|---|
| 16 | 127-8851 | 2 | Front Hub ASM |
| 16:2 | 10-6830 | 4 | Stud-Type, Drive |
| 16:3 | 254-72 | 2 | Bearing-Cup, Tapered |
| 17 | 112-1690 | 2 | Seal-Oil |
| 18 | 254-94 | 4 | Bearing-Cone, Tapered |
| 19 | 93-0309 | 2 | Washer-Tab |
| 20 | 3220-7 | 2 | Nut-Jam |
| 21 | 93-0307 | 2 | Nut-Lock, Retainer |
| 22 | 3272-12 | 2 | Pin-Cotter |
| 23 | 241-119 | 2 | Cap-Dust |
| 24 | 242-50 | 8 | Nut-Lug |
| 25 | 131-8582 | 2 | Sleeve-Kingpin |
| 27 | 139-3350 | 2 | Screw-HF |
| 28 | 133-0579 | 2 | Wheel And Tire ASM |
| 28:1 | 133-0590 | 1 | Wheel |
| 28:2 | 127-7435 | 1 | Tire (22 X 9.50-10) 4-Ply |
| 28:3 | 232-27 | 1 | Stem-Valve |
| 29 | 99-7667 | 4 | Washer-Flat |

● Not illustrated

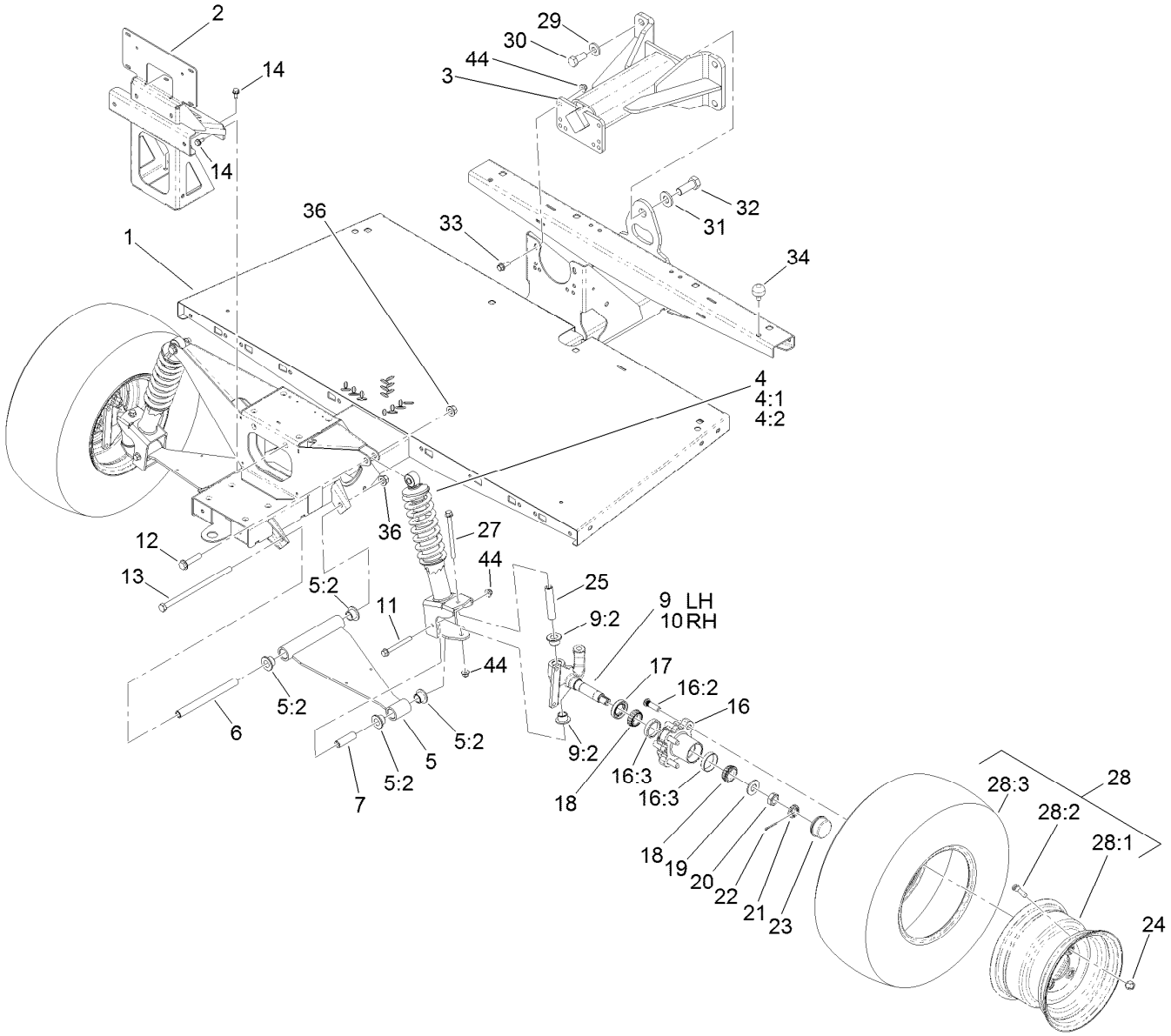


# Front Frame and Suspension Assembly (continued)

| Ref. | Part Number | Qty. | Description |
|---|---|---|---|
| 30 | 327-4 | 4 | Screw-HH |
| 31 | 87-3060 | 1 | Washer-Hardened |
| 32 | 328-24 | 1 | Screw-HH |
| 33 | 131-2220 | 4 | Screw-HHF |

| Ref. | Part Number | Qty. | Description |
|---|---|---|---|
| 34 | 87-2440 | 1 | Bumper-Rubber |
| 36 | 99-5107 | 4 | Nut-Lock |
| 44 | 139-3380 | 8 | Nut-HF |

● Not illustrated

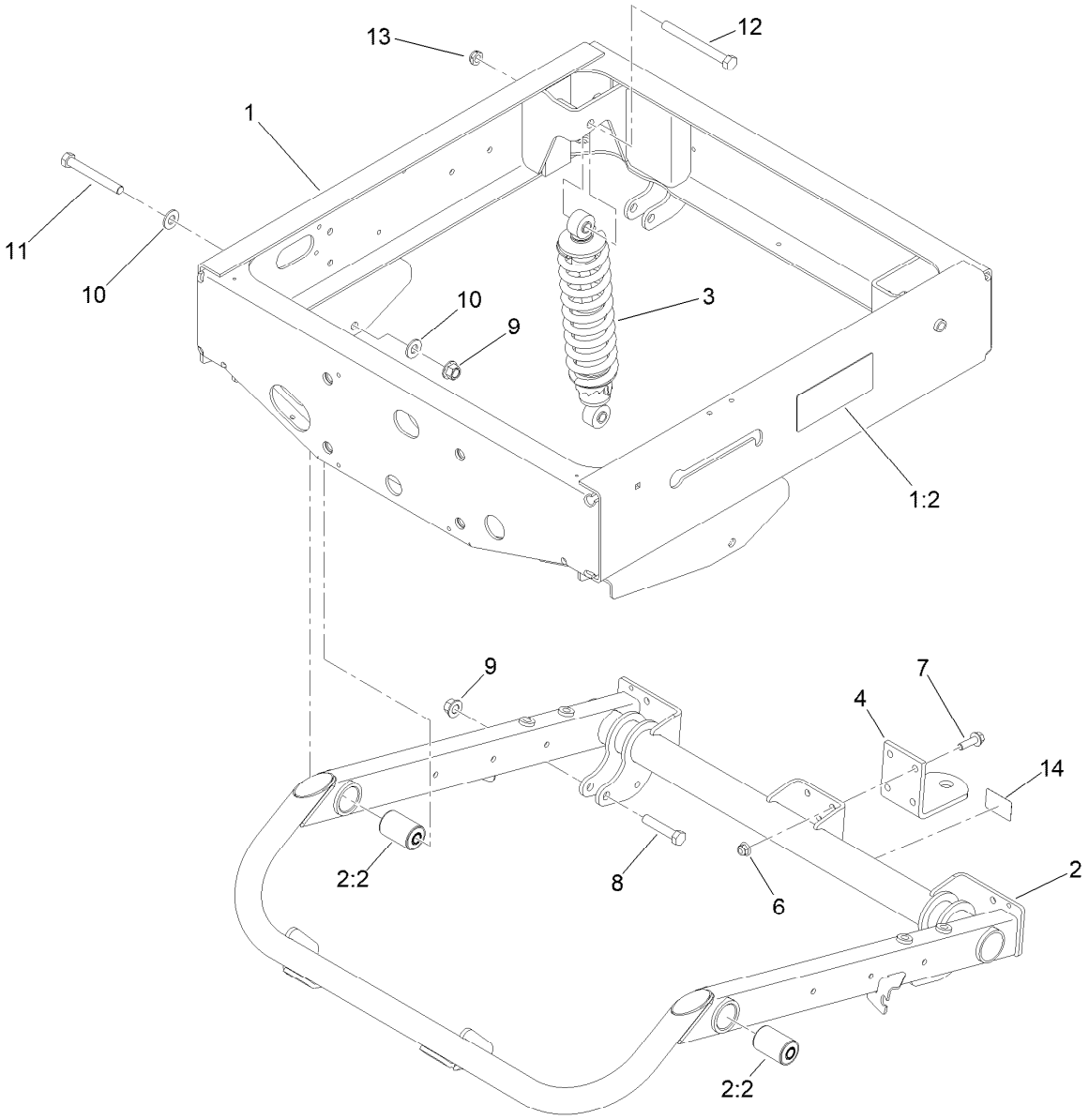


# Rear Frame and Suspension Assembly

| *Ref.* | *Part Number* | *Qty.* | *Description* |
|---|---|---|---|
| 1 | 133-0610 | 1 | Frame-Rear |
| 1:2 | 99-7345 | 2 | Decal-Warning |
| 2 | 140-2596 | 1 | Swing Arm ASM |
| 2:2 | 112-3377 | 2 | Bushing-Arm, Control |
| 3 | 133-0553 | 2 | Shock And Spring ASM |
| 4 | 99-7654-03 | 1 | Hitch-Duty, Light |
| 6 | 104-8301 | 4 | Nut-HF, NI |
| 7 | 3234-24 | 4 | Screw-HHF |
| 8 | 325-10 | 2 | Screw-HH |
| 9 | 99-5107 | 4 | Nut-Lock |
| 10 | 87-7270 | 4 | Washer-Thrust |
| 11 | 325-17 | 2 | Screw-HH |
| 12 | 325-19 | 2 | Screw-HH |
| 13 | 3296-45 | 2 | Nut-Hex |
| 14 | 136-1164 | 1 | Decal-Load, Towing |

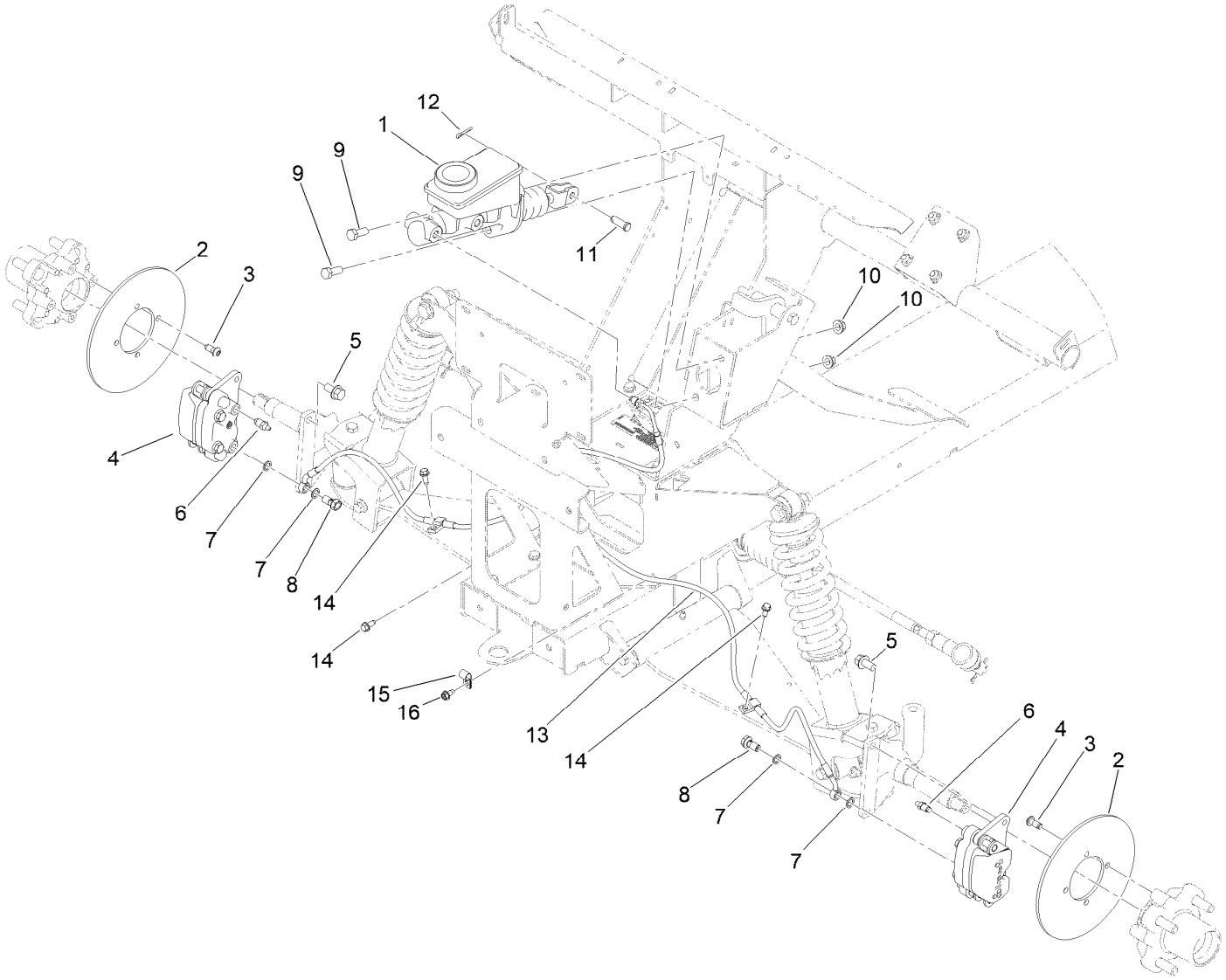


# Front Brake Assembly

| Ref. | Part Number | Qty. | Description |
|---|---|---|---|
| 1 | 104-6782 | 1 | Master Cylinder ASM |
| 2 | 136-6295 | 2 | Rotor-Brake |
| 3 | 121-9671 | 8 | Screw-HSBH |
| 4 | 127-7424 | 2 | Brake Caliper ASM |
| 5 | 3234-1 | 4 | Screw-HHF |
| 6 | 119-9509 | 2 | Screw-Bleed |
| 7 | 115-2341 | 4 | Washer-Banjo |
| 8 | 120-4875 | 2 | Bolt-Flange, Banjo |

| Ref. | Part Number | Qty. | Description |
|---|---|---|---|
| 9 | 323-6 | 2 | Screw-HH |
| 10 | 104-8301 | 2 | Nut-HF, NI |
| 11 | 283-2 | 1 | Pin-Clevis |
| 12 | 3272-10 | 1 | Pin-Cotter |
| 13 | 132-6793 | 1 | Line-Brake, Front |
| 14 | 32144-10 | 3 | Screw-HWH |
| 15 | 2412-89 | 1 | Clamp-R |
| 16 | 32104-17 | 1 | Screw-HWH |

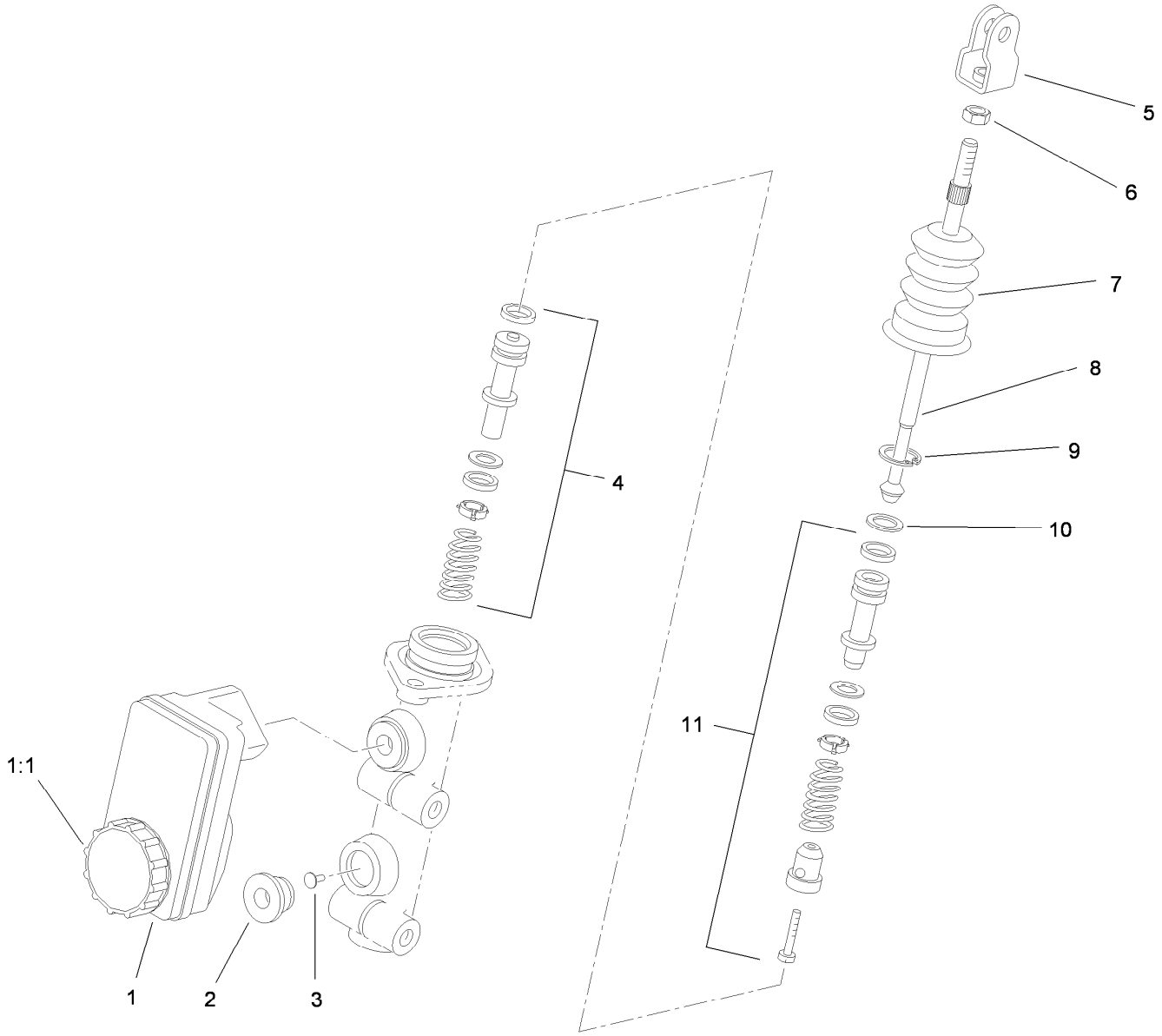


# Master Cylinder Assembly No. 104-6782

| *Ref.* | *Part Number* | *Qty.* | *Description* |
|---|---|---|---|
| 1 | 104-6845 | 1 | Reservoir ASM |
| 1:1 | 92-4112 | 1 | Cap ASM |
| 2 | 93-8971 | 2 | Seal-Port, Flange |
| 3 | 92-4103 | 1 | Pin-Stop |
| 4 | 92-4102 | 1 | Secondary Piston ASM |
| 5 | 92-4110 | 1 | Clevis |
| 6 | 21-0360 | 1 | Nut-Hex |
| 7 | 94-5209 | 1 | Cover-Dust |
| 8 | 94-5210 | 1 | Rod-Push |
| 9 | 92-4109 | 1 | Ring-Snap |
| 10 | 92-4108 | 1 | Retainer-Washer |
| 11 | 92-4101 | 1 | Primary Piston ASM |

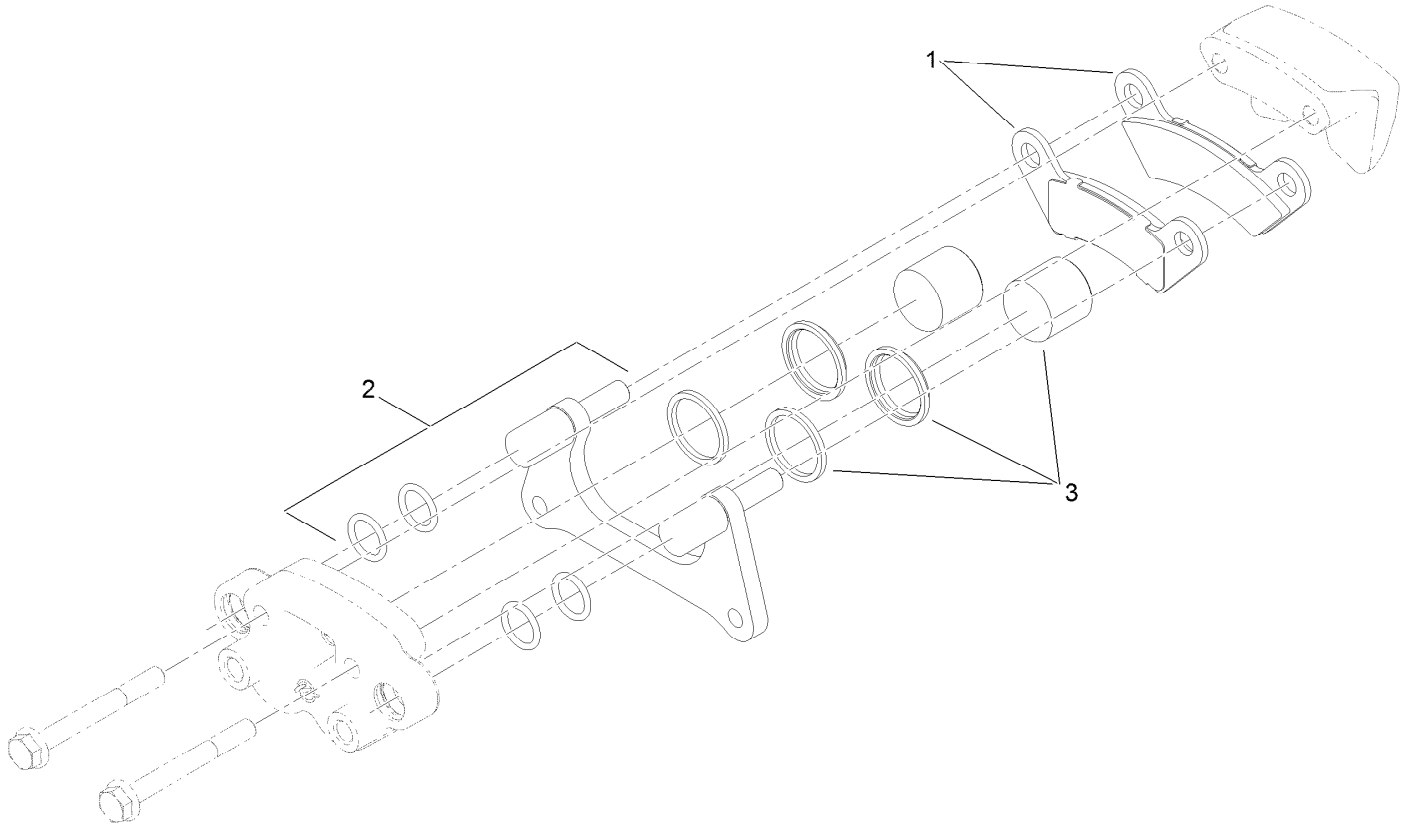


# Brake Caliper Assembly No. 127-7424

| *Ref.* | *Part Number* | *Qty.* | *Description* |
|---|---|---|---|
| 1 | 133-0628 | 1 | Brake Pad Kit |
| 2 | 119-9511 | 1 | Bracket Kit |
| 3 | 133-0614 | 1 | Piston Kit |

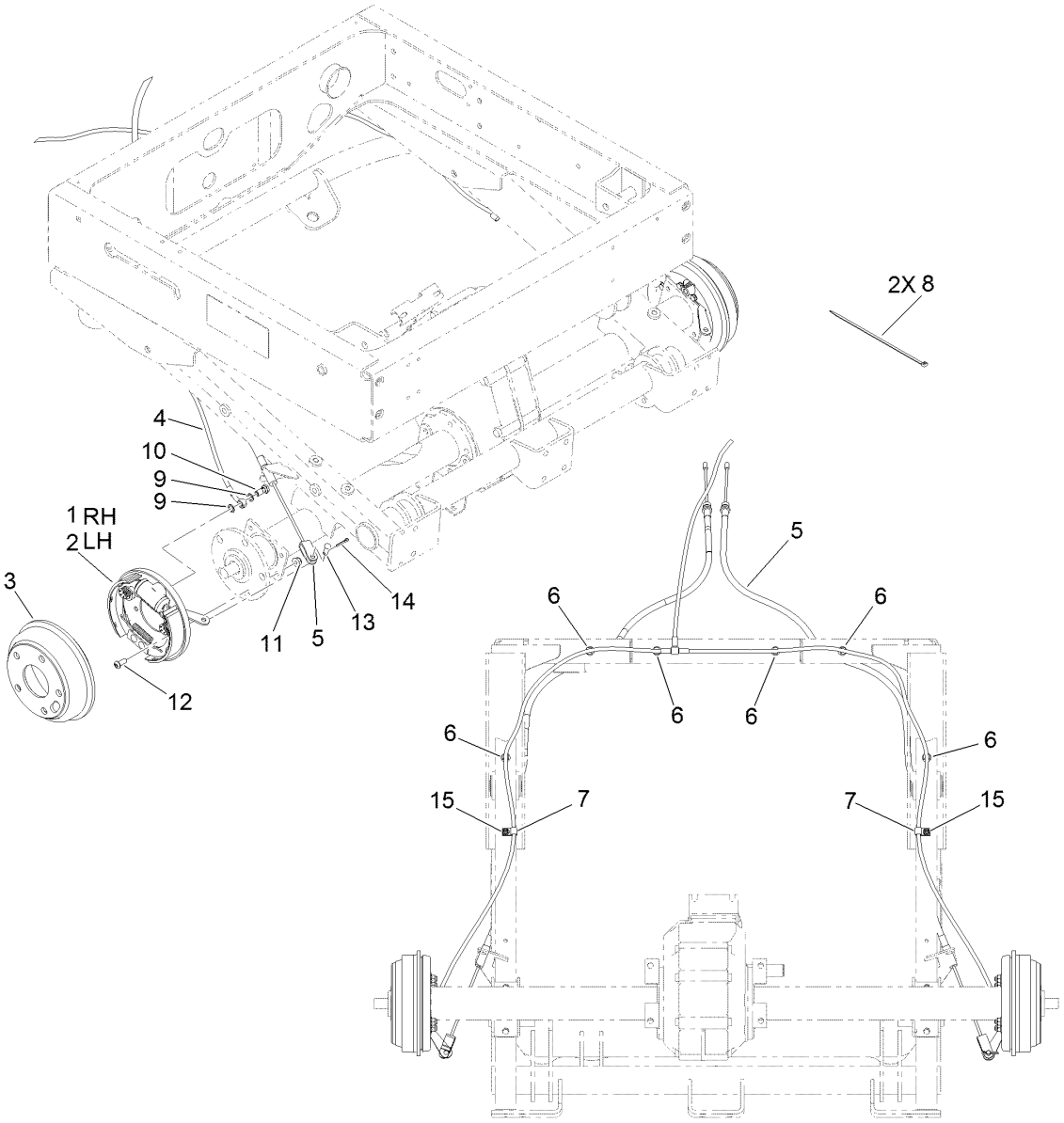


# Rear Brake Assembly

| Ref. | Part Number | Qty. | Description |
|---|---|---|---|
| 1 | 114-8331 | 1 | RH Brake ASM |
| 2 | 114-8332 | 1 | LH Brake ASM |
| 3 | 104-6500 | 2 | Drum-Brake |
| 4 | 112-2926 | 1 | Rear Brake Line ASM |
| 5 | 127-8684 | 2 | Cable-Brake, Adjustable |
| 6 | 32180-030 | 6 | Clip-Tie |
| 7 | 2412-89 | 2 | Clamp-R |
| 8 | 3290-378 | 2 | Tie-Cable |
| 9 | 115-2341 | 4 | Washer-Banjo |
| 10 | 115-2340 | 2 | Bolt-Banjo |
| 11 | 104-8300 | 8 | Nut-HF, NI |
| 12 | 3274-55 | 8 | Screw-HSBH |
| 13 | 283-62 | 2 | Pin-Clevis |
| 14 | 3272-10 | 2 | Pin-Cotter |
| 15 | 32104-17 | 2 | Screw-HWH |

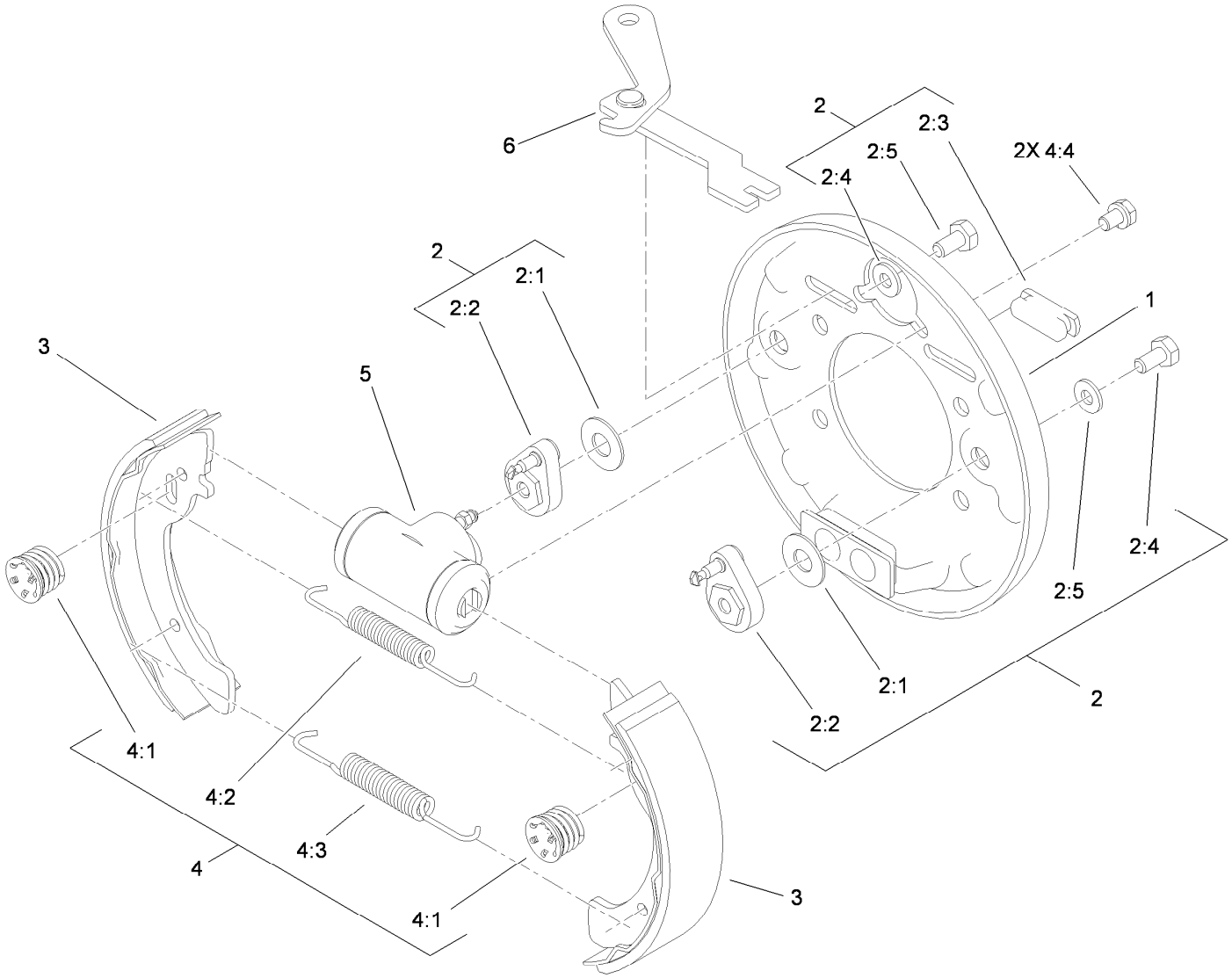


# RH Rear Brake Assembly No. 114-8331

| *Ref.* | *Part Number* | *Qty.* | *Description* |
|---|---|---|---|
| 1 | 100-8586 | 1 | Backing Plate ASM |
| 2 | 104-6820 | 1 | Adjuster Kit |
| 2:1 | 100-8585 | 2 | Washer-Bellville |
| 2:2 | 100-8588 | 2 | Adjuster Lever ASM |
| 2:3 | 100-8584 | 2 | Cover-Dust |
| 2:4 | | 2 | Washer ● |
| 2:5 | | 2 | Bolt ● |
| 3 | 104-6818 | 4 | Shoe And Lining Kit |
| 4 | 104-6819 | 1 | Hardware Kit |
| 4:1 | 100-8583 | 4 | Shoe Hold Down Spring ASM |
| 4:2 | 100-8581 | 2 | Spring-Upper |
| 4:3 | 100-8582 | 2 | Spring-Lower |
| 4:4 | 139-4494 | 4 | Bolt And Washer ASM |
| 5 | 114-8333 | 1 | Wheel Cylinder ASM |
| 6 | 104-6826 | 1 | RH Park Brake Lever ASM |

● Not serviced separately

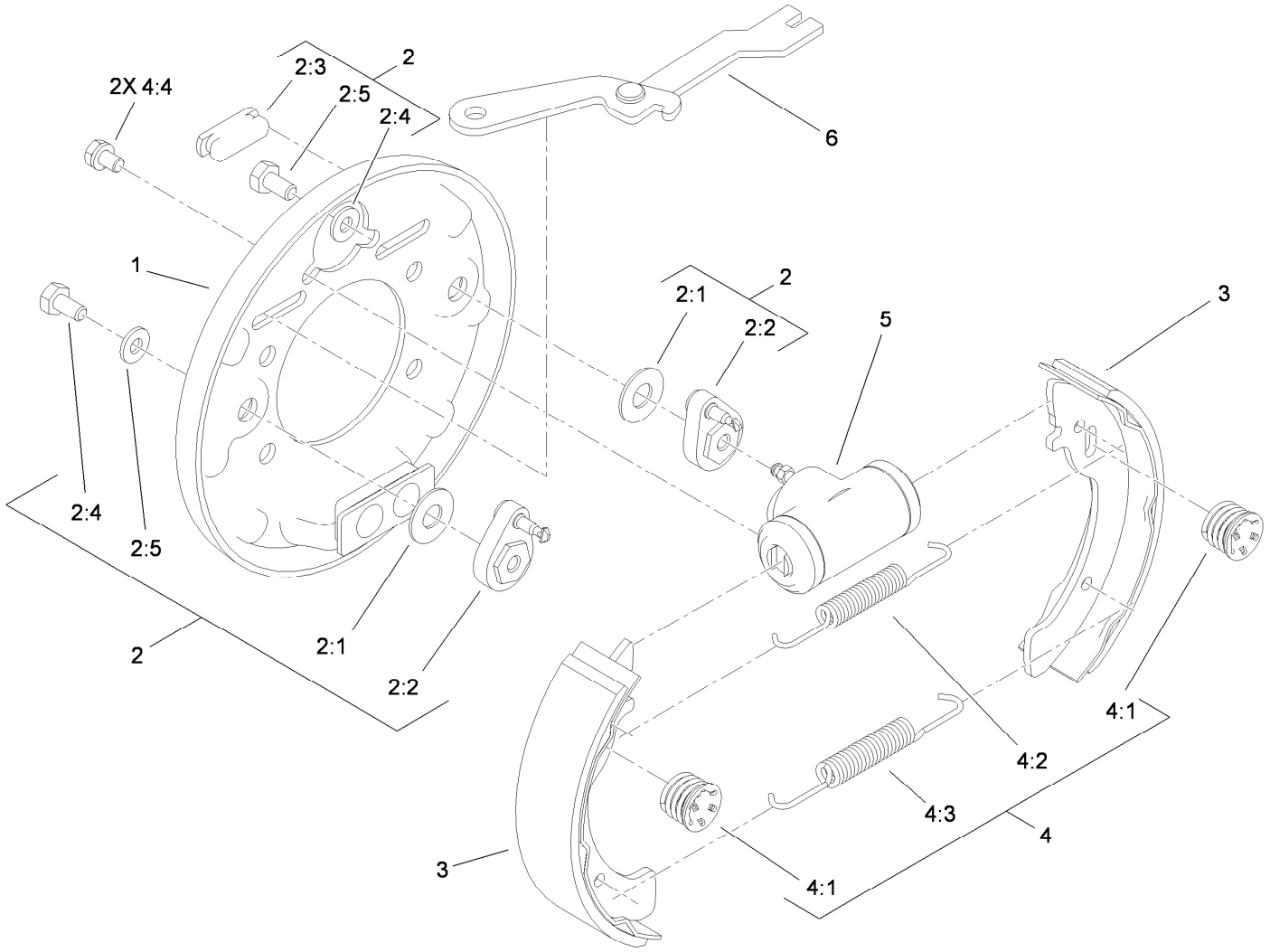


# LH Rear Brake Assembly No. 114-8332

| *Ref.* | *Part Number* | *Qty.* | *Description* |
|---|---|---|---|
| 1 | 100-8586 | 1 | Backing Plate ASM |
| 2 | 104-6820 | 1 | Adjuster Kit |
| 2:1 | 100-8585 | 2 | Washer-Bellville |
| 2:2 | 100-8588 | 2 | Adjuster Lever ASM |
| 2:3 | 100-8584 | 2 | Cover-Dust |
| 2:4 | | 2 | Washer ● |
| 2:5 | | 2 | Bolt ● |
| 3 | 104-6818 | 4 | Shoe And Lining Kit |
| 4 | 104-6819 | 1 | Hardware Kit |
| 4:1 | 100-8583 | 4 | Shoe Hold Down Spring ASM |
| 4:2 | 100-8581 | 2 | Spring-Upper |
| 4:3 | 100-8582 | 2 | Spring-Lower |
| 4:4 | 139-4494 | 4 | Bolt And Washer ASM |
| 5 | 114-8333 | 1 | Wheel Cylinder ASM |
| 6 | 104-6825 | 1 | LH Park Brake Lever ASM |

● Not serviced separately

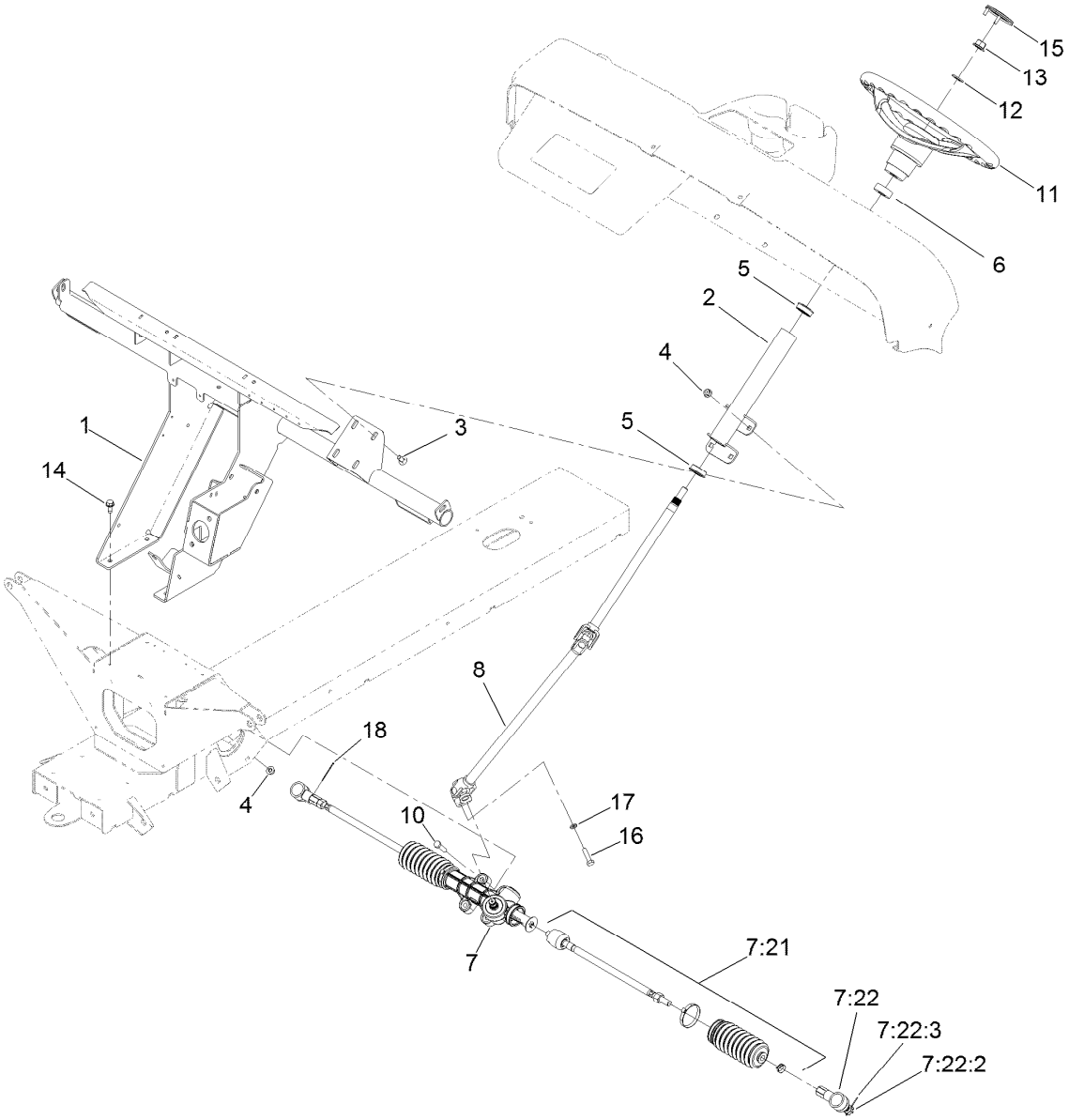


# Steering Assembly

| Ref. | Part Number | Qty. | Description |
|---|---|---|---|
| 1 | 132-6740-03 | 1 | Support-Dash |
| 2 | 139-4635 | 1 | Steering Column ASM, MDX |
| 3 | 3230-1 | 4 | Bolt-CARR |
| 4 | 104-8300 | 8 | Nut-HF, NI |
| 5 | 112-3262 | 2 | Bearing |
| 6 | 21-9260 | 1 | Cover-Dust |
| 7 | 140-4560 | 1 | Steering Rack ASM |
| 7:21 | 140-4594 | 1 | Kit-Tie Rod ASM, MDX |
| 7:22 | 140-4592 | 1 | Kit-Rod End ASM |
| 7:22:2 | 3272-42 | 1 | Pin-Cotter |
| 7:22:3 | 140-2493 | 1 | Nut-Hex, Slotted |

| Ref. | Part Number | Qty. | Description |
|---|---|---|---|
| 8 | 132-6763 | 1 | Shaft-Steering |
| 10 | 322-6 | 4 | Screw-HH |
| 11 | 131-0957 | 1 | Wheel-Steering |
| 12 | 3256-26 | 1 | Washer-Flat |
| 13 | 99-5107 | 1 | Nut-Lock |
| 14 | 32144-70 | 4 | Screw-HWHTF |
| 15 | 131-3630 | 1 | Cap-Wheel, Steering |
| 16 | 116-3515 | 1 | Screw-HH, Special |
| 17 | 3253-4 | 1 | Washer-Lock |
| 18 | 3272-42 | 2 | Pin-Cotter |

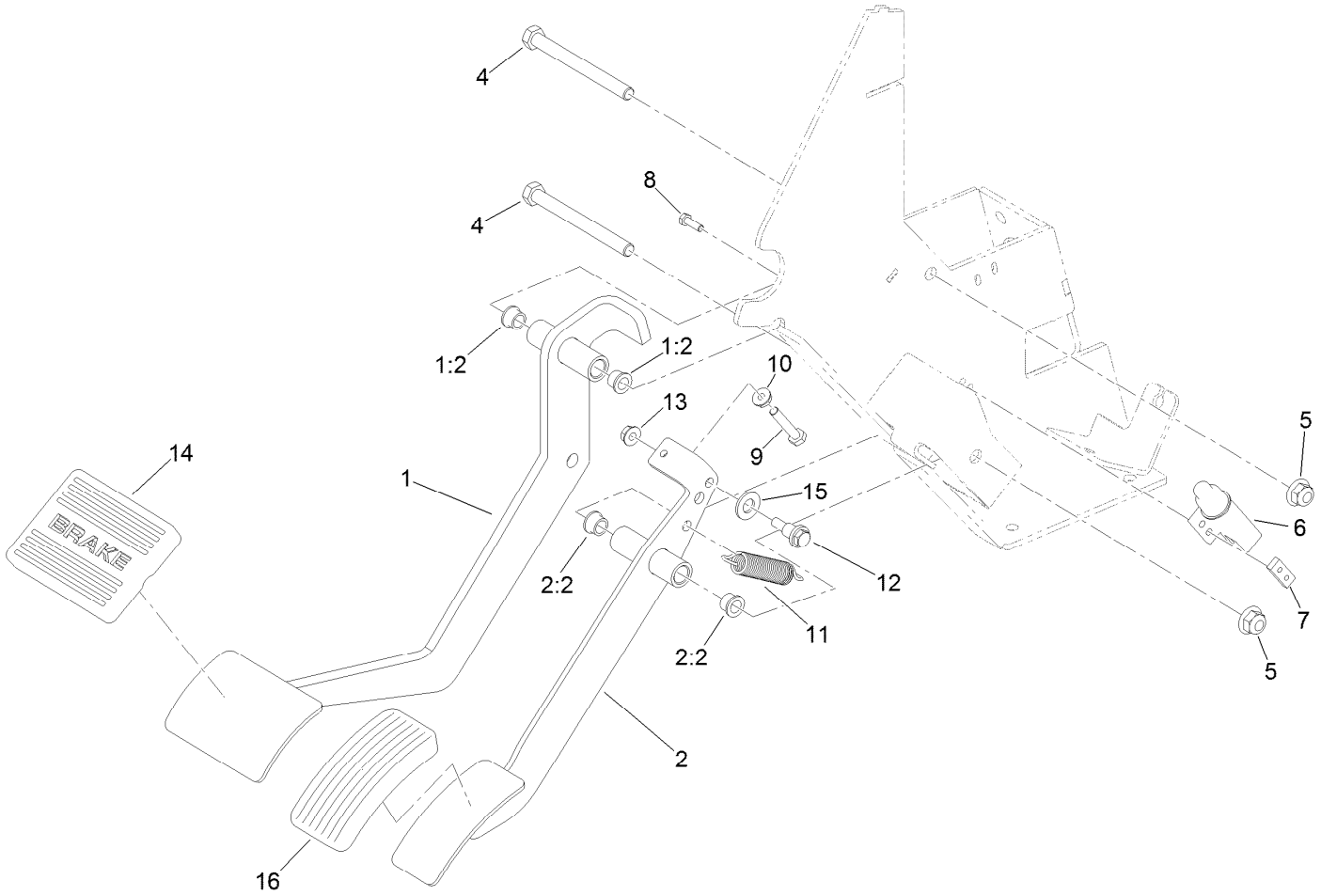


# Pedal Assembly

| Ref. | Part Number | Qty. | Description |
|---|---|---|---|
| 1 | 138-3581 | 1 | Brake Pedal ASM |
| 1:2 | 256-116 | 2 | Bushing-Flange |
| 2 | 138-3582 | 1 | Throttle Pedal ASM, MDX |
| 2:2 | 256-116 | 2 | Bushing-Flange |
| 4 | 323-16 | 2 | Screw-HH |
| 5 | 104-8301 | 2 | Nut-HF, NI |
| 6 | 99-7407 | 1 | Switch |
| 7 | 1-633181 | 1 | Plate-Tapped |
| 8 | 3290-134 | 2 | Screw |

| Ref. | Part Number | Qty. | Description |
|---|---|---|---|
| 9 | 321-13 | 1 | Screw-HH |
| 10 | 32149-2 | 1 | Nut-Keps |
| 11 | 104-6415 | 1 | Spring-Return, Pedal |
| 12 | 104-0858 | 1 | Bolt-Shoulder |
| 13 | 32128-33 | 1 | Nut-HF |
| 14 | 7-3900 | 1 | Pad-Brake |
| 15 | 3256-24 | 1 | Washer-Flat |
| 16 | 140-4572 | 1 | Pedal Pad-Throttle |

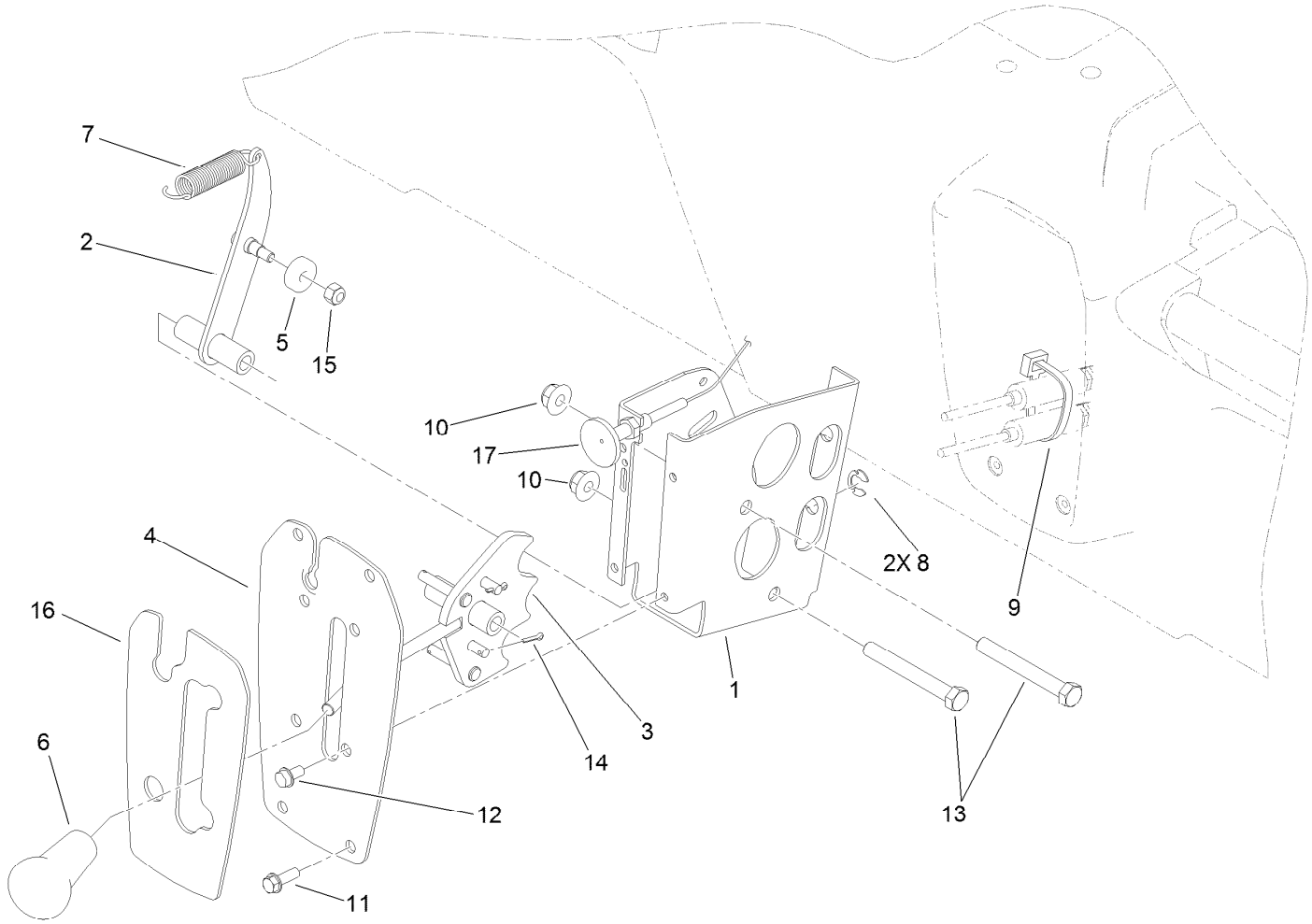


# Shifter Assembly

| Ref. | Part Number | Qty. | Description |
|---|---|---|---|
| 1 | 108-3141-0P | 1 | Bracket-Shift |
| 2 | 108-3138 | 1 | Arm-Detent |
| 3 | 114-2719 | 1 | Plate-Detent |
| 4 | 99-7887-03 | 1 | Plate-Shifter |
| 5 | 251-307 | 1 | Bearing-Ball |
| 6 | 99-7981 | 1 | Knob-Grip, Soft |
| 7 | 104-6415 | 1 | Spring-Return, Pedal |
| 8 | 32151-101 | 2 | E-Ring |
| 9 | 3290-378 | 1 | Tie-Cable |

| Ref. | Part Number | Qty. | Description |
|---|---|---|---|
| 10 | 104-8301 | 2 | Nut-HF, NI |
| 11 | 32105-15 | 4 | Screw-HWH |
| 12 | 32144-4 | 4 | Screw-HWH |
| 13 | 323-14 | 2 | Screw-HH |
| 14 | 3272-5 | 2 | Pin-Cotter |
| 15 | 3296-42 | 1 | Nut-Lock, NI |
| 16 | 99-7952 | 1 | Decal-Shifter |
| 17 | 99-7111 | 1 | Cable-Choke |

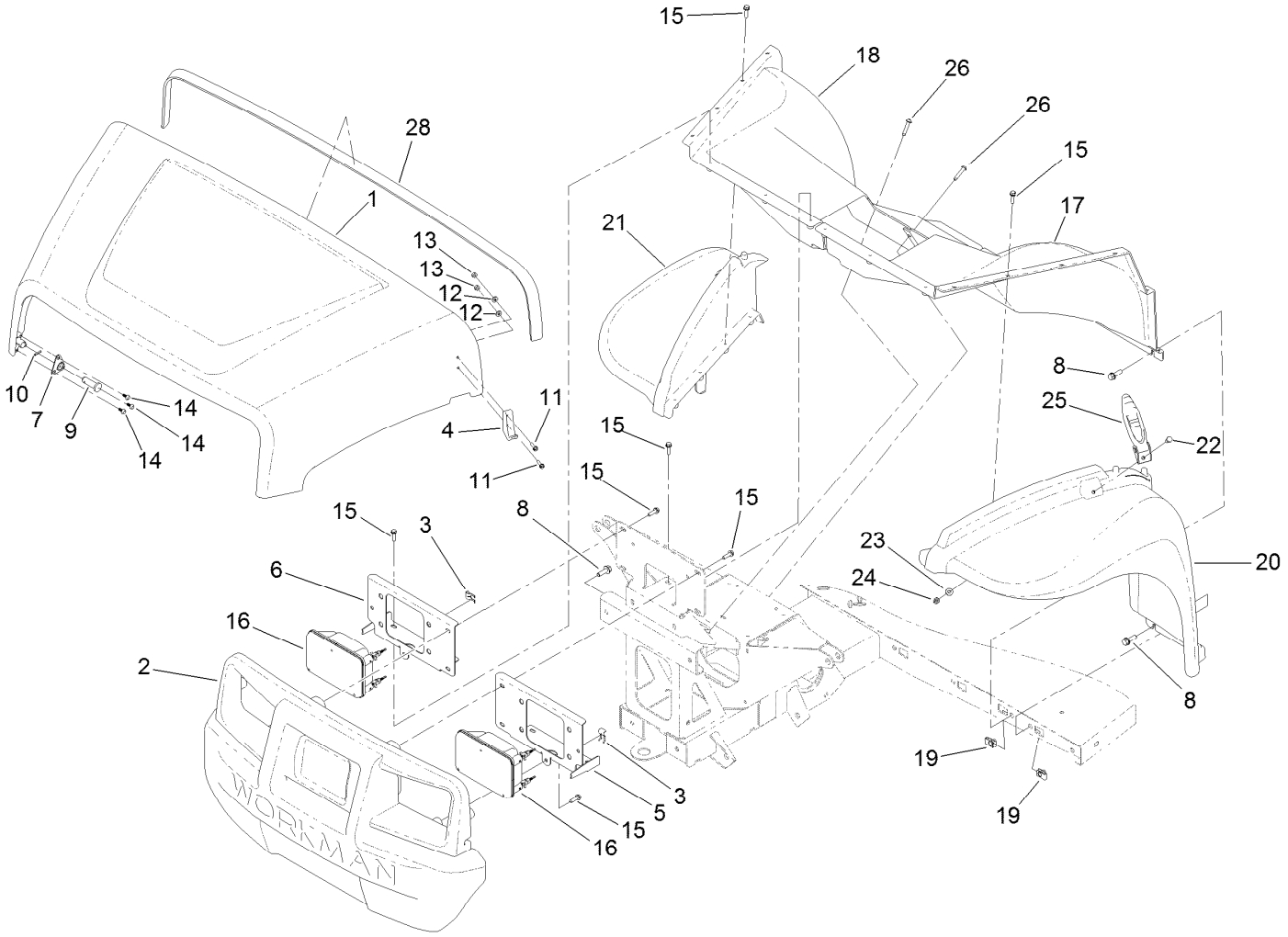


# Hood and Fender Assembly

| Ref. | Part Number | Qty. | Description |
|---|---|---|---|
| 1 | 136-6281 | 1 | Hood |
| 2 | 132-8530 | 1 | Bumper |
| 3 | 115-2408 | 6 | Clip-Speed |
| 4 | 103-2897 | 2 | Latch-Catch |
| 5 | 140-4780-0P | 1 | Bracket-Headlight, LH |
| 6 | 140-4781-0P | 1 | Bracket-Headlight, RH |
| 7 | 112-3308 | 2 | Retainer-Pin |
| 8 | 3234-29 | 12 | Screw-HHF |
| 9 | 117-5094 | 2 | Pin-Clevis |
| 10 | 32121-50 | 2 | Pin-Spring |
| 11 | 32105-13 | 4 | Screw-HWH |
| 12 | 3256-14 | 4 | Washer-Flat |
| 13 | 3296-2 | 4 | Nut-Lock, NI |
| 14 | 121-9605 | 6 | Screw-HWH |

| Ref. | Part Number | Qty. | Description |
|---|---|---|---|
| 15 | 46-8091 | 24 | Screw-HWH |
| 16 | 138-9260 | 2 | Headlight ASM |
| 17 | 132-6775 | 1 | Fender-Inner, LH |
| 18 | 132-6776 | 1 | Fender-Inner, RH |
| 19 | 112-3306 | 10 | Nut |
| 20 | 112-3371 | 1 | Fender-LH |
| 21 | 112-3370 | 1 | Fender-RH |
| 22 | 321-39 | 2 | Screw-HH |
| 23 | 3256-22 | 2 | Washer-Flat |
| 24 | 3296-42 | 2 | Nut-Lock, NI |
| 25 | 115-2416 | 2 | Latch-Rubber |
| 26 | 132-6777 | 4 | Screw-TTH |
| 28 | 115-7635 | 1 | Seal-Foam |

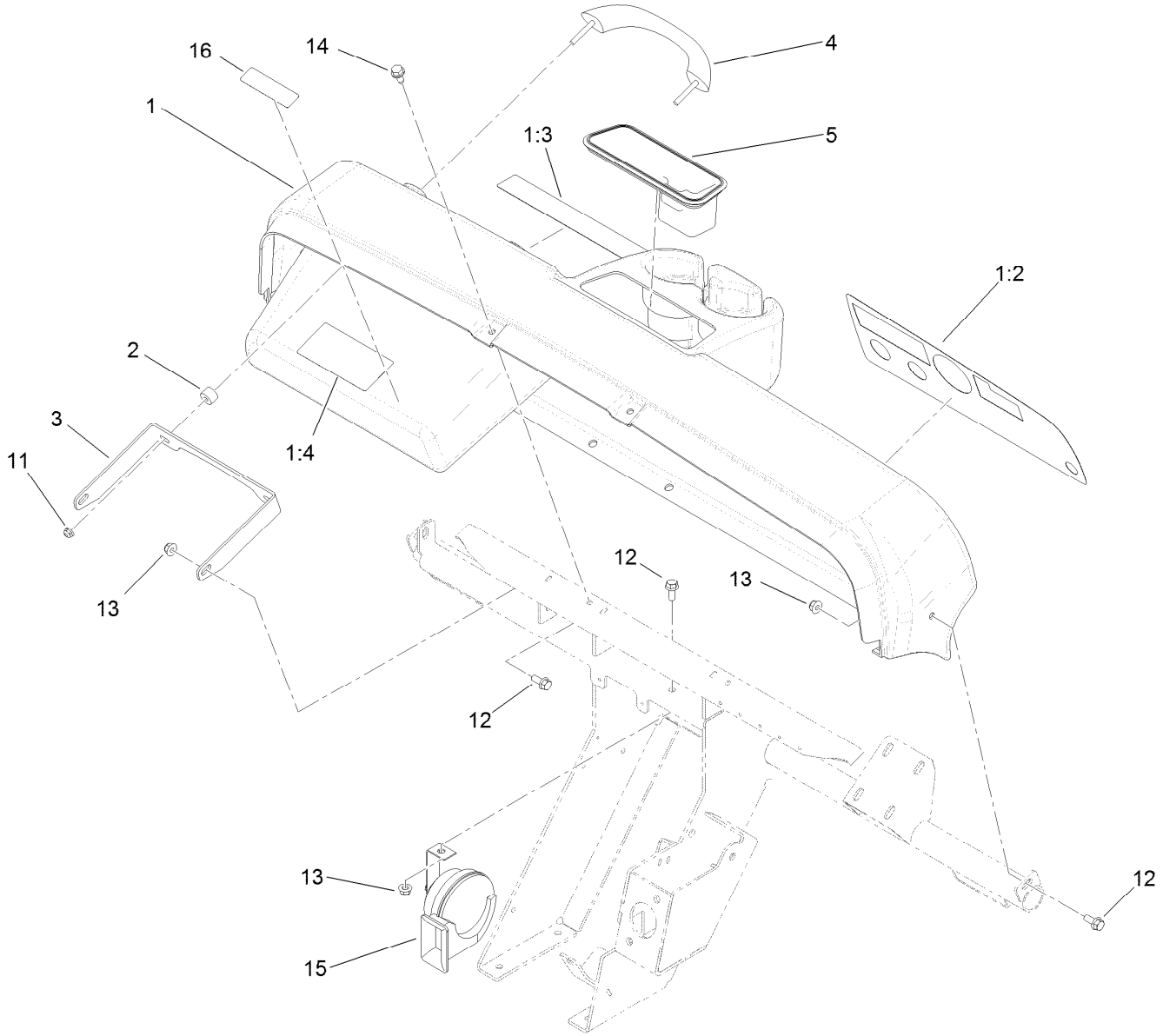


# Dash Assembly

| Ref. | Part Number | Qty. | Description |
|---|---|---|---|
| 1 | 114-8310 | 1 | Dash ASM |
| 1:2 | 138-3521 | 1 | Decal-Panel, Control |
| 1:3 | 121-9775 | 1 | Decal-Danger |
| 1:4 | 115-2412 | 1 | Decal-No Storage |
| 2 | 114-8301 | 2 | Spacer |
| 3 | 112-3391-0P | 1 | Bracket-Grip Handle |
| 4 | 112-3320 | 1 | Handle-Grip |
| 5 | 104-6930 | 1 | Plug-Rubber |
| 11 | 104-7201 | 2 | Nut-HF, NI |
| 12 | 110-5053 | 4 | Screw-HHF |
| 13 | 104-8300 | 4 | Nut-HF, NI |
| 14 | 32144-70 | 6 | Screw-HWHTF |
| 15 | 110-2594 | 1 | Horn |
| 16 | 136-6313 | 1 | Decal-Block, Fuse |

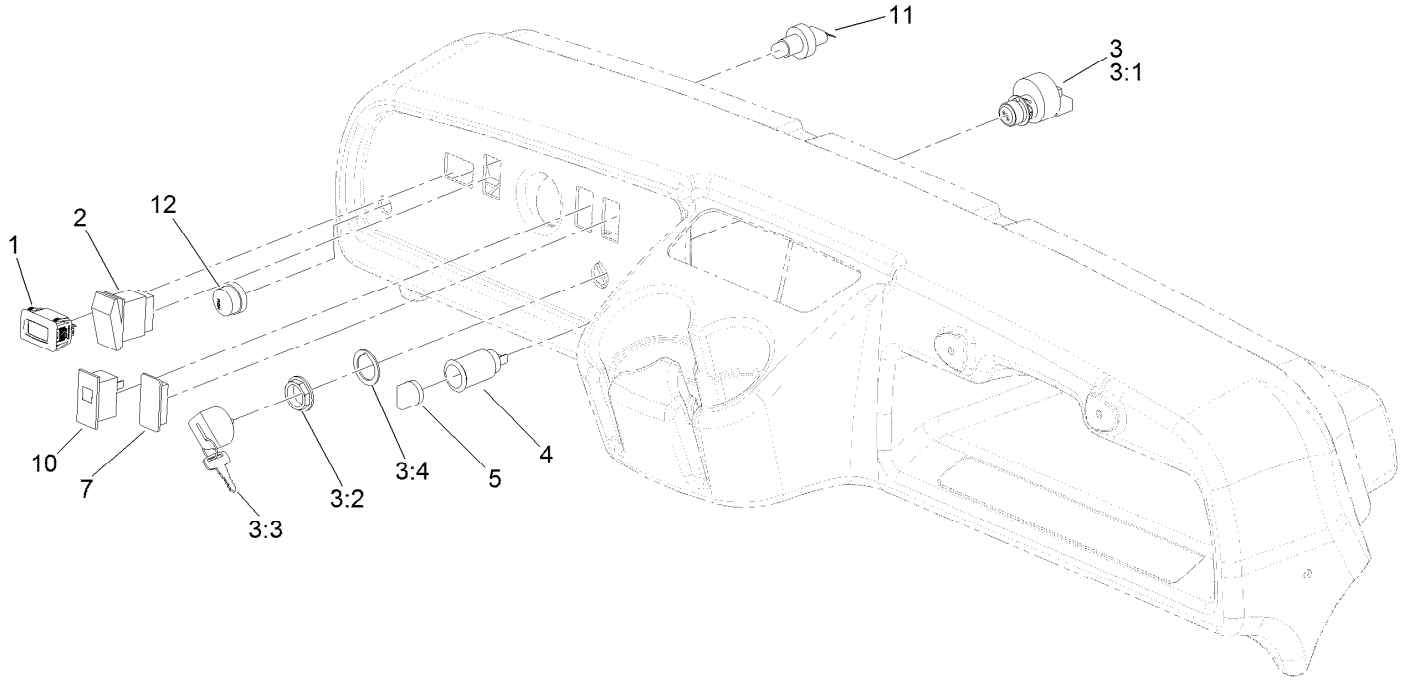


# Control Panel Assembly

| Ref. | Part Number | Qty. | Description |
|---|---|---|---|
| 1 | 120-2244 | 1 | Hourmeter |
| 2 | 95-8999 | 1 | Switch |
| 3 | 122-1145 | 1 | Ignition Switch ASM |
| 3:1 | | 1 | Switch-Ignition ● |
| 3:2 | 108-8660 | 1 | Nut-Mounting |
| 3:3 | 106-5270 | 1 | Ignition Key Set |
| 3:4 | 108-8659 | 1 | Washer-Backup |
| 4 | 99-7411 | 1 | Point-Power |
| 5 | 99-7416 | 1 | Cap |
| 7 | 99-7420 | 1 | Plug-Hole |
| 10 | 99-7410 | 1 | Indicator-Light, Low-Oil Pressure |
| 11 | 112-3324 | 1 | Switch-Horn |
| 12 | 112-3313 | 1 | Nut-Weatherproof |

● Not serviced separately

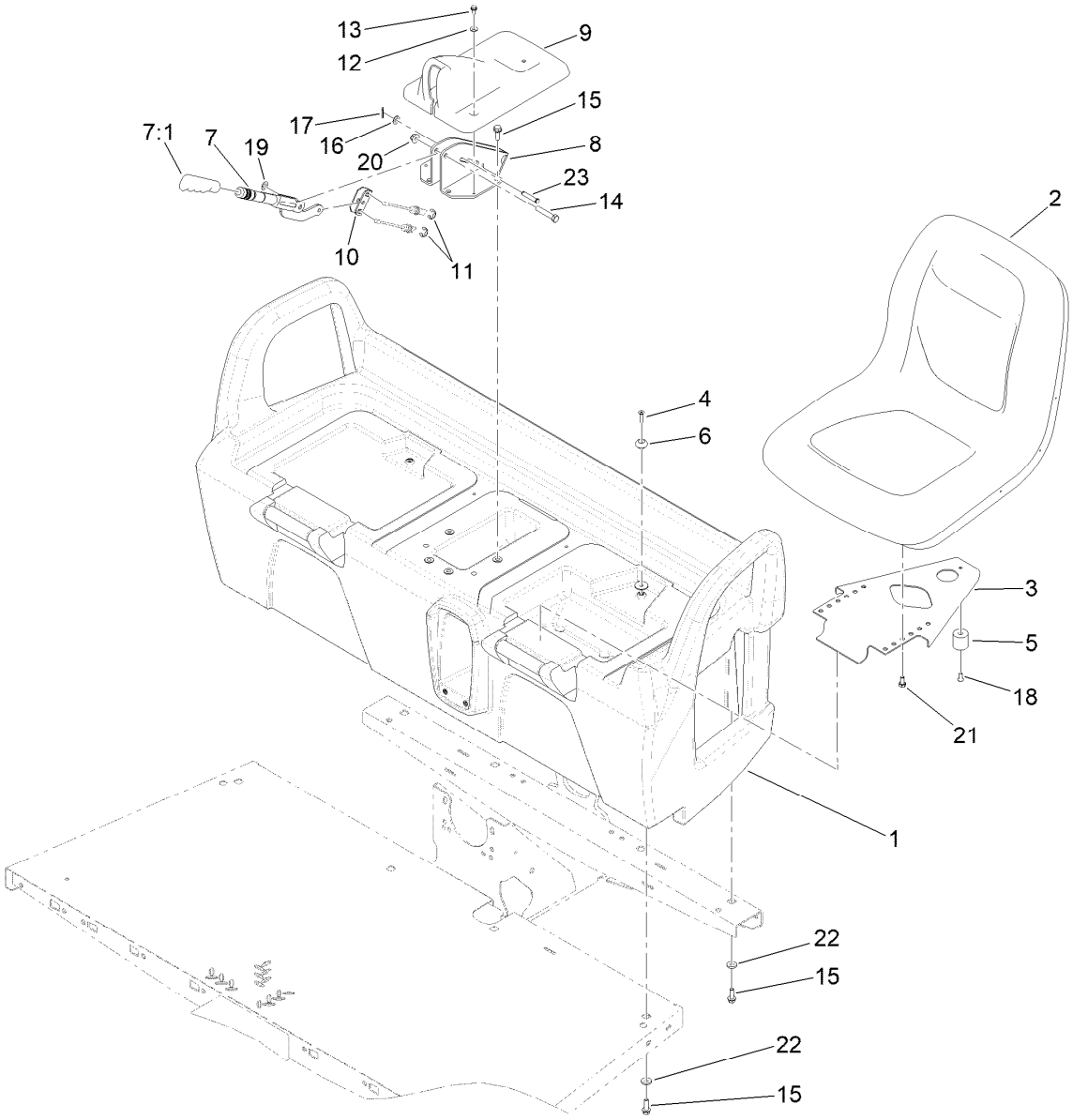


# Seatbase Assembly

| Ref. | Part Number | Qty. | Description |
|---|---|---|---|
| 1 | 104-6847 | 1 | Base-Seat |
| 2 | 133-0577 | 2 | Seat ASM |
| 3 | 99-7829 | 2 | Bracket-Seat |
| 4 | 32108-5 | 2 | Screw-FH |
| 5 | 99-7830 | 2 | Receptical-Rubber |
| 6 | 99-7833 | 2 | Post-Holding |
| 7 | 127-8863 | 1 | Lever-Brake, Park |
| 7:1 | 127-8864 | 1 | Grip-Handle |
| 8 | 104-6844-0P | 1 | Support-Park Brake, Wa |
| 9 | 104-7014 | 1 | Cover-Brake, Parking |
| 10 | 87-3480 | 1 | Bracket-Equalizer, Cable |
| 11 | 32120-47 | 2 | Ring-Retaining, External |

| Ref. | Part Number | Qty. | Description |
|---|---|---|---|
| 12 | 3256-1 | 4 | Washer-Flat |
| 13 | 32144-4 | 2 | Screw-HWH |
| 14 | 323-10 | 1 | Screw-HH |
| 15 | 3234-17 | 12 | Screw-HHF |
| 16 | 3256-23 | 1 | Washer-Plain |
| 17 | 3272-6 | 1 | Pin-Cotter |
| 18 | 3290-412 | 2 | Rivet-Blind |
| 19 | 3290-477 | 1 | Washer-Curved |
| 20 | 104-8301 | 1 | Nut-HF, NI |
| 21 | 33114-016 | 8 | Screw-HH |
| 22 | 88-7200 | 8 | Washer-Flat |
| 23 | 94-3829 | 1 | Pin-Clevis |

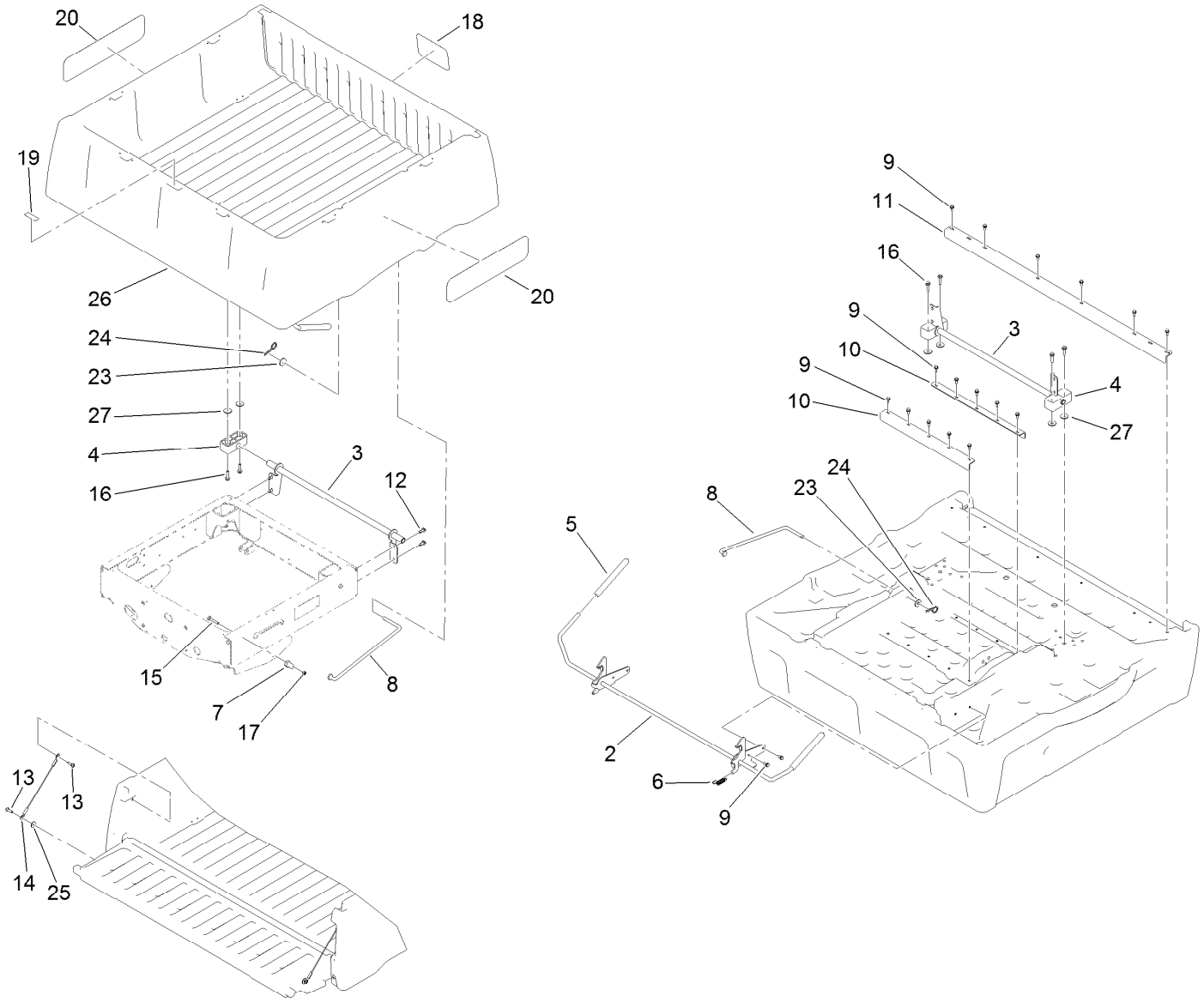


# Cargo Bed Assembly

| Ref. | Part Number | Qty. | Description |
|---|---|---|---|
| 2 | 121-6344 | 1 | Latch |
| 3 | 133-0625-03 | 1 | Bracket-Pivot |
| 4 | 121-6342 | 2 | Bushing-Pivot |
| 5 | 119-9627 | 2 | Grip-Handle |
| 6 | 5-7290 | 2 | Spring-Tension |
| 7 | 144-2191 | 2 | Pin-Latch |
| 8 | 121-6316 | 1 | Rod-Prop |
| 9 | 3234-5 | 20 | Screw-HHF |
| 10 | 121-6314-0P | 2 | Brace-Middle, Bed |
| 11 | 121-6315-0P | 1 | Brace-Rear, Bed |
| 12 | 126-1696 | 4 | Screw-HWHTF |
| 13 | 119-2267 | 4 | Screw-Shoulder, BHTF |

| Ref. | Part Number | Qty. | Description |
|---|---|---|---|
| 14 | 121-6343 | 2 | Lanyard-Tailgate |
| 15 | 3230-7 | 2 | Bolt-CARR |
| 16 | 3234-18 | 4 | Screw-HHF |
| 17 | 104-8300 | 2 | Nut-HF, NI |
| 18 | 104-7213 | 1 | Decal |
| 19 | 115-7739 | 1 | Decal-No Riders |
| 20 | 119-9450 | 2 | Decal |
| 23 | 110-6147 | 1 | Washer-Flat |
| 24 | 107-3155 | 1 | Hairpin |
| 25 | 115-7109 | 2 | Washer-Flat |
| 26 | 133-0560 | 1 | Cargo Bed/Tailgate ASM |
| 27 | 87-5330 | 4 | Washer |

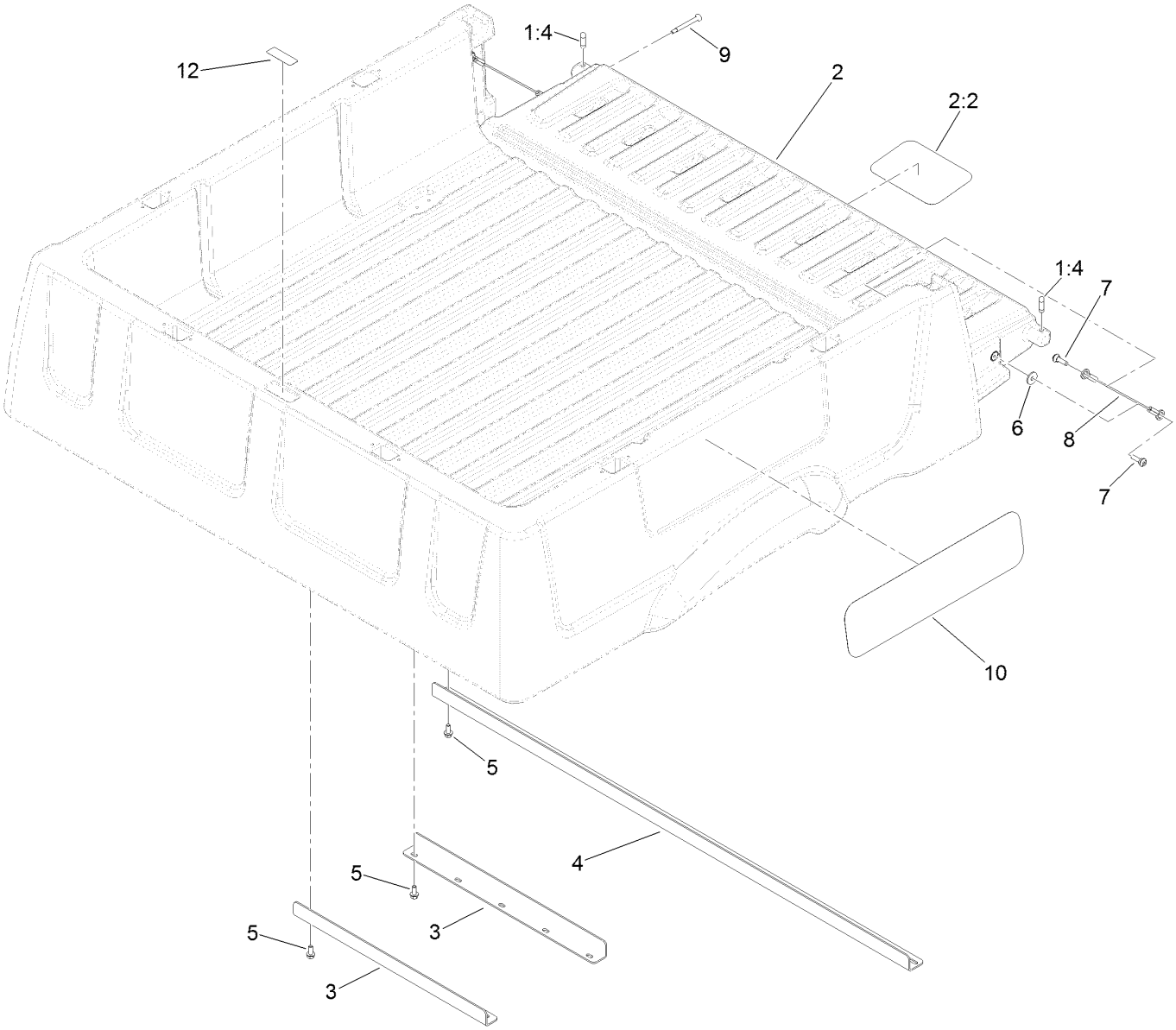


# Cargo Bed and Tailgate Service Assembly No. 133-0560

| Ref. | Part Number | Qty. | Description |
|---|---|---|---|
| 1 | | 1 | Cargo Bed/Tailgate ASM ●■ |
| 1:4 | 133-7146 | 2 | Plug-Tailgate, Anti-Rattle |
| 2 | 133-0561 | 1 | Tailgate ASM W/Decals |
| 2:2 | 104-7213 | 1 | Decal |
| 3 | 121-6314-0P | 2 | Brace-Middle, Bed |
| 4 | 121-6315-0P | 1 | Brace-Rear, Bed |
| 5 | 3234-5 | 16 | Screw-HHF |
| 6 | 115-7109 | 2 | Washer-Flat |
| 7 | 119-2267 | 4 | Screw-Shoulder, BHTF |
| 8 | 121-6343 | 2 | Lanyard-Tailgate |
| 9 | 127-7383 | 2 | Screw-Shoulder, Bh (Torx) |
| 10 | 120-4825 | 2 | Decal |
| 12 | 115-7739 | 1 | Decal-No Riders |

● Not illustrated

■ Not serviced separately

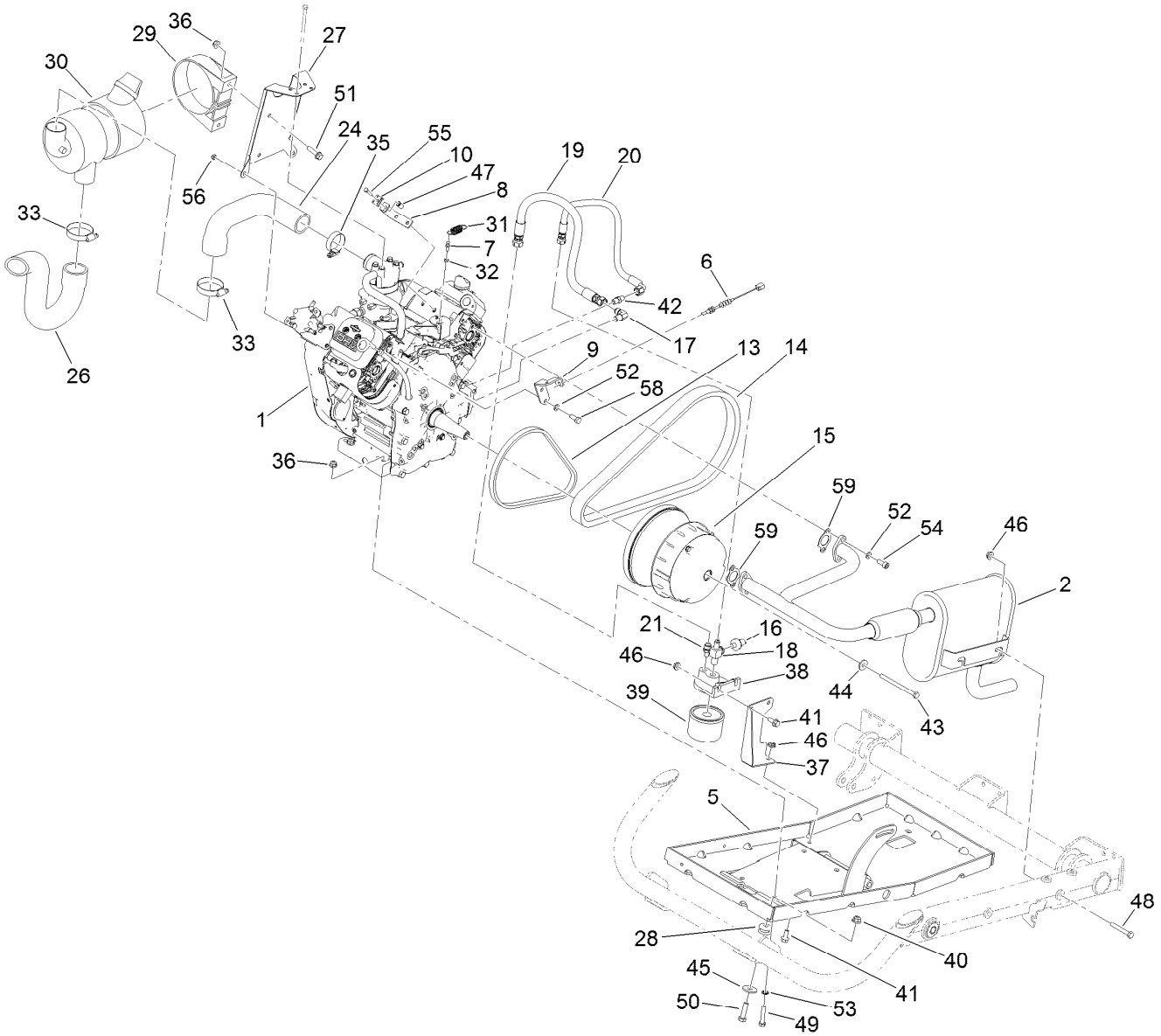


# Engine, Clutch and Air Cleaner Assembly

| Ref. | Part Number | Qty. | Description |
|---|---|---|---|
| 1 | 140-2599 | 1 | Engine-Briggs And Stratton ● |
| 2 | 139-3399 | 1 | MDX Exhaust ASM |
| 5 | 119-0709-03 | 1 | Tray-Engine |
| 6 | 115-7612 | 1 | Cable-Accelerator |
| 7 | 99-7847 | 1 | Ball-Stud |
| 8 | 107-0319 | 1 | Bracket-Cable |
| 9 | 115-2393 | 1 | Bracket-Cable |
| 10 | 81-1690 | 1 | Clamp-Cable |
| 13 | 121-9778 | 1 | Belt-V |
| 14 | 136-6296 | 1 | Belt-Variable |
| 15 | 138-0094 | 1 | Clutch-Primary |
| 16 | 115-2316 | 1 | Switch-Pressure F/W |
| 17 | 115-2317 | 1 | Fitting-Elbow |
| 18 | 119-0826 | 1 | Fitting-Tee |
| 19 | 119-0831 | 1 | Hose-HYD |
| 20 | 119-0832 | 1 | Hose-HYD |
| 21 | 119-0833 | 1 | Fitting-Straight |

| Ref. | Part Number | Qty. | Description |
|---|---|---|---|
| 24 | 131-6696 | 1 | Hose-Air Intake |
| 26 | 115-7623 | 1 | Hose-Intake |
| 27 | 132-6796-0P | 1 | Bracket-Air Cleaner |
| 28 | 63-9750 | 2 | Mount |
| 29 | 95-5806 | 1 | Bracket-Mounting, Air Cleaner |
| 30 | 99-7120 | 1 | Air Cleaner ASM |
| 31 | 71-5470 | 1 | Spring-Brake |
| 32 | 110-2619 | 1 | Keeper-Spring |
| 33 | 2412-130 | 2 | Clamp-Hose |
| 35 | 2412-3 | 1 | Clamp-Hose |
| 36 | 104-8300 | 6 | Nut-HF, NI |
| 37 | 112-3240-0P | 1 | Brkt-Oil Filter |
| 38 | 115-2314 | 1 | Adapter-Filter, Oil |
| 39 | 107-7817 | 1 | Filter-Oil, Engine |
| 40 | 104-8301 | 2 | Nut-HF, NI |
| 41 | 110-5053 | 4 | Screw-HHF |
| 42 | 112-3282 | 1 | Fitting-Straight |

● Obtain parts from www.briggsandstratton.com

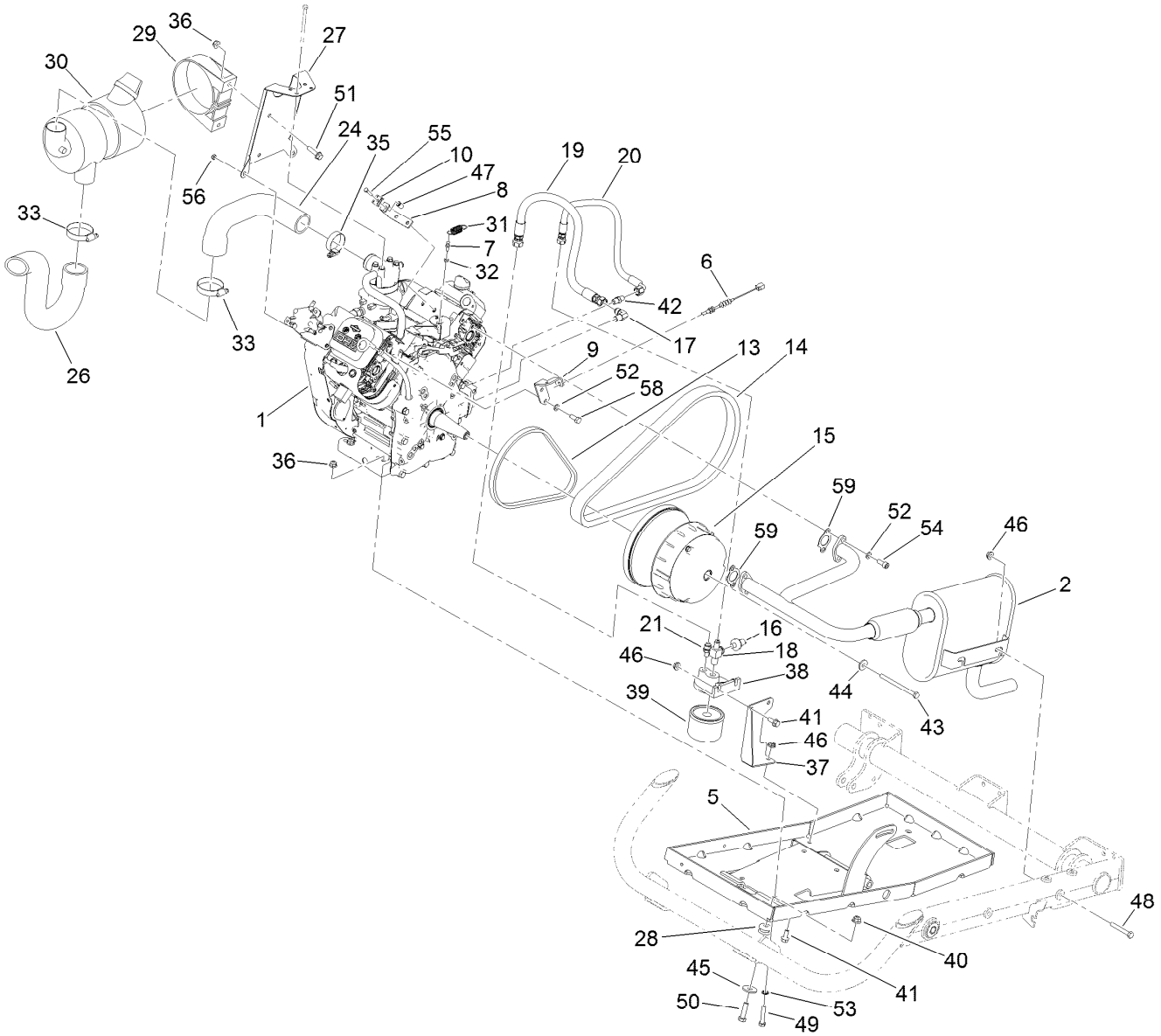


# Engine, Clutch and Air Cleaner Assembly (continued)

| Ref. | Part Number | Qty. | Description |
|---|---|---|---|
| 43 | 119-0722 | 1 | Screw-HH |
| 44 | 119-0724 | 1 | Washer-Flange |
| 45 | 2844 | 2 | Washer |
| 46 | 32128-20 | 6 | Nut-HF |
| 47 | 32148-14 | 1 | Nut-Clinch |
| 48 | 139-4479 | 2 | Screw-HHF |
| 49 | 322-9 | 4 | Screw-HH |
| 50 | 323-8 | 2 | Screw-HH |

| Ref. | Part Number | Qty. | Description |
|---|---|---|---|
| 51 | 3234-36 | 2 | Screw-HHF |
| 52 | 3253-4 | 6 | Washer-Lock |
| 53 | 3254-2 | 2 | Washer-Lock, Internal |
| 54 | 108-6343 | 4 | Screw-HSH,Lock |
| 55 | 3290-432 | 1 | Screw-HH |
| 56 | 33023-00 | 2 | Nut-Lock |
| 58 | 66-3160 | 2 | Screw-Cap |
| 59 | 94-5844 | 2 | Gasket |

● Obtain parts from www.briggsandstratton.com

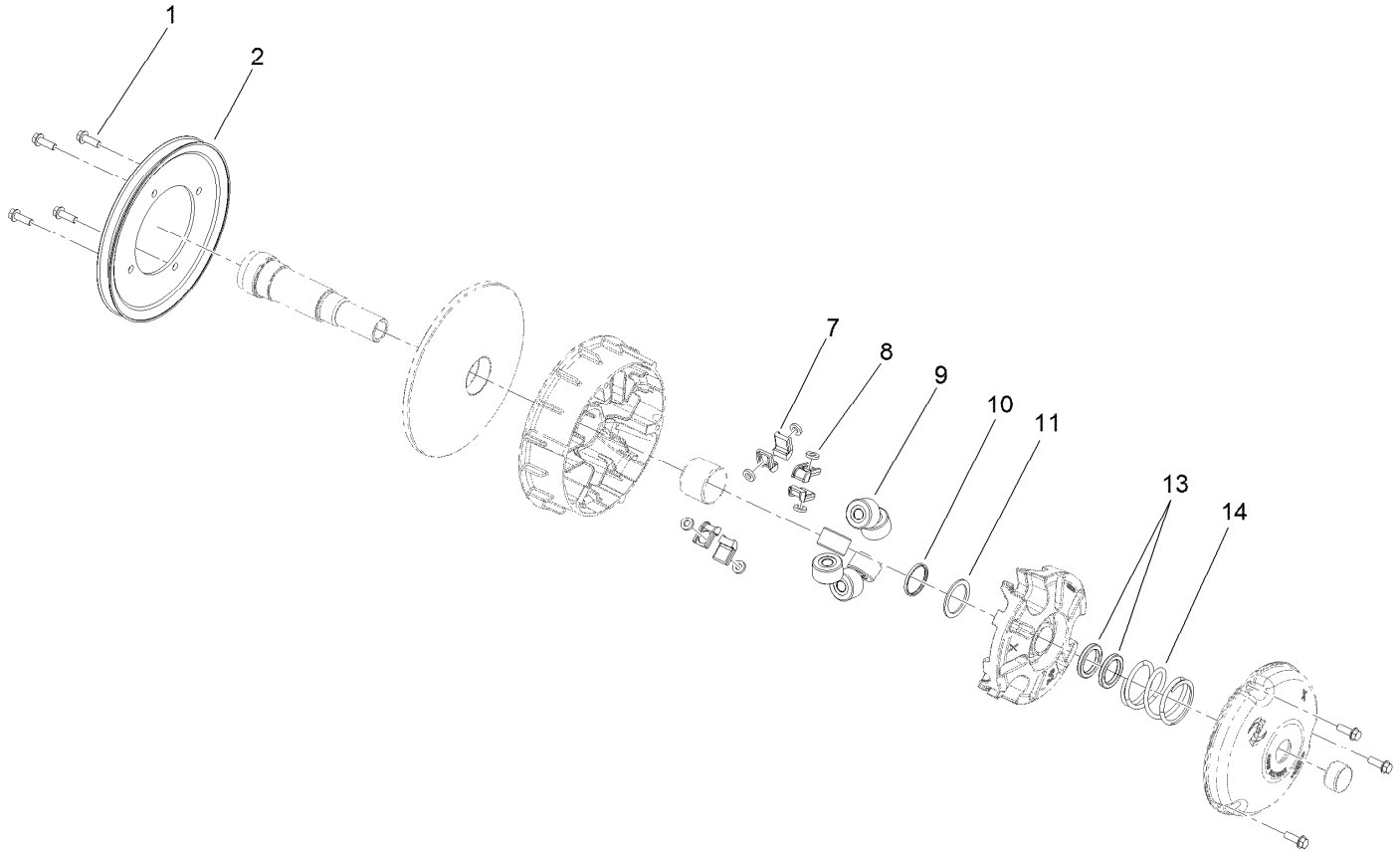


# Primary Clutch Assembly No. 138-0094

| *Ref.* | *Part Number* | *Qty.* | *Description* |
|---|---|---|---|
| 1 | 49-2040 | 7 | Screw-HWHTF |
| 2 | 119-0813 | 1 | Pulley-Primary |
| 7 | 127-8689 | 6 | Button-Primary, Torque |
| 8 | 127-8690 | 6 | Plug-Button, Torque |
| 9 | 119-0804 | 6 | Weight-Roller |
| 10 | 119-0815 | 1 | Shim-Spider |
| 11 | 119-0812 | 1 | Shim-Spider |
| 13 | 119-0807 | 2 | Shim-Limiter |
| 14 | 119-9532 | 1 | Spring-Red/White |

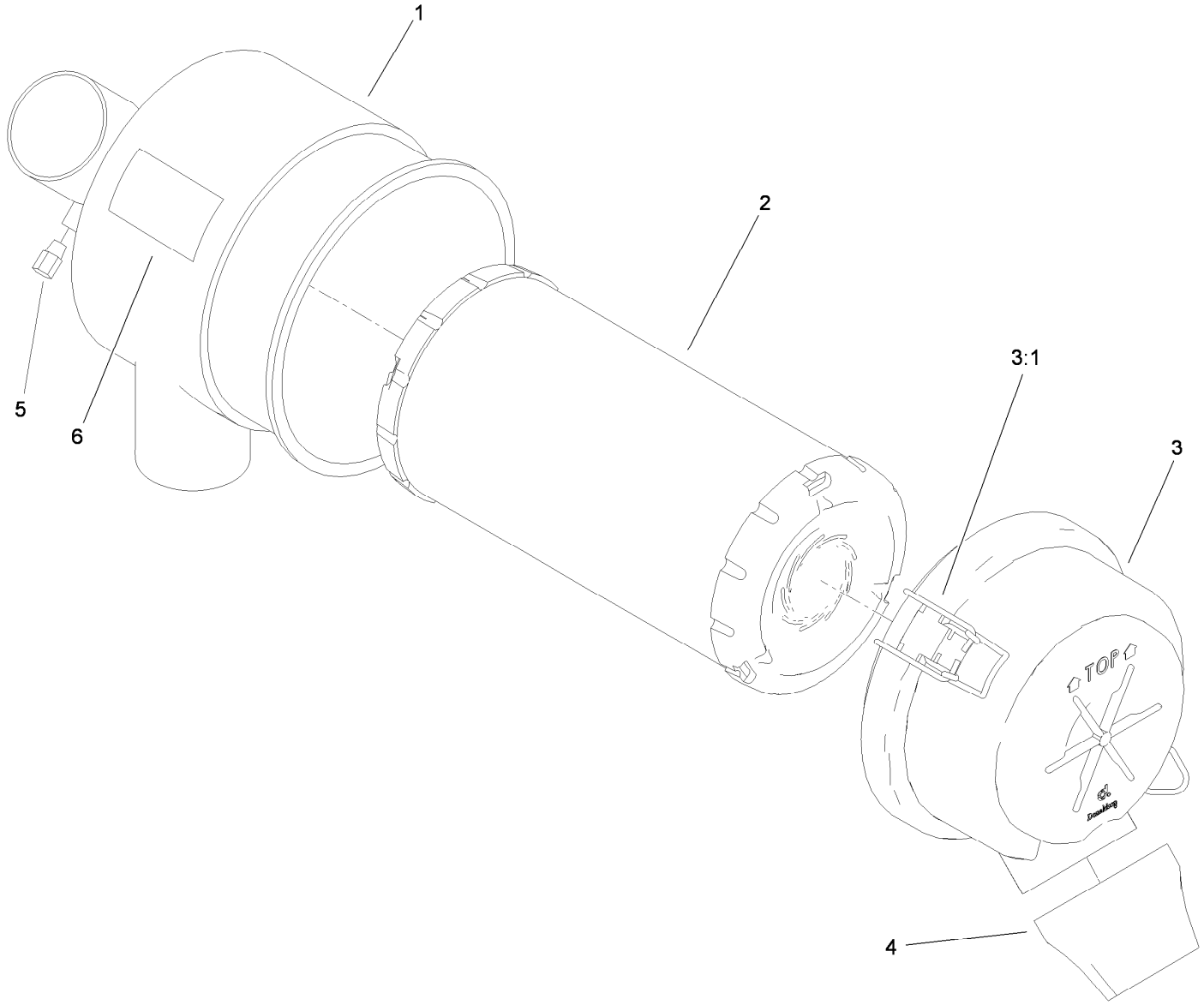


# Air Cleaner Assembly No. 99-7120

| *Ref.* | *Part Number* | *Qty.* | *Description* |
|---|---|---|---|
| 1 | | 1 | Body ● |
| 2 | 108-3811 | 1 | Filter-Air |
| 3 | 94-3652 | 1 | Cover ASM |
| 3:1 | 1-643283 | 2 | Latch-Cleaner, Air |
| 4 | 87-9400 | 1 | Valve-Vacuator |
| 5 | | 1 | Plug ● |
| 6 | | 1 | Marking ● |

● Not serviced separately

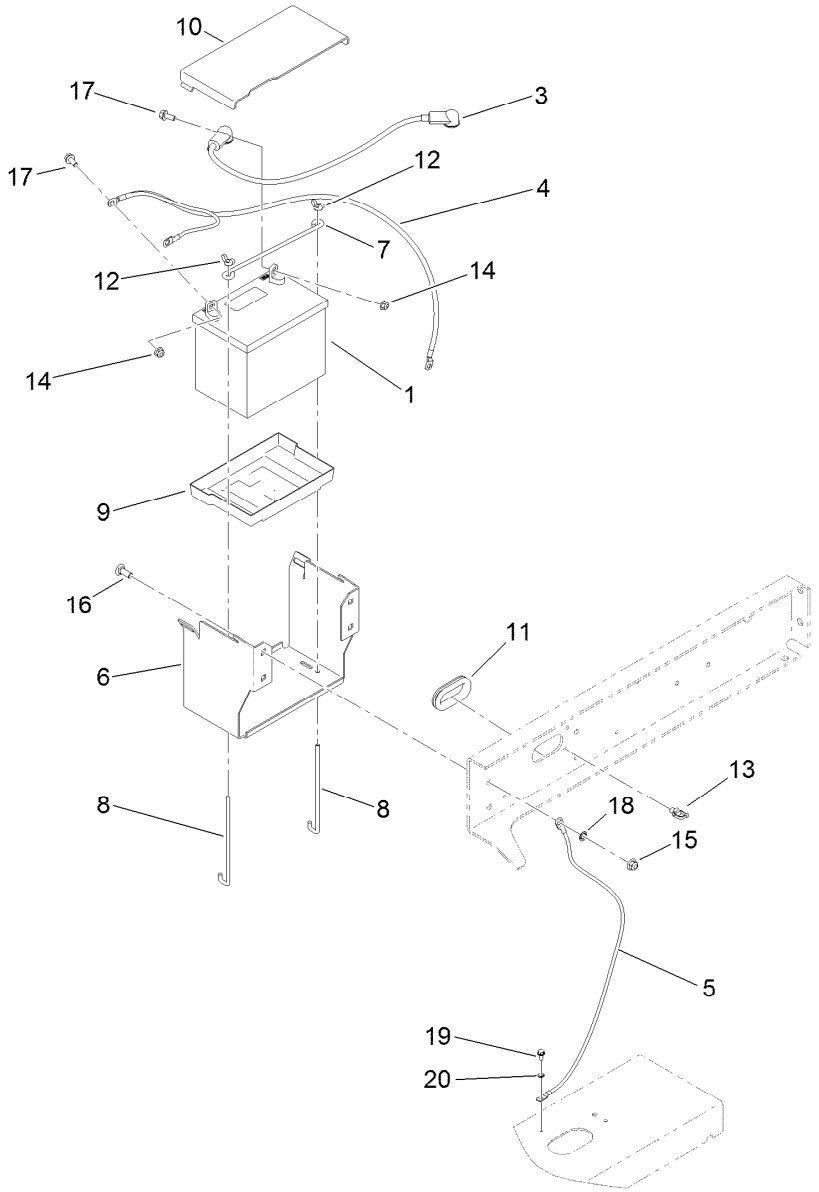


# Battery Assembly

| Ref. | Part Number | Qty. | Description |
|---|---|---|---|
| 1 | 104-8162 | 1 | Battery |
| 3 | 114-9404 | 1 | Cable-Battery, Positive |
| 4 | 115-8107 | 1 | Cable-Battery, Negative |
| 5 | 115-8108 | 1 | Cable-Battery, Negative |
| 6 | 115-2302-03 | 1 | Base-Battery |
| 7 | 100-6434 | 1 | Rod-Hold Down, Battery |
| 8 | 100-6435 | 2 | Post-Battery |
| 9 | 106948 | 1 | Tray-Battery |
| 10 | 115-2394 | 1 | Cover-Battery |
| 11 | 240-12 | 1 | Grommet-Rubber |

| Ref. | Part Number | Qty. | Description |
|---|---|---|---|
| 12 | 32103-22 | 2 | Nut-Wing |
| 13 | 32180-030 | 2 | Clip-Tie |
| 14 | 104-8300 | 2 | Nut-HF, NI |
| 15 | 104-8301 | 4 | Nut-HF, NI |
| 16 | 3231-22 | 4 | Screw-CARR |
| 17 | 3234-5 | 2 | Screw-HHF |
| 18 | 3254-6 | 1 | Washer-Lock, Internal |
| 19 | 32144-4 | 1 | Screw-HWH |
| 20 | 3254-16 | 1 | Washer-Lock/Int |

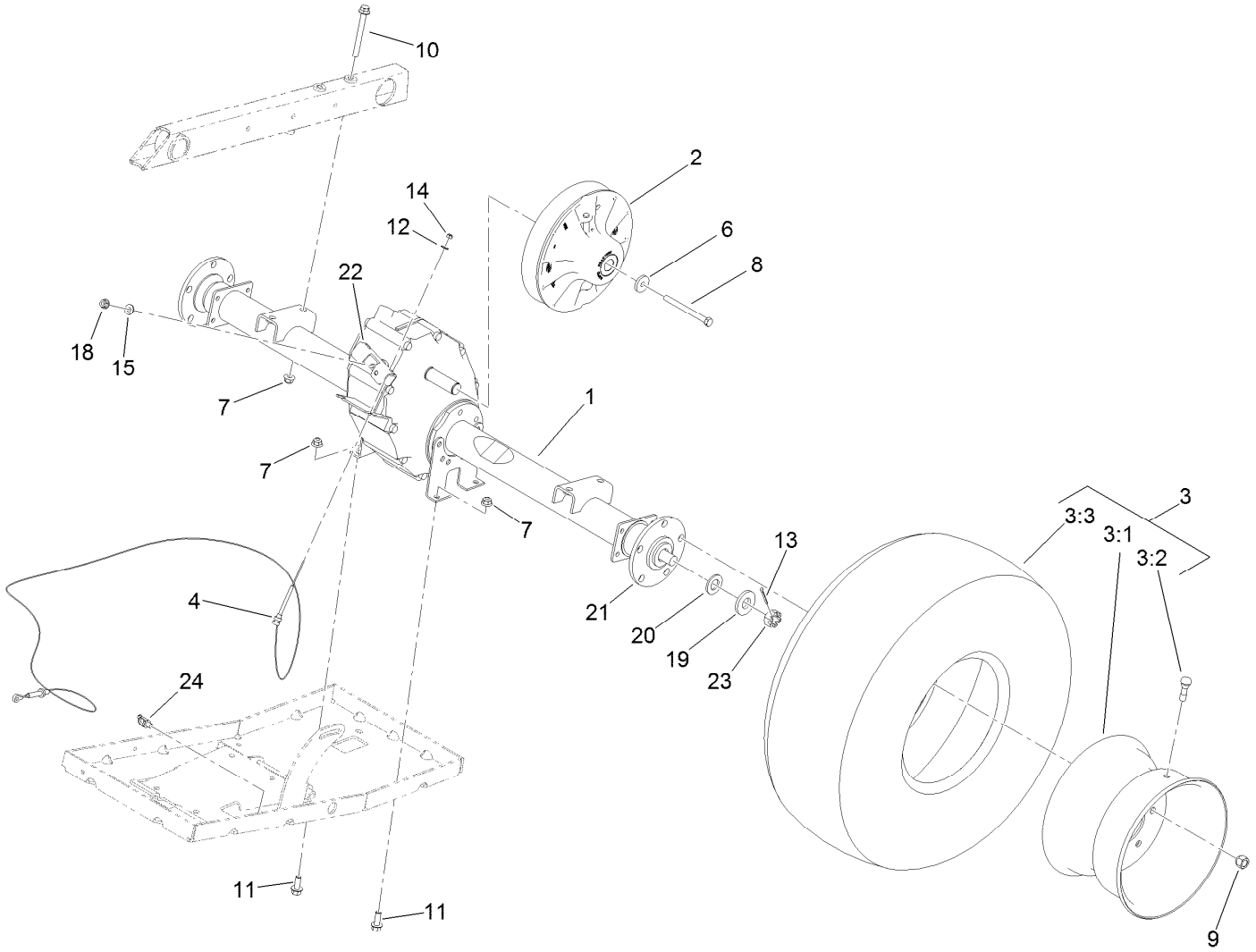


# Rear Axle Drive System Assembly

| Ref. | Part Number | Qty. | Description |
|---|---|---|---|
| 1 | 119-0760 | 1 | Transaxle ASM |
| 2 | 136-6289 | 1 | Clutch-Secondary |
| 3 | 131-8434 | 2 | Tire And Wheel ASM |
| 3:1 | 131-8435 | 1 | Wheel |
| 3:2 | 232-27 | 1 | Stem-Valve |
| 3:3 | 131-6667 | 1 | Tire (24 X 12.00-10) 4P K506 |
| 4 | 115-7679 | 2 | Cable-Control, Tension |
| 6 | 104-6563 | 1 | Washer-Stepped |
| 7 | 104-8301 | 8 | Nut-HF, NI |
| 8 | 119-0723 | 1 | Screw-HH, Lock |
| 9 | 242-50 | 10 | Nut-Lug |
| 10 | 116-4701 | 4 | Screw-HHF |
| 11 | 3234-11 | 4 | Screw-HHF |
| 12 | 3256-49 | 2 | Washer-Plain |
| 13 | 3272-12 | 2 | Pin-Cotter |
| 14 | 3296-2 | 2 | Nut-Lock, NI |
| 15 | 87-8640 | 1 | Washer-Flat |
| 18 | 104-1672 | 1 | Nut-Lock |
| 19 | 133-0632 | 2 | Spacer |
| 20 | 104-1674 | 2 | Washer |
| 21 | 104-1675 | 2 | Hub |
| 22 | 104-6860 | 1 | Lever-Select |
| 23 | 104-1656 | 2 | Nut-Castle |
| 24 | 32180-030 | 1 | Clip-Tie |

# Transaxle Assembly No. 119-0760

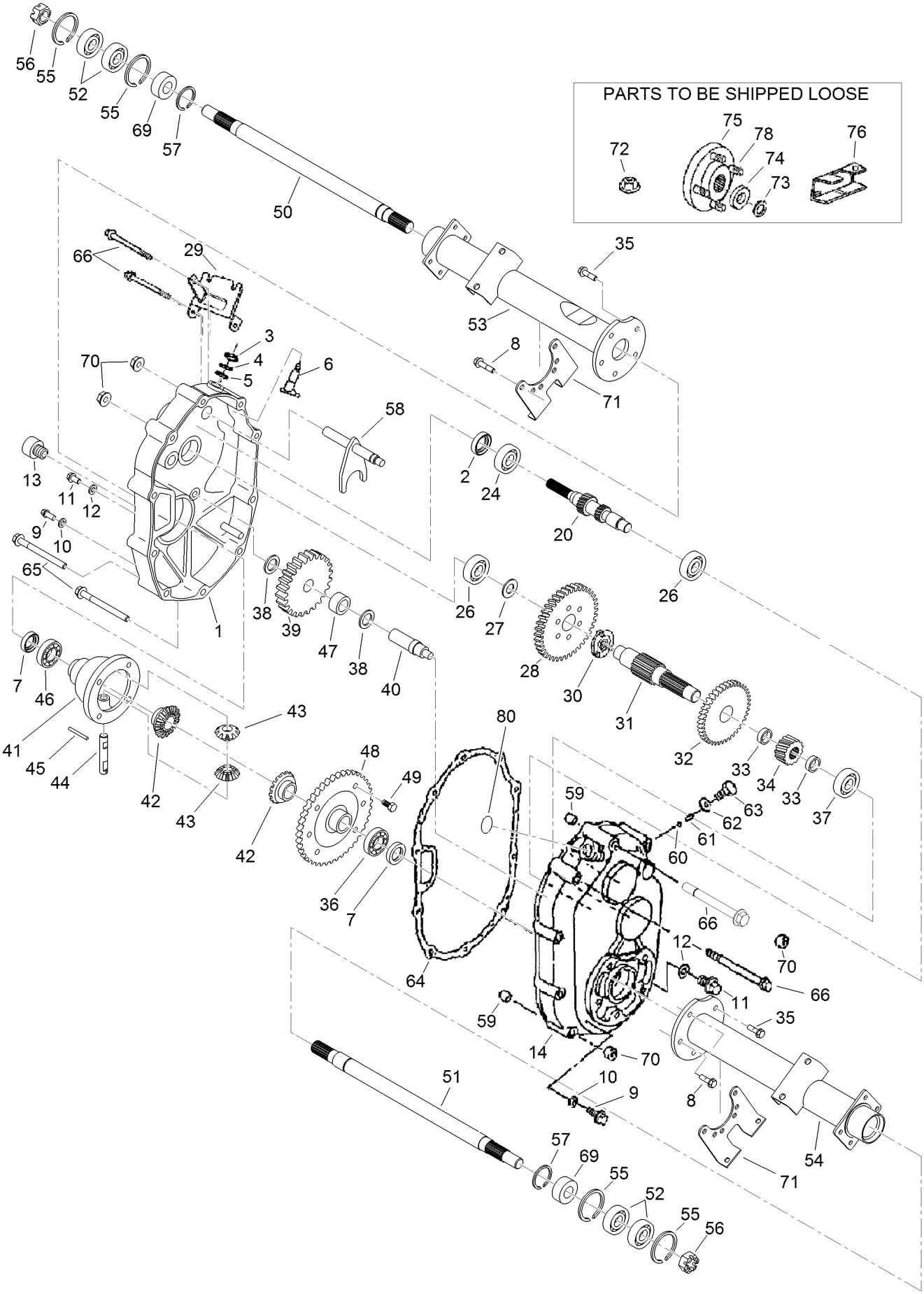

# Transaxle Assembly No. 119-0760 (continued)

| Ref. | Part Number | Qty. | Description |
|---|---|---|---|
| 1 | 104-1601 | 1 | Case-LH, Complete |
| 2 | 104-1602 | 1 | Seal-Oil |
| 3 | 104-1603 | 1 | Seal-Oil |
| 4 | 104-1604 | 1 | Ring-Snap |
| 5 | 104-1605 | 1 | Spacer |
| 6 | 104-1606 | 1 | Shaft-Selector |
| 7 | 104-1607 | 2 | Seal-Oil |
| 8 | 104-1608 | 4 | Bolt-Flange |
| 9 | 104-1609 | 2 | Plug-Check, Oil |
| 10 | 104-1610 | 2 | Gasket |
| 11 | 104-1611 | 2 | Plug-Drain, Oil |
| 12 | 104-1612 | 2 | Gasket |
| 13 | 104-1613 | 1 | Plug-Filler, Oil |
| 14 | 104-1614 | 1 | Case-Complete, RH |
| 20 | 104-7002 | 1 | Shaft-Input, Complete |
| 24 | 104-1624 | 1 | Bearing-Ball |
| 26 | 104-1626 | 2 | Bearing-Ball |
| 27 | 104-1627 | 1 | Spacer |
| 28 | 104-1628 | 1 | Gear |
| 29 | 104-1629 | 1 | Bracket-Wire, Change |
| 30 | 104-1630 | 1 | Clutch-Pin |
| 31 | 104-1631 | 1 | Shaft-Center |
| 32 | 104-1632 | 1 | Gear |
| 33 | 104-1633 | 2 | Collar |
| 34 | 104-1634 | 1 | Gear |
| 35 | 104-1635 | 6 | Bolt-Flange |
| 36 | 104-1636 | 1 | Bearing-Ball |
| 37 | 104-1637 | 1 | Bearing-Ball |
| 38 | 104-1638 | 2 | Spacer |
| 39 | 104-1639 | 1 | Gear |
| 40 | 104-1640 | 1 | Shaft-Counter |
| 41 | 104-1641 | 1 | Case-Differential |
| 42 | 104-1642 | 2 | Gear-Side, Differential |
| 43 | 104-1643 | 2 | Pinion-Differential |
| 44 | 104-1644 | 1 | Shaft-Differential |
| 45 | 104-1645 | 1 | Pin |
| 46 | 104-1646 | 1 | Bearing-Ball |
| 47 | 104-1647 | 1 | Bearing-Needle |
| 48 | 104-1648 | 1 | Gear |
| 49 | 104-1649 | 6 | Bolt |
| 50 | 104-1650 | 1 | Shaft-Axle, LH |
| 51 | 104-1651 | 1 | Shaft-Axle, RH |
| 52 | 104-1652 | 4 | Bearing-Ball |
| 53 | 104-1653 | 1 | Case-Axle, LH |
| 54 | 104-1654 | 1 | Case-Axle, RH |
| 55 | 104-1655 | 4 | Ring-Snap |
| 56 | 104-1656 | 2 | Nut-Castle |
| 57 | 104-1657 | 2 | Ring-Snap |
| 58 | 104-6870 | 1 | Shaft-Shift, Complete |
| 59 | 104-1659 | 2 | Knock-Pipe |
| 60 | 104-1660 | 1 | Ball-Steel |
| 61 | 104-1661 | 1 | Spring |
| 62 | 104-1662 | 1 | Gasket |
| 63 | 104-1663 | 1 | Bolt |
| 64 | 104-1664 | 1 | Gasket |
| 65 | 104-1665 | 6 | Bolt-Flange |
| 66 | 104-1666 | 4 | Bolt-Flange |
| 69 | 104-6867 | 2 | Collar |
| 70 | 33004-00 | 10 | Nut-HF |
| 71 | 104-1671 | 2 | Bracket-Axle |
| 72 | 104-1672 | 1 | Nut-Lock |
| 73 | 104-1673 | 2 | Washer-Spring |
| 74 | 104-1674 | 2 | Washer |
| 75 | 104-1675 | 2 | Hub |
| 76 | 104-6860 | 1 | Lever-Select |
| 78 | 104-8649 | 10 | Stud |
| 80 | 121-9718 | 1 | Cap-Seal |

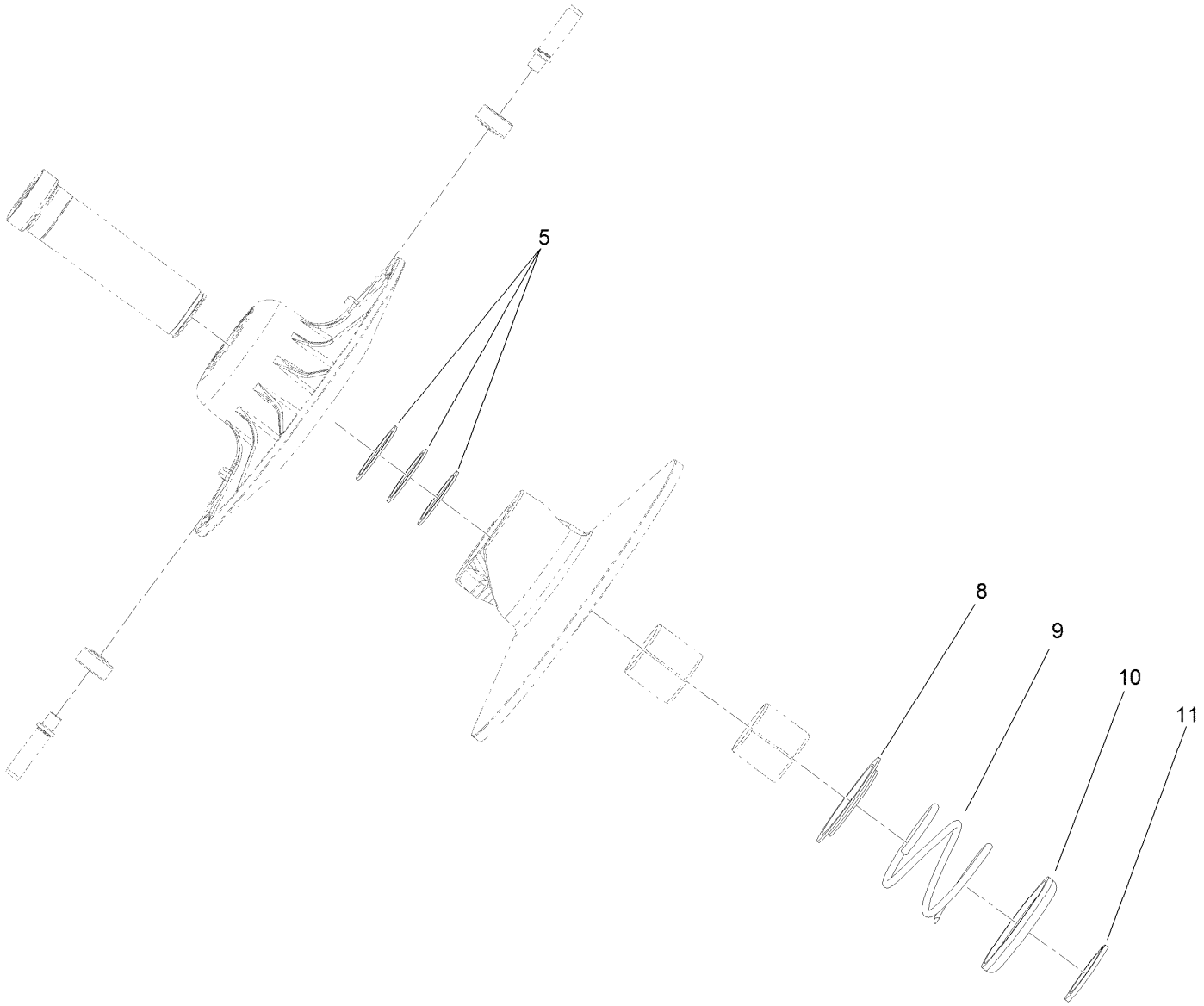


# Secondary Clutch Assembly No. 136-6289

| *Ref.* | *Part Number* | *Qty.* | *Description* |
|---|---|---|---|
| 5 | 119-6018 | 3 | Shim-Thrust |
| 8 | 119-0809 | 1 | Cup-Spring Retainer, Inner |
| 9 | 119-9360 | 1 | Spring-Compression, Black/Almond |
| 10 | 119-0810 | 1 | Cup-Spring Retainer, Outer |
| 11 | 119-0811 | 1 | Ring-Retaining |

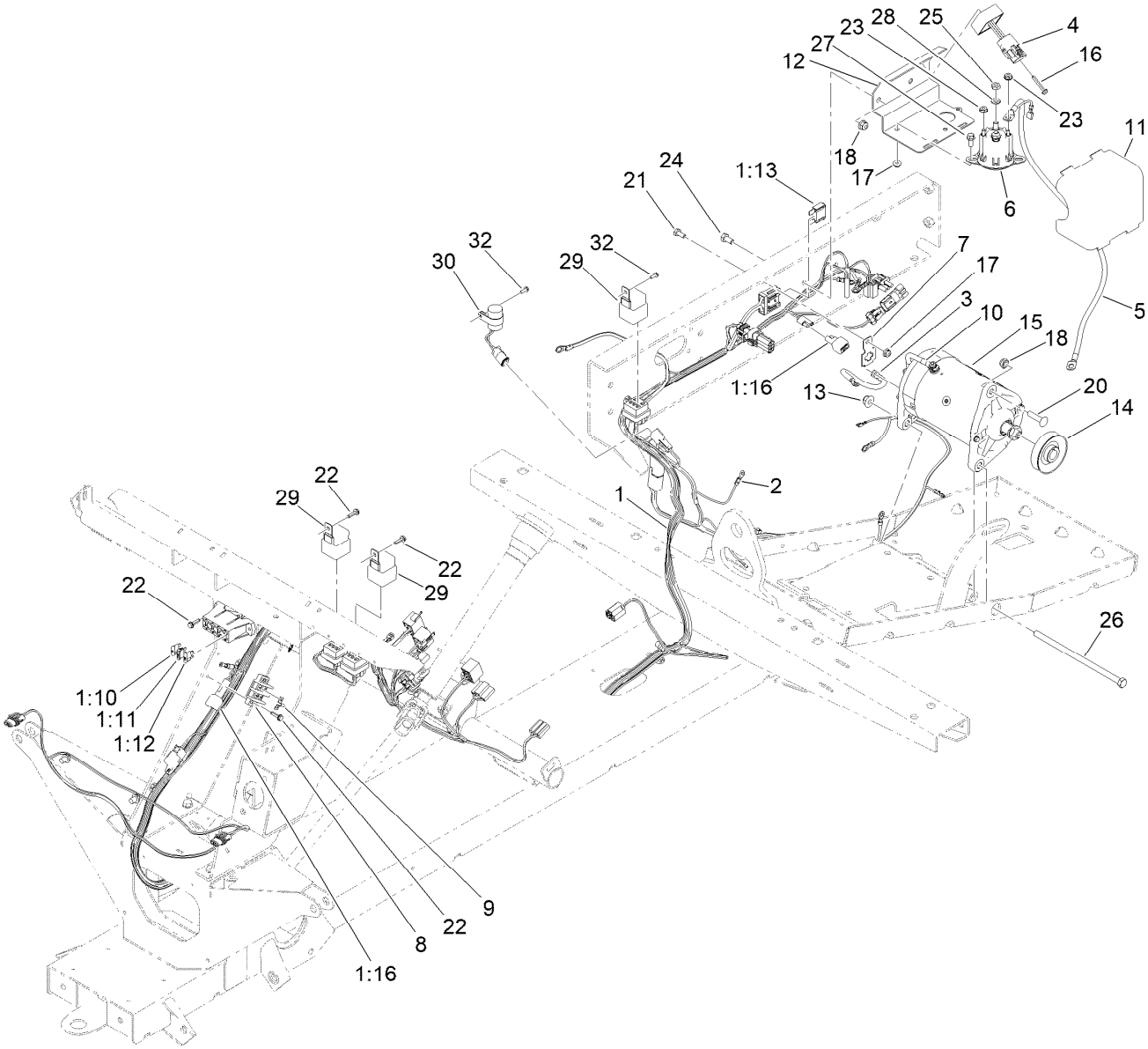


# Electrical Assembly

| Ref. | Part Number | Qty. | Description |
|---|---|---|---|
| 1 | 122-1429 | 1 | Harness-Wire, Main |
| 1:10 | 218-578 | 1 | Fuse-Blade, 10 Amp |
| 1:11 | 109355 | 1 | Fuse-Blade, 15 Amp |
| 1:12 | 109103 | 1 | Fuse-Blade, 30 Amp |
| 1:13 | 114-3342 | 1 | Fuse-Maxi, 60 Amp |
| 1:16 | 100-4918 | 2 | Diode |
| 2 | 122-1140 | 1 | Harness-Wire, Engine |
| 3 | 94-2777 | 1 | Wire-Ground |
| 4 | 119-9492 | 1 | Regulator-Voltage |
| 5 | 112-3537 | 1 | Cable-Battery, Positive |
| 6 | 114-3315 | 1 | Solenoid |
| 7 | 114-5502 | 1 | Clip-Fuse |
| 8 | 42862 | 1 | Block-Terminal, Ground |
| 9 | 42863 | 1 | Strip-Jumper |
| 10 | 122-1176 | 1 | Cable-Battery, Negative |
| 11 | 112-3027 | 1 | Cover-Controller |
| 12 | 119-0752-0P | 1 | Mount-Component |
| 13 | 104-8301 | 1 | Nut-HF, NI |

| Ref. | Part Number | Qty. | Description |
|---|---|---|---|
| 14 | 121-6277 | 1 | Pulley-Drive |
| 15 | 131-8444 | 1 | Starter/Generator ASM |
| 16 | 100-4352 | 1 | Screw-HWH |
| 17 | 104-7201 | 3 | Nut-HF, NI |
| 18 | 104-8300 | 3 | Nut-HF, NI |
| 20 | 112-6950 | 1 | Screw-CARR |
| 21 | 321-3 | 1 | Screw-HH |
| 22 | 100-4351 | 6 | Screw-HWH |
| 23 | 32149-8 | 2 | Nut-Keps |
| 24 | 322-4 | 2 | Screw-HH |
| 25 | 3220-2 | 2 | Nut-Jam |
| 26 | 323-30 | 1 | Screw-HH |
| 27 | 3234-33 | 2 | Screw-HHF |
| 28 | 3255-8 | 2 | Washer-Lock |
| 29 | 99-7430 | 3 | Relay-Mini |
| 30 | 122-1128 | 1 | Module-Delay, Timer |
| 32 | 32144-87 | 2 | Screw-HWHTF |

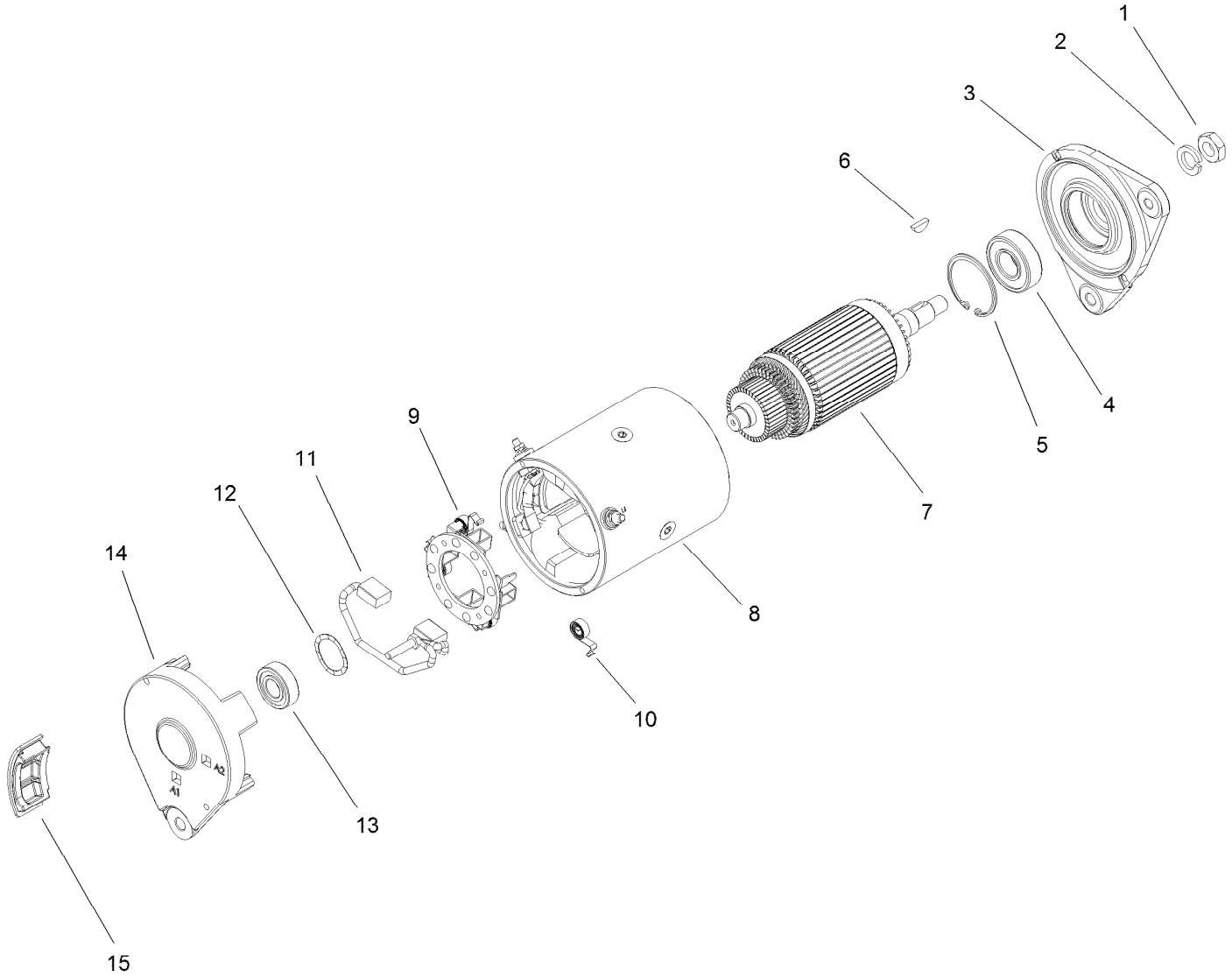


# Starter Generator Assembly No. 131-8444

| Ref. | Part Number | Qty. | Description |
|---|---|---|---|
| 1 | 119-9651 | 1 | Nut |
| 2 | 119-9652 | 1 | Washer-Lock |
| 3 | 133-0599 | 1 | Head-Drive End |
| 4 | 119-9655 | 1 | Bearing |
| 5 | 119-9656 | 1 | Ring-Retaining |
| 6 | 119-9657 | 1 | Key-Woodruff |
| 7 | 119-9658 | 1 | Armature ASM |
| 8 | | 1 | Frame And Field Assembly ● |
| 9 | 119-9661 | 1 | Brush Box ASM |
| 10 | 119-9660 | 4 | Spring-Brush |
| 11 | 119-9659 | 1 | Brush Lead And Terminal Service Kit |
| 12 | 119-9662 | 1 | Washer-Wave |
| 13 | 119-9663 | 1 | Bearing |
| 14 | | 1 | Head-End, Cummutator ● |
| 15 | 133-0600 | 4 | Plug-Rubber |

● Not serviced separately

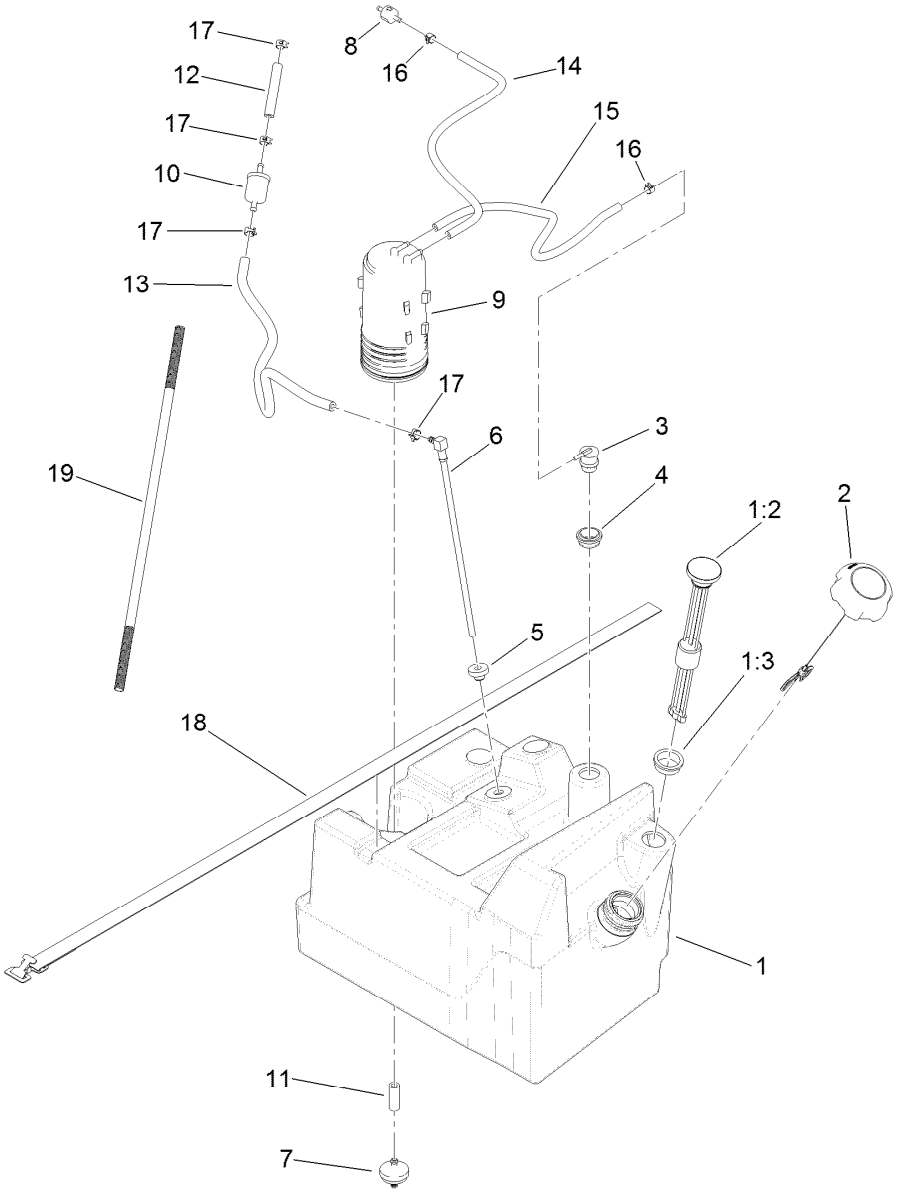


# Fuel Tank Assembly

| Ref. | Part Number | Qty. | Description |
|---|---|---|---|
| 1 | 121-9769 | 1 | Fuel Tank ASM |
| 1:2 | 99-7262 | 1 | Gauge-Fuel |
| 1:3 | 95-8972 | 1 | Grommet |
| 2 | 137-4127 | 1 | Cap-Fuel |
| 3 | 114-0285 | 1 | Valve-Rollover |
| 4 | 114-0284 | 1 | Grommet |
| 5 | 46-6560 | 1 | Bushing |
| 6 | 99-7264 | 1 | Pipe-Stand |
| 7 | 115-7854 | 1 | Filter-Fuel, Inline |
| 8 | 133-8499 | 1 | Valve-Check, Vacuum |
| 9 | 117-1221 | 1 | Canister-Carbon, 800Cc |
| 10 | 94-2690 | 1 | Filter-Fuel |
| 11 | 106-5317 | 1 | Hose-Fuel |
| 12 | 109-0303 | 1 | Hose-Fuel |
| 13 | 110-4103 | 1 | Hose-Fuel |
| 14 | 75-4701 | 1 | Hose-Fuel |
| 15 | 110-8751 | 1 | Hose-Fuel |
| 16 | 2412-146 | 2 | Clamp-Hose |
| 17 | 2412-98 | 4 | Clamp-Hose |
| 18 | 3339-175 | 1 | Strapping-Web |
| 19 | 99-7129 | 1 | Conduit-Line, Fuel |

# Attachments and Accessories

## For 07235TC Workman MDX Utility Vehicle

| Product Name | Model/Part |
|---|---|
| Electric Bed Lift Kit, 2014 and After Workman MD/MDX/MDX-D Utility Vehicle | 07389 |
| Receiver Hitch Kit | 07278 |
| Roll-Over Protection System | 07276 |
| Canopy Kit | 07324 |
| Folding Windshield Kit | 07326 |
| Solid Windshield Kit | 07325 |
| Cab Kit | 07320 |
| Work Light Kit | 130-5485 |
| Beacon Kit | 130-5484 |
| Door Kit with Sliding Window | 07356 |
| Windshield Washer Fluid Kit, 2015 and after Workman MD/HD Series Utility Vehicle | 130-5615 |
| Lift Wire Harness Kit | 115-7823 |
| Backup Alarm Kit | 115-7824 |
| Tire-AT 489, 24x10.5-10 | 104-7061 |
| Tire-AT 489, 22x9.5-10 | 104-7062 |
| Wireless Hourmeter | 115-4754 |
| Base Station Kit, Wireless Hourmeter System | 115-9542 |
| Spark Arrestor Screen | 94-8157 |
| Repeater Kit, Wireless Hourmeter System | 115-9543 |
| Battery Kit | 119-9680 |
| External Antenna Kit, Wireless Hourmeter System | 115-9524 |
| Stake Pocket Adapter Kit, 2011 and After Workman MD Series Utility Vehicle | 119-9604 |
| Tie-Down Kit, 2011 and After Workman MD Series Utility Vehicle | 119-9605 |
| Hitch ASM | 131-3462 |
| Road Light and Homologation Kit | 120-5031 |
| Brake and Signal Light Kit | 120-5044 |
| Exterior Mirror Kit | 130-5448 |
| Interior Mirror Kit | 130-5449 |
| Cargo Bed Installation Kit with Manual Dump, 2011 to 2013 Workman MD Series Utility Vehicle | 127-7385 |
| Cargo Bed Installation Kit with Electric Lift, 2011 to 2013 Workman MD Series Utility Vehicle | 127-7386 |
| Horn Kit | 115-7825 |
| Key Start Kit | 121-6338 |
| LED Worklight Kit | 133-0554 |
| ROPS Beacon Kit | 133-0609 |
| Front Spring Kit, 2016 and After MDX or MDX-D Series Utility Vehicle | 133-0630 |
| Spanner Wrench | 132-5069 |
| Brush Guard Kit | 07145 |
| Side Mirror Kit | 119-9546 |
| Service Hood ASM | 133-7209 |
| Wireless Hour Meter Finish Kit | 138-5698 |
| Door Mount Mirror Kit | 136-1997 |
| Hose Reel Mounting Kit | 07027 |
| Trash Can Mounting Kit | 07028 |
| Walk Spreader Mounting Kit | 07029 |

# Attachments and Accessories (continued)

Front Hitch Kit, Workman GTX Series Utility Vehicles with Brush Guard ..... 07146
Front Hitch Kit, Workman GTX or MDX Series Utility Vehicles without Brush Guard ..... 07147
Shim-Limiter .....119-0807
Small Seat Cover..... 131-6690
Tire (22 X 9.50-10) 4-PLY ..... 127-7435
Tire (24 X 12.00-10) 4P K506 ..... 131-6667
Aggressive Tire Kit, Workman MDX Series Utility Vehicle .....136-1135
MVP Filter Kit, Mid-Duty Workman Utility Vehicle..... 30004

TORO®

Count on it.