Form No. 3326-308

TORO®

Snow Commander™

Snowthrower

Model No. 38601—220000001 and Up

Model No. 38603—220000001 and Up

PROTOTYPE

Operator's Manual

CE

International English (GB)

This spark ignition system complies with Canadian ICES-002.

Ce système d'allumage par étincelle de véhicule est conforme à la norme NMB-002 du Canada.

Contents

	Page
Introduction	2
Safety	3
Safe Operating Practices	3
Toro Snowthrower Safety	4
Sound Pressure Level	4
Sound Power Level	4
Vibration Level	4
Safety and Instruction Decals	5
Assembly	7
Loose Parts	7
Unfolding the Handle	7
Installing the Discharge Chute	8
Before Starting	8
Mixing Gasoline and Oil	8
Filling the Fuel Tank	9
Operation	9
Operating Controls	9
Starting the Engine	10
Stopping the Engine	10
Starting the Rotor Blades	10
Stopping the Rotor Blades	10
Starting the Traction Drive	10
Stopping the Traction Drive	10
Adjusting the Discharge Chute	11
Snowthrowing Tips	11
Maintenance	12
Recommended Maintenance Schedule	12
Adjusting the Rotor Control Cable	12
Adjusting the Traction Drive Cable	14
Replacing the Rotor Blades	14
Replacing the Scraper	15
Replacing the Spark Plug	16
Replacing the Drive Belt	16
Checking the Tire Pressure	17
Emptying the Fuel Tank	17
Storage	18
Preparing the Fuel System	18
Preparing the Engine	18
Preparing the Snowthrower	18
Folding the Handle	18
Troubleshooting	19

Introduction

Read this manual carefully to learn how to operate and maintain your product properly. The information in this manual can help you and others avoid injury and product damage. Although Toro designs and produces safe products, you are responsible for operating the product properly and safely.

Whenever you need service, genuine Toro parts, or additional information, contact an Authorized Service Dealer or Toro Customer Service and have the model and serial numbers of your product ready. Figure 1 illustrates the location of the model and serial numbers on the product.

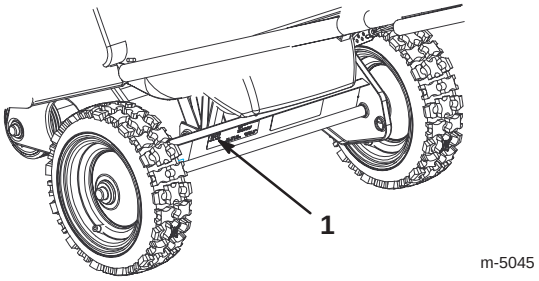

Figure 1

1. Location of the model and serial numbers

Write the product model and serial numbers in the space below:

Model No. _____

Serial No. _____

This manual identifies potential hazards and has special safety messages that help you and others avoid personal injury and even death. ***Danger***, ***Warning***, and ***Caution*** are signal words used to identify the level of hazard. However, regardless of the hazard, be extremely careful.

Danger signals an extreme hazard that *will* cause serious injury or death if you do not follow the recommended precautions.

Warning signals a hazard that *may* cause serious injury or death if you do not follow the recommended precautions.

Caution signals a hazard that may cause minor or moderate injury if you do not follow the recommended precautions.

This manual uses 2 other words to highlight information. **Important** calls attention to special mechanical information and **Note:** emphasizes general information worthy of special attention.

PROTOTYPE

© 2001 by The Toro Company
8111 Lyndale Avenue South
Bloomington, MN 55420-1196

All Rights Reserved

Printed in the USA

Safety

This single-stage snowthrower meets or exceeds the ISO standard 8437 in effect at the time of production.

To ensure maximum safety and best performance, and to gain knowledge of the product, it is essential that you and any other operator of the snowthrower read and understand the contents of this manual before the engine is ever started.

⚠ This is the safety alert symbol. It is used to alert you to potential personal injury hazards. Obey all safety messages that follow this symbol to avoid possible injury or death.

Improperly using or maintaining this snowthrower could result in injury or death. To reduce this potential, comply with the following safety instructions.

Safe Operating Practices

The following instructions have been adapted from the ANSI/OPEI B71.3–1995 standard and the ISO 8437:1989 standard. Information or terminology specific to Toro snowthrowers is enclosed in parenthesis.

Training

- Read the operator's manual carefully. Be thoroughly familiar with the controls and the proper use of the equipment. Know how to stop the unit and disengage the controls quickly.
- Never allow children to operate the snowthrower. Never allow adults to operate the snowthrower without proper instruction.
- Keep the area of operation clear of all persons (particularly small children) and pets.
- Exercise caution to avoid slipping or falling, especially when operating the snowthrower in reverse.

Preparation

- Thoroughly inspect the area where you will use the snowthrower. Remove all doormats, sleds, boards, wires, and other foreign objects.
- Do not operate the snowthrower without wearing adequate winter garments. Wear footwear that will improve your footing on slippery surfaces.
- Handle fuel with care; it is highly flammable.
  - Use an approved fuel container.
  - Never add fuel to a running or hot engine.
  - Fill the fuel tank outdoors with extreme care. Never fill the fuel tank indoors.
  - Replace the fuel tank cap securely and wipe up any spilled fuel.
- Use only the power cord supplied with the snowthrower and a receptacle appropriate for use with the power cord for electric-starting motors.
- Never attempt to make any adjustments while the engine is running, except where specifically recommended by Toro.
- Let the engine and the snowthrower adjust to the outdoor temperature before starting to clear snow.
- Operating any powered machine can result in foreign objects being thrown into the eyes. Always wear safety glasses or eye shields while operating, adjusting, or repairing the snowthrower.

Operation

- Do not put hands or feet near or under rotating parts. Keep clear of the discharge opening at all times.
- Exercise extreme caution when operating on or crossing gravel drives, walks, or roads. Stay alert for hidden hazards or traffic.
- After striking a foreign object, stop the engine, remove the ignition key, thoroughly inspect the snowthrower for any damage, and repair the damage before operating the snowthrower.
- If the unit should start to vibrate abnormally, stop the engine and check immediately for the cause. Vibration is generally a warning of trouble.
- Stop the engine whenever you leave the operating position, before unclogging the discharge chute, and when making any repairs, adjustments, or inspections.
- When cleaning, repairing, or inspecting, make certain that the rotor blades and all moving parts have stopped. Disconnect the spark-plug wire, and keep the wire away from the spark plug to prevent someone from accidentally starting the engine.
- Do not run the engine indoors, except when starting it and for moving the snowthrower in or out of the building. Open the outside doors; exhaust fumes are dangerous.
- Do not clear snow across the face of slopes. Exercise extreme caution when changing direction on slopes. Do not attempt to clear steep slopes.
- Never operate the snowthrower without proper guards or other safety devices in place.
- Never operate the snowthrower near glass enclosures, automobiles, window wells, and drop-offs without properly adjusting the snow discharge angle. Keep children and pets away.

PROTOTYPE

- Do not overload the machine capacity by attempting to clear snow at too fast a rate.
- Never operate the machine at high transport speeds on slippery surfaces. Look behind and use care when moving in reverse.
- Never direct the discharge at bystanders or allow anyone in front of the unit.
- Disengage the power to the rotor blades when the snowthrower is being transported or when not in use.
- Never operate the snowthrower without good visibility or light. Always be sure of your footing, and keep a firm hold on the handle. Walk; never run.

Maintenance and Storage

- Check all fasteners at frequent intervals for proper tightness to be sure that the equipment is in safe working condition.
- Never store the machine with fuel in the fuel tank inside a building where ignition sources are present, such as hot water and space heaters and clothes dryers. Allow the engine to cool before storing in any enclosure.
- Always refer to this operator's manual for important details if the snowthrower is to be stored for an extended period.
- Maintain or replace safety and instruction labels when necessary.

Toro Snowthrower Safety

The following list contains safety information specific to Toro products or other safety information that you must know.

- *Rotating rotor blades can injure fingers or hands.* Stay behind the handles and away from the discharge opening while operating the snowthrower. *Keep your face, hands, feet, and any other part of your body or clothing away from moving or rotating parts.*
- Before adjusting, cleaning, repairing, and inspecting the snowthrower, and before unclogging the discharge chute, *stop the engine, remove the key, and wait for all moving parts to stop*. Also, disconnect the wire from the spark plug and keep it away from the spark plug to prevent someone from accidentally starting the engine.
- Use a stick, *not your hands*, to remove obstructions from the discharge chute.
- *Before* leaving the operating position, stop the engine, remove the key, and wait for all moving parts to stop.
- Do not wear loose-fitting clothing that could get caught in moving parts.
- If a shield, safety device, or decal is damaged, illegible, or lost, repair or replace it before beginning operation. Also, tighten any loose fasteners.
- *Do not* smoke while handling gasoline.
- *Do not* use the snowthrower on a roof.
- Do not touch the engine while it is running or soon after it has stopped because the engine may be hot enough to cause a burn. Do not add oil or check the oil level in the crankcase while the engine is running.
- Perform only those maintenance instructions described in this manual. Before performing any maintenance, service, or adjustment, stop the engine, remove the key and disconnect the wire from the spark plug. Keeping the wire away from the spark plug to prevent someone from accidentally starting the engine. If major repairs are ever needed, contact your Authorized Service Dealer.
- Do not change the governor settings on the engine.
- When storing the snowthrower for more than 30 days, drain the fuel from the fuel tank to prevent a potential hazard. Store fuel in an approved fuel container. Remove the key from the ignition switch before storing the snowthrower.
- To ensure the best performance and safety, purchase only genuine Toro replacement parts and accessories.

Sound Pressure Level

This unit has a sound pressure at the operator's ear of 93 dB(A), based on measurements of identical machines per Directive 84/538/EEC.

Sound Power Level

This unit has a sound power level of 106 LwA, based on measurements of identical machines per Directive 84/538/EEC.

PROTOTYPE

Vibration Level

This unit has a maximum hand-arm vibration level of 4.9 m/s^2, based on measurements of identical machines per EN 1033.

Safety and Instruction Decals

Safety decals and instructions are easily visible to the operator and are located near any area of potential danger. Replace any decal that is damaged or lost.



94-2561

1. Hot surface; do not touch
2. Stay a safe distance from the machine

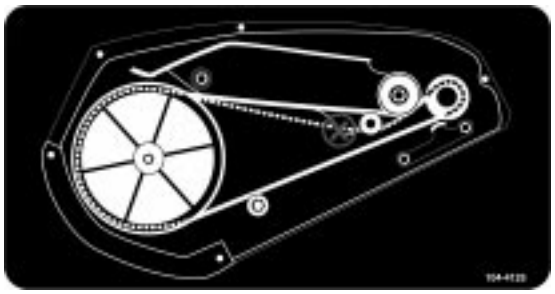

104-4125

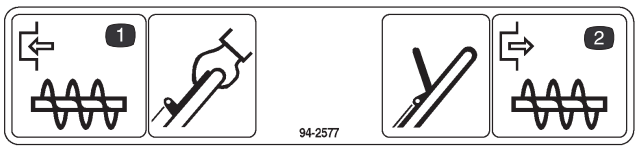

94-2577

1. Squeeze the control bar to engage the rotor blades
2. Release the control bar to release the rotor blades



104-9744

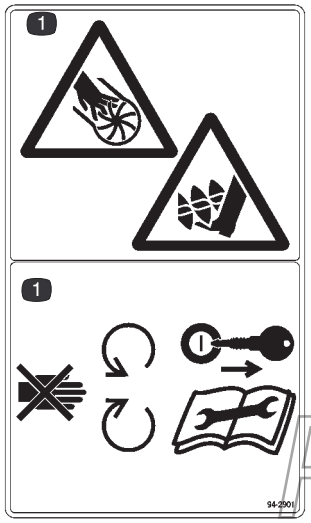

94-2901

1. Cutting/dismemberment in impeller hazard—stay away from moving parts, stop the engine, and remove the key before performing maintenance

PROTOTYPE

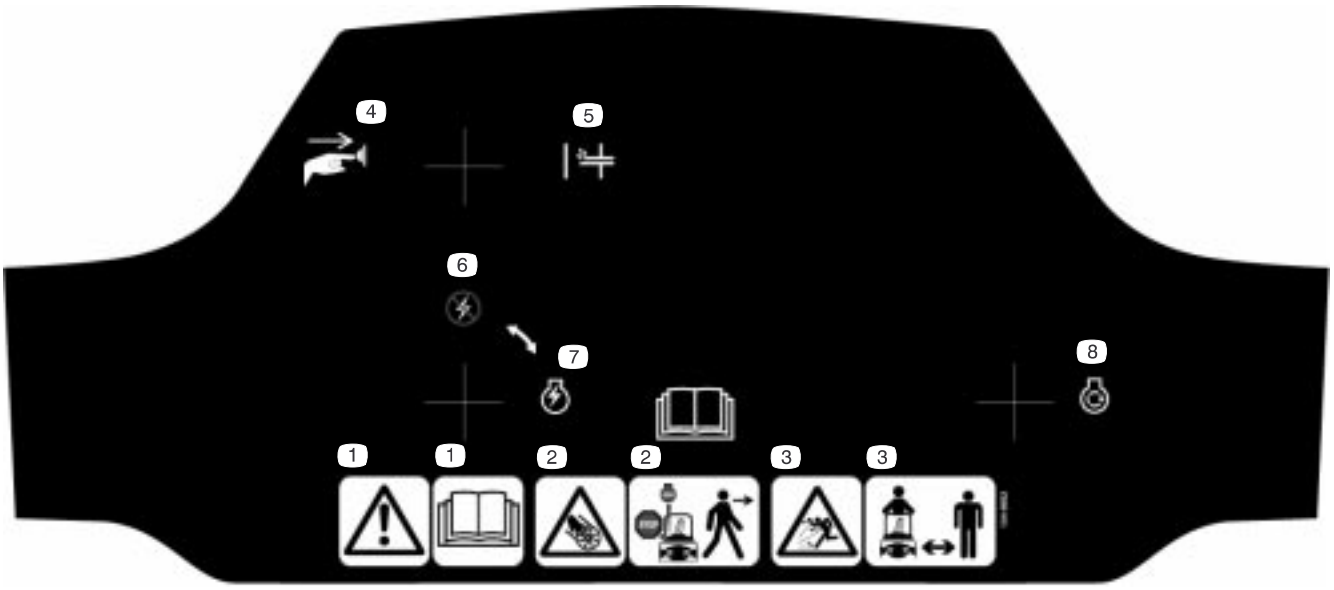

104-8662 (Model 38601 only)

1. Warning—read the *Operator's Manual*
2. Stay away from moving parts, and stop the engine and remove the key before leaving the machine
3. Thrown object hazard—keep bystanders away
4. Push the button
5. Primer
6. Ignition off
7. Ignition on
8. Recoil starter

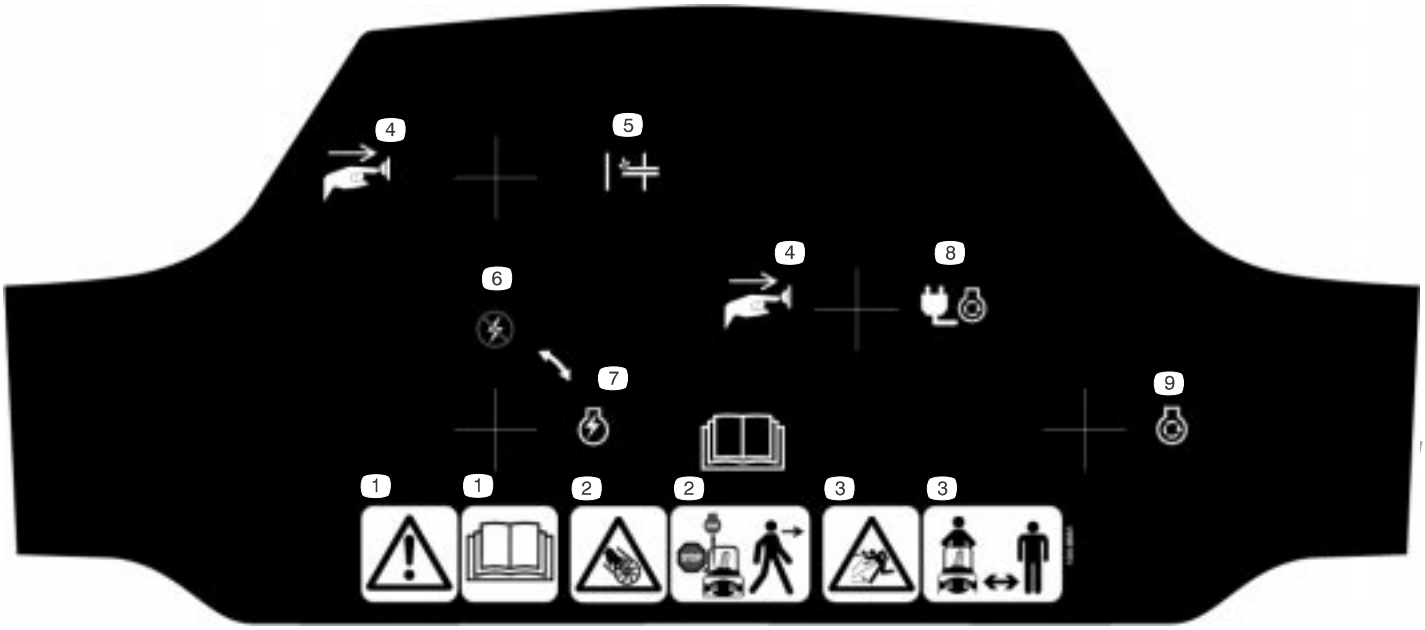

104-8661 (Model 38603 only)

1. Warning—read the *Operator's Manual*
2. Stay away from moving parts, and stop the engine and remove the key before leaving the machine
3. Thrown object hazard—keep bystanders away
4. Push the button
5. Primer
6. Ignition off
7. Ignition on
8. Electric starter
9. Recoil starter

Assembly

Note: Determine the left and right sides of the machine from the normal operating position.

Loose Parts

DESCRIPTION	QTY.	USE
Screws	3	Installing the discharge chute
Locknuts	3	
Washers	3	
Discharge chute	1	
Chute handle	1	
Ignition key	1	Starting and stopping the engine

Unfolding the Handle

1. Cut the tie that secures the rotor control cable (Fig. 2) to the handle.

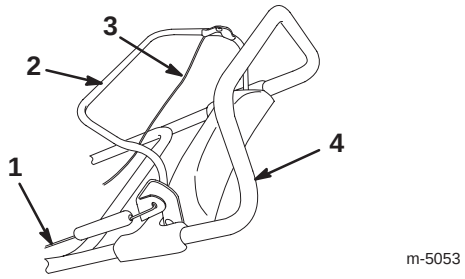

Figure 2

1. Rotor control cable
2. Control bar
3. Traction drive cable
4. Handle

Important If you do not cut the tie, the rotor blades will not function properly.

2. Loosen the knobs and pull out the handle locks until the upper handle rotates freely (Fig. 3).

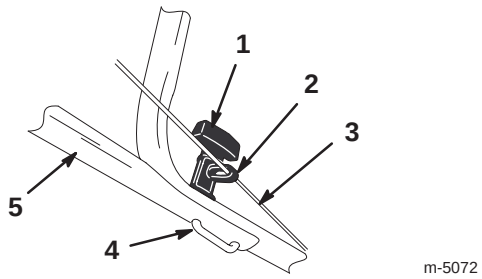

Figure 3

1. Knob (2)
2. Cable guide
3. Traction drive cable
4. Handle lock (2)
5. Upper handle (right side)

3. Position the upper handle as shown in Figure 4.

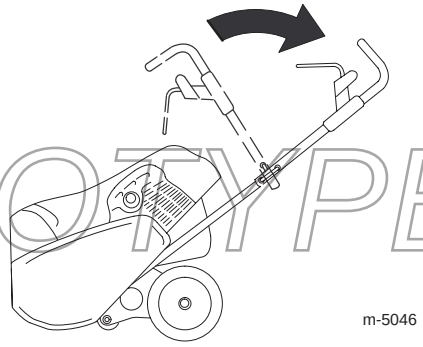

Figure 4

4. Fully insert the handle locks (Fig. 3).

5. Ensure that the cable guide is in position as shown in Figure 3.

6. Tighten the knobs until they are snug.

PROTOTYPE

Important Ensure that the rotor control cable and the traction drive cable are properly adjusted (Fig. 2). Refer to Adjusting the Rotor Control Cable on page 12, and to Adjusting the Traction Drive Cable on page 14.

Installing the Discharge Chute

1. Place the discharge chute over the chute ring, and align the hole in the back of the discharge chute with the center hole in the chute ring (Fig. 5).

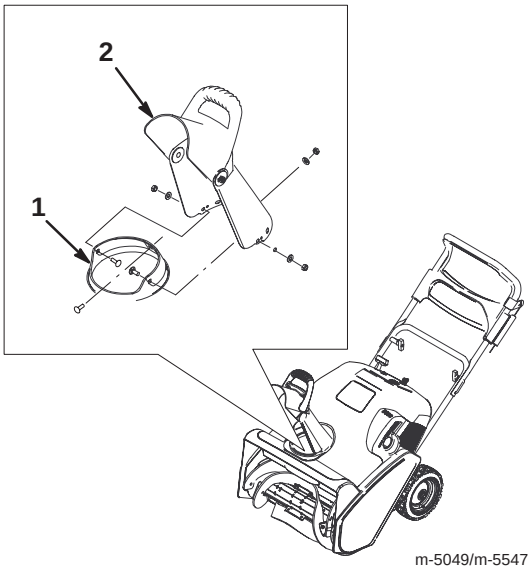

Figure 5

1. Chute ring
2. Discharge chute

2. Insert a screw in the center hole of the chute ring from the inside until the screw just passes through the hole in the discharge chute (Fig. 5).
3. Install a washer and a locknut on the screw, and tighten the locknut until it is finger tight.
4. Align the remaining holes of the discharge chute and the chute ring, and insert the 2 remaining screws through the holes from the inside of the chute ring.
5. Install the washers and the locknuts on the screws, and tighten the locknuts until they are finger tight.
6. Tighten all locknuts *securely.*

Before Starting

Mixing Gasoline and Oil

Your Toro snowthrower is powered by a 2-cycle engine that requires a 50:1 gasoline-to-oil mixture.

Use only clean, unleaded gasoline no more than 30 days old and with an octane rating of 87 or higher. Using unleaded gasoline reduces combustion chamber deposits and promotes longer spark plug life.

Engines certified to comply with U.S. EPA emission regulations for ULGE engines are certified to operate on a mixture of regular unleaded gasoline and oil, include the following emission control system(s): EM and TWC (if equipped), and do not include any user-adjustable features.

Important *Do not* use methanol, gasoline containing methanol, gasohol containing more than 10% ethanol, premium gasoline, or white gas. Using these fuels can damage the fuel system.

Important *Do not* use an automotive oil (such as SAE 30 or 10W30), a 2-cycle oil that is not NMMA TCW-certified, or a fuel mixed at the wrong gasoline-to-oil ratio. This can cause engine damage not covered under the Toro warranty.

Danger

In certain conditions, gasoline is extremely flammable and highly explosive. A fire or explosion from gasoline can burn you and others and can damage property.

- **Fill the fuel tank outdoors, in an open area, and when the engine is cold. Wipe up any gasoline that spills.**
- **Do not fill the fuel tank completely full. Add gasoline to the fuel tank until the level is 1/4 to 1/2 in. (6 to 13 mm) below the bottom of the filler neck. This empty space in the tank allows the gasoline to expand.**
- **Never smoke when handling gasoline, and stay away from an open flame or where a spark may ignite the gasoline fumes.**
- **Store gasoline in an approved fuel container and keep it out of the reach of children.**
- **Never buy more than a 30-day supply of gasoline.**

PROTOTYPE

Danger

When fueling, under certain circumstances, a static charge can develop, igniting the gasoline. A fire or explosion from gasoline can burn you and others and damage property.

- **Always place gasoline containers on the ground and away from your vehicle before filling.**
- **Do not fill gasoline containers inside a vehicle or on a truck or trailer bed because interior carpets or plastic truck bed liners may insulate the container and slow the loss of any static charge.**
- **When practical, remove gasoline-powered equipment from the truck or trailer and refuel the equipment with its wheels on the round.**
- **If this is not possible, then refuel such equipment on a truck or trailer from a portable container, not from a gasoline dispenser nozzle.**
- **If you must use a gasoline dispenser nozzle, keep the nozzle in contact with the rim of the fuel tank or container opening at all times until fueling is complete.**

Note: Use a fuel stabilizer/conditioner for all Toro gasoline-powered products during operation and storage. A fuel stabilizer/conditioner cleans the engine during operation and prevents gum-like varnish deposits from forming in the engine during storage. A fuel stabilizer/conditioner works best when you mix it with fresh gasoline. If you use *Toro 50:1 2-Cycle Oil (Fuel Stabilizer Added)*, you do not need to add a fuel stabilizer/conditioner.

Important Do not use fuel additives except a fuel stabilizer during storage. Do not use fuel stabilizers with an alcohol base, such as ethanol, methanol, or isopropanol.

1. Pour a half gallon (1.9 liters) of fresh, unleaded gasoline into an approved fuel container.

Note: Do not mix gasoline and oil in the fuel tank. Oil at room temperature mixes easier and more thoroughly than cold oil. Oil below 32°F (0°C) requires additional mixing.

2. Add the full amount of *Toro 50:1 2-Cycle Oil (Fuel Stabilizer Added)* or an equivalent high grade, NMMA TCW-certified 2-cycle oil to the gasoline according to the chart below:

50:1 Gasoline-to-Oil Ratio Mixing Chart	
Gasoline	Oil
1 gallon (4 liters)	2.6 ounces (80 ml)
2 gallons (8 liters)	5.2 ounces (160 ml)
5 gallons (20 liters)	13 ounces (400 ml)

3. Install the cap on the fuel container.
4. Shake the container to mix the gasoline and oil thoroughly.
5. Slowly remove the cap and add the remaining amount of gasoline.

Filling the Fuel Tank

Important Do not overfill the fuel tank. The gasoline-and-oil mixture must have room to expand.

1. Clean around the fuel tank cap; do not allow snow or water to enter the fuel tank.
2. Remove the fuel tank cap and fill the fuel tank with the gasoline-and-oil mixture until the level is 1/4 to 1/2 in. (6 to 13 mm) below the bottom of the filler neck. *Do not fill into the filler neck.*
3. Install the fuel tank cap securely and wipe up any spilled fuel.

Operation

Note: Determine the left and right sides of the machine from the normal operating position.

Operating Controls

The snowthrower control panel contains a key switch, a primer, a recoil starter, and an electric-start button (electric-start model only). The choke lever and the cord connection (for the electric-start model) are located below the control panel as shown in Figure 6.

PROTOTYPE

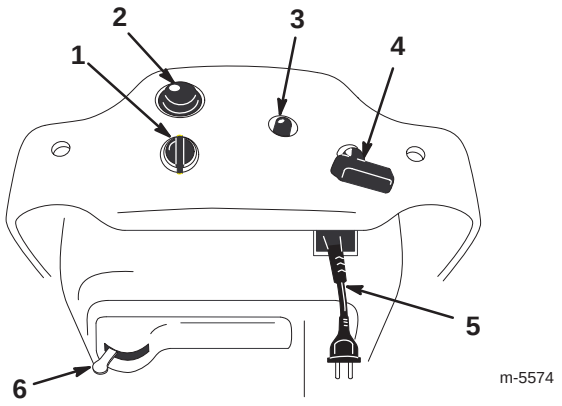

Figure 6

1. Key switch
2. Primer
3. Electric-start button (electric-start model only)
4. Recoil start
5. Power cord (electric-start model only; below the control panel)
6. Choke lever

Starting the Engine

1. Turn the key to the *On* position.

2. Move the choke lever to the right.

3. Cover the hole in the center of the primer with your thumb and push the primer in twice, pausing a moment between pushes. In extremely cold temperatures, repeat this step if necessary.

Note: Take off your glove when you push in the primer so that air cannot escape from the primer hole.

Note: Do not use the choke or the primer when starting a warm engine.

4. Start the engine by doing the following:

For a recoil starter: Hold the snowthrower handle with one hand and pull the recoil starter vigorously with the other hand.

For an electric starter:

A. Connect the power cord to a standard household power outlet.

Caution

If you leave the snowthrower plugged into a power outlet, someone can inadvertently start the snowthrower and injure people or damage property.

Unplug the power cord whenever you are not starting the snowthrower.

B. Push the starter button.

Note: Run the electric starter no more than 10 times at intervals of 5 seconds on, then 5 seconds off.

Important Running the electric starter extensively can overheat and damage the starter.

Note: If the engine does not start after this series of attempts, wait at least 40 minutes to allow the starter to cool before attempting to start it again.

Note: If the engine does not start after the second series of attempts, take the snowthrower to an Authorized Service Dealer for service.

C. When the engine starts, disconnect the power cord from the snowthrower and the outlet.

5. With the engine running, move the choke lever to the left slowly.

Stopping the Engine

Turn the key to the *Off* position and wait for all moving parts to stop before leaving the operating position.

Starting the Rotor Blades

To start the rotor blades, squeeze the control bar toward the handle until the snowthrower begins to pivot.

Stopping the Rotor Blades

To stop the rotor blades, release the control bar.

Note: When you release the control bar, the rotor blades stop, but the engine continues to run.

Starting the Traction Drive

To start the traction drive, slowly squeeze the control bar toward the handle. The front of the snowthrower pivots downward. When the rotor blades touch the ground, the snowthrower begins to move forward. Squeezing the control bar completely to the handle provides maximum traction.

PROTOTYPE

Note: The traction is most aggressive (the traction speed is fastest) when the rotor blades are new. If you want to reduce the aggressiveness of the traction, refer to Adjusting the Traction Drive Cable on page 14.

Stopping the Traction Drive

To stop the traction drive, partially release the control bar until the rotor blades lift off the ground, disengaging the traction drive. Releasing the control bar completely stops both the traction drive and the rotor blades.

Adjusting the Discharge Chute

Rotate the chute crank clockwise to move the discharge chute to the right or counterclockwise to move the chute to the left (Fig. 7). The chute deflector handle on top of the discharge chute controls the height of the snow stream.

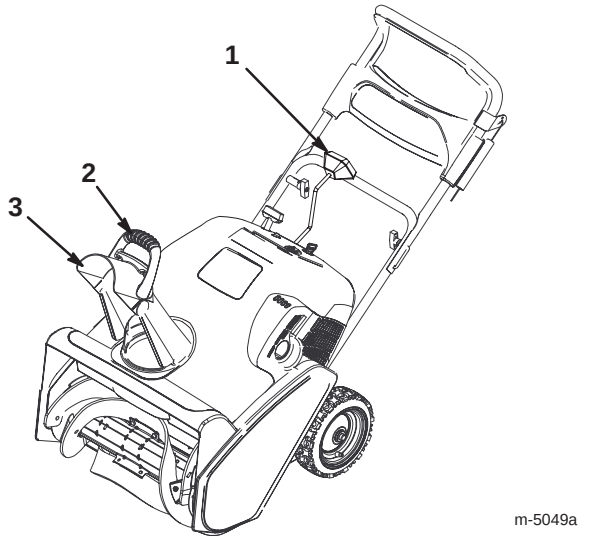

Figure 7

1. Chute crank
2. Chute deflector handle
3. Chute

Snowthrowing Tips

Warning

The rotor blades can throw stones, toys and other foreign objects and cause serious personal injury to the operator or to bystanders.

- **Keep the area to be cleared free of all objects that the rotor blades could pick up and throw.**
- **Keep all children and pets away from the area of operation.**

PROTOTYPE

- Remove the snow as soon as possible after it falls. This produces the best snow removal results.
- The snowthrower clears down to the ground and propels itself forward when you engage the traction drive.
- If the snowthrower does not propel itself forward on slippery surfaces or in heavy snow, push forward on the handle, but allow the snowthrower to work at its own pace.
- Overlap each swath to ensure complete snow removal.
- Discharge the snow downwind whenever possible.
- Do not attempt to clear snow from a crushed-rock or gravel surface.
- In snowy and cold conditions, some controls and moving parts may freeze. *Do not use excessive force when trying to operate frozen controls.* If you have difficulty operating any control or part, start the engine and let it run for a few minutes.
- After clearing the snow, let the engine run for a few minutes to prevent moving parts from freezing. Shut off the engine, wait for all moving parts to stop, and remove all ice and snow from the snowthrower.
- With the engine off, pull the recoil starter handle several times to prevent it from freezing up.

Maintenance

Note: Determine the left and right sides of the machine from the normal operating position.

Recommended Maintenance Schedule

Maintenance Service Interval	Maintenance Procedure
Initial	• Check the rotor control cable and the traction drive cable both initially and after the first hour of operation; adjust them if necessary. Refer to Adjusting the Rotor Control Cable on page 12 and to Adjusting the Traction Drive Cable on page 14. • Check for loose fasteners and tighten them if necessary.
Annually	• Check the rotor control cable and the traction drive cable. Adjust them if necessary. Refer to Adjusting the Rotor Control Cable on page 12 and to Adjusting the Traction Drive Cable on page 14. • Inspect the rotor blades and replace them if necessary. Replace the scraper when you replace the rotor blades. Refer to Replacing the Rotor Blades on page 14 and to Replacing the Scraper on page 15. • Inspect the scraper and replace it if necessary. If the rotor blades are partially or completely worn, replace the rotor blades when you replace the scraper. Refer to Replacing the Scraper on page 15 and to Replacing the Rotor Blades on page 14. • Inspect the spark plug and check the gap; replace the spark plug if necessary. Refer to Replacing the Spark Plug on page 16. • Inspect the drive belt and replace it if necessary. Refer to Replacing the Drive Belt on page 16. • Check the pressure in the tires and inflate them to between 15 and 20 psi (103 and 137 kPa). Refer to Checking the Tire Pressure on page 17. • For storage, add stabilizer, drain the fuel, and run the engine until the fuel tank and the carburetor are empty. Refer to Emptying the Fuel Tank on page 17. • Check for loose fasteners and tighten them if necessary.

Caution

If you leave the wire on the spark plug, someone could start the engine accidentally and seriously injure you or other bystanders.

Disconnect the wire from the spark plug before you do any maintenance. Set the wire aside so that it does not accidentally contact the spark plug.

PROTOTYPE

Adjusting the Rotor Control Cable

Check the rotor control cable for proper adjustment initially, after the first operating hour, and then annually thereafter.

Checking the Rotor Control Cable

1. Stop the engine and wait for all moving parts to stop.
2. Move the left side of the control bar back toward the handle until you remove the slack in the cable (Fig. 8).

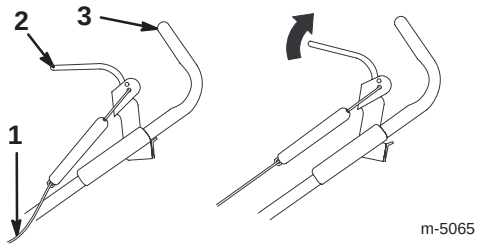

Figure 8

1. Rotor control cable
2. Control bar
3. Handle

3. Ensure that a 1/8 to 1/4 in. (3 to 6 mm) gap exists between the control bar bracket and the handle as shown in Figure 9.

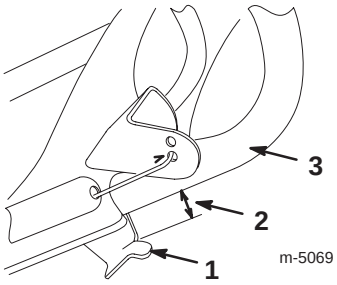

Figure 9

1. Control bar bracket
2. 1/8 to 1/4 in. (3 to 6 mm) gap
3. Handle

Important The rotor control cable must have slack in it when you disengage the control bar in order for the rotor blades to stop properly.

Adjusting the Rotor Control Cable

1. Unhook the spring end from the hole in the center of the control bar bracket as shown in Figure 10.

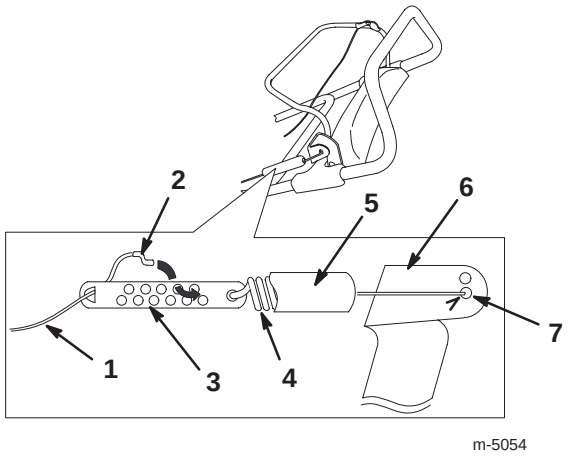

Figure 10

1. Cable
2. Z-fitting
3. Cable adjuster
4. Spring
5. Spring cover
6. Control bar bracket
7. Hole in the center of the control bar bracket

2. Slide the spring cover up the cable adjuster.

3. Unhook the Z-fitting from the cable adjuster (Fig. 10), and position it in a different hole on the adjuster to obtain a gap of 1/8 to 1/4 inch (3 to 6 mm) between the control bar bracket and the handle (Fig. 9).

Note: Moving the Z-fitting to a hole closer to the spring decreases the gap between the control bar bracket and the handle; moving it to a hole farther from the spring increases the gap.

4. Install the spring cover over the cable adjuster.

5. Hook the spring into the hole in the center of the control bar bracket as shown in Figure 10.

6. Check the adjustment (refer to Checking the Rotor Control Cable on page 12).

Note: After extended use, the drive belt may wear and lose its proper belt tension. Improper belt tension causes the belt to slip and decreases the performance under a heavy load. Belt slippage may occur after 2 or 3 seasons of normal usage (10 to 15 operating hours). If the drive belt slips (continuously squeals) under a heavy load, increase the belt tension by positioning the spring end in the other hole in the control bar bracket as shown in Figure 10. Adjust the gap between the control bar bracket and the handle to 1/8 to 1/4 in. (3 to 6 mm).

Note: Using the incorrect hole in the control bar bracket can reduce the drive belt life. Occasional belt slippage (squealing) may occur in extremely wet conditions due to moisture in the drive system. To remove moisture, start the rotor and operate it without a load for 30 seconds. Once you remove the moisture, the drive belt should not slip.

PROTOTYPE

Adjusting the Traction Drive Cable

Check the traction drive cable for proper adjustment initially, after the first operating hour, and then annually thereafter.

Checking the Traction Drive Cable

1. Stop the engine and wait for all moving parts to stop.
2. Squeeze the control bar toward the handle.
3. Hold the control bar to the right side of the handle as shown in Figure 11.

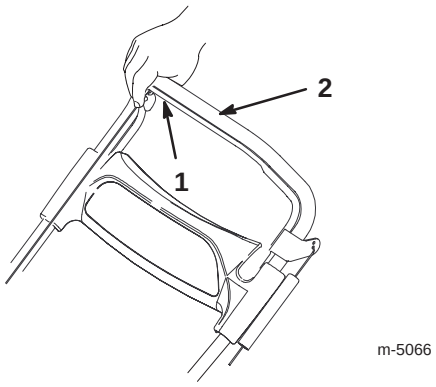

Figure 11

1. Right side of the control bar
2. Handle

4. Ensure that the distance between the pivot plate and the wheel frame is 0 to 1/8 in. (0 to 3 mm) as shown in Figure 12.

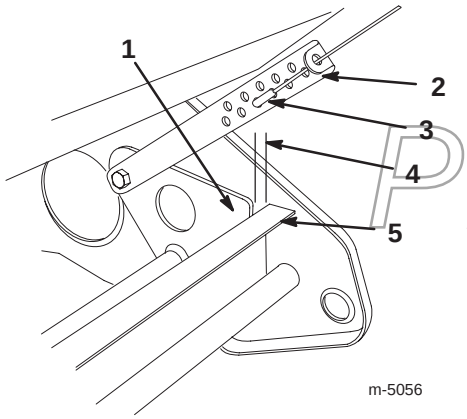

Figure 12

1. Pivot plate
2. Pivot cable adjuster
3. Z-fitting
4. 0 to 1/8 in. (0 to 3 mm) gap
5. Wheel frame

Important If the pivot plate touches the wheel frame before the control bar touches the handle, the cable is too tight. Adjust the cable to increase the gap between the pivot plate and the wheel frame, but ensure that the gap is not more than 1/8 in. (3 mm). Adjusting the cable correctly minimizes the effort needed to operate the control bar.

Adjusting the Traction Drive Cable

Unhook the Z-fitting from the pivot cable adjuster (Fig. 12), and position the Z-fitting in a different hole on the pivot cable adjuster to obtain the proper gap between the pivot plate and the wheel frame.

Note: Moving the Z-fitting to a hole closer to the ground decreases the gap between the pivot plate and the wheel frame; moving it to a hole farther from the ground increases the gap.

Note: The traction is most aggressive (the traction speed is fastest) when the rotor blades are new. If you want to reduce the aggressiveness of the traction, move the Z-fitting one hole farther from the ground. The gap between the pivot plate and the wheel frame will be about 1/4 in. (6 mm).

After the rotor blades have worn slightly, the traction won't feel as aggressive. To increase the traction, adjust the traction drive cable to attain the original gap between the pivot plate and the wheel frame of 0 to 1/8 in. (0 to 3 mm).

Replacing the Rotor Blades

Before each season, inspect the rotor blades for wear. When a rotor blade edge has worn down to the wear indicator hole (Fig. 13), replace all 3 rotor blades to ensure proper performance and to prevent damage to the underside of the snowthrower.

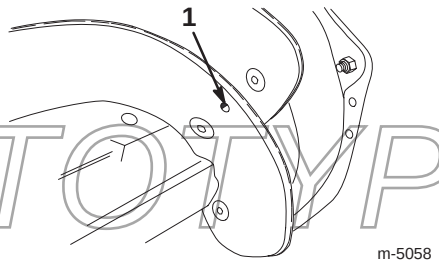

Figure 13

1. Rotor blade wear indicator hole

Important Replace the scraper whenever you replace the rotor blades. This ensures proper snowthrower operation and performance.

Note: The running time and the roughness of the driveway or the sidewalk determines the wear rate of the rotor blades.

PROTOTYPE

Note: You need a No. T27 torx driver to complete this procedure.

1. Stop the engine and wait for all moving parts to stop.
2. Remove the key from the switch.
3. Disconnect the wire from the spark plug. Refer to steps 3 through 5 of Replacing the Spark Plug on page 16.

Removing the Old Rotor Blades

Note: To make replacing the rotor blades easier, do not remove all the old rotor blades at once; this disassembles the rotor drum, making installing the new rotor blades more difficult. Replace the rotor blades one at a time to keep the rotor drum intact.

1. Remove the 4 torx screws and the 4 locknuts that secure the outer edges of the rotor blade to the rotor assembly (Fig. 14).

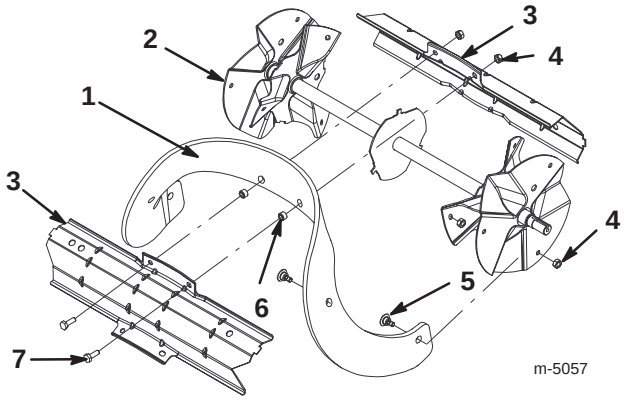

Figure 14

1. Rotor blade (3)
2. Rotor assembly
3. Rotor drum
4. Locknut (18)
5. Torx screw (12)
6. Spacer (6)
7. Hex-head cap screw (6)

2. Remove the 2 hex-head cap screws and 2 locknuts that secure the center of the rotor blade to the rotor drum (Fig. 14).
3. Slide the rotor blade out from between the rotor drum parts (Fig. 14).
4. Remove the 2 spacers from the old rotor blade and install them in the new rotor blade.

Installing the New Rotor Blades

1. Examine a new rotor blade edge for the difference in the thickness of the rubber layers (Fig. 15).

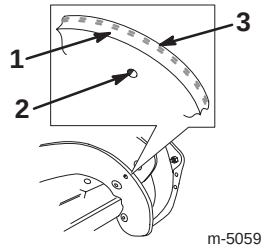

Figure 15

1. Thick rubber side
2. Wear indicator hole
3. Thin rubber side

Install the rotor blades with the thick rubber layer on the *inside* of the curve (Fig. 15). If you do not install the rotor blades properly, they will wear out more quickly.

2. Insert the new rotor blade between the rotor drum parts.
3. Secure the new rotor blade to the rotor drum parts with the 2 hex-head cap screws and 2 locknuts that you previously removed. Position the bolt heads on the thick rubber side of the rotor blade (Figs. 14 and 15).
4. Curve the new rotor blade and secure it with the remaining torx screws and locknuts, positioning the screw heads on the thick rubber side of the rotor blade (Figs. 14 and 15).
5. Tighten all screws and locknuts securely.
6. Replace the scraper. Refer to Replacing the Scraper on page 15.
7. Connect the wire to the spark plug.
8. Install the control panel.
9. Insert the key in the switch.

Note: The traction is most aggressive (the traction speed is fastest) when the rotor blades are new. If you want to reduce the aggressiveness of the traction, refer to Adjusting the Traction Drive Cable on page 14.

PROTOTYPE

Replacing the Scraper

Note: If the rotor blades are partially or completely worn, replace the rotor blades when you replace the scraper. This ensures proper snowthrower operation and performance.

1. Stop the engine and wait for all moving parts to stop.
2. Remove the key from the switch.
3. Disconnect the wire from the spark plug. Refer to steps 3 through 5 of Replacing the Spark Plug on page 16.
4. Tip the snowthrower backward onto its handle.

5. Remove the 6 bolts and locknuts that hold the scraper in place (Fig. 16).

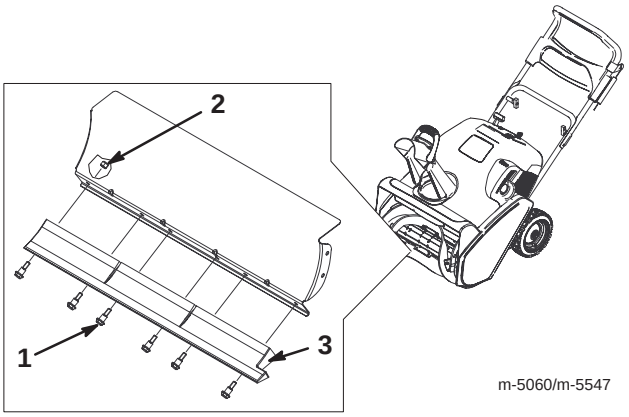

Figure 16

1. Carriage bolt (6)
2. Locknut (6)
3. Scraper

6. Remove the old scraper.
7. Install a new scraper to the housing using the bolts and the locknuts you previously removed.
8. Connect the wire to the spark plug.
9. Install the control panel.
10. Insert the key in the switch.

Replacing the Spark Plug

Use a *NGK BPMR4A* or equivalent spark plug. Install a new spark plug before each season.

1. Stop the engine and wait for all moving parts to stop.
2. Remove the key from the switch.
3. Remove the 2 mounting screws that secure the control panel to the housing (Fig. 17).

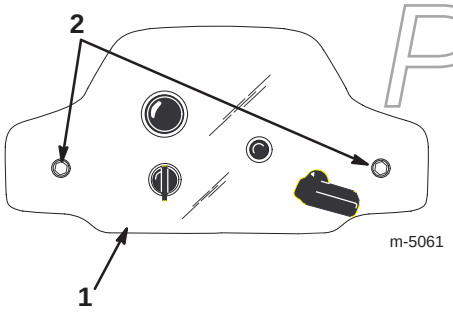

Figure 17

1. Control panel
2. Mounting screws (2)

4. Lift off the panel, allowing it to hang on the recoil rope.
5. Lift up the shroud and disconnect the wire from the spark plug (Fig. 18).

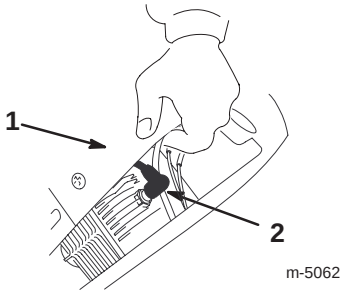

Figure 18

1. Shroud
2. Spark-plug wire

6. Clean any debris from around the base of the spark plug.
7. Remove the spark plug.
8. Examine the spark plug and replace it if it is cracked, fouled, dirty, or if the electrodes are worn.

Important Do not clean the electrodes because grit could enter the cylinder and damage the engine.

9. Set the gap between the electrodes on the new spark plug at 0.030 in. (0.76 mm) as shown in Figure 19.

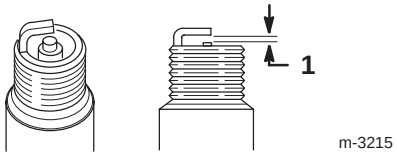

Figure 19

1. 0.030 in. (0.76 mm)

10. Install the spark plug by hand and then torque it to 15 ft-lb (20.4 N·m). If you do not have a torque wrench, tighten the plug firmly.
11. Connect the wire to the spark plug.
12. Install the control panel.
13. Insert the key in the switch.

PROTOTYPE

Replacing the Drive Belt

Inspect the drive belt before each season, and replace it if it is worn or damaged.

1. Stop the engine and wait for all moving parts to stop.
2. Remove the key from the switch.
3. Disconnect the wire from the spark plug. Refer to steps 3 through 5 of Replacing the Spark Plug on page 16.

4. Remove the 2 self-tapping screws, 3 cap screws, one washer, and 3 locknuts that secure the drive belt cover to the snowthrower frame (Fig. 20). Set the drive belt cover aside.

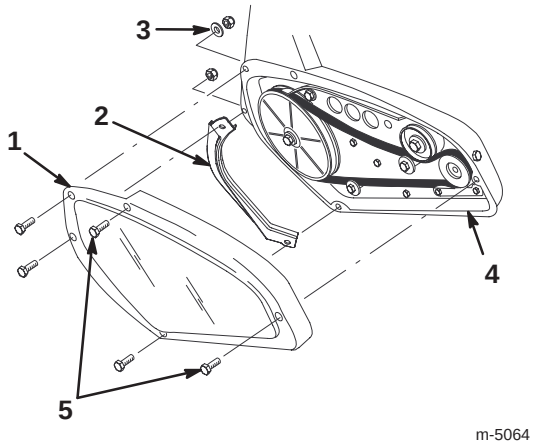

Figure 20

1. Drive belt cover
2. Left rotor guard
3. Washer
4. Snowthrower frame
5. Self-tapping screws

5. Remove the left rotor guard (Fig. 20) and save it for installation in step 10.

Important The left rotor guard acts as a water seal for the drive. Do not assemble the drive cover without installing this part or the drive belt will slip and fail.

6. Remove the old drive belt from the engine pulley and the idler pulley (Fig. 21).

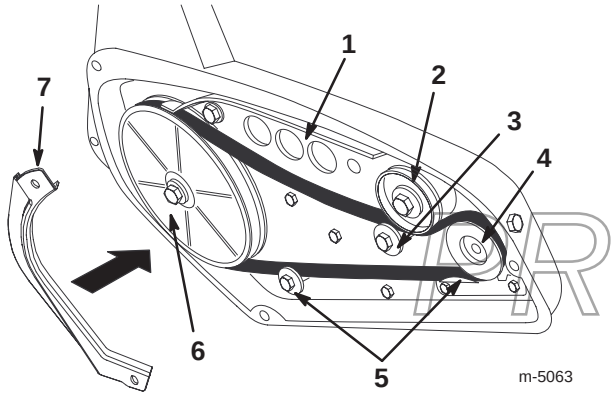

Figure 21

1. Brake arm assembly
2. Idler pulley
3. Roller
4. Engine pulley
5. Belt guides
6. Rotor pulley
7. Left rotor guard

7. Push down on the idler pulley and remove the old drive belt from the rotor pulley (Fig. 21).

8. Push down on the idler pulley and route a new drive belt around the rotor pulley (Fig. 21).

9. Release the idler pulley and route the new drive belt over the 2 belt guides, around the engine pulley, and between the idler pulley and the roller (Fig. 21).

Important The drive belt must be on top of the roller and the 2 belt guides as shown in Figure 21.

10. Install the left rotor guard.

11. Install the drive belt cover. Tighten the fasteners securely, but *do not overtighten*.

12. Connect the wire to the spark plug.

13. Install the control panel.

14. Insert the key in the switch.

Checking the Tire Pressure

Inflate both tires to between 15 and 20 psi (103 and 137 kPa).

Emptying the Fuel Tank

1. Stop the engine and wait for all moving parts to stop.

2. Remove the key from the switch.

Danger

Gasoline is highly flammable; it can ignite and cause serious personal injury.

- **Drain gasoline outdoors.**
- **Drain gasoline from a cold engine only.**
- **Wipe up any gasoline that may have spilled.**
- **Do not drain gasoline near any open flame or where gasoline fumes may be ignited by a spark.**
- ***Do not smoke* a cigar, a cigarette, or a pipe when handling gasoline.**

PROTOTYPE

3. Remove the fuel tank cap and use a hand pump to syphon the fuel into an approved fuel container.

4. Start the engine and allow it to run until it stops. Repeat this step 2 more times to ensure that the fuel tank and the carburetor are empty.

Storage

Important Store the snowthrower in its operating position and on its wheels. Storing the snowthrower on its front housing may cause hard starting.

Warning

Gasoline fumes are highly flammable, explosive, and dangerous if inhaled. If you store the product in an area with an open flame, the gasoline fumes may ignite and cause an explosion.

Do not store the snowthrower in a house (living area), basement, or any other area where ignition sources may be present, such as hot water and space heaters, clothes dryers, furnaces, and other like appliances.

Preparing the Fuel System

1. Add a fuel stabilizer/conditioner to the fuel in the fuel tank as directed.

Note: If you use *Toro 50:1 2-Cycle Oil (Fuel Stabilizer Added)*, you do not need to add a fuel stabilizer/conditioner.

2. Run the engine for 5 minutes to distribute the conditioned fuel through the fuel system.
3. Stop the engine and allow it to cool.
4. Use a hand pump to syphon the fuel from the fuel tank into an approved fuel container, or run the engine until it stops.
5. Start the engine and run it until it stops.
6. Choke or prime the engine, start it a third time, and run the engine until it will not start.
7. Dispose of unused fuel properly. Recycle it according to local codes, or use it in your automobile.

Note: Do not store stabilized fuel for more than 90 days.

Preparing the Engine

Follow this procedure to prevent cylinder bore corrosion by closing both the intake and exhaust ports of the engine.

1. Slowly pull the recoil starter until you feel resistance due to compression pressure, then stop.
2. Release the starter tension gradually by allowing the rope to go back slowly to prevent the engine from reversing due to compression pressure.

Preparing the Snowthrower

1. Tighten all loose screws, bolts, and locknuts. Repair or replace any damaged parts.
2. Clean the snowthrower thoroughly.
3. Cover the snowthrower and store it in a clean, dry place out of the reach of children. Allow the engine to cool before storing it in any enclosure.

Folding the Handle

1. Loosen the knobs and pull out the handle locks until the upper handle rotates freely (Fig. 3).
2. Position the upper handle as shown in Figure 22.

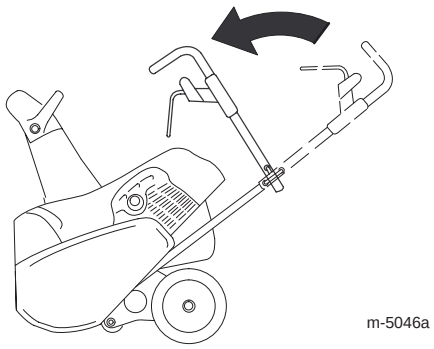

Figure 22

3. Fully insert the handle locks (Fig. 3).
4. Tighten the knobs until they are snug.

Note: To unfold the handle, refer to Unfolding the Handle on page 7.

PROTOTYPE

Troubleshooting

Toro designed and built your snowthrower for trouble-free operation. Check the following components and items carefully, and refer to Maintenance on page 12 for more information. If a problem continues, contact an Authorized Service Dealer.

Problem	Possible Causes	Corrective Action
Electric starter does not turn (electric-start models only)	1. The power cord is disconnected at the outlet or the snowthrower.	1. Connect the power cord to the outlet and/or the snowthrower.
	2. The power cord is worn, corroded, or damaged.	2. Replace the power cord.
	3. The power outlet is not energized.	3. Have a qualified electrician energize the power outlet.
Engine does not start or starts hard	1. The key is not in the ignition or is in the *Off* position.	1. Insert the key into the ignition and turn it to the *On* position.
	2. The choke is in the *Off* position and the primer has not been pressed.	2. Move the choke to the *On* position and press the primer 2 times.
	3. The fuel tank is empty or the fuel system contains stale fuel.	3. Drain and fill the fuel tank with a fresh gasoline-and-oil mixture (not more than 30 days old). If the problem persists, contact an Authorized Service Dealer.
	4. The engine is flooded.	4. Move the choke to the *Off* position and pull the rope several times to clear out the rich fuel-and-air mixture from the engine.
	5. The spark-plug wire is loose or disconnected.	5. Connect the wire to the spark plug.
	6. The spark plug is pitted, fouled, or the gap is incorrect.	6. Check the spark plug and adjust the gap if necessary. Replace the spark plug if it is pitted, fouled, or cracked.
	7. The fuel cap vent is restricted.	7. Remove the vent restriction or replace the fuel cap.
Engine runs rough	1. The choke is in the *On* position.	1. Move the choke to the *Off* position.
	2. The fuel system contains stale fuel.	2. Drain and fill the fuel tank with a fresh gasoline-and-oil mixture (not more than 30 days old). If the problem persists, contact an Authorized Service Dealer.
	3. The spark-plug wire is loose.	3. Connect the wire to the spark plug.
	4. The spark plug is pitted, fouled, or the gap is incorrect.	4. Check the spark plug and adjust the gap if necessary. Replace the spark plug if it is pitted, fouled, or cracked.

PROTOTYPE

Problem	Possible Causes	Corrective Action
Engine runs, but the snowthrower discharges snow poorly or not at all	1. You are walking too fast or too slow.	1. Change your walking speed.
	2. You are trying to remove too much snow per swath.	2. Reduce the amount of snow removed per swath.
	3. You are trying to remove extremely heavy or wet snow.	3. Don't overload the snowthrower with extremely heavy or wet snow; reduce the amount of snow removed per swath.
	4. The discharge chute is plugged.	4. Stop the engine, wait for all moving parts to stop, and use a stick to remove the snow from the discharge chute.
	5. The rotor control cable is improperly adjusted or broken.	5. Adjust or replace the rotor control cable.
	6. The drive belt is loose or is off the pulley.	6. Inspect the drive belt, and install or replace it.
	7. The drive belt is worn or broken.	7. Replace the drive belt.
	8. The rotor blades are worn.	8. Replace the rotor blades and the scraper.
Snowthrower does not properly clear snow off the surface	1. The snow on the surface to be cleared is compacted down.	1. Throw the snow off the surface before it becomes compacted.
	2. The front of the snowthrower is not down.	2. Check the traction drive cable, and adjust or replace it.
	3. The scraper is excessively worn.	3. Replace the scraper.
	4. The rotor blades are excessively worn.	4. Replace the rotor blades and the scraper.
Snowthrower does not self-propel	1. The front of the snowthrower is not down.	1. Check the traction drive cable, and adjust or replace it.
	2. The rotor blades are excessively worn.	2. Replace the rotor blades and the scraper.
	3. The snow is too deep or the surface is too slippery.	3. Push forward on the handle, but allow the snowthrower to work at its own pace.
Rotor blades do not stop properly	1. The rotor control cable is improperly adjusted.	1. Adjust the rotor control cable.

PROTOTYPE