Form No. 3448-144 Rev A

TORO®

Count on it.

Parts Catalog

# Reelmaster® 5510

## Traction Unit

**Model No. 03676—Serial No. 409300000 and Up**

Register at www.Toro.com.
Original Instructions (EN)

CE

*3448-144* A

# Ordering Replacement Parts

To order replacement parts, please supply the part number, the quantity, and the description of each part desired.

### Understanding Reference Numbers

Each identified part in an illustration has a reference number. The reference number for a part also appears in the parts list, along with other information about the part.

This catalog uses two special reference number formats, one to indicate parts in a service assembly and another to indicate the quantity of a given part in an illustration.

### Service Assembly Reference Numbers

Parts in service assemblies have reference numbers in the form a:b. The a represents the reference number of the entire service assembly and the b represents a sequential number unique to each part within the service assembly.

For example, a wheel assembly might be identified by reference number 6, the tire by 6:1, the valve by 6:2, and the wheel by 6:3. When you order the assembly identified by reference number 6, you receive all parts identified by reference numbers 6:1,6:2, and 6:3. However, you may also order any part individually. Reference numbers of this type appear in illustration and in parts lists.

### Reference Numbers Indicating Quantity

In an illustration, if a reference number indicates more than one part, the reference number has the form nX y. The n represents the quantity of the part, the X is the multiplication symbol, and the y represents the reference number.

For example, in an illustration, the reference number 2X 37 means that two of the parts identified by reference number 37 are indicated.

# Contents


Frame Assembly . . . 5
Operator Platform and Front Shroud Assembly . . . 6
Pedal Assembly . . . 7
Steering Assembly . . . 9
Steering Tilt Column Assembly No. 106-3622 . . . 10
Steering Valve Assembly No. 106-3621 . . . 11
Console and Control Arm Assembly . . . 12
Joystick Bracket Assembly No. 120-5280 . . . 14
Front Axle Assembly . . . 15
LH Brake Assembly No. 139-5952 . . . 16
RH Brake Assembly No. 139-5951 . . . 17
Rear Axle Assembly . . . 18
Tie Rod Assembly No. 110-5334-03 . . . 19
Hub and Spindle Assembly No. 117-8961 . . . 20
No. 1, 4 and 5 Lift Arm Assembly . . . 21
No. 2 and 3 Lift Arm Assembly . . . 23
Seat and Control Arm Wiring Harness Assembly . . . 24
Main Wiring Harness Assembly . . . 25
Battery Mounting Assembly . . . 26
Gear Pump Assembly . . . 27
Gear Pump Assembly No. 107-4547 . . . 28
Seat Base Assembly . . . 29
Hood Assembly . . . 30
Cooling System Assembly . . . 31
Hydraulic Tank Assembly . . . 33
Fuel System Assembly . . . 34
Seat Mounting Assembly . . . 36
Seat Assembly No. 139-2700 . . . 37
Mechanical Seat Suspension Assembly No. 110-8851 . . . 38
Traction Pump Mounting Assembly . . . 39
Hydraulic Pump Assembly No. 119-6972 . . . 40
Traction Hydraulic Assembly . . . 42
Hydraulic Motor Assembly No. 133-2935 (CCW) . . . 43
Hydraulic Motor Assembly No. 133-2934 (CW) . . . 44
No. 1, 4 and 5 Reel Drive Hydraulic Assembly . . . 45
Hydraulic Motor Assembly No. 120-6272 . . . 47
Manifold Assembly No. 121-5628 . . . 48
No. 2 and 3 Reel Drive Hydraulic Assembly . . . 49
No. 1, 4 and 5 Lift Arm Hydraulic Assembly . . . 51
Hydraulic Cylinder Assembly No. 138-6999 . . . 52
Hydraulic Cylinder Assembly No. 119-6987 . . . 53
Hydraulic Manifold Block Assembly No. 105-7577 . . . 54
Rear Lift Hydraulic Assembly . . . 55
Steering Hydraulic Assembly . . . 56
Hydraulic Cylinder Assembly No. 110-9035 . . . 58
Engine, Muffler and Air Cleaner Assembly . . . 60
Air Cleaner Assembly No. 106-5277 . . . 62
Driveshaft Assembly No. 108-1641 . . . 63
Crankcase Assembly . . . 64
Oil Pan Assembly . . . 65
Cylinder Head Assembly . . . 66
Gear Case Assembly . . . 67
Cylinder Head Cover Assembly . . . 68
Dipstick and Guide Assembly . . . 69



**© 2021—The Toro® Company**


**8111 Lyndale Avenue South**
**Bloomington, MN 55420**





**Contact us at www.Toro.com.**
**Printed in the USA.**


**All Rights Reserved**

# Contents (continued)

Main Bearing Case Assembly . . . . . 70
Camshaft and Idle Gear Assembly . . . . . 71
Piston and Crankshaft Assembly . . . . . 72
Flywheel Assembly . . . . . 73
Fuel Camshaft and Governor Shaft Assembly . . . . . 74
Idle Apparatus Assembly . . . . . 75
Injection Pump Assembly . . . . . 76
Governor Assembly . . . . . 77
Speed Control Plate Assembly . . . . . 78
Nozzle Holder and Glow Plug Assembly . . . . . 79
Nozzle Holder Component Assembly . . . . . 80
Alternator and Pulley Assembly . . . . . 81
Alternator Components Assembly . . . . . 82
Starter Assembly . . . . . 83
Starter Component Part Assembly No. 111-7496 . . . . . 84
Thermostat Assembly . . . . . 85
Water Pump Assembly . . . . . 86
Valve and Rocker Arm Assembly . . . . . 87
Intake and Exhaust Manifold Assembly . . . . . 88
Attachments and Accessories . . . . . 89

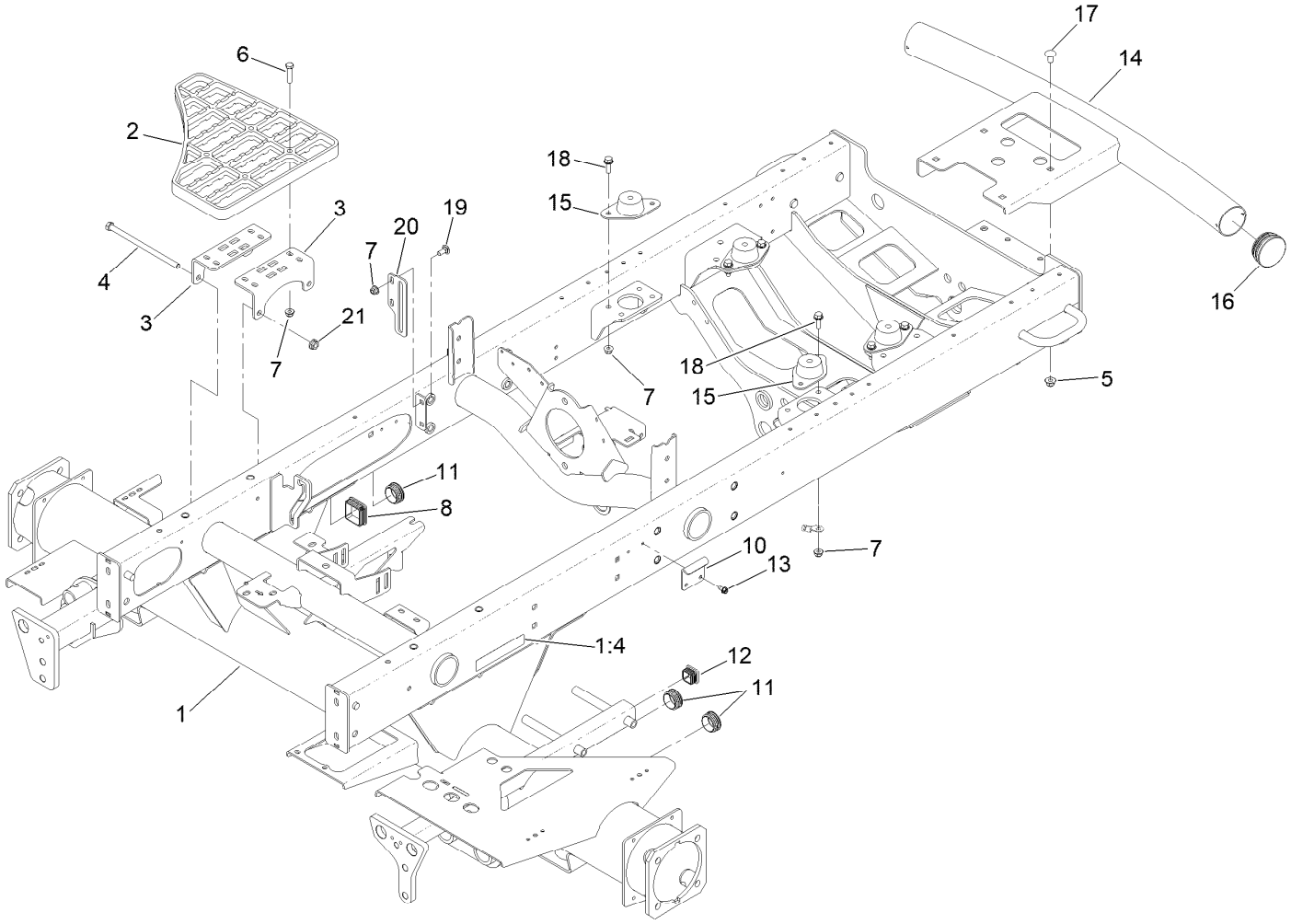


# Frame Assembly

| Ref. | Part Number | Qty. | Description |
|---|---|---|---|
| 1 | 120-3803 | 1 | Frame ASM |
| 1:4 | 93-6689 | 2 | Decal-No Riders |
| 2 | 110-9041 | 2 | Step-Aluminum |
| 3 | 127-2697-01 | 4 | Bracket-Step |
| 4 | 323-36 | 4 | Screw-HH |
| 5 | 104-8301 | 4 | Nut-HF, NI |
| 6 | 322-17 | 8 | Screw-HH |
| 7 | 104-8300 | 18 | Nut-HF, NI |
| 8 | 95-9495 | 1 | Cap |
| 10 | 110-8972 | 1 | Hook-Latch |
| 11 | 110-9012 | 5 | Caplug |

| Ref. | Part Number | Qty. | Description |
|---|---|---|---|
| 12 | 110-9013 | 1 | Caplug |
| 13 | 32104-17 | 2 | Screw-HWH |
| 14 | 110-8951-03 | 1 | Bumper |
| 15 | 120-6274 | 4 | Mount-Engine |
| 16 | 2410-42 | 2 | Cap-End |
| 17 | 3231-21 | 4 | Screw-CARR |
| 18 | 3234-29 | 8 | Screw-HHF |
| 19 | 3230-1 | 2 | Bolt-CARR |
| 20 | 108-7584-01 | 1 | Plate-Guide, Rod |
| 21 | 32128-21 | 4 | Nut-HF Lock |

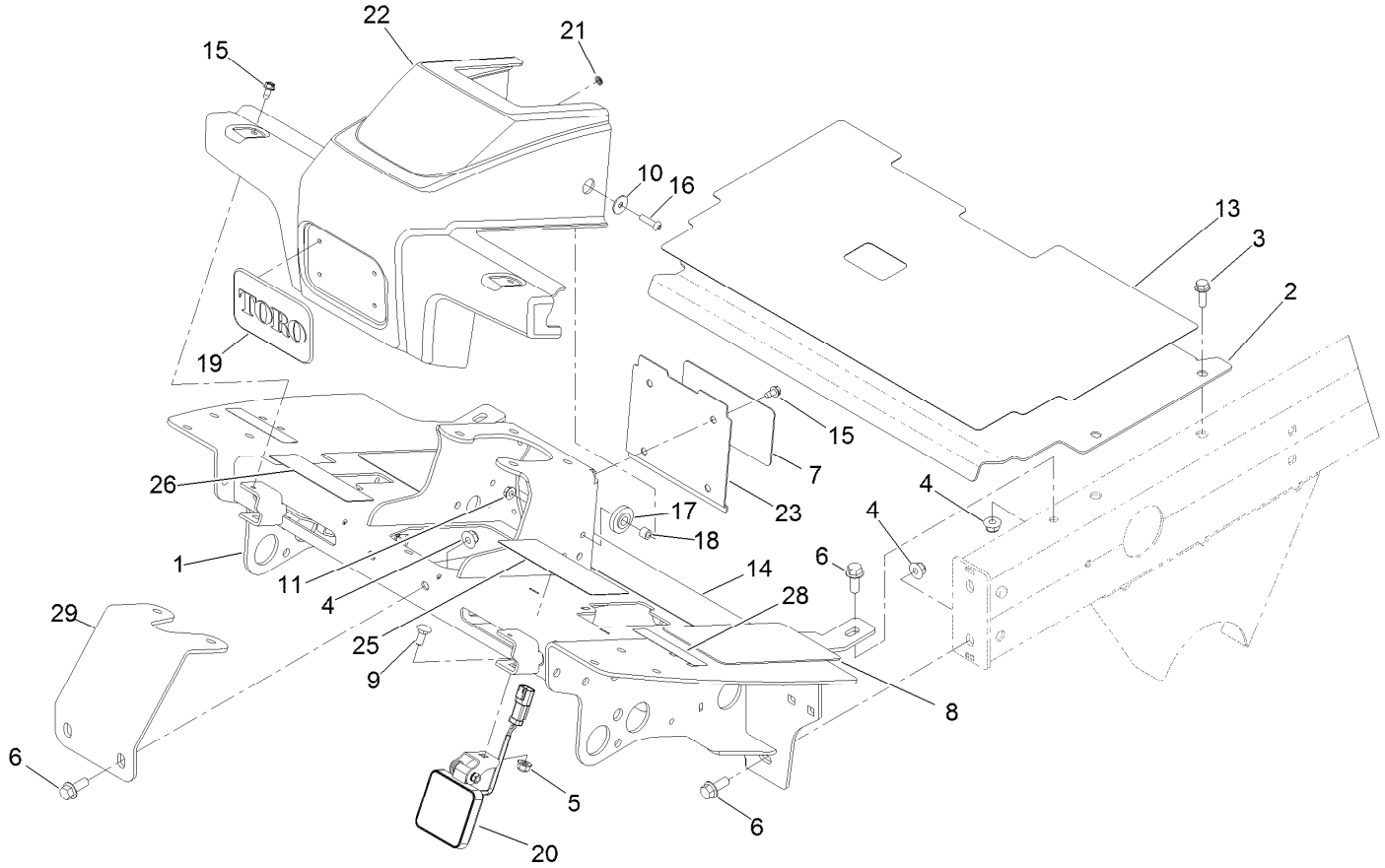


# Operator Platform and Front Shroud Assembly

| Ref. | Part Number | Qty. | Description |
|---|---|---|---|
| 1 | 127-2310-01 | 1 | Platform ASM |
| 2 | 115-8064-01 | 1 | Plate-Floor |
| 3 | 3234-17 | 4 | Screw-HHF |
| 4 | 104-8301 | 6 | Nut-HF, NI |
| 5 | 104-8300 | 2 | Nut-HF, NI |
| 6 | 3234-11 | 6 | Screw-HHF |
| 7 | 110-0986 | 1 | Decal-Plate, Cover |
| 8 | 125-2910 | 2 | Tread-Floor, Side |
| 9 | 3230-1 | 2 | Bolt-CARR |
| 10 | 87-6630 | 2 | Washer-Plain |
| 11 | 32128-33 | 2 | Nut-HF |
| 13 | 125-2911 | 1 | Tread-Panel, Service |
| 14 | 125-2909 | 1 | Tread-Floorboard |
| 15 | 32104-17 | 6 | Screw-HWH |

| Ref. | Part Number | Qty. | Description |
|---|---|---|---|
| 16 | 106-9518 | 2 | Screw-PRH |
| 17 | 240-11 | 2 | Bushing-Flange |
| 18 | 66-8010 | 2 | Spacer |
| 19 | 93-6028 | 1 | Plate-Logo |
| 20 | 140-6990 | 2 | Light-Work, LED |
| 21 | 138-6996 | 4 | Nut-Push |
| 22 | 110-0944 | 1 | Shroud-Platform |
| 23 | 110-0947-03 | 1 | Plate-Cover |
| 25 | 133-2930 | 1 | Decal-Danger |
| 25 | 133-2931 | 1 | Decal-Danger (CE) |
| 26 | 110-8921 | 1 | Decal-Speed, Mow |
| 28 | 133-8062 | 1 | Decal-Arrestor, Spark |
| 29 | 110-8876-0P | 1 | Brace-Column |

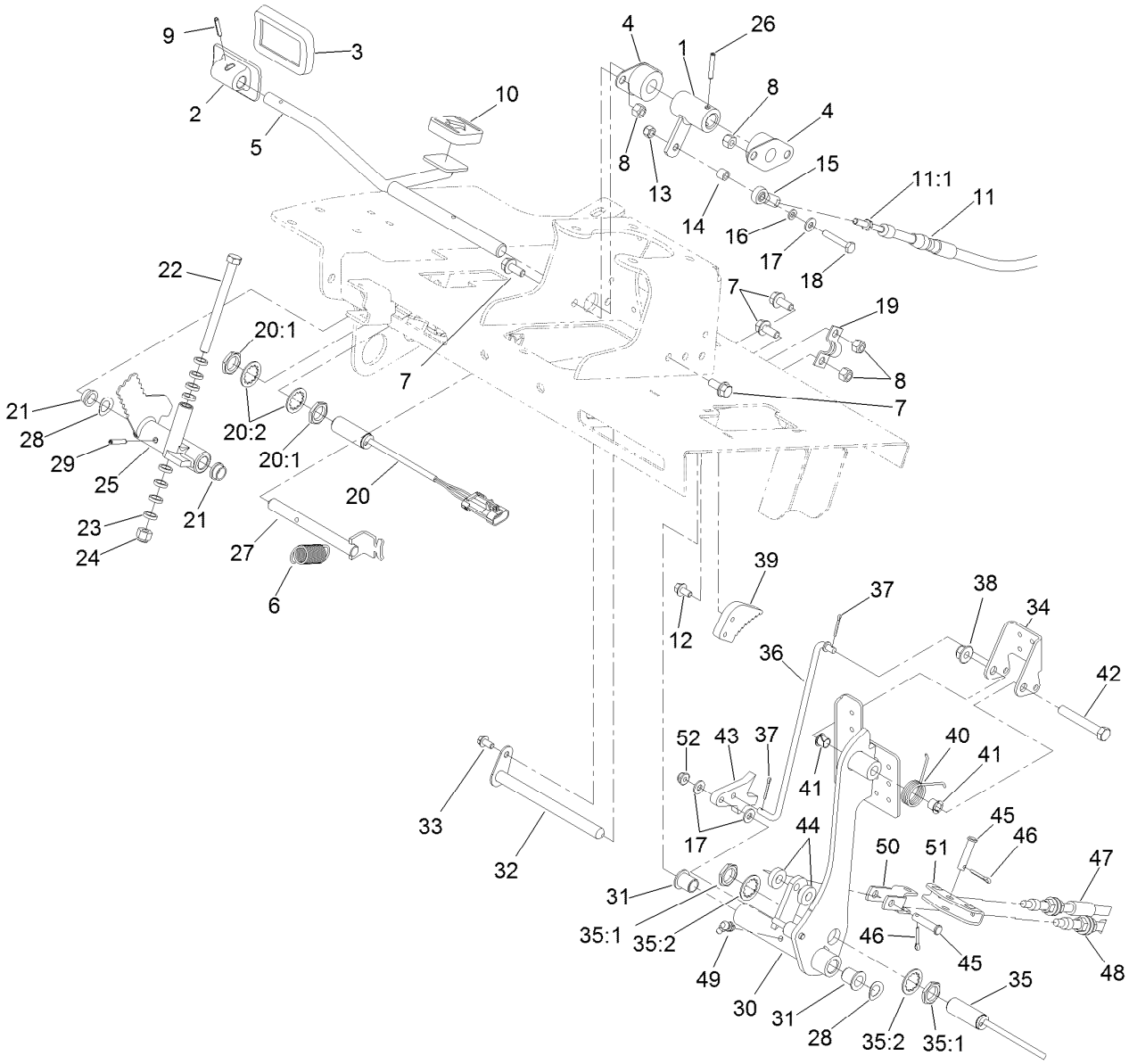


# Pedal Assembly

| Ref. | Part Number | Qty. | Description |
|---|---|---|---|
| 1 | 117-5199 | 1 | Hub-Pedal, Traction |
| 2 | 117-9507 | 1 | Pedal-Accelerator |
| 3 | 74-9100 | 1 | Pad-Pedal, Forward |
| 4 | 256-236 | 2 | Bearing-Mount, Flange |
| 5 | 106-3840 | 1 | Pedal-Traction |
| 6 | 92-7305 | 1 | Spring-Extension |
| 7 | 3234-5 | 6 | Screw-HHF |
| 8 | 3296-29 | 6 | Nut-Lock, NI |
| 9 | 32121-45 | 1 | Pin-Spring |
| 10 | 74-9110 | 1 | Pad-Pedal, Reverse |
| 11 | 127-2721 | 1 | Cable-Traction |
| 11:1 | 3220-1 | 2 | Nut-Jam |
| 12 | 3234-13 | 2 | Screw-HHF |
| 13 | 3296-42 | 1 | Nut-Lock, NI |
| 14 | 66-8010 | 1 | Spacer |
| 15 | 2411-41 | 1 | Rod End-Ball Joint |
| 16 | 33093-00 | 1 | Washer-Flat |
| 17 | 3256-22 | 3 | Washer-Flat |
| 18 | 321-9 | 1 | Screw-HH |
| 19 | 93-2092 | 1 | Clamp-Cable |
| 20 | 115-0282 | 1 | Proximity Sensor ASM |

| Ref. | Part Number | Qty. | Description |
|---|---|---|---|
| 20:1 | 117-3207 | 2 | Nut-Hex |
| 20:2 | 117-3208 | 2 | Washer-Lock, Internal Tooth |
| 21 | 256-156 | 2 | Bushing-Flange |
| 22 | 323-17 | 1 | Screw-HH |
| 23 | 62-4420 | 8 | Washer |
| 24 | 3296-39 | 1 | Nut-Lock, NI |
| 25 | 117-8066 | 1 | Mow-Stop |
| 26 | 32121-6 | 1 | Pin-Roll, Slotted |
| 27 | 106-3731 | 1 | Rod-Pivot |
| 28 | 110-8982 | 2 | Washer-Spring |
| 29 | 32121-16 | 1 | Pin-Spring |
| 30 | 115-0120-03 | 1 | Pedal-Brake |
| 31 | 125-8775 | 2 | Bushing-Flange |
| 32 | 104-7179 | 1 | Pivot-Pedal |
| 33 | 32144-4 | 1 | Screw-HWH |
| 34 | 99-7963-03 | 1 | Pedal-Park |
| 35 | 115-5300 | 1 | Proximity Switch ASM |
| 35:1 | 117-3207 | 2 | Nut-Hex |
| 35:2 | 117-3208 | 2 | Washer-Lock, Internal Tooth |
| 36 | 115-0129 | 1 | Rod-Pawl, Brake |
| 37 | 3272-6 | 2 | Pin-Cotter |

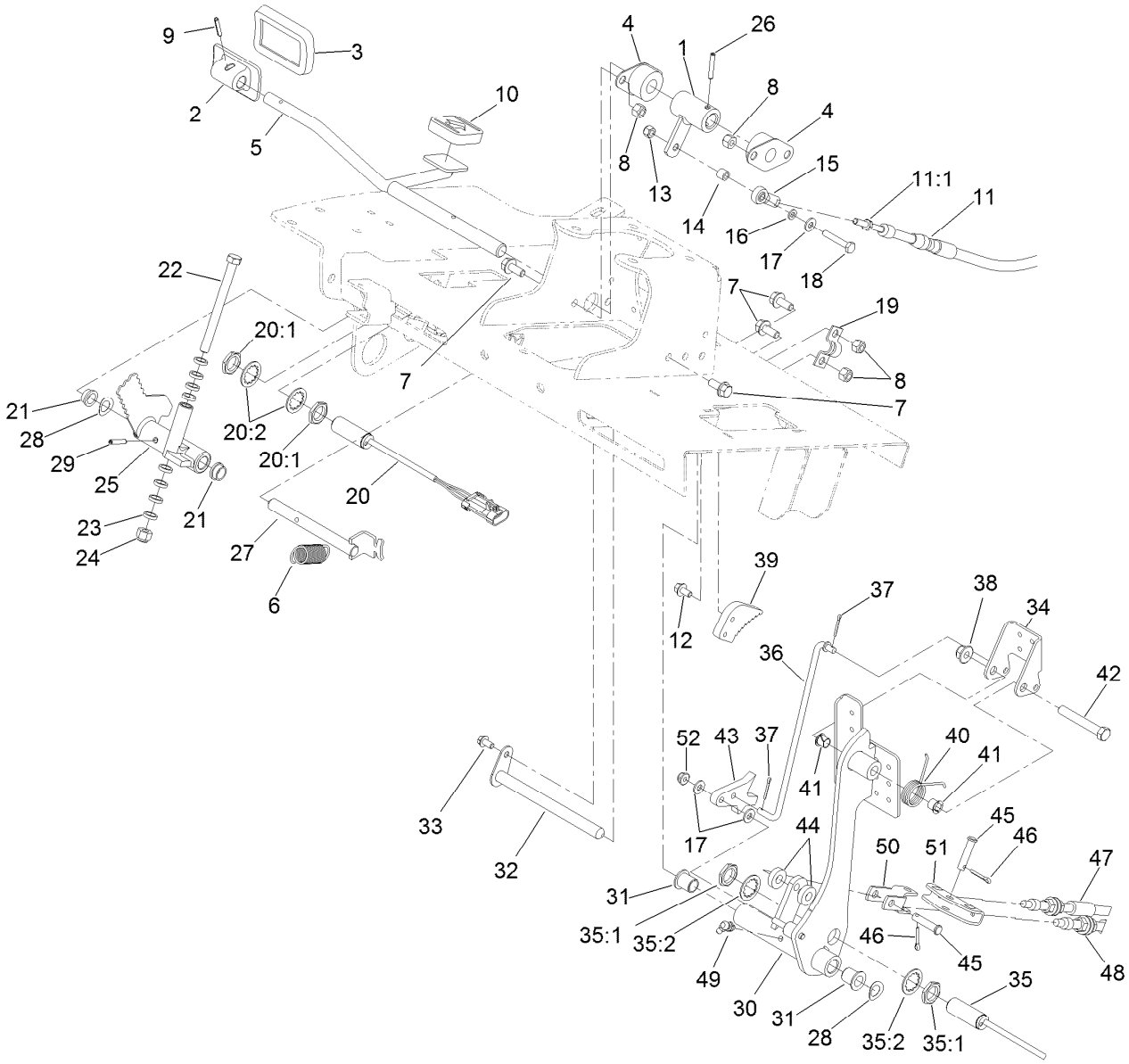


# Pedal Assembly (continued)

| Ref. | Part Number | Qty. | Description |
|---|---|---|---|
| 38 | 104-8301 | 1 | Nut-HF, NI |
| 39 | 99-7214 | 1 | Pawl-Brake |
| 40 | 99-7140 | 1 | Spring-Torsion |
| 41 | 52-2891 | 2 | Bushing-Flanged, Nylon |
| 42 | 323-12 | 1 | Screw-HH |
| 43 | 117-0238 | 1 | Detent |
| 44 | 5-0652 | 2 | Spacer |
| 45 | 283-14 | 2 | Pin-Clevis |

| Ref. | Part Number | Qty. | Description |
|---|---|---|---|
| 46 | 3272-10 | 2 | Pin-Cotter |
| 47 | 117-0106 | 1 | Cable-Brake, RH |
| 48 | 117-0107 | 1 | Cable-Brake, LH |
| 49 | 302-60 | 1 | Fitting-Grease |
| 50 | 115-8060 | 1 | Clevis-Double |
| 51 | 115-8059 | 1 | Yoke-Cable |
| 52 | 104-7201 | 1 | Nut-HF, NI |

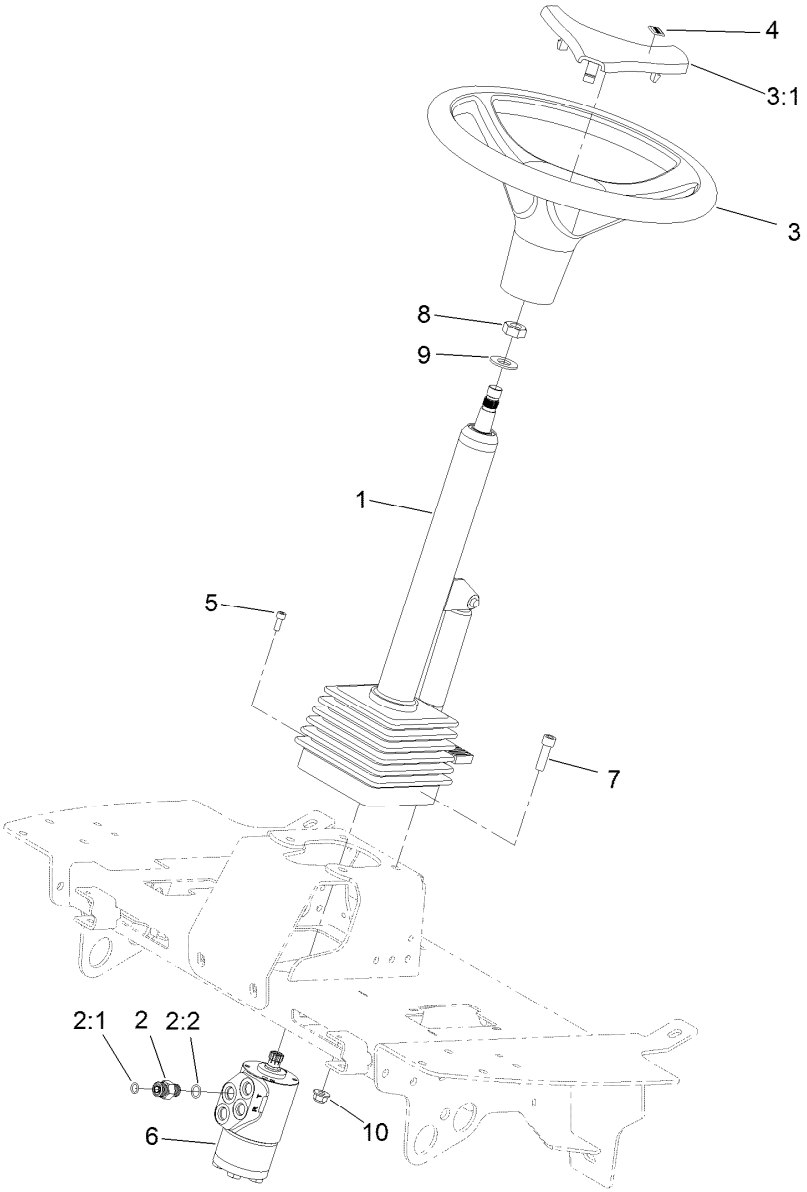


# Steering Assembly

| *Ref.* | *Part Number* | *Qty.* | *Description* |
|---|---|---|---|
| 1 | 106-3622 | 1 | Steering Tilt Column ASM |
| 2 | 340-2 | 4 | Fitting-Straight |
| 2:1 | 237-22 | 1 | O-Ring |
| 2:2 | 237-42 | 1 | O-Ring |
| 3 | 98-1471 | 1 | Wheel-Steering |
| 3:1 | 98-1468 | 1 | Cover-Wheel, Steering |
| 4 | 98-1459 | 1 | Decal |
| 5 | 105-2409 | 4 | Screw-HSH |
| 6 | 106-3621 | 1 | Steering Valve ASM |
| 7 | 3274-1 | 4 | Screw-HSH |
| 8 | 3296-33 | 1 | Nut-Lock, NI |
| 9 | 3256-27 | 1 | Washer-Flat |
| 10 | 104-8301 | 4 | Nut-HF, NI |

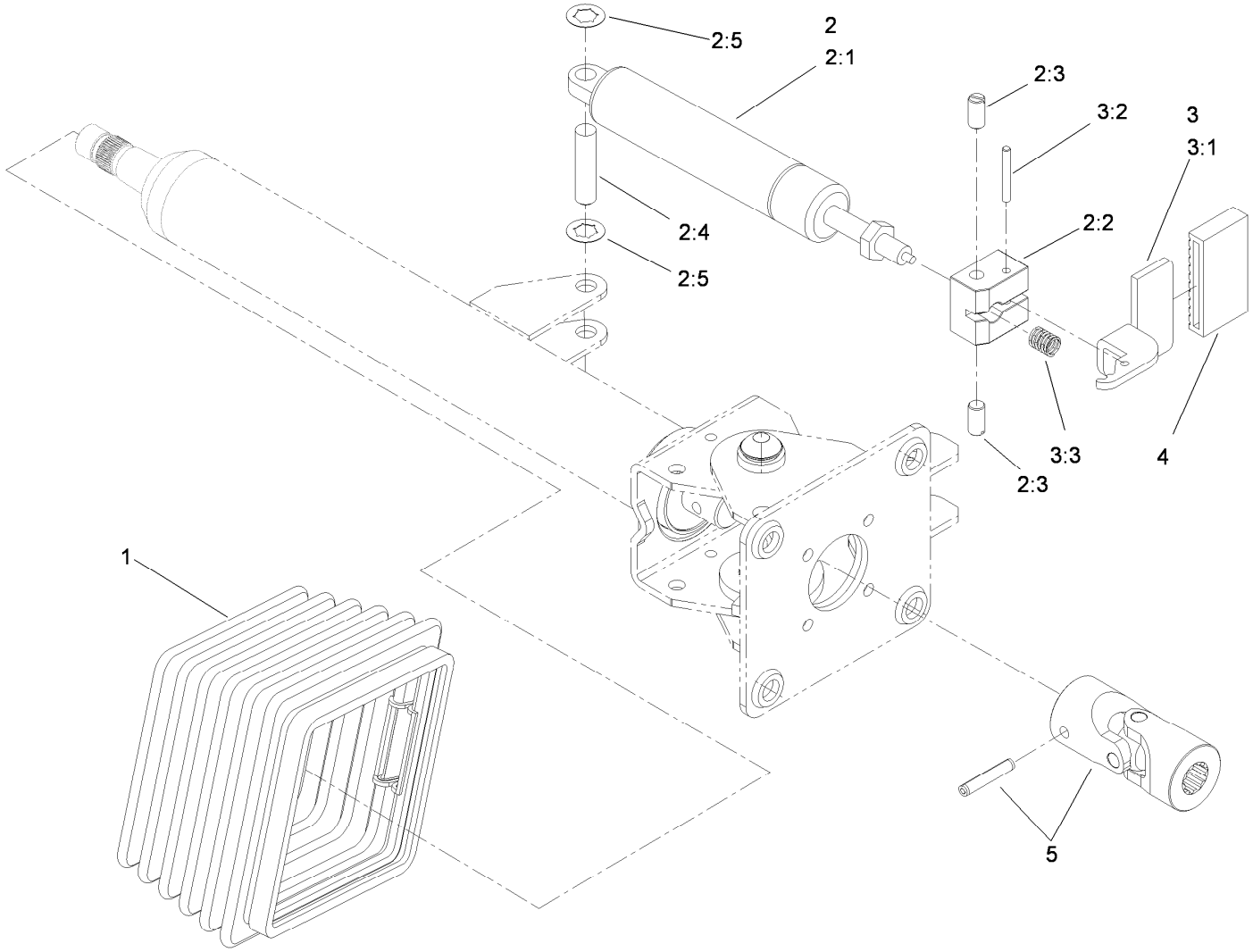


# Steering Tilt Column Assembly No. 106-3622

| *Ref.* | *Part Number* | *Qty.* | *Description* |
|---|---|---|---|
| 1 | 110-6462 | 1 | Bellows-Rubber |
| 2 | 110-6463 | 1 | Cylinder Service Kit |
| 2:1 | | 1 | Cylinder-Gas ● |
| 2:2 | | 1 | Block-Pedal ● |
| 2:3 | | 2 | Bolt ● |
| 2:4 | | 1 | Pin ● |
| 2:5 | | 2 | Washer-Lock ● |
| 3 | 110-6464 | 1 | Pedal Service Kit |
| 3:1 | | 1 | Pedal ● |
| 3:2 | | 1 | Pin ● |
| 3:3 | | 1 | Spring ● |
| 4 | 110-6465 | 1 | Cover-Pedal |
| 5 | 120-6256 | 1 | Universal Joint Kit |

● Not serviced separately

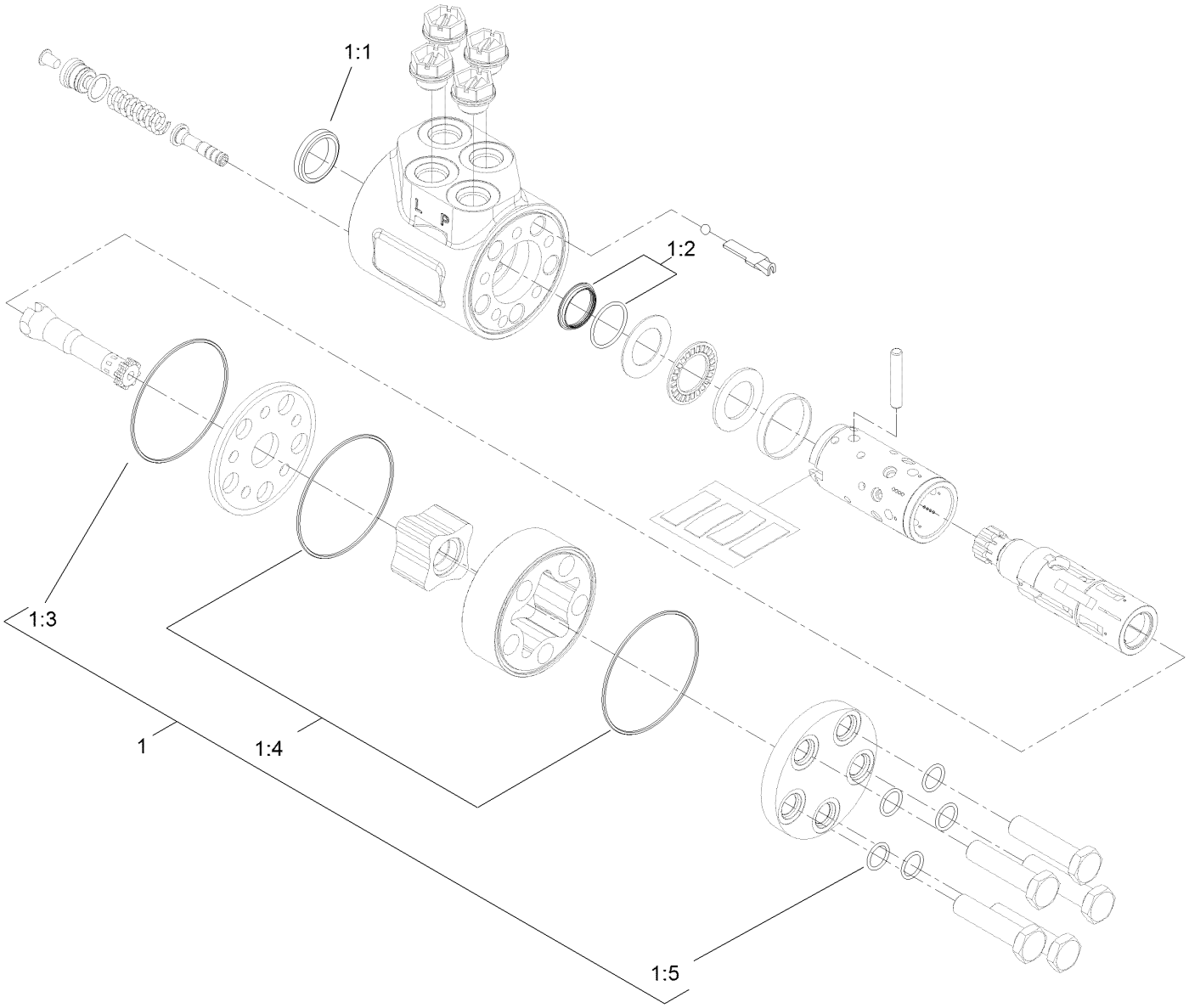


# Steering Valve Assembly No. 106-3621

| *Ref.* | *Part Number* | *Qty.* | *Description* |
|---|---|---|---|
| 1 | 106-6716 | 1 | Seal Kit |
| 1:1 | | 1 | Ring-Seal, Dust ● |
| 1:2 | | 1 | Seal-Shaft ● |
| 1:3 | | 1 | O-Ring ● |
| 1:4 | | 2 | O-Ring ● |
| 1:5 | | 5 | O-Ring ● |

● Not serviced separately

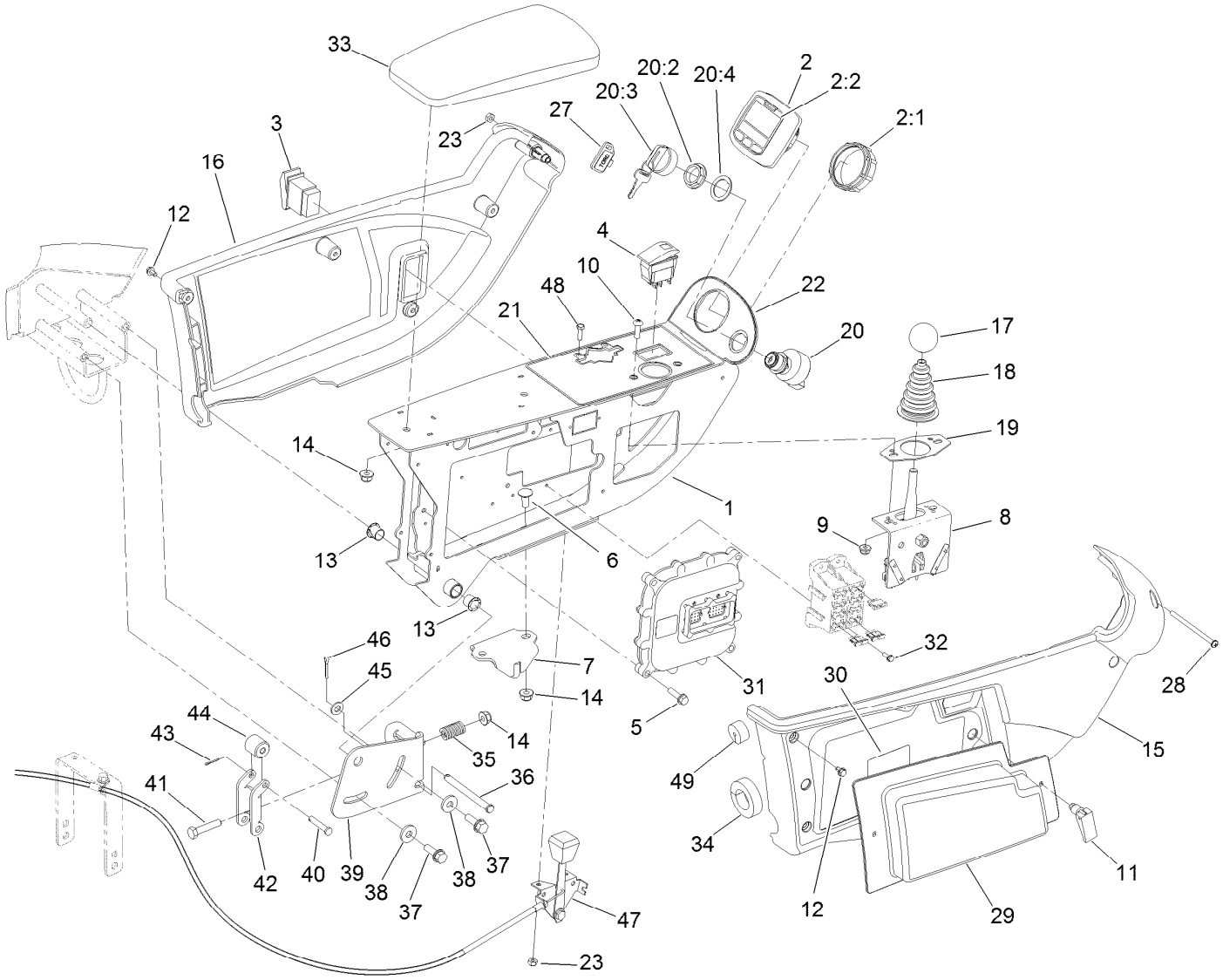


# Console and Control Arm Assembly

| Ref. | Part Number | Qty. | Description |
|---|---|---|---|
| 1 | 120-3801-03 | 1 | Frame-Arm, Control |
| 2 | 120-6310 | 1 | LCD Display ASM |
| 2:1 | 120-4630 | 1 | Nut-Display |
| 2:2 | 120-6311 | 1 | Decal-Display |
| 3 | 95-8999 | 1 | Switch |
| 4 | 105-4232 | 1 | Switch |
| 5 | 32144-86 | 4 | Screw-HWHTF |
| 6 | 3230-23 | 2 | Bolt-CARR |
| 7 | 125-1938 | 1 | Latch |
| 8 | 120-5280 | 1 | Bracket-Joystick |
| 9 | 104-7201 | 2 | Nut-HF, NI |
| 10 | 3258-166 | 2 | Screw-PRH |
| 11 | 74-5950 | 2 | Latch-Swell |
| 12 | 104-2065 | 10 | Screw-HWH |
| 13 | 256-257 | 2 | Bushing-Nyliner |
| 14 | 104-8300 | 5 | Nut-HF, NI |
| 15 | 108-7605 | 1 | Cover-RH |
| 16 | 108-7604 | 1 | Cover-LH |
| 17 | 233-42 | 1 | Knob |
| 18 | 93-5961 | 1 | Boot-Lever |
| 19 | 112-9181 | 1 | Plate-Boot |

| Ref. | Part Number | Qty. | Description |
|---|---|---|---|
| 20 | 106-5269 | 1 | Ignition Switch ASM |
| 20:2 | 108-8660 | 1 | Nut-Mounting |
| 20:3 | 106-5270 | 1 | Ignition Key Set |
| 20:4 | 108-8659 | 1 | Washer-Backup |
| 21 | 121-5644 | 1 | Decal-Control Panel |
| 22 | 120-4158 | 1 | Decal-Console, Upper |
| 23 | 3296-2 | 3 | Nut-Lock, NI |
| 27 | 99-8970 | 1 | Key-Latch, Hood |
| 28 | 3250-22 | 1 | Screw-PPH |
| 29 | 114-0446 | 1 | Panel-Access |
| 30 | 117-0169 | 1 | Decal-Fuses |
| 31 | 114-3321 | 1 | Controller-Tec |
| 32 | 32144-87 | 4 | Screw-HWHTF |
| 33 | 108-7602 | 1 | Rest-Arm |
| 34 | 110-8912 | 1 | Seal-Foam |
| 35 | 110-5331 | 1 | Spring-Compression |
| 36 | 283-88 | 1 | Pin-Clevis |
| 37 | 32144-41 | 2 | Screw-Taptite |
| 38 | 4-2390 | 2 | Washer-Flat |
| 39 | 110-5313-03 | 1 | Bracket-Retainer |
| 40 | 283-73 | 1 | Pin-Clevis |

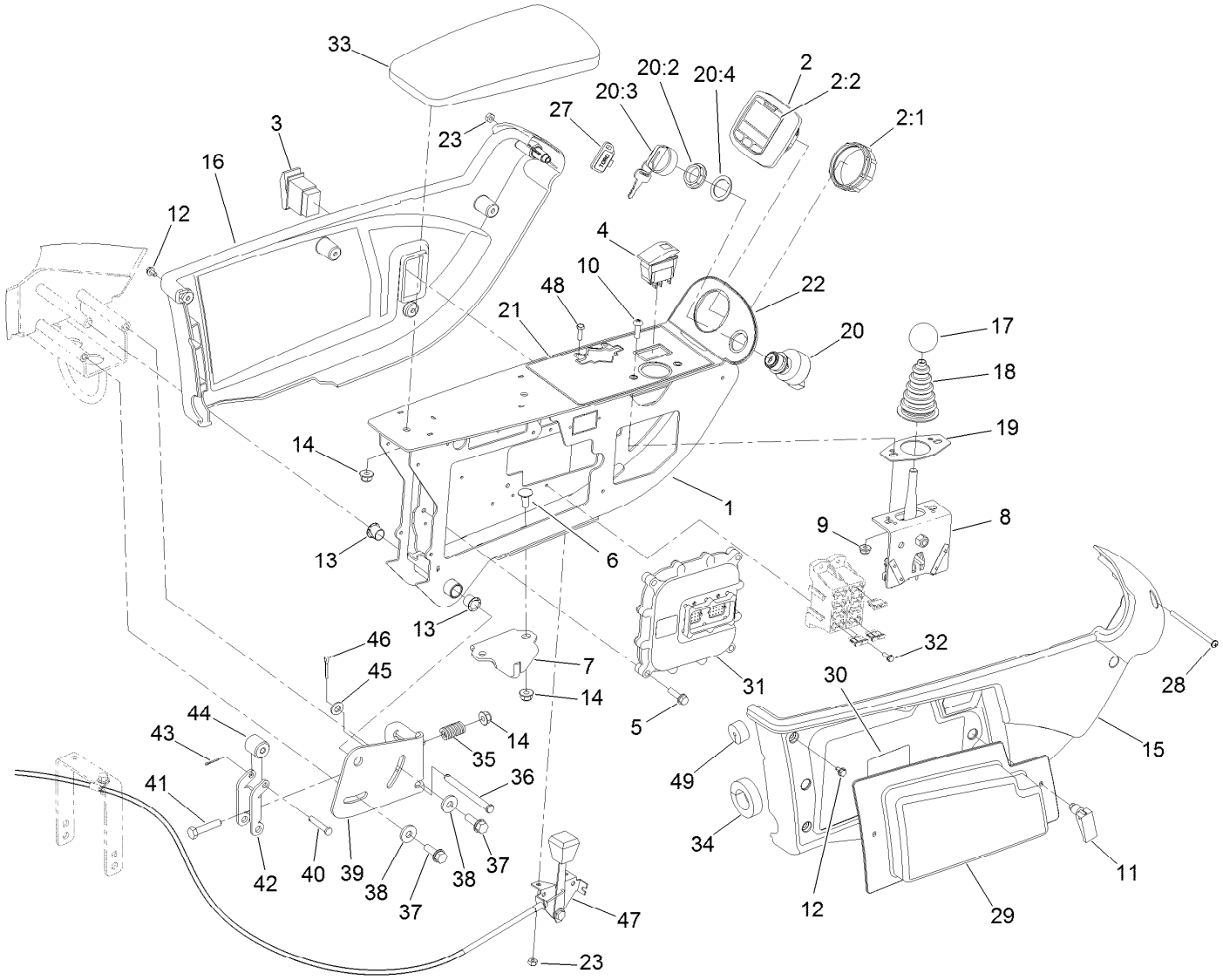


# Console and Control Arm Assembly (continued)

| Ref. | Part Number | Qty. | Description |
|---|---|---|---|
| 41 | 322-7 | 1 | Screw-HH |
| 42 | 110-5314 | 1 | Latch |
| 43 | 3272-1 | 1 | Pin-Cotter |
| 44 | 110-8856 | 1 | Spacer |
| 45 | 3256-23 | 1 | Washer-Plain |
| 46 | 3272-11 | 1 | Pin-Cotter |
| 47 | 133-2929 | 1 | Control-Throttle |
| 48 | 3290-134 | 2 | Screw |
| 49 | 110-8911 | 1 | Seal-Foam |

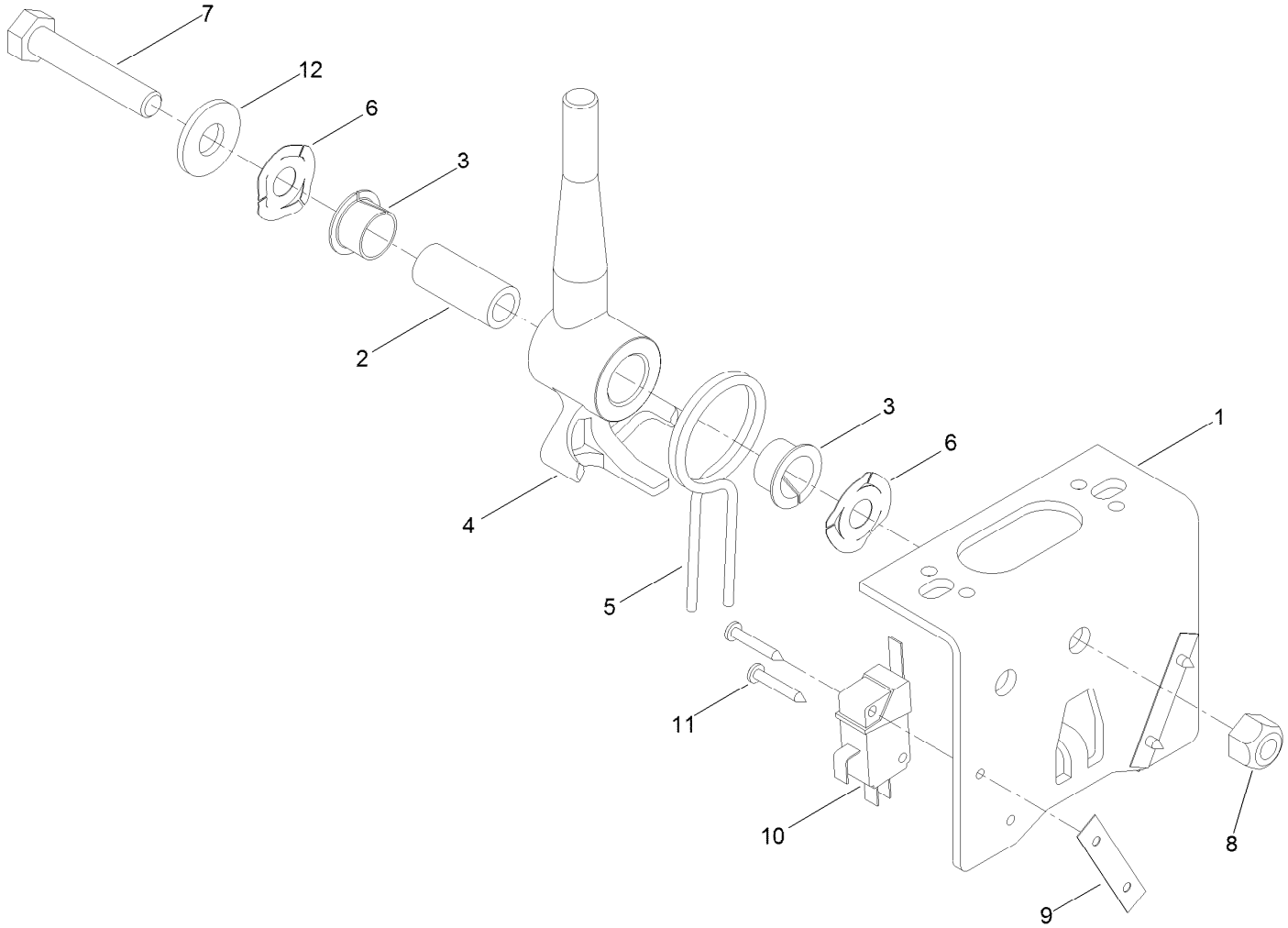


# Joystick Bracket Assembly No. 120-5280

| *Ref.* | *Part Number* | *Qty.* | *Description* |
|---|---|---|---|
| 1 | 115-5357-03 | 1 | Bracket-Joystick |
| 2 | 106-4192 | 1 | Spacer |
| 3 | 93-5547 | 2 | Bushing-Nylon |
| 4 | 119-3540 | 1 | Hub-Pivot, Joystick |
| 5 | 105-8289 | 1 | Spring-Torsion |
| 6 | 106-4193 | 2 | Washer-Finger, Spring |
| 7 | 322-9 | 1 | Screw-HH |
| 8 | 3296-29 | 1 | Nut-Lock, NI |
| 9 | 3290-354 | 2 | Nut-Speed |
| 10 | 108-6496 | 2 | Switch (W/Boot) |
| 11 | 95-3003 | 4 | Screw-PPHTF |
| 12 | 3256-3 | 1 | Washer-Flat |

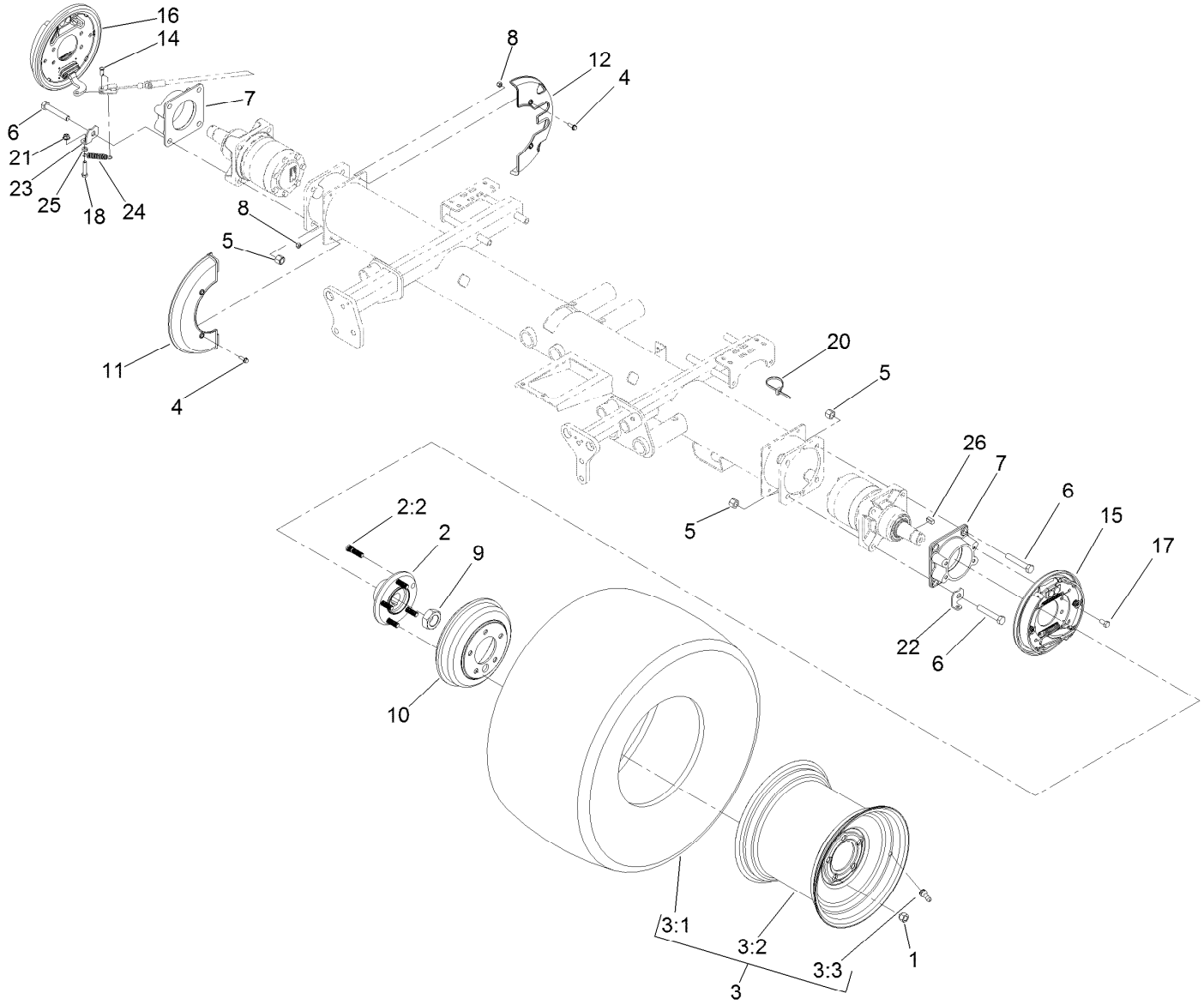


# Front Axle Assembly

| Ref. | Part Number | Qty. | Description |
|---|---|---|---|
| 1 | 242-50 | 10 | Nut-Lug |
| 2 | 121-5631 | 2 | Hub ASM |
| 2:2 | 114-3918 | 5 | Stud-Wheel |
| 3 | 139-6005 | 2 | Tire ASM |
| 3:1 | 133-2724 | 1 | Tire |
| 3:2 | 139-6006 | 1 | Wheel |
| 3:3 | 232-27 | 1 | Stem-Valve |
| 4 | 115-5103 | 8 | Screw-HHF |
| 5 | 3296-23 | 8 | Nut-Lock, NI |
| 6 | 325-12 | 8 | Screw-HH |
| 7 | 120-6253-03 | 2 | Adapter-Brake |
| 8 | 3296-42 | 8 | Nut-Lock, NI |
| 9 | 117-3290 | 2 | Nut-Hex |
| 10 | 114-8864 | 2 | Drum-Brake |

| Ref. | Part Number | Qty. | Description |
|---|---|---|---|
| 11 | 127-2741 | 2 | Shield-Wheel, Front |
| 12 | 127-2742 | 2 | Shield-Wheel, Rear |
| 14 | 283-62 | 2 | Pin-Clevis |
| 15 | 139-5952 | 1 | LH Brake ASM |
| 16 | 139-5951 | 1 | RH Brake ASM |
| 17 | 323-4 | 8 | Screw-HH |
| 18 | 322-7 | 2 | Screw-HH |
| 20 | 3290-378 | 2 | Tie-Cable |
| 21 | 104-8300 | 2 | Nut-HF, NI |
| 22 | 120-6267 | 1 | Clip-Spring, LH |
| 23 | 120-6266 | 1 | Clip-Spring, RH |
| 24 | 87-4020 | 2 | Spring-Extension |
| 25 | 3218-2 | 2 | Nut-Hex Jam |
| 26 | 117-5198 | 2 | Key-Square |

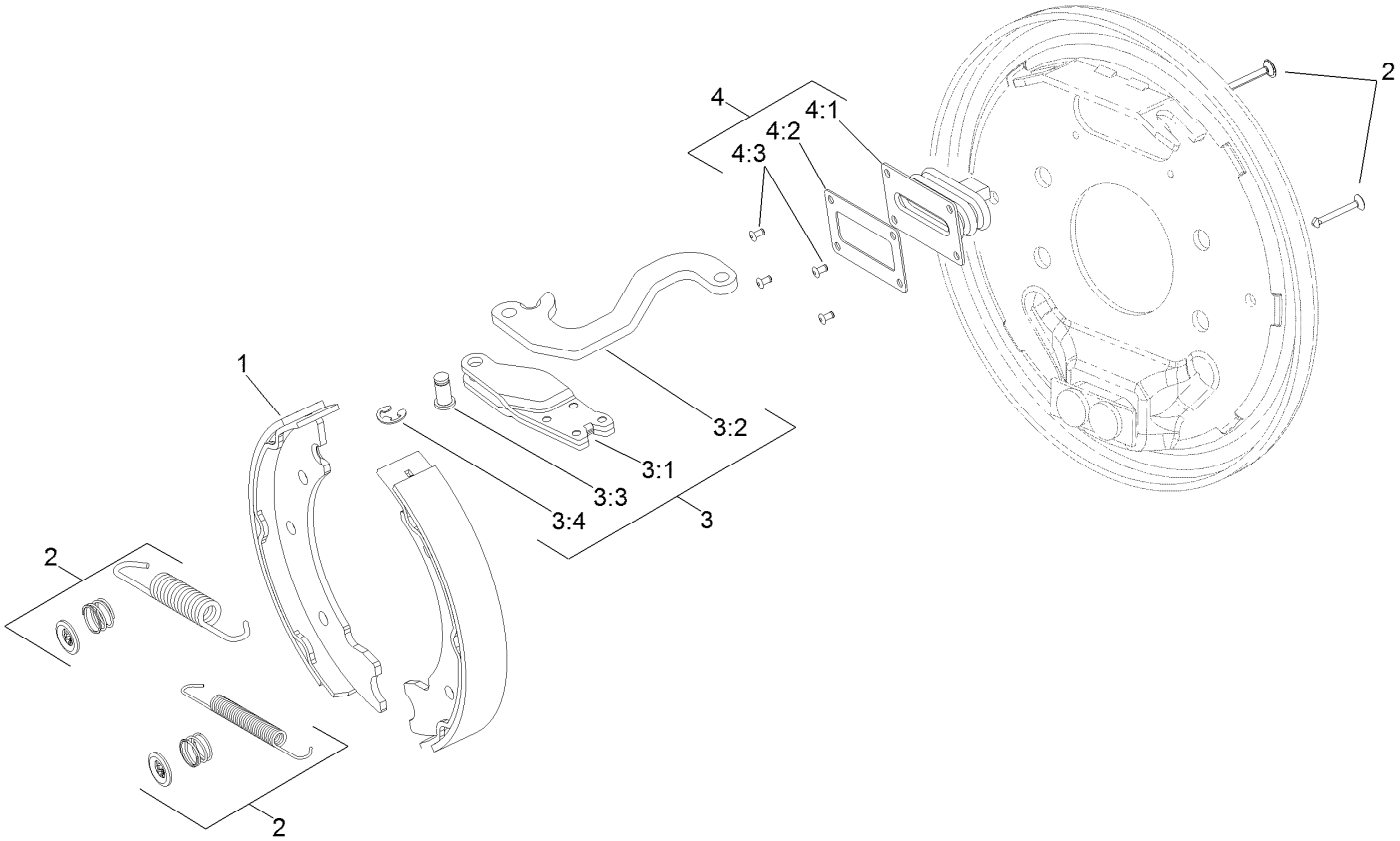


# LH Brake Assembly No. 139-5952

| *Ref.* | *Part Number* | *Qty.* | *Description* |
|---|---|---|---|
| 1 | 139-5950 | 1 | Brake Shoe Kit |
| 2 | 108-6983 | 1 | Brake Hardware Kit |
| 3 | 110-8910 | 1 | LH Actuator Kit |
| 3:1 | | 1 | Housing ● |
| 3:2 | | 1 | Lever-LH ● |
| 3:3 | | 1 | Pin-Pivot ● |
| 3:4 | | 1 | E-Ring ● |
| 4 | 110-8885 | 1 | Dust Boot Kit |
| 4:1 | | 1 | Boot ● |
| 4:2 | | 1 | Plate-Back Up ● |
| 4:3 | | 2 | Rivet ● |

● Not serviced separately

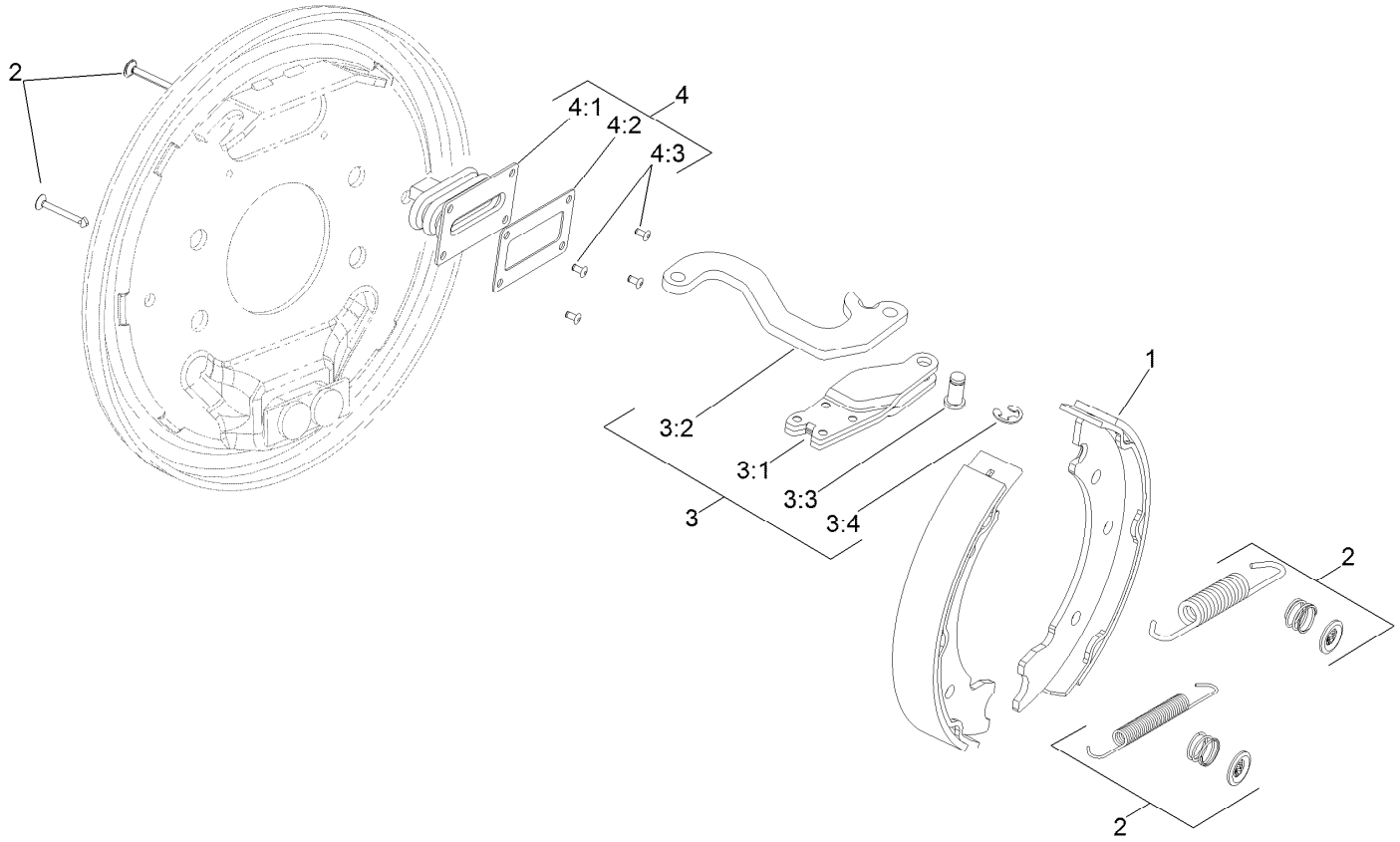


# RH Brake Assembly No. 139-5951

| *Ref.* | *Part Number* | *Qty.* | *Description* |
|---|---|---|---|
| 1 | 139-5950 | 1 | Brake Shoe Kit |
| 2 | 108-6983 | 1 | Brake Hardware Kit |
| 3 | 110-8884 | 1 | RH Actuator Kit |
| 3:1 | | 1 | Housing ● |
| 3:2 | | 1 | Lever-RH ● |
| 3:3 | | 1 | Pin-Pivot ● |
| 3:4 | | 1 | E-Ring ● |
| 4 | 110-8885 | 1 | Dust Boot Kit |
| 4:1 | | 1 | Boot ● |
| 4:2 | | 1 | Plate-Back Up ● |
| 4:3 | | 2 | Rivet ● |

● Not serviced separately

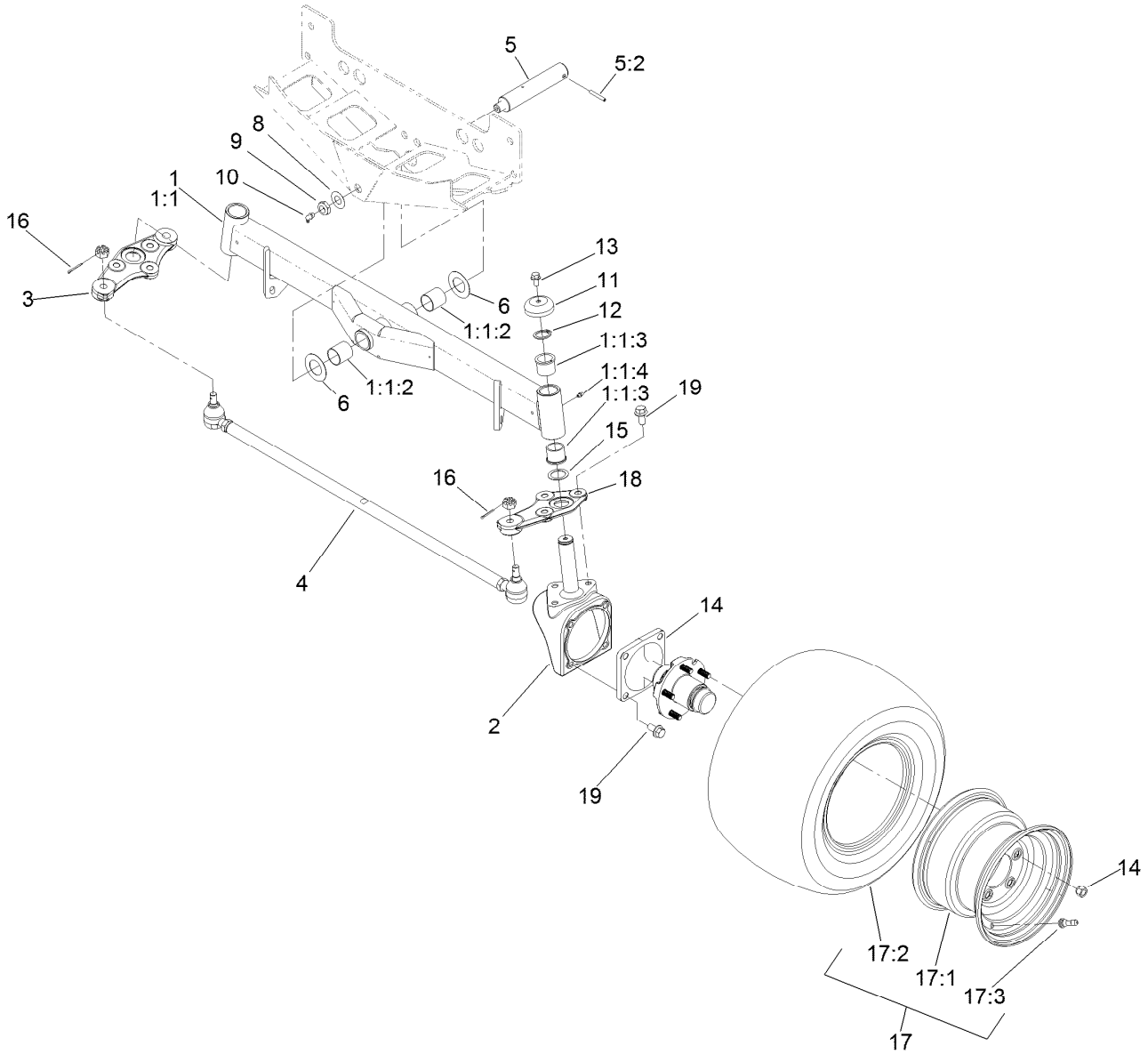


# Rear Axle Assembly

| Ref. | Part Number | Qty. | Description |
|---|---|---|---|
| 1 | 107-4546-03 | 1 | Axle ASM |
| 1:1 | | 1 | Axle ● |
| 1:1:2 | 99-6964 | 2 | Bushing-Axle |
| 1:1:3 | 104-0015 | 4 | Bushing-Flange |
| 1:1:4 | 302-5 | 2 | Fitting-Grease |
| 2 | 107-4517-03 | 2 | Housing-Motor |
| 3 | 140-3142 | 1 | Link-Drag, RH |
| 4 | 110-5334-03 | 1 | Tie Rod ASM |
| 5 | 140-6101 | 1 | Pin ASM-Axle Pivot |
| 5:2 | 32121-32 | 1 | Pin-Roll |
| 6 | 99-8432 | 2 | Washer-Thrust |
| 8 | 71-4540 | 1 | Washer-Thrust |
| 9 | 3296-15 | 1 | Nut-Lock, NI |

| Ref. | Part Number | Qty. | Description |
|---|---|---|---|
| 10 | 302-33 | 1 | Fitting-Grease |
| 11 | 69-8890 | 2 | Cap-Spindle |
| 12 | 32151-77 | 2 | Ring-Retaining, External |
| 13 | 3234-1 | 2 | Screw-HHF |
| 14 | 117-8961 | 2 | Hub And Spindle ASM |
| 15 | 76-2980 | 2 | Washer-Thrust |
| 16 | 3272-12 | 2 | Pin-Cotter |
| 17 | 117-0281 | 2 | Rim And Tire ASM |
| 17:1 | 117-0280 | 1 | Rim |
| 17:2 | 117-5125 | 1 | Tire |
| 17:3 | 232-27 | 1 | Stem-Valve |
| 18 | 140-3144 | 1 | Link-Drag, LH |
| 19 | 3234-6 | 14 | Screw-HHF |

● Not serviced separately

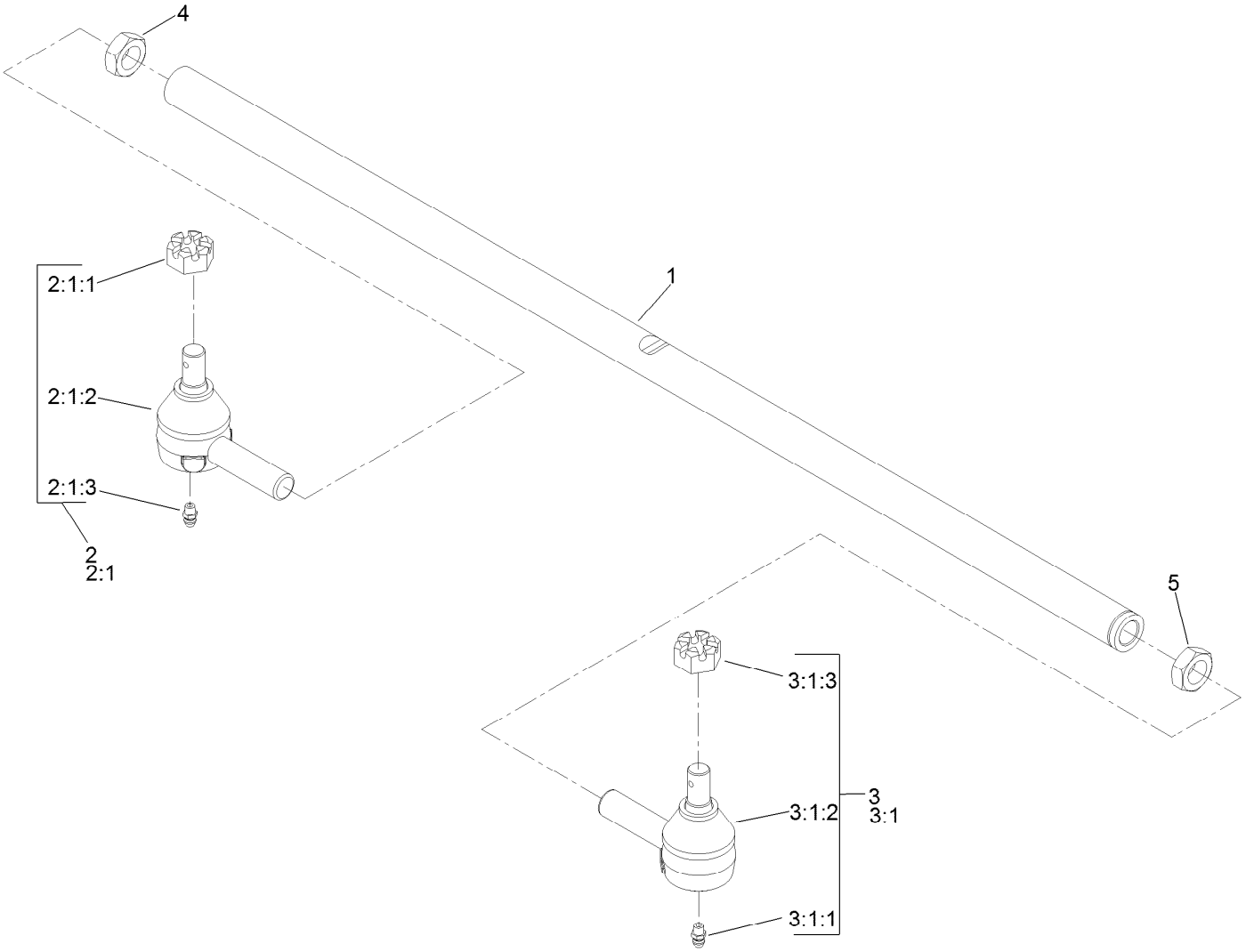


# Tie Rod Assembly No. 110-5334-03

| *Ref.* | *Part Number* | *Qty.* | *Description* |
|---|---|---|---|
| 1 | 110-5335 | 1 | Rod-Tie |
| 2 | 71-4740-03 | 1 | RH Tie Rod End ASM |
| 2:1 | | 1 | End-Rod, Tie (RH) ●■ |
| 2:1:1 | 105-7941 | 1 | Nut-Hex, Slotted |
| 2:1:2 | 105-7835 | 1 | Seal |
| 2:1:3 | 302-5 | 1 | Fitting-Grease |
| 3 | 2411-46-03 | 1 | LH Tie Rod ASM |
| 3:1 | 2411-46 | 1 | End-Rod, Tie (LH) ● |
| 3:1:1 | 302-5 | 1 | Fitting-Grease |
| 3:1:2 | 105-7835 | 1 | Seal |
| 3:1:3 | 105-7941 | 1 | Nut-Hex, Slotted |
| 4 | 84-5300 | 1 | Nut-Jam |
| 5 | 110-5337 | 1 | Nut-Jam |

● Not illustrated

■ Not serviced separately

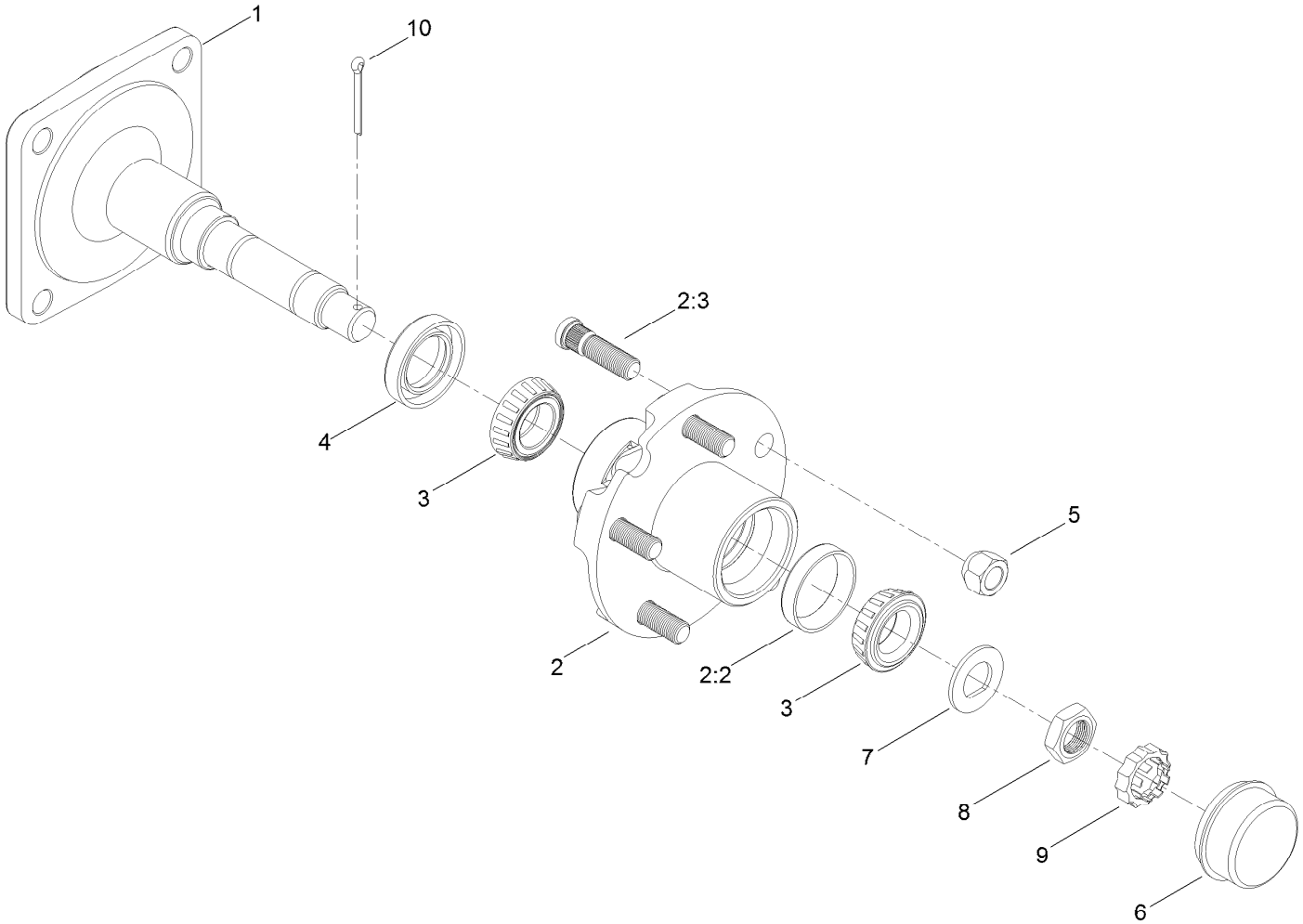


# Hub and Spindle Assembly No. 117-8961

| *Ref.* | *Part Number* | *Qty.* | *Description* |
|---|---|---|---|
| 1 | 117-8958 | 1 | Spindle |
| 2 | 117-8963 | 1 | Hub ASM |
| 2:2 | 254-72 | 2 | Bearing-Cup, Tapered |
| 2:3 | 114-3918 | 5 | Stud-Wheel |
| 3 | 254-94 | 2 | Bearing-Cone, Tapered |
| 4 | 112-1690 | 1 | Seal-Oil |
| 5 | 242-50 | 5 | Nut-Lug |
| 6 | 241-119 | 1 | Cap-Dust |
| 7 | 117-8259 | 1 | Washer-Spindle |
| 8 | 117-8260 | 1 | Nut |
| 9 | 93-0307 | 1 | Nut-Lock, Retainer |
| 10 | 3272-18 | 1 | Pin-Cotter |

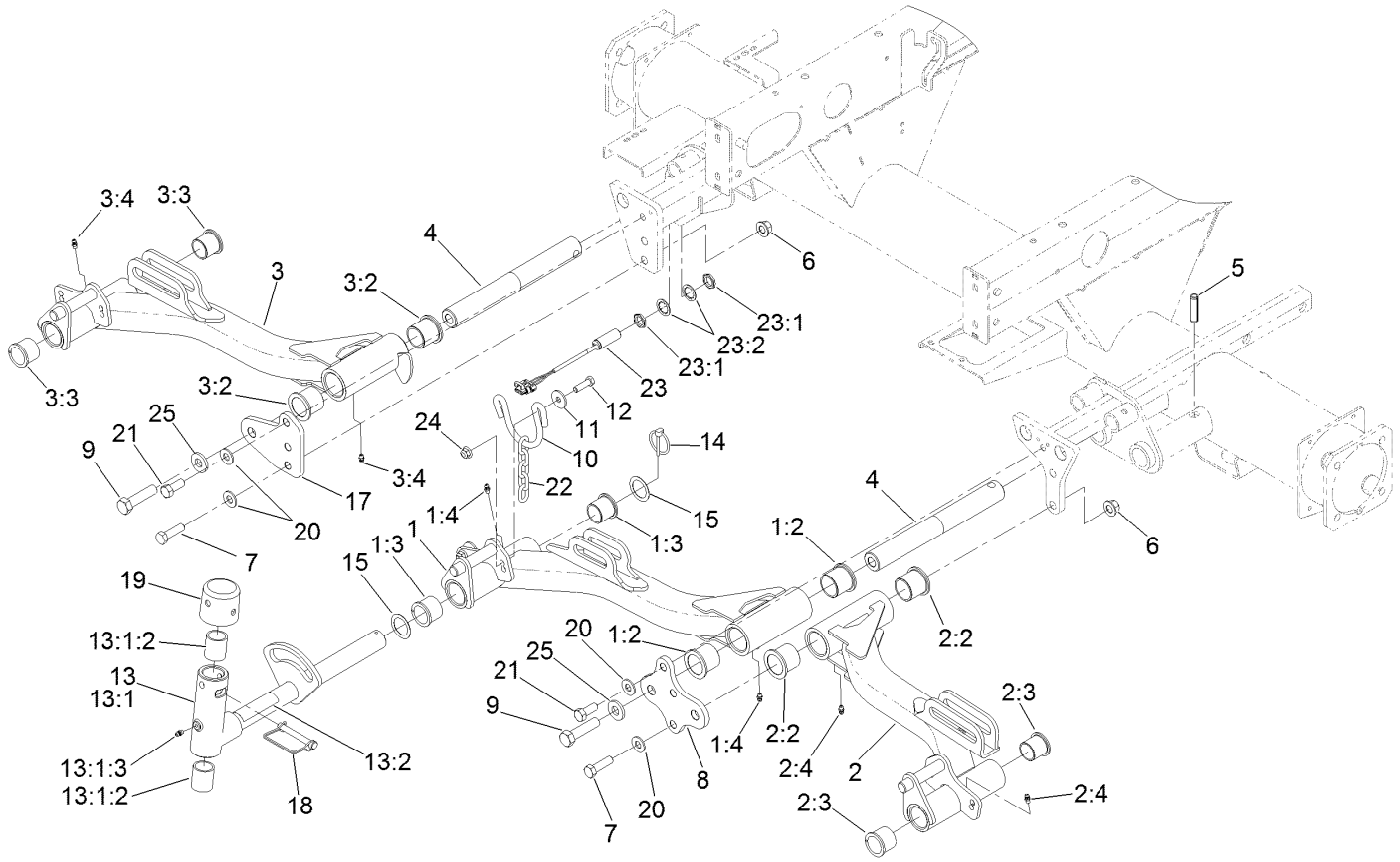


# No. 1, 4 and 5 Lift Arm Assembly

| Ref. | Part Number | Qty. | Description |
|---|---|---|---|
| 1 | 136-8001 | 1 | Lift Arm #1 |
| 1:2 | 69-6470 | 2 | Bushing-Caster |
| 1:3 | 104-0015 | 2 | Bushing-Flange |
| 1:4 | 302-5 | 2 | Fitting-Grease |
| 2 | 136-8004 | 1 | Lift Arm #4 |
| 2:2 | 69-6470 | 2 | Bushing-Caster |
| 2:3 | 104-0015 | 2 | Bushing-Flange |
| 2:4 | 302-5 | 2 | Fitting-Grease |
| 3 | 136-8005 | 1 | Lift Arm #5 |
| 3:2 | 69-6470 | 2 | Bushing-Caster |
| 3:3 | 104-0015 | 2 | Bushing-Flange |
| 3:4 | 302-5 | 2 | Fitting-Grease |
| 4 | 117-0208 | 3 | Shaft-Pivot, Liftarm |
| 5 | 32121-122 | 3 | Pin-Roll |
| 6 | 99-5107 | 4 | Nut-Lock |
| 7 | 325-7 | 4 | Screw-HH |
| 8 | 117-5154-01 | 1 | Plate-Bridge 1 And 4 |
| 9 | 327-7 | 3 | Screw-HH |

| Ref. | Part Number | Qty. | Description |
|---|---|---|---|
| 10 | 110-0922 | 3 | Hoop-Chain |
| 11 | 63-8410 | 6 | Washer |
| 12 | 323-7 | 6 | Screw-HH |
| 13 | 138-1248 | 3 | Pivot Yoke ASM |
| 13:1 | | 1 | Yoke-Pivot ● |
| 13:1:2 | 121-3187 | 2 | Bushing |
| 13:1:3 | 302-5 | 1 | Fitting-Grease |
| 13:2 | 110-9642 | 1 | Decal-Warning |
| 14 | 92-1298 | 3 | Pin-Lynch |
| 15 | 76-2980 | 6 | Washer-Thrust |
| 17 | 117-5153-01 | 1 | Plate-Bridge 5 |
| 18 | 107-7400 | 3 | Pin-Lynch |
| 19 | 107-4027 | 3 | Cap |
| 20 | 87-7270 | 6 | Washer-Thrust |
| 21 | 325-5 | 2 | Screw-HH |
| 22 | 84-2451 | 3 | Chain-Straight, 5 Link |
| 23 | 115-5300 | 1 | Proximity Switch ASM |
| 23:1 | 117-3207 | 2 | Nut-Hex |

● Not serviced separately

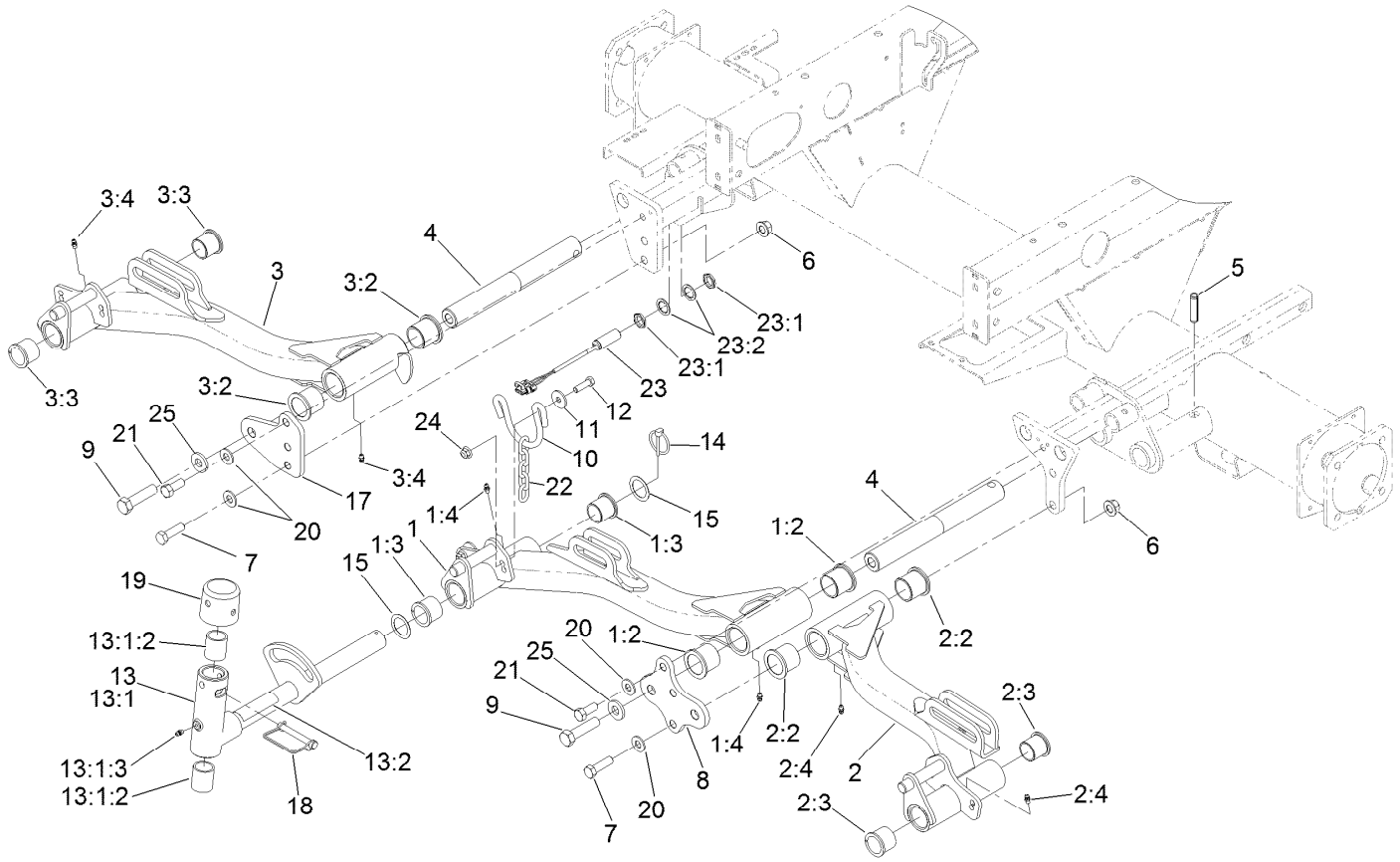


# No. 1, 4 and 5 Lift Arm Assembly (continued)

| Ref. | Part Number | Qty. | Description |
|---|---|---|---|
| 23:2 | 117-3208 | 2 | Washer-Lock, Internal Tooth |

| Ref. | Part Number | Qty. | Description |
|---|---|---|---|
| 24 | 104-8301 | 6 | Nut-HF, NI |
| 25 | 99-7667 | 3 | Washer-Flat |

● Not serviced separately

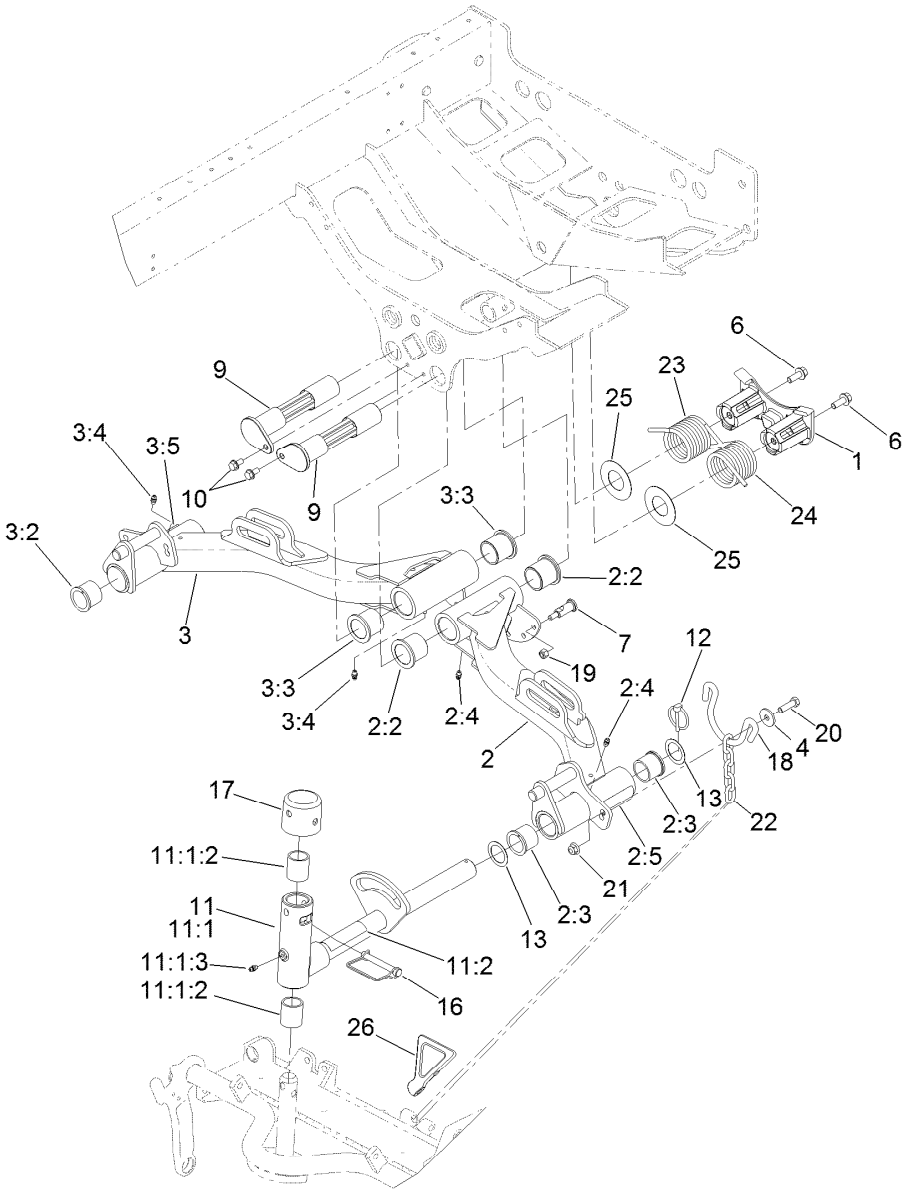


# No. 2 and 3 Lift Arm Assembly

| Ref. | Part Number | Qty. | Description |
|---|---|---|---|
| 1 | 125-2018 | 1 | Housing |
| 2 | 136-8002 | 1 | Lift Arm #2 |
| 2:2 | 69-6470 | 2 | Bushing-Caster |
| 2:3 | 104-0015 | 2 | Bushing-Flange |
| 2:4 | 302-5 | 2 | Fitting-Grease |
| 2:5 | 93-6696 | 1 | Decal-Warning |
| 3 | 136-8003 | 1 | Lift Arm #3 |
| 3:2 | 69-6470 | 2 | Bushing-Caster |
| 3:3 | 104-0015 | 2 | Bushing-Flange |
| 3:4 | 302-5 | 2 | Fitting-Grease |
| 3:5 | 93-6696 | 1 | Decal-Warning |
| 4 | 63-8410 | 4 | Washer |
| 6 | 3234-11 | 2 | Screw-HHF |
| 7 | 120-6283 | 6 | Stud-Shouldered |
| 9 | 125-2037 | 2 | Shaft |
| 10 | 32144-14 | 2 | Screw-HWHTF |
| 11 | 138-1248 | 2 | Pivot Yoke ASM |

| Ref. | Part Number | Qty. | Description |
|---|---|---|---|
| 11:1 | | 1 | Yoke-Pivot ● |
| 11:1:2 | 121-3187 | 2 | Bushing |
| 11:1:3 | 302-5 | 1 | Fitting-Grease |
| 11:2 | 110-9642 | 1 | Decal-Warning |
| 12 | 92-1298 | 2 | Pin-Lynch |
| 13 | 76-2980 | 4 | Washer-Thrust |
| 16 | 107-7400 | 2 | Pin-Lynch |
| 17 | 107-4027 | 2 | Cap |
| 18 | 110-0922 | 2 | Hoop-Chain |
| 19 | 3296-29 | 6 | Nut-Lock, NI |
| 20 | 323-7 | 4 | Screw-HH |
| 21 | 104-8301 | 4 | Nut-HF, NI |
| 22 | 84-2451 | 2 | Chain-Straight, 5 Link |
| 23 | 99-5608-03 | 1 | Spring-Torsion, RH |
| 24 | 99-5609-03 | 1 | Spring-Torsion, LH |
| 25 | 110-5345 | 2 | Washer |
| 26 | 119-8010-03 | 1 | Kickstand |

● Not serviced separately

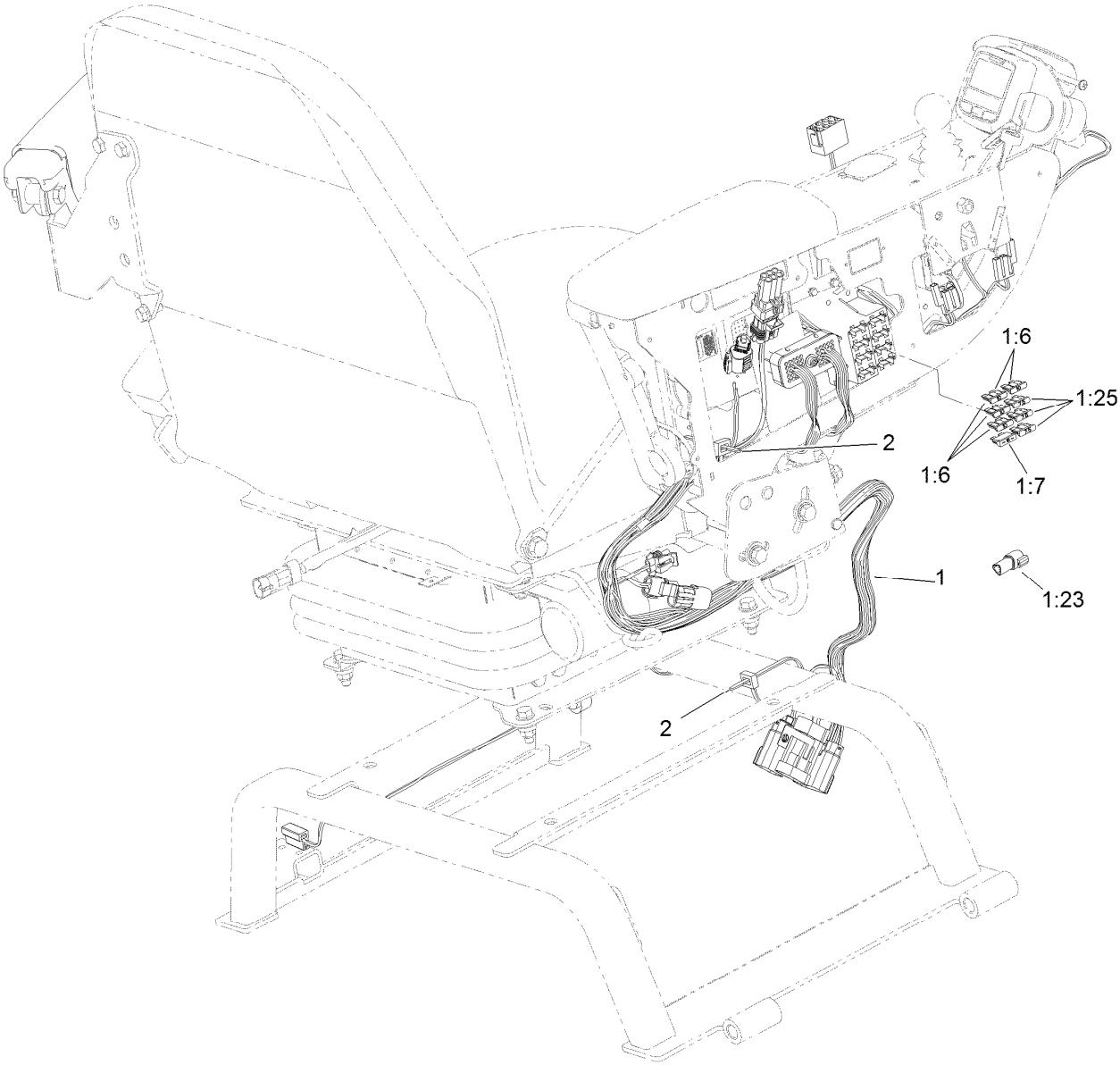


# Seat and Control Arm Wiring Harness Assembly

| *Ref.* | *Part Number* | *Qty.* | *Description* |
|---|---|---|---|
| 1 | 115-8081 | 1 | Harness-Wire, Seat |
| 1:6 | 218-578 | 3 | Fuse-Blade, 10 Amp |
| 1:7 | 109355 | 1 | Fuse-Blade, 15 Amp |
| 1:23 | 32180-043 | 1 | Resistor-120 Ohm |
| 1:25 | 114241 | 3 | Fuse-Blade, 7.5 Amp |
| 2 | 3290-378 | 3 | Tie-Cable |

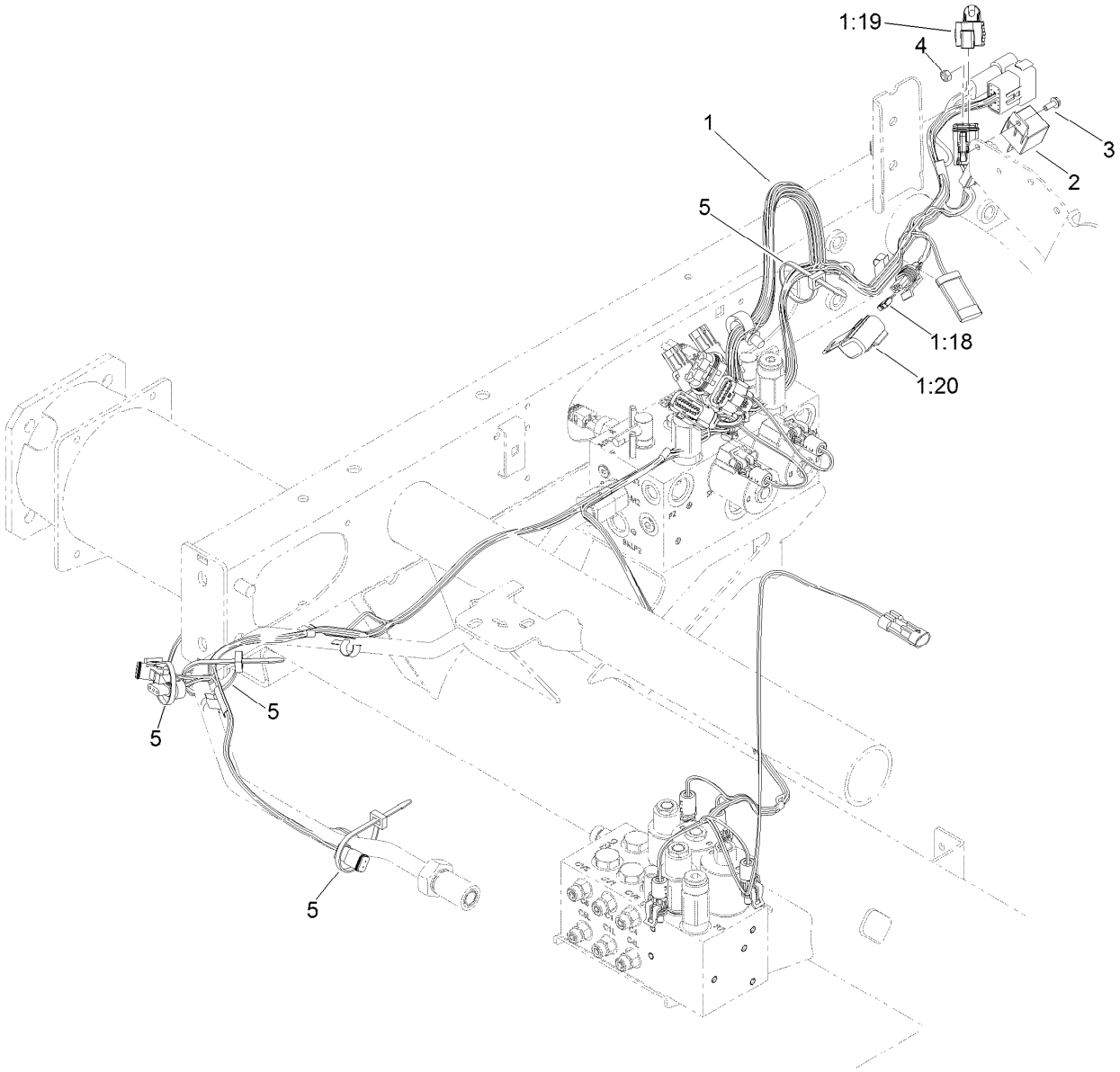


# Main Wiring Harness Assembly

| *Ref.* | *Part Number* | *Qty.* | *Description* |
|---|---|---|---|
| 1 | 122-1726 | 1 | Harness-Wire, Rm5010 Main |
| 1:18 | 121-8866 | 1 | Fuse-Mini Blade, 10 Amp |
| 1:19 | 32180-156 | 1 | Cap-Plug, 6 Way |
| 1:20 | 32180-101 | 1 | Cover-Fuse, Single |
| 2 | 99-7435 | 1 | Relay |
| 3 | 3290-321 | 1 | Screw-HWH |
| 4 | 3296-2 | 1 | Nut-Lock, NI |
| 5 | 3290-378 | 10 | Tie-Cable |

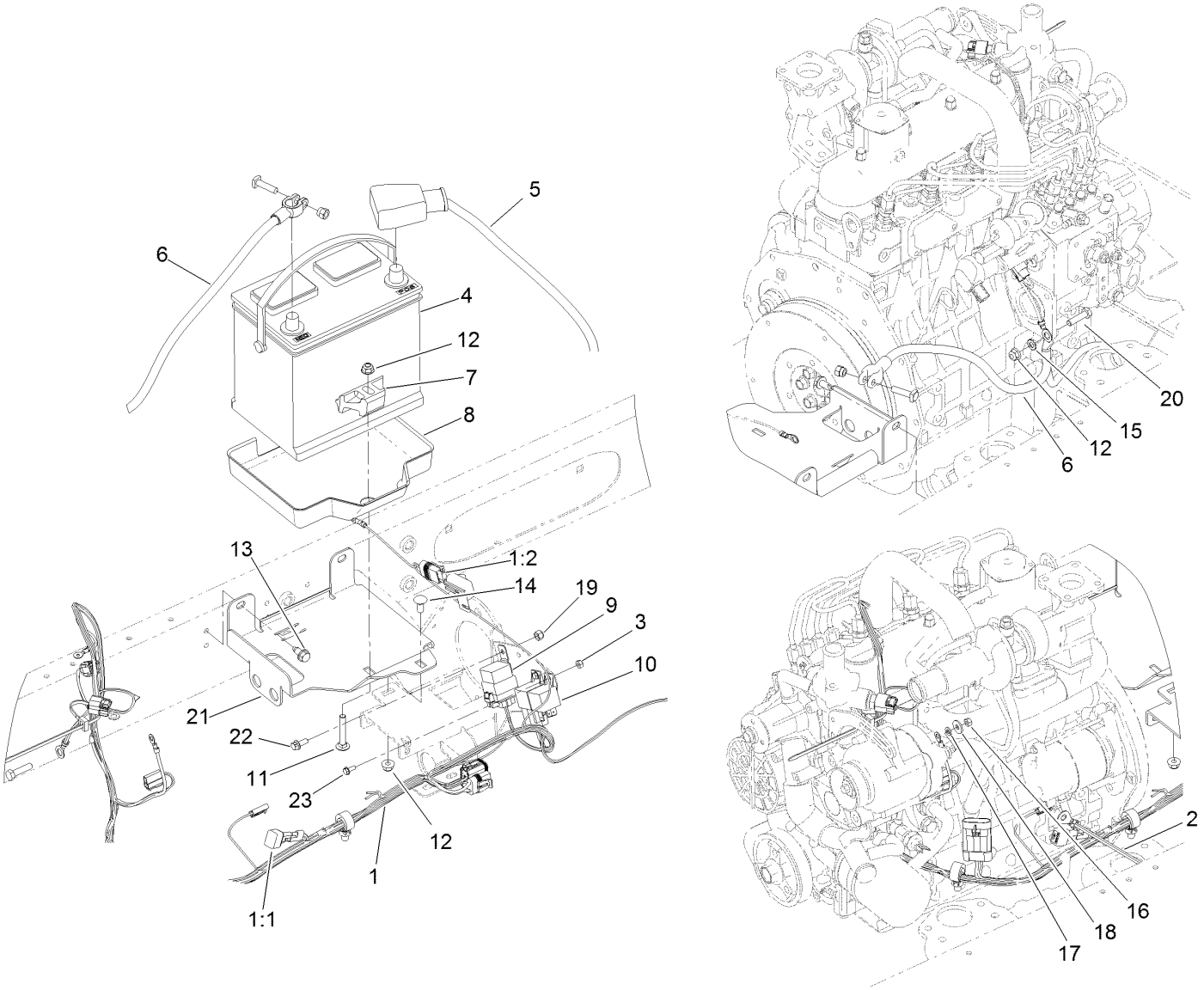


# Battery Mounting Assembly

| Ref. | Part Number | Qty. | Description |
|---|---|---|---|
| 1 | 120-6346 | 1 | Harness-Wire, Row Engine |
| 1:1 | 100-4918 | 1 | Diode |
| 1:2 | 94-6710 | 1 | Fuse-2 Amp |
| 2 | 99-3441 | 1 | Harness-Wire, Fusible Link |
| 3 | 3296-2 | 1 | Nut-Lock, NI |
| 4 | 104-9979 | 1 | Battery |
| 5 | 108-1802 | 1 | Cable-Battery, Positive |
| 6 | 110-8813 | 1 | Cable-Battery, Negative |
| 7 | 138-6335 | 1 | Retainer-Battery |
| 8 | 99-3513 | 1 | Tray-Battery |
| 9 | 99-7430 | 1 | Relay-Mini |
| 10 | 99-7435 | 1 | Relay |
| 11 | 3230-6 | 1 | Bolt-CARR |

| Ref. | Part Number | Qty. | Description |
|---|---|---|---|
| 12 | 104-8300 | 4 | Nut-HF, NI |
| 13 | 32104-32 | 2 | Screw-HWH |
| 14 | 3230-1 | 1 | Bolt-CARR |
| 15 | 3255-8 | 1 | Washer-Lock |
| 16 | 48-7890 | 1 | Nut-Hex |
| 17 | 43-5930 | 1 | Washer-Lock, Spring |
| 18 | 3256-78 | 1 | Washer-Flat |
| 19 | 3296-42 | 1 | Nut-Lock, NI |
| 20 | 322-6 | 1 | Screw-HH |
| 21 | 110-0907-01 | 1 | Bracket-Battery |
| 22 | 3234-33 | 1 | Screw-HHF |
| 23 | 3290-321 | 1 | Screw-HWH |

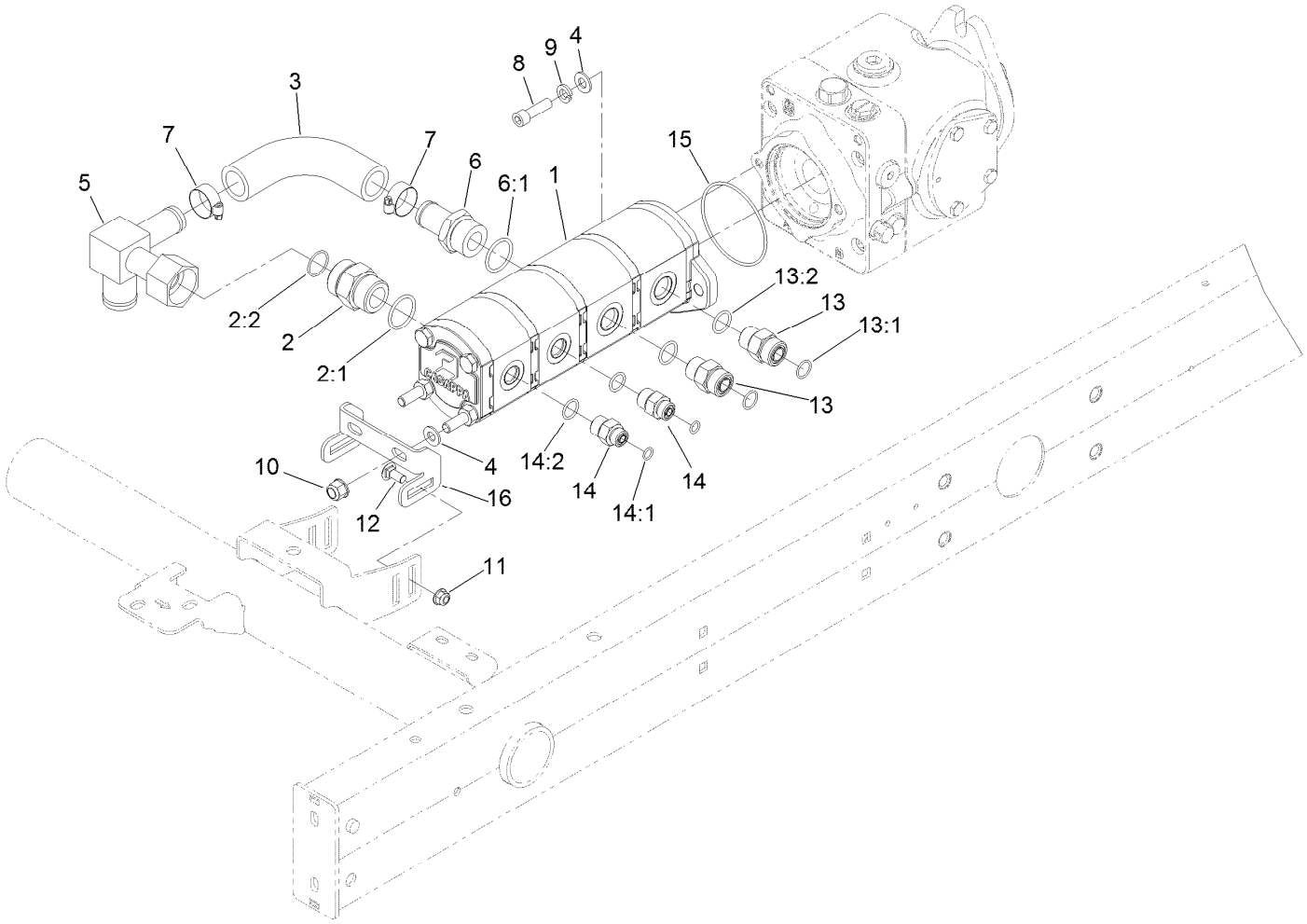


# Gear Pump Assembly

| Ref. | Part Number | Qty. | Description |
|---|---|---|---|
| 1 | 107-4547 | 1 | Gear Pump ASM |
| 2 | 104-3797 | 1 | Fitting-Straight |
| 2:1 | 237-146 | 1 | O-Ring |
| 2:2 | 340-65 | 1 | O-Ring |
| 3 | 108-1683 | 1 | Hose-Formed |
| 4 | 3256-24 | 4 | Washer-Flat |
| 5 | 108-1672 | 1 | Manifold-Tube |
| 6 | 354-78 | 1 | Fitting-STR |
| 6:1 | 237-146 | 1 | O-Ring |
| 7 | 2412-34 | 2 | Clamp-Hose |
| 8 | 3274-1 | 2 | Screw-HSH |
| 9 | 3253-5 | 2 | Washer-Lock |

| Ref. | Part Number | Qty. | Description |
|---|---|---|---|
| 10 | 103-9511 | 2 | Nut-Lock, NI |
| 11 | 104-8300 | 2 | Nut-HF, NI |
| 12 | 3230-1 | 2 | Bolt-CARR |
| 13 | 340-7 | 2 | Fitting-Straight |
| 13:1 | 237-65 | 1 | O-Ring |
| 13:2 | 237-80 | 1 | O-Ring |
| 14 | 340-3 | 2 | Fitting-Straight |
| 14:1 | 237-22 | 1 | O-Ring |
| 14:2 | 237-79 | 1 | O-Ring |
| 15 | 237-161 | 1 | O-Ring |
| 16 | 108-1801-0P | 1 | Bracket - Pump Support |

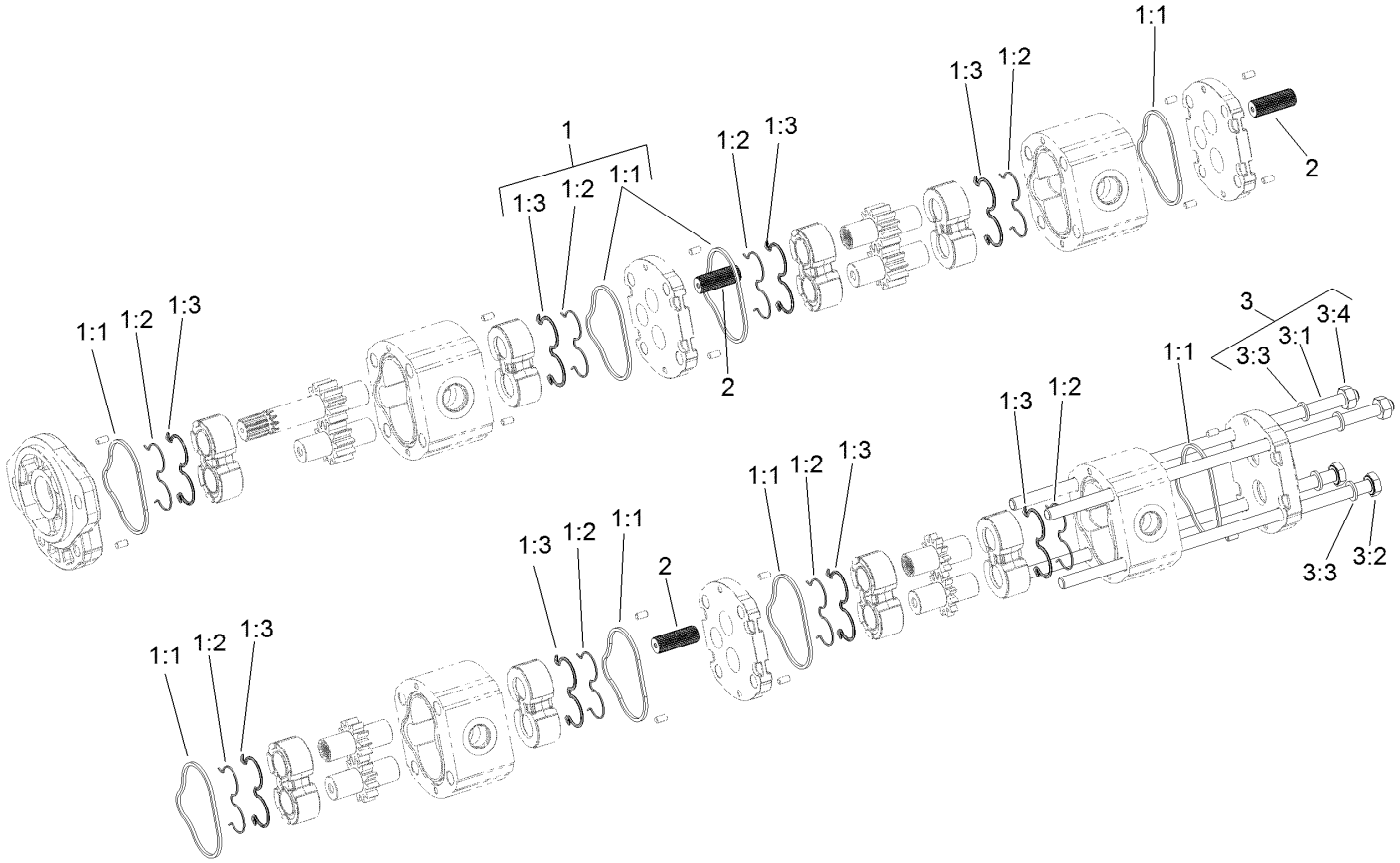


# Gear Pump Assembly No. 107-4547

| *Ref.* | *Part Number* | *Qty.* | *Description* |
|---|---|---|---|
| 1 | 108-4595 | 1 | Seal Kit |
| 1:1 | | 8 | Seal ● |
| 1:2 | | 8 | Seal ● |
| 1:3 | | 8 | Ring-Back Up ● |
| 2 | 120-6284 | 3 | Hub-Connecting |
| 3 | 125-8760 | 1 | Kit-Bolt |
| 3:1 | | 2 | Bolt-Stud ● |
| 3:2 | | 2 | Screw ● |
| 3:3 | | 4 | Washer ● |
| 3:4 | | 2 | Nut ● |

● Not serviced separately

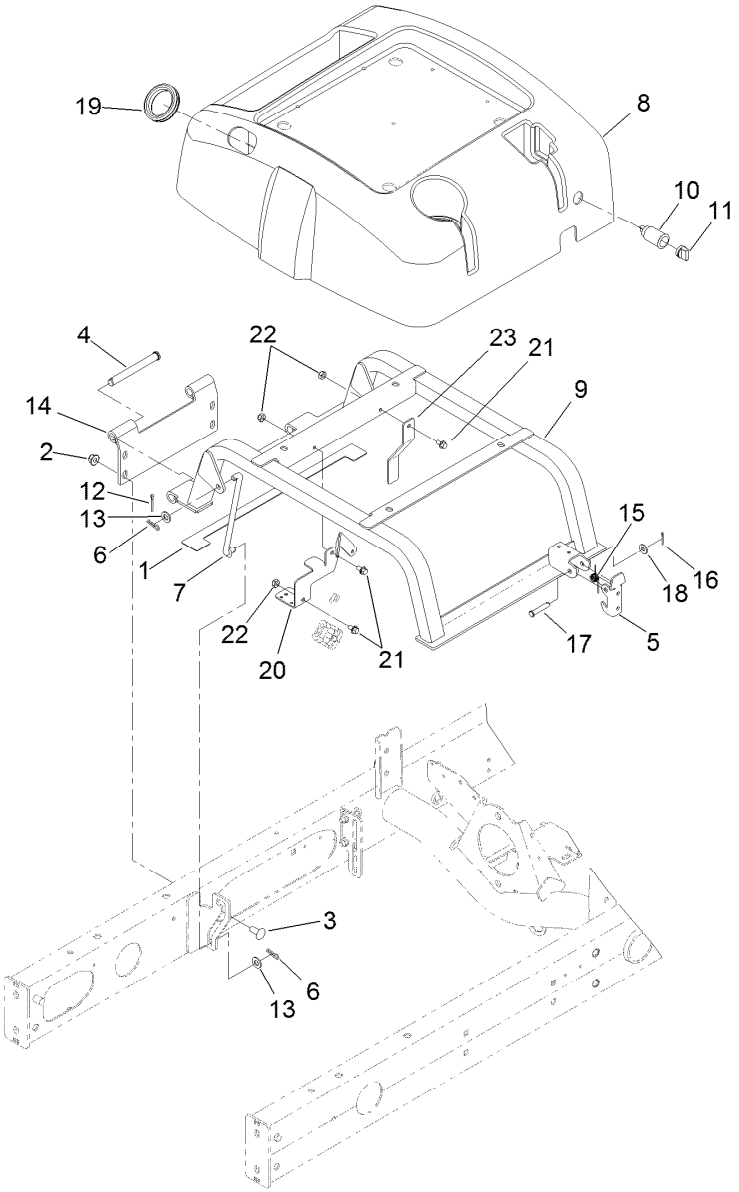


# Seat Base Assembly

| Ref. | Part Number | Qty. | Description |
|---|---|---|---|
| 1 | 110-5255 | 2 | Bumper-Base, Seat |
| 2 | 104-8301 | 4 | Nut-HF, NI |
| 3 | 3231-27 | 4 | Screw-CARR |
| 4 | 283-83 | 2 | Pin-Clevis |
| 5 | 110-8971 | 1 | Latch |
| 6 | 3290-307 | 4 | Pin-Cotter |
| 7 | 98-0917 | 2 | Rod-Prop |
| 8 | 108-1757 | 1 | Cover-Seatbase |
| 9 | 125-2122-03 | 1 | Seat Base ASM |
| 10 | 99-7411 | 1 | Point-Power |
| 11 | 99-7416 | 1 | Cap |
| 12 | 3272-11 | 2 | Pin-Cotter |
| 13 | 3256-24 | 4 | Washer-Flat |
| 14 | 125-2121-03 | 1 | Hinge-Seatbase |
| 15 | 104-4821 | 1 | Spring-Torsion |
| 16 | 3272-6 | 1 | Pin-Cotter |
| 17 | 94-3829 | 1 | Pin-Clevis |
| 18 | 3256-2 | 1 | Washer-Flat |
| 19 | 240-12 | 1 | Grommet-Rubber |
| 20 | 127-2711-0P | 1 | Bracket-Harness |
| 21 | 3234-13 | 3 | Screw-HHF |
| 22 | 3296-16 | 3 | Nut-Lock, NI |
| 23 | 127-2615-0P | 1 | Brkt-Wire Harness |

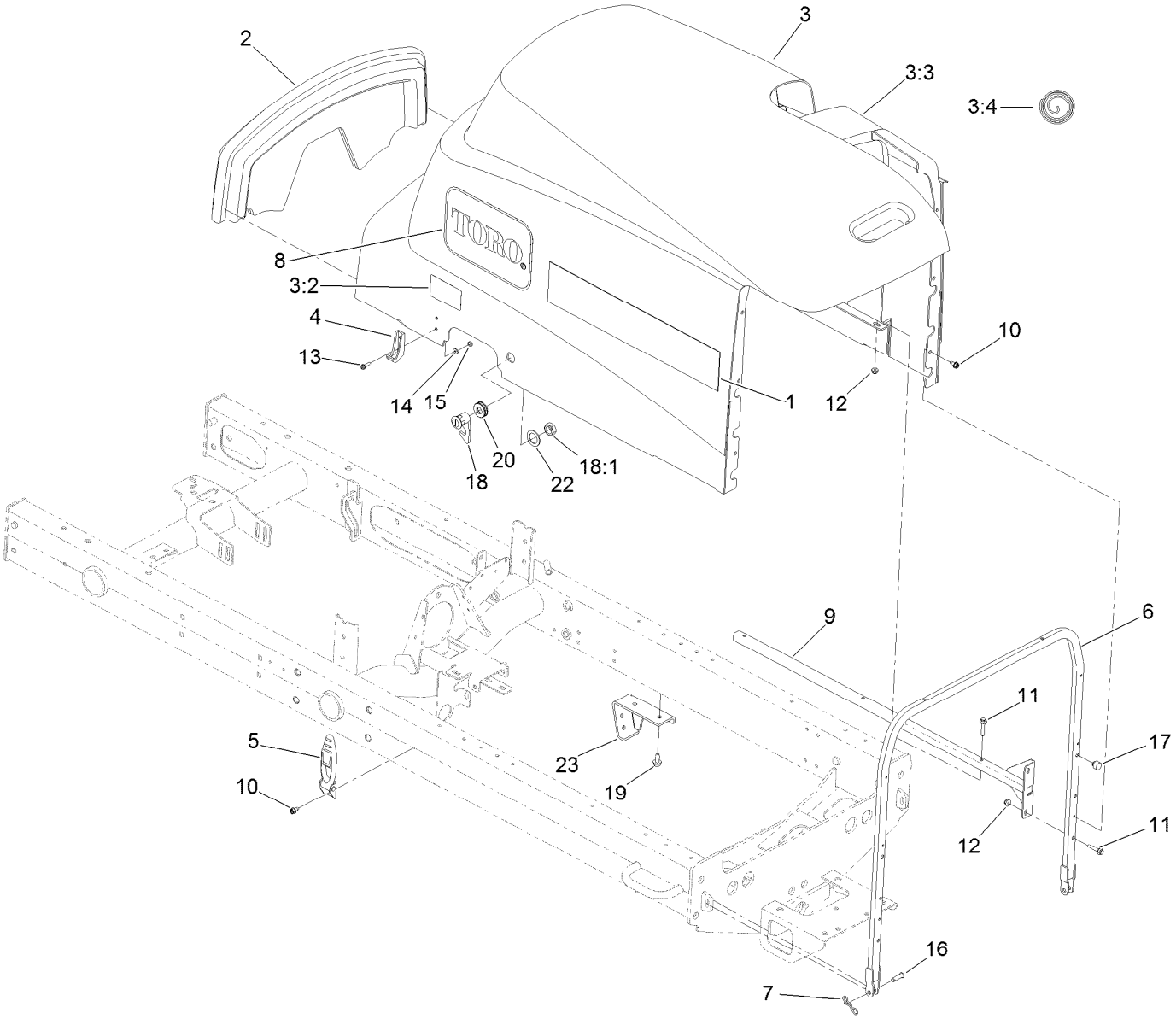


# Hood Assembly

| Ref. | Part Number | Qty. | Description |
|---|---|---|---|
| 1 | 110-0964 | 2 | Decal |
| 2 | 108-7587 | 1 | Saddle-Hood |
| 3 | 110-8994 | 1 | Hood ASM |
| 3:2 | 106-6754 | 1 | Decal-Danger |
| 3:3 | 110-5252 | 1 | Foam-Sealed |
| 3:4 | 110-9002 | 1 | Foil Tape Kit |
| 4 | 103-2897 | 2 | Latch-Catch |
| 5 | 103-2898 | 2 | Latch-Rubber |
| 6 | 125-8819-03 | 1 | Tube-Frame, Hood |
| 7 | 105-7512 | 2 | Pin-Tie, Bow |
| 8 | 66-6140 | 2 | Decal |
| 9 | 108-1790-03 | 2 | Tube |
| 10 | 32104-17 | 8 | Screw-HWH |

| Ref. | Part Number | Qty. | Description |
|---|---|---|---|
| 11 | 3234-21 | 10 | Screw-HHF |
| 12 | 104-7201 | 10 | Nut-HF, NI |
| 13 | 32105-13 | 4 | Screw-HWH |
| 14 | 3256-14 | 4 | Washer-Flat |
| 15 | 3296-12 | 4 | Nut-Lock, NI |
| 16 | 283-61 | 2 | Pin-Yoke |
| 17 | 107-8042 | 2 | Bumper-Rubber |
| 18 | 98-5398 | 1 | Latch |
| 18:1 | 3218-20 | 1 | Nut-Jam ● |
| 19 | 32104-32 | 4 | Screw-HWH |
| 20 | 104-1453 | 1 | Grommet |
| 22 | 99-4958 | 1 | Spacer |
| 23 | 110-0979-03 | 2 | Bracket-Deflector |

● Not illustrated

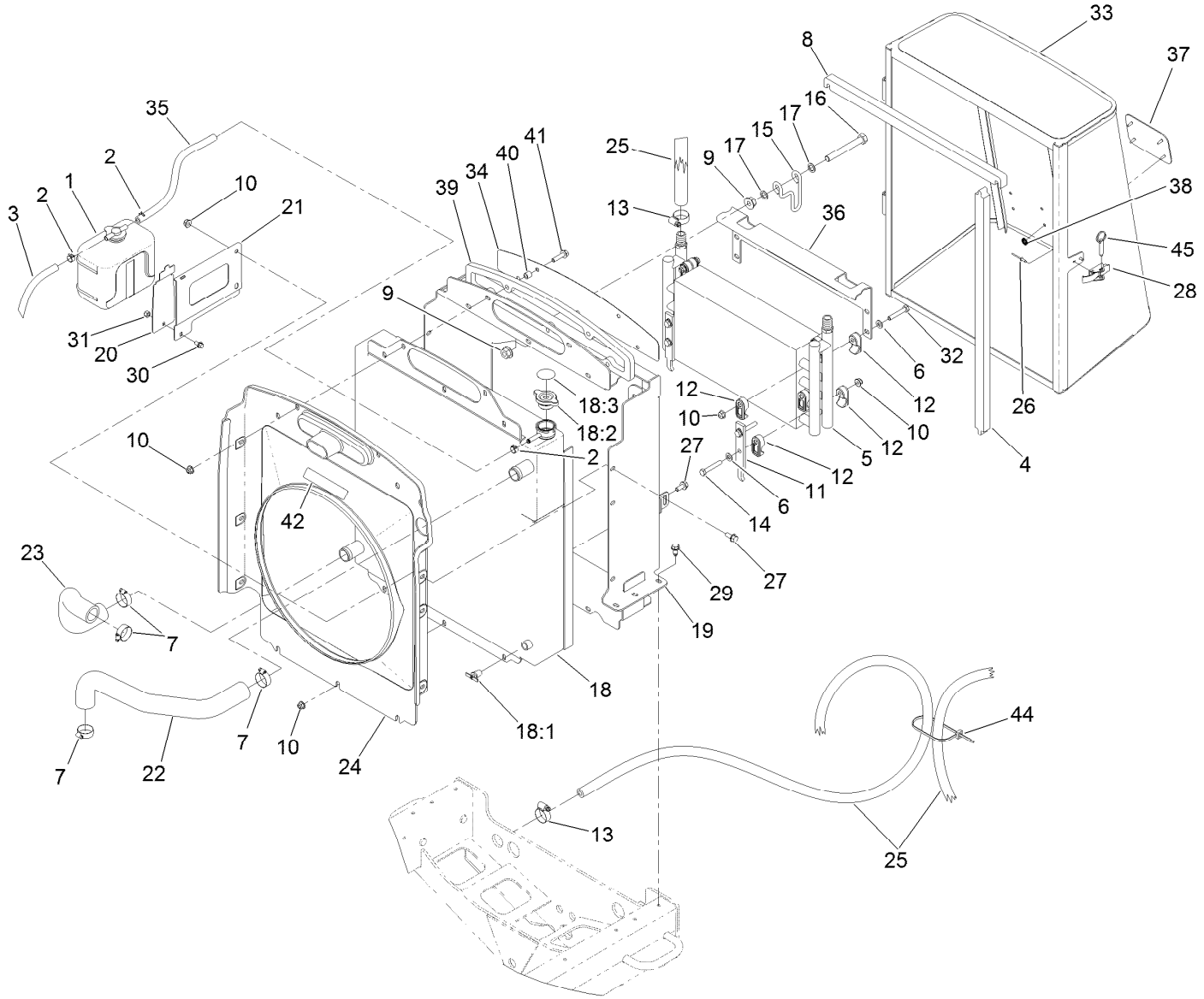


# Cooling System Assembly

| Ref. | Part Number | Qty. | Description |
|---|---|---|---|
| 1 | 108-0638 | 1 | Bottle-Overflow |
| 2 | 92-2379 | 3 | Clamp-Hose |
| 3 | 110-3257 | 1 | Hose-Fuel |
| 4 | 110-0967 | 2 | Seal-Foam |
| 5 | 100-4869 | 1 | Cooler-Oil |
| 6 | 3256-23 | 8 | Washer-Plain |
| 7 | 2412-34 | 4 | Clamp-Hose |
| 8 | 110-0968 | 2 | Seal-Foam |
| 9 | 32128-49 | 4 | Nut-HHF |
| 10 | 104-8300 | 22 | Nut-HF, NI |
| 11 | 104-5460-03 | 2 | Plate-Mount, Oil Cooler |
| 12 | 105-3943 | 16 | Clamp-Cooler, Oil |
| 13 | 2412-129 | 4 | Clamp-Hose |
| 14 | 322-10 | 4 | Screw-HH |
| 15 | 104-5429 | 2 | Clamp-Form, Wire |
| 16 | 325-17 | 2 | Screw-HH |
| 17 | 41-8440 | 4 | Washer |
| 18 | 119-6956 | 1 | Radiator ASM |
| 18:1 | 304-46 | 1 | Draincock |
| 18:2 | 93-5957 | 1 | Cap-Radiator |
| 18:3 | 106-6755 | 1 | Decal-Cap, Radiator |

| Ref. | Part Number | Qty. | Description |
|---|---|---|---|
| 19 | 127-2665-03 | 1 | Frame-Support, Radiator |
| 20 | 108-1665-0P | 1 | Bracket - Reservior |
| 21 | 108-1666-0P | 1 | Bracket - Reservoir |
| 22 | 108-1696 | 1 | Hose-Formed |
| 23 | 108-1697 | 1 | Hose-Formed |
| 24 | 108-1791 | 1 | Shroud-Fan |
| 25 | 108-1693 | 2 | Hose |
| 26 | 3269-15 | 2 | Rivet-Pop |
| 27 | 3234-5 | 9 | Screw-HHF |
| 28 | 115-1554 | 1 | Latch-Draw |
| 29 | 32104-32 | 6 | Screw-HWH |
| 30 | 3234-13 | 1 | Screw-HHF |
| 31 | 3296-42 | 1 | Nut-Lock, NI |
| 32 | 322-21 | 4 | Screw-HH |
| 33 | 110-0952-03 | 1 | Screen ASM |
| 34 | 108-1843-0P | 1 | Screen - Air Intake |
| 35 | 110-4104 | 1 | Hose-Fuel |
| 36 | 107-2043-03 | 1 | Bracket-Oil Cooler, Top |
| 37 | 93-6028 | 1 | Plate-Logo |
| 38 | 138-6996 | 4 | Nut-Push |
| 39 | 110-5324 | 1 | Seal-Foam |

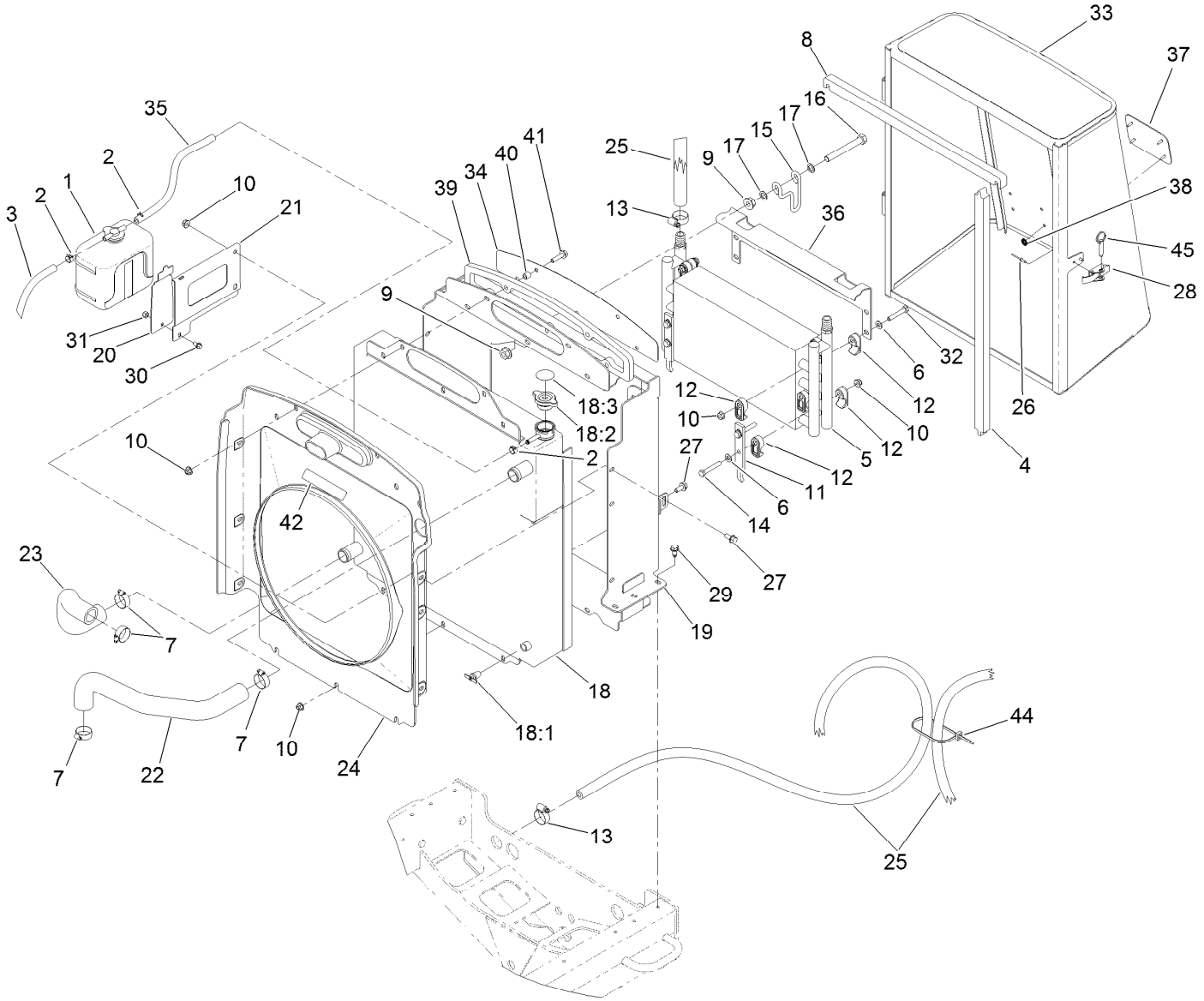


# Cooling System Assembly (continued)

| Ref. | Part Number | Qty. | Description |
|---|---|---|---|
| 40 | 1-603903 | 5 | Spacer |
| 41 | 3234-36 | 5 | Screw-HHF |
| 42 | 93-7272 | 1 | Decal-Warning |

| Ref. | Part Number | Qty. | Description |
|---|---|---|---|
| 44 | 3290-378 | 1 | Tie-Cable |
| 45 | 115-1556 | 1 | Pin-Ball, Detent |

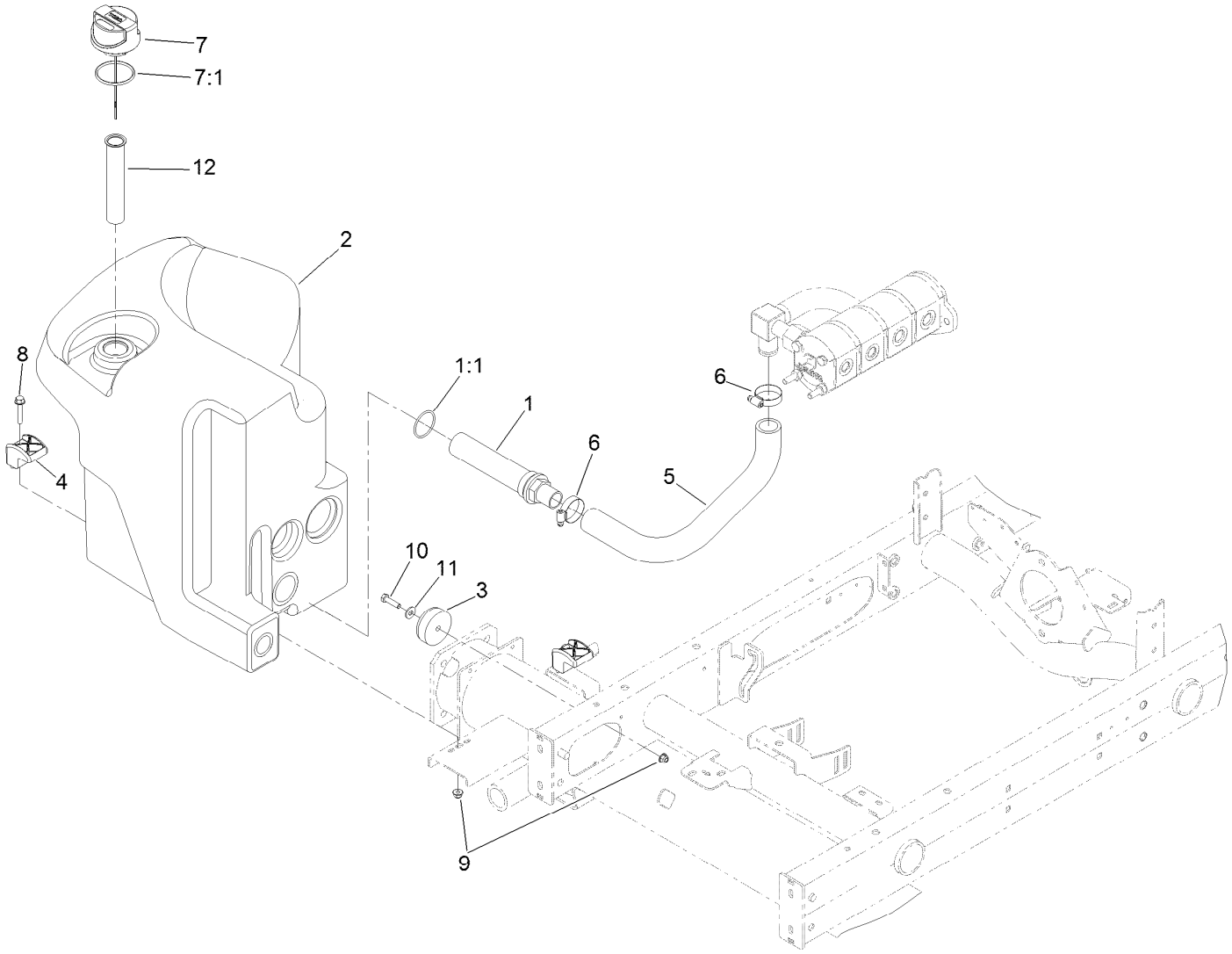


# Hydraulic Tank Assembly

| Ref. | Part Number | Qty. | Description |
|---|---|---|---|
| 1 | 105-0131 | 1 | Strainer-Tank, Oil |
| 1:1 | 340-136 | 1 | O-Ring |
| 2 | 121-5587 | 1 | Tank-Hydraulic |
| 3 | 108-1605 | 1 | Bumper-Recess |
| 4 | 107-4543 | 2 | Clamp |
| 5 | 108-1685 | 1 | Hose-Formed |
| 6 | 2412-3 | 2 | Clamp-Hose |
| 7 | 117-0193 | 1 | Cap-Hydraulic, Vented Breather |
| 7:1 | 237-101 | 1 | O-Ring |
| 8 | 94-5780 | 2 | Screw-HWH |
| 9 | 104-8300 | 3 | Nut-HF, NI |
| 10 | 322-6 | 1 | Screw-HH |
| 11 | 3256-3 | 1 | Washer-Flat |
| 12 | 61-2790 | 1 | Filter-Screen |

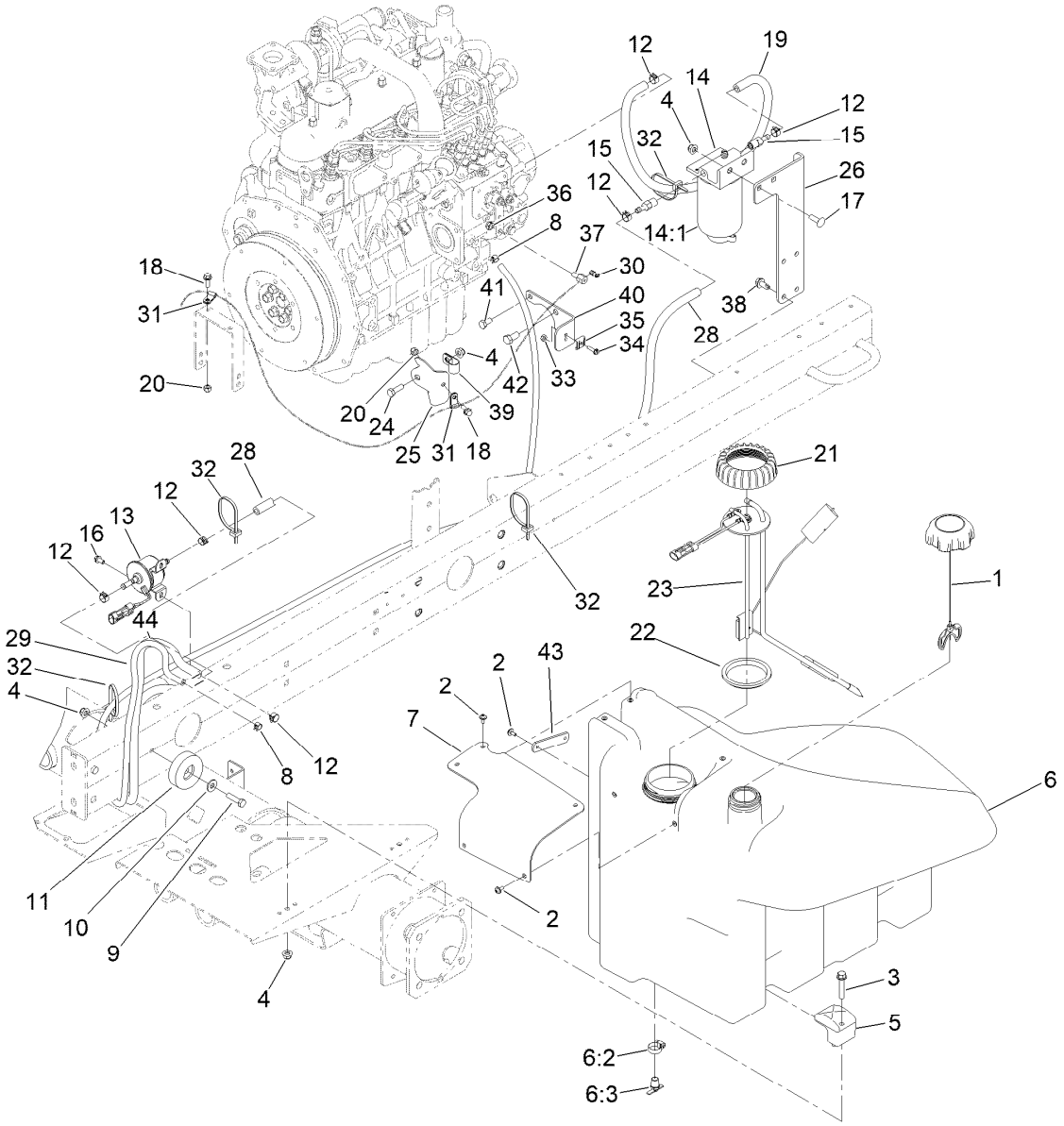


# Fuel System Assembly

| Ref. | Part Number | Qty. | Description |
|---|---|---|---|
| 1 | 117-5894 | 1 | Fuel Cap ASM |
| 2 | 109-2661 | 7 | Screw-PPH |
| 3 | 94-5780 | 2 | Screw-HWH |
| 4 | 104-8300 | 6 | Nut-HF, NI |
| 5 | 107-4543 | 2 | Clamp |
| 6 | 125-2907 | 1 | Fuel Tank ASM |
| 6:2 | 2412-36 | 1 | Clamp-Hose |
| 6:3 | 304-46 | 1 | Draincock |
| 7 | 125-2903 | 1 | Cover-Pump/Sender |
| 8 | 2412-80 | 2 | Clamp-Hose |
| 9 | 322-6 | 1 | Screw-HH |
| 10 | 3256-3 | 1 | Washer-Flat |
| 11 | 108-1605 | 1 | Bumper-Recess |
| 12 | 92-2379 | 6 | Clamp-Hose |
| 13 | 145-3154 | 1 | Pump-Fuel, Electric |
| 14 | 110-9044 | 1 | Separator-Filter |
| 14:1 | 110-9049 | 1 | Filter-Spin On, Fuel/Water |
| 15 | 353-783 | 2 | Fitting-STR |
| 16 | 32144-4 | 1 | Screw-HWH |
| 17 | 3230-22 | 2 | Screw-CARR |
| 18 | 3234-4 | 2 | Screw-HHF |

| Ref. | Part Number | Qty. | Description |
|---|---|---|---|
| 19 | 109-0309 | 1 | Hose-Fuel |
| 20 | 3296-42 | 2 | Nut-Lock, NI |
| 21 | 115-2162 | 1 | Cap-Pump, Fuel |
| 22 | 115-2163 | 1 | Gasket-Pump, Fuel |
| 23 | 121-5642 | 1 | Sender-Fuel |
| 24 | 322-5 | 1 | Screw-HH |
| 25 | 110-9007-0P | 1 | Support - Cable, Throttle |
| 26 | 110-8968-0P | 1 | Mount-Water Separator |
| 28 | 110-3259 | 1 | Hose-Fuel |
| 29 | 125-8808 | 1 | Hose-Fuel |
| 30 | 112-9919 | 1 | Stop-Cable, Throttle |
| 31 | 2412-149 | 2 | Clamp-R |
| 32 | 3290-378 | 5 | Tie-Cable |
| 33 | 3296-2 | 1 | Nut-Lock, NI |
| 34 | 32105-13 | 1 | Screw-HWH |
| 35 | 81-1690 | 1 | Clamp-Cable |
| 36 | 3296-20 | 1 | Nut-Lock, NI |
| 37 | 98-9311 | 1 | Swivel-Throttle |
| 38 | 32104-32 | 4 | Screw-HWH |
| 39 | 2412-41 | 1 | Clamp-R |
| 40 | 110-9009-0P | 1 | Bracket-Cable, Throttle |

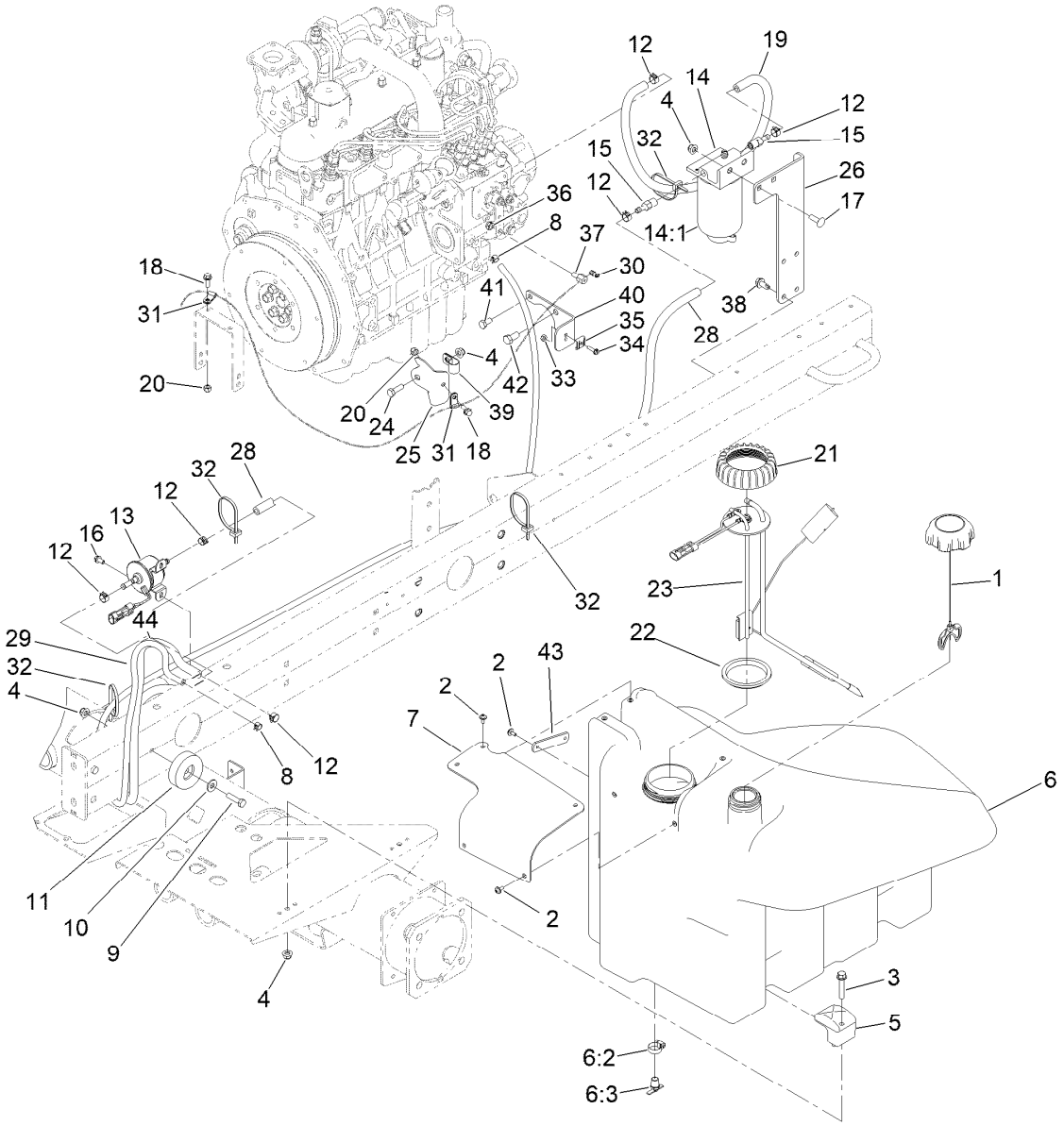


# Fuel System Assembly (continued)

| Ref. | Part Number | Qty. | Description |
|---|---|---|---|
| 41 | 33114-016 | 1 | Screw-HH |
| 42 | 63-7790 | 1 | Screw-Cap |
| 43 | 125-2945 | 1 | Strap-Cable |
| 44 | 110-3258 | 1 | Hose-Fuel |

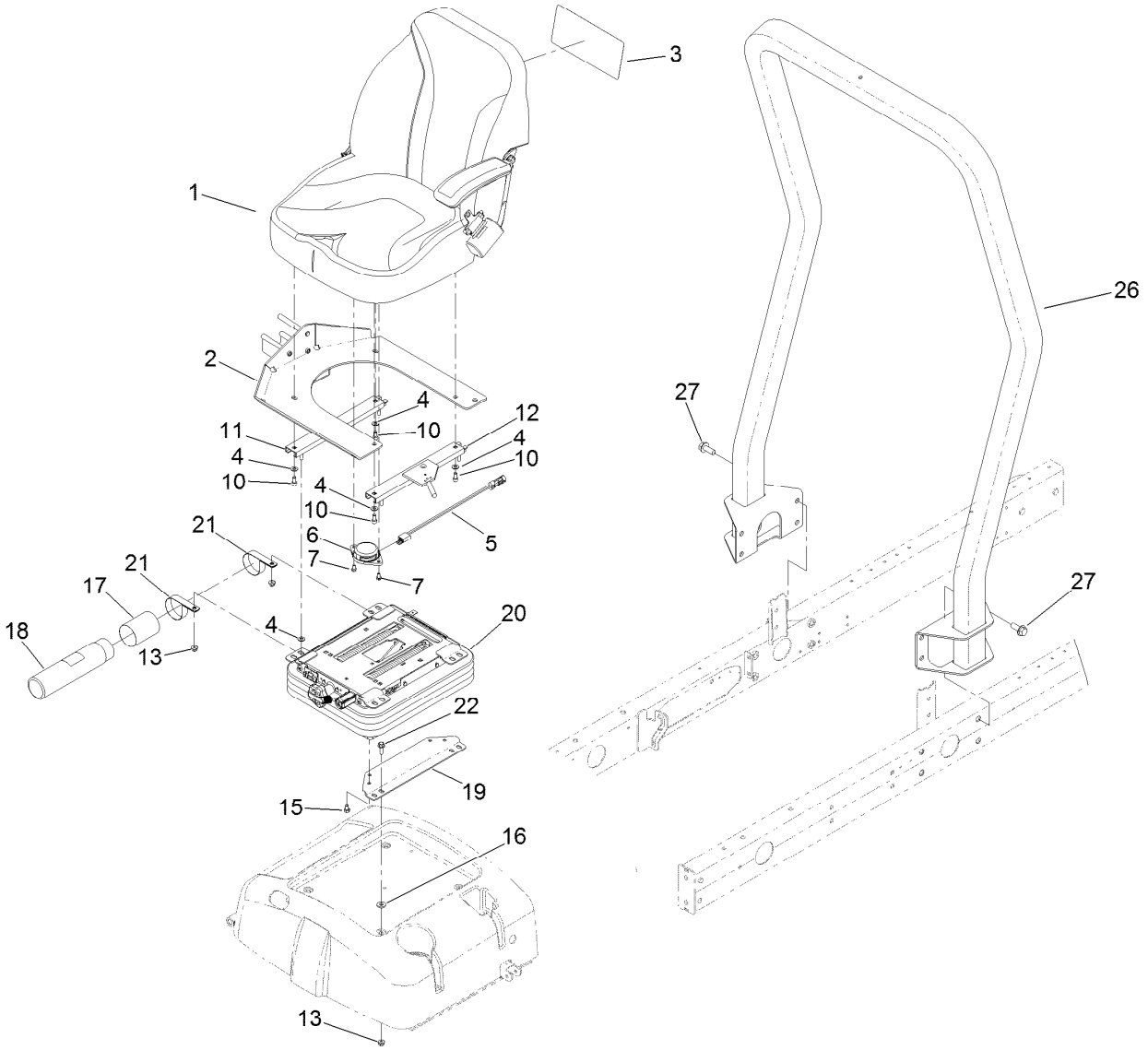


# Seat Mounting Assembly

| Ref. | Part Number | Qty. | Description |
|---|---|---|---|
| 1 | 139-2700 | 1 | Seat ASM |
| 2 | 138-6985-03 | 1 | Mount-Seat |
| 3 | 125-8798 | 1 | Decal-Service, Japanese |
| 3 | 138-6975 | 1 | Decal-Service |
| 4 | 3256-23 | 8 | Washer-Plain |
| 5 | 108-8657 | 1 | Harness-Wire, Seat |
| 6 | 136-9002 | 4 | Spacer-Mounting |
| 7 | 130-7100 | 1 | Trim-Seatbase |
| 10 | 3290-511 | 4 | Screw-HSBH |
| 11 | 92-8990 | 1 | Adjuster-Seat, Non-Locking |
| 12 | 92-8991 | 1 | Adjuster (W/Latch) |
| 13 | 104-8300 | 8 | Nut-HF, NI |

| Ref. | Part Number | Qty. | Description |
|---|---|---|---|
| 15 | 48-7680 | 4 | Screw-HH |
| 16 | 71-9310 | 4 | Spacer |
| 17 | 104-7048 | 1 | Cap-Housing |
| 18 | 104-7050 | 1 | Tube-Manual |
| 19 | 108-6590-0P | 2 | Bracket-Seat, Lower |
| 20 | 110-8851 | 1 | Mechanical Suspension ASM |
| 21 | 2412-133 | 2 | Clamp-R |
| 22 | 3234-17 | 4 | Screw-HHF |
| 26 | 136-7954 | 1 | ROPS ASM |
| 27 | 3234-38 | 8 | Screw-HHF |

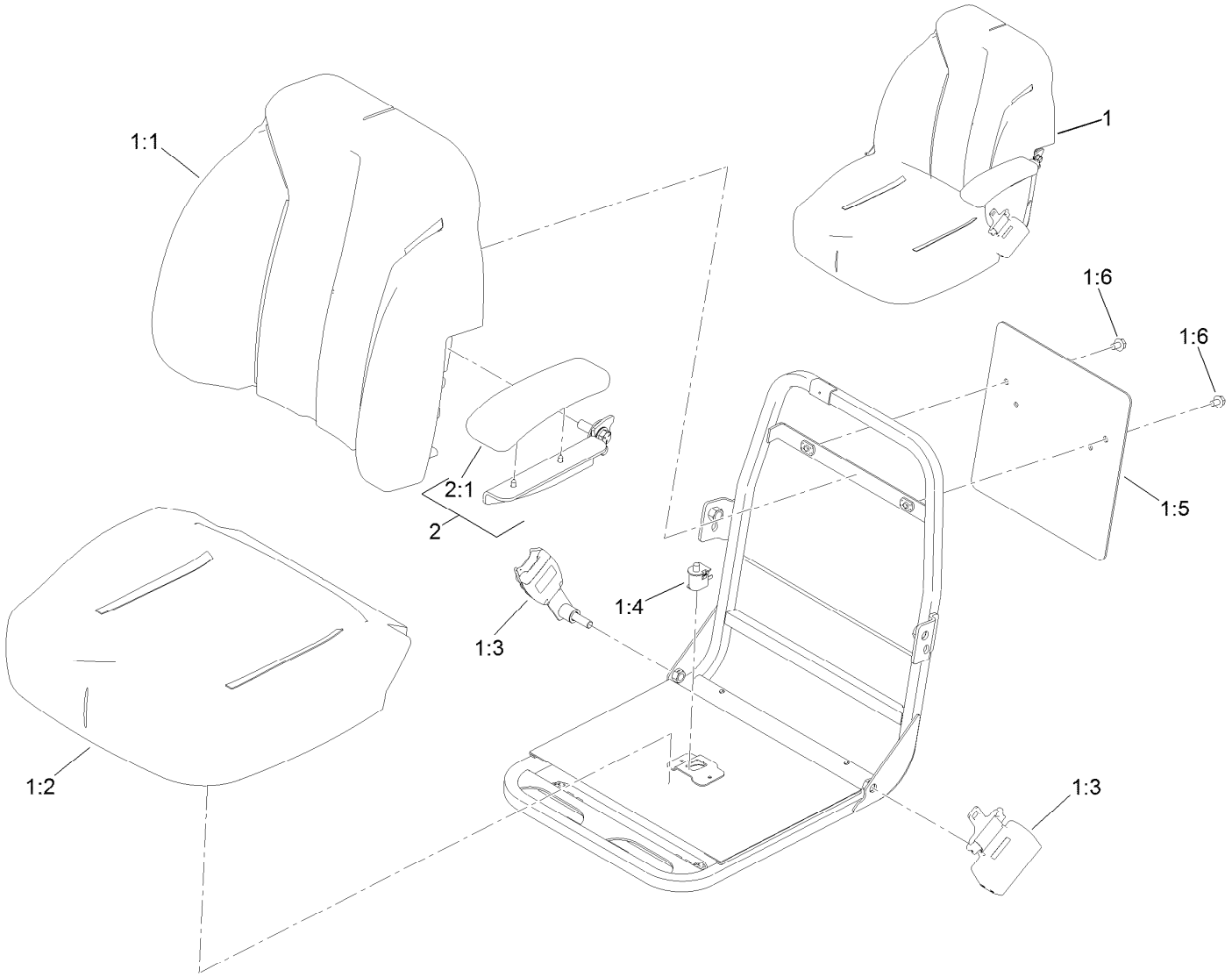


# Seat Assembly No. 139-2700

| *Ref.* | *Part Number* | *Qty.* | *Description* |
|---|---|---|---|
| 1 | 139-2680 | 1 | Seat ASM |
| 1:1 | 145-0083 | 1 | Cover-Seat, Back |
| 1:2 | 145-0084 | 1 | Cover-Seat, Bottom |
| 1:3 | 139-2707 | 1 | Seat Belt Kit |
| 1:4 | 82-2190 | 1 | Switch-Bail |
| 1:5 | 139-2701 | 1 | Plate-Decal |
| 1:6 | 3234-30 | 2 | Screw-HHF |
| 2 | 121-3660 | 1 | LH Arm Rest Kit |
| 2:1 | 110-4163 | 1 | Cushion-Rest, Arm |

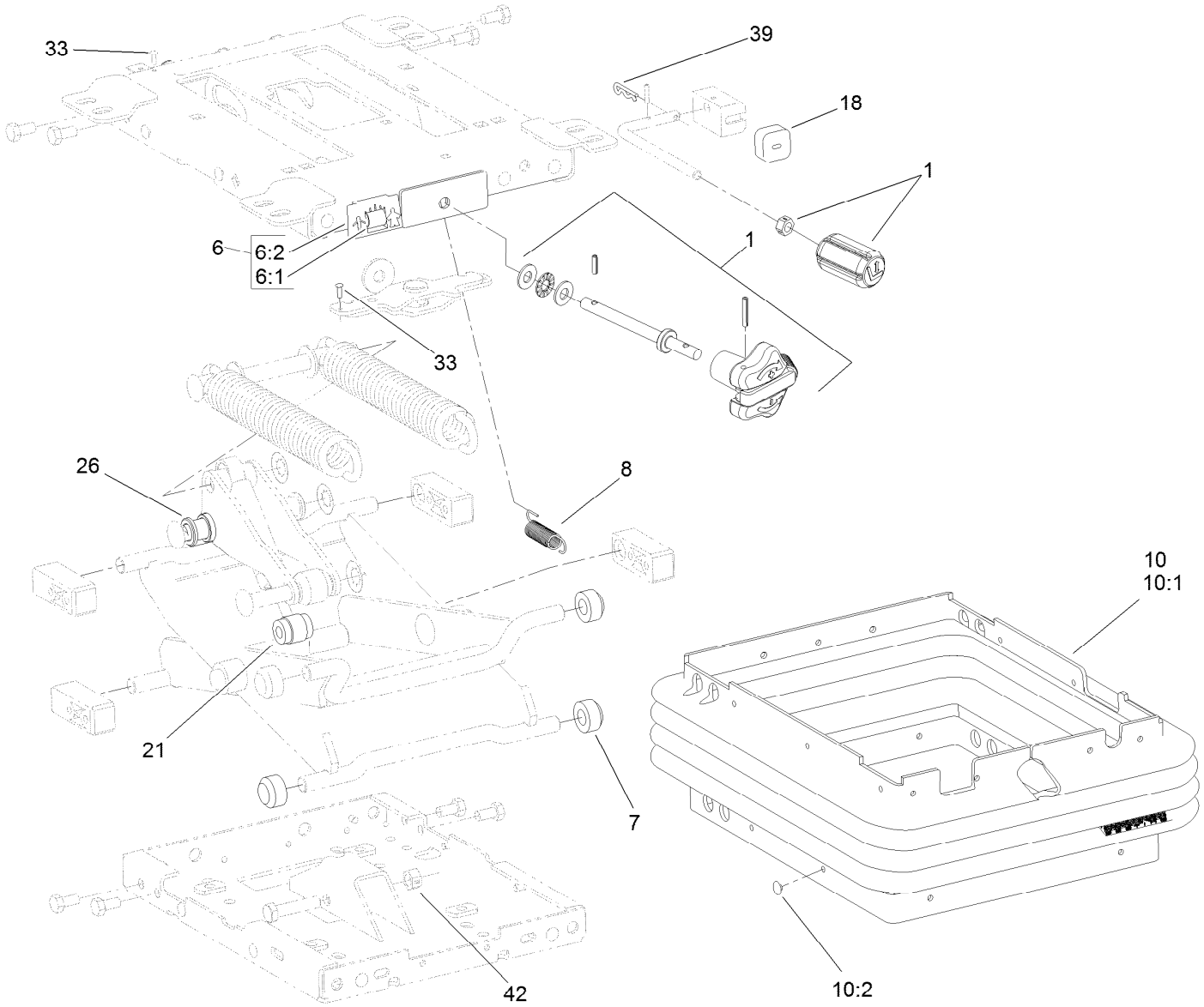


# Mechanical Seat Suspension Assembly No. 110-8851

| Ref. | Part Number | Qty. | Description |
|---|---|---|---|
| 1 | 119-8040 | 1 | Knobs Service Kit |
| 6 | 108-4584 | 1 | Weight Indicator Service Kit |
| 6:1 | | 1 | Tape-Weight Adjust ● |
| 6:2 | | 1 | Guide-Weight Adjust ● |
| 7 | 108-9632 | 4 | Roller |
| 8 | 108-9633 | 1 | Spring-Extension |
| 10 | 112-0164 | 1 | Boot Kit |
| 10:1 | | 1 | Boot-Suspension ● |
| 10:2 | 108-9641 | 21 | Clip-Plug |
| 18 | 108-9634 | 1 | Bumper |
| 21 | 108-9614 | 1 | Damper |
| 26 | 108-9622 | 2 | Tube |
| 33 | 3290-54 | 2 | Rivet-Blind |
| 39 | 3272-9 | 1 | Pin-Cotter |
| 42 | 32152-2 | 1 | Nut-Lock, Cone |

● Not serviced separately

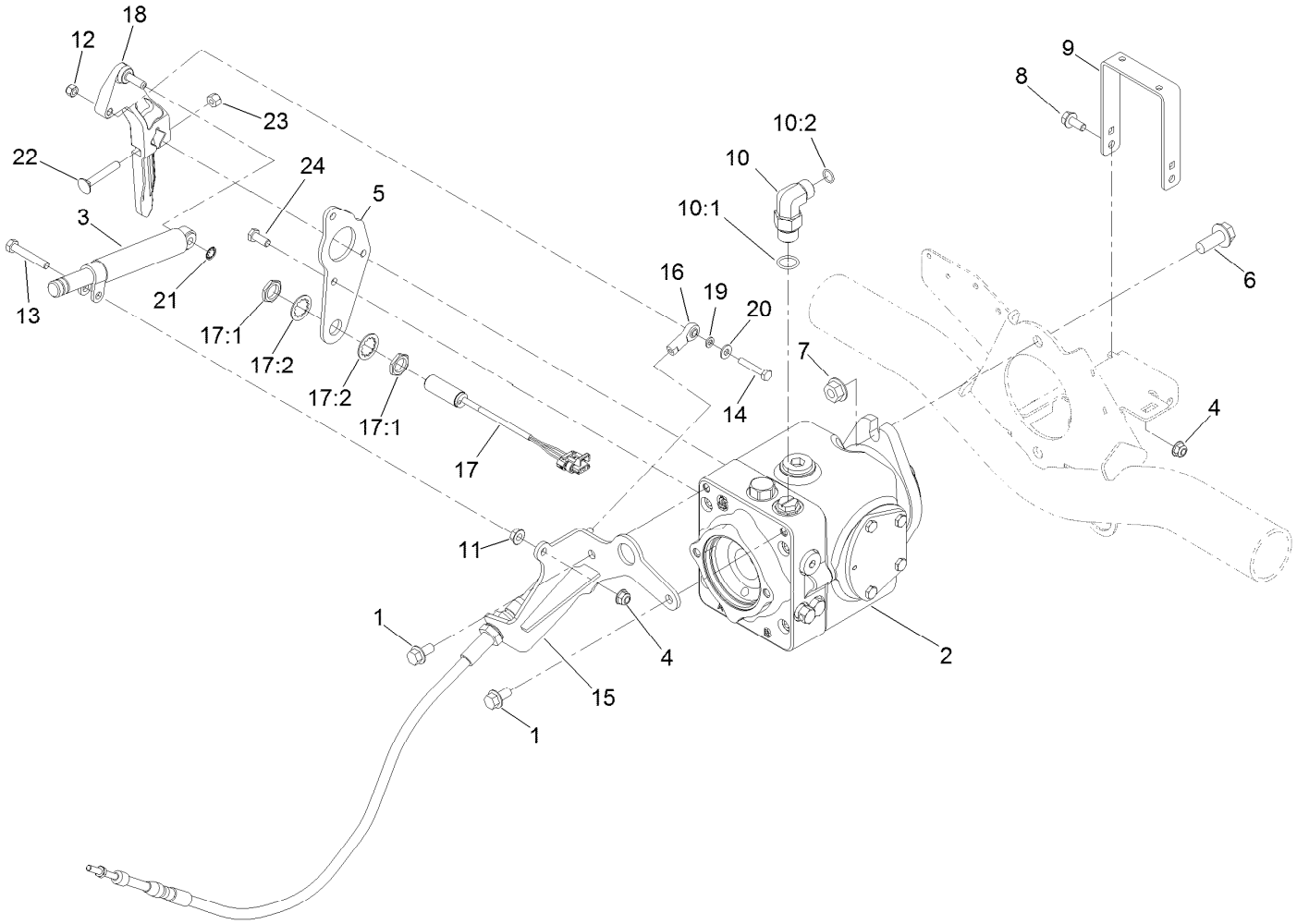


# Traction Pump Mounting Assembly

| Ref. | Part Number | Qty. | Description |
|---|---|---|---|
| 1 | 3234-1 | 2 | Screw-HHF |
| 2 | 119-6972 | 1 | Variable Hydraulic Pump ASM |
| 3 | 140-6248 | 1 | Damper |
| 4 | 104-8300 | 3 | Nut-HF, NI |
| 5 | 125-8822-0P | 1 | Plate-Pump |
| 6 | 3234-38 | 2 | Screw-HHF |
| 7 | 32128-49 | 2 | Nut-HHF |
| 8 | 3234-5 | 2 | Screw-HHF |
| 9 | 108-1799-0P | 1 | Hoop - Guard |
| 10 | 340-105 | 1 | Fitting-Elbow, 90 DEG |
| 10:1 | 237-80 | 1 | O-Ring |
| 10:2 | 237-30 | 1 | O-Ring |
| 11 | 32128-20 | 1 | Nut-HF |
| 12 | 3296-42 | 1 | Nut-Lock, NI |

| Ref. | Part Number | Qty. | Description |
|---|---|---|---|
| 13 | 322-10 | 1 | Screw-HH |
| 14 | 321-9 | 1 | Screw-HH |
| 15 | 127-2356-0P | 1 | Brkt-Cable [primed] |
| 16 | 2411-41 | 1 | Rod End-Ball Joint |
| 17 | 115-5300 | 1 | Proximity Switch ASM |
| 17:1 | 117-3207 | 2 | Nut-Hex |
| 17:2 | 117-3208 | 2 | Washer-Lock, Internal Tooth |
| 18 | 117-0265 | 1 | Lever-Pump |
| 19 | 33093-00 | 1 | Washer-Flat |
| 20 | 3256-22 | 1 | Washer-Flat |
| 21 | 32151-72 | 1 | Ring-Retaining |
| 22 | 3230-6 | 1 | Bolt-CARR |
| 23 | 3296-29 | 1 | Nut-Lock, NI |
| 24 | 33114-020 | 3 | Screw-HH |

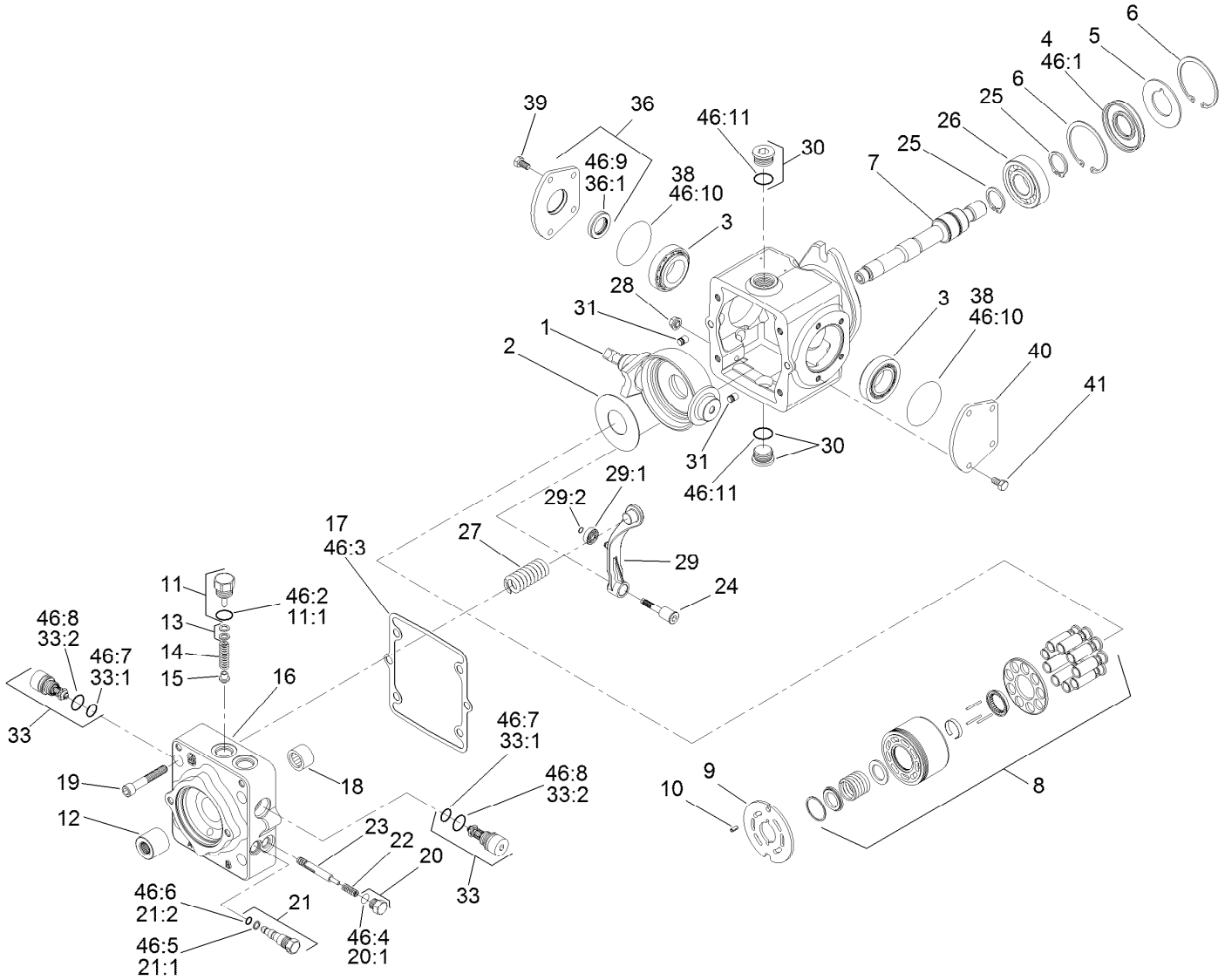


# Hydraulic Pump Assembly No. 119-6972

| Ref. | Part Number | Qty. | Description |
|---|---|---|---|
| 1 | 115-8092 | 1 | Swashplate |
| 2 | 75-0400 | 1 | Plate-Thrust |
| 3 | 110-6483 | 2 | Bearing Kit |
| 4 | 110-6471 | 1 | Seal-Lip |
| 5 | 95-4400 | 1 | Washer-Backup |
| 6 | 69-3200 | 2 | Ring-Retaining |
| 7 | 110-6484 | 1 | Shaft-Auxiliary |
| 8 | 110-6472 | 1 | Cylinder Block Kit ASM |
| 9 | 110-6473 | 1 | Plate-Valve (Clockwise) |
| 10 | 110-6485 | 1 | Pin-Slotted |
| 11 | 110-6486 | 1 | Plug-Relief, Charge |
| 11:1 | 28-3570 | 1 | O-Ring |
| 12 | 110-6480 | 1 | Coupling |
| 13 | 92-1353 | 1 | Shim Kit |
| 14 | 110-6474 | 1 | Spring |
| 15 | 110-6475 | 1 | Poppet |
| 16 | 115-8087 | 1 | Cap-End |
| 17 | 110-6476 | 1 | Gasket-Cap, End |

| Ref. | Part Number | Qty. | Description |
|---|---|---|---|
| 18 | 75-0500 | 1 | Bearing-Needle |
| 19 | 110-6489 | 4 | Screw |
| 20 | 94-9415 | 2 | Plug ASM |
| 20:1 | | 1 | O-Ring ■ |
| 21 | 107-4364 | 1 | Bypass Valve ASM |
| 21:1 | 25-2630 | 1 | Ring-Back Up |
| 21:2 | 110-6498 | 1 | O-Ring |
| 22 | 110-6491 | 2 | Spring |
| 23 | 110-6492 | 1 | Spool-Loop, Flush |
| 24 | 110-6493 | 1 | Pivot-Return, Neutral |
| 25 | 69-3170 | 2 | Ring-Retaining |
| 26 | 75-0460 | 1 | Bearing-Ball |
| 27 | 115-8085 | 1 | Spring-Neutral Return |
| 28 | 110-6496 | 1 | Nut-Seal |
| 29 | 110-6497 | 1 | Neutral Return Arm ASM |
| 29:1 | 110-6494 | 1 | Bearing-Cam |
| 29:2 | 110-3056 | 1 | Ring-Retaining |
| 30 | 69-3130 | 2 | Plug |

● Not illustrated

■ Not serviced separately

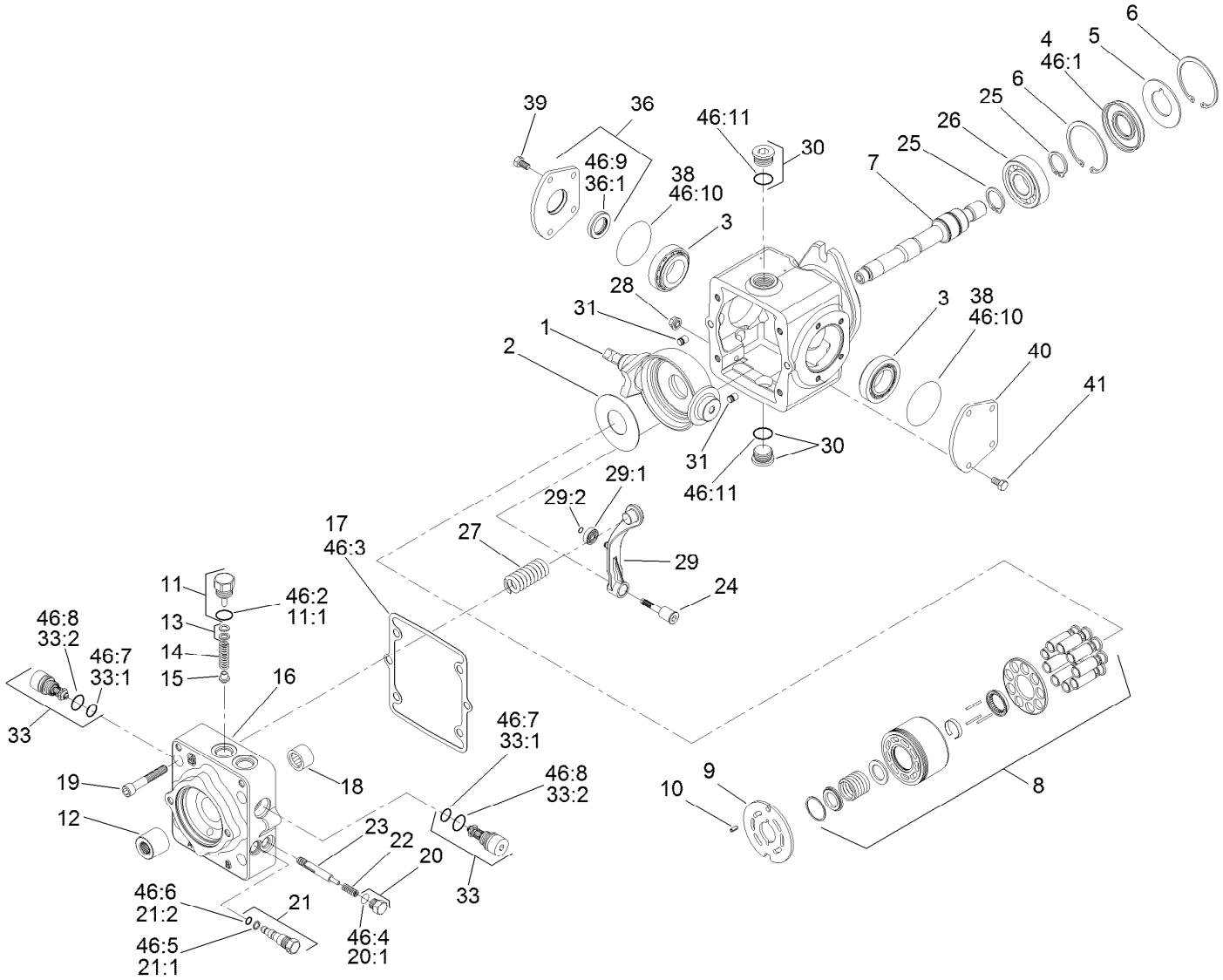


# Hydraulic Pump Assembly No. 119-6972 (continued)

| Ref. | Part Number | Qty. | Description |
|---|---|---|---|
| 31 | 112-0158 | 2 | Pin |
| 33 | 110-6477 | 2 | Valve-Relief |
| 33:1 | 75-0240 | 1 | O-Ring ● |
| 33:2 | 84-0560 | 1 | O-Ring ● |
| 36 | 110-6499 | 1 | Trunnion Cover ASM |
| 36:1 | 110-6478 | 1 | Seal-Lip |
| 38 | 84-0430 | 2 | O-Ring |
| 39 | 112-0150 | 4 | Screw |
| 40 | 84-0440 | 1 | Cover-Trunnion |
| 41 | 112-0151 | 4 | Screw |
| 46 | 110-6481 | 1 | Seal Kit ● |

| Ref. | Part Number | Qty. | Description |
|---|---|---|---|
| 46:1 | 110-6471 | 1 | Seal-Lip |
| 46:2 | 28-3570 | 1 | O-Ring |
| 46:3 | 110-6476 | 1 | Gasket-Cap, End |
| 46:4 | 131-8631 | 2 | O-Ring |
| 46:5 | 25-2630 | 1 | Ring-Back Up |
| 46:6 | 110-6498 | 1 | O-Ring |
| 46:7 | 75-0240 | 2 | O-Ring |
| 46:8 | 84-0560 | 2 | O-Ring |
| 46:9 | 110-6478 | 1 | Seal-Lip |
| 46:10 | 84-0430 | 2 | O-Ring |
| 46:11 | 131-8614 | 2 | O-Ring |

● Not illustrated

■ Not serviced separately

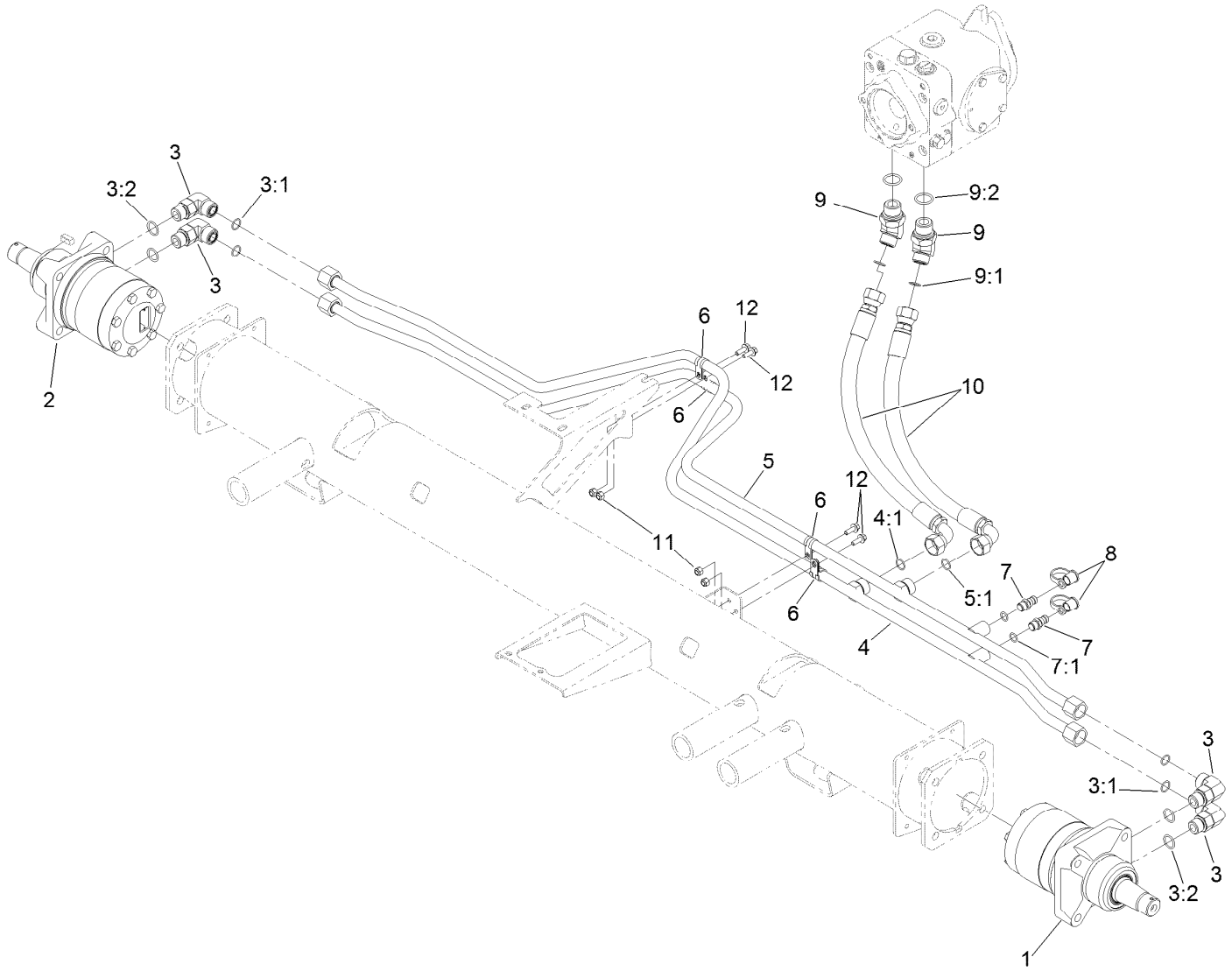


# Traction Hydraulic Assembly

| Ref. | Part Number | Qty. | Description |
|---|---|---|---|
| 1 | 133-2935 | 1 | Hydraulic Motor ASM |
| 2 | 133-2934 | 1 | Hydraulic Motor ASM |
| 3 | 340-17 | 4 | Fitting-Elbow, 90 DEG |
| 3:1 | 237-65 | 1 | O-Ring |
| 3:2 | 237-80 | 1 | O-Ring |
| 4 | 108-7632 | 1 | Tube ASM |
| 4:1 | 237-65 | 1 | O-Ring |
| 5 | 108-7633 | 1 | Tube ASM |
| 5:1 | 237-65 | 1 | O-Ring |
| 6 | 2412-134 | 4 | Clamp-R |

| Ref. | Part Number | Qty. | Description |
|---|---|---|---|
| 7 | 59-7410 | 2 | Fitting-Diagnostic |
| 7:1 | 237-42 | 1 | O-Ring |
| 8 | 354-79 | 2 | Cap-Dust |
| 9 | 340-156 | 2 | Fitting-Elbow 45 |
| 9:1 | 237-65 | 1 | O-Ring |
| 9:2 | 237-81 | 1 | O-Ring |
| 10 | 108-1679 | 2 | Hose-HYD |
| 11 | 3296-42 | 4 | Nut-Lock, NI |
| 12 | 3234-4 | 4 | Screw-HHF |

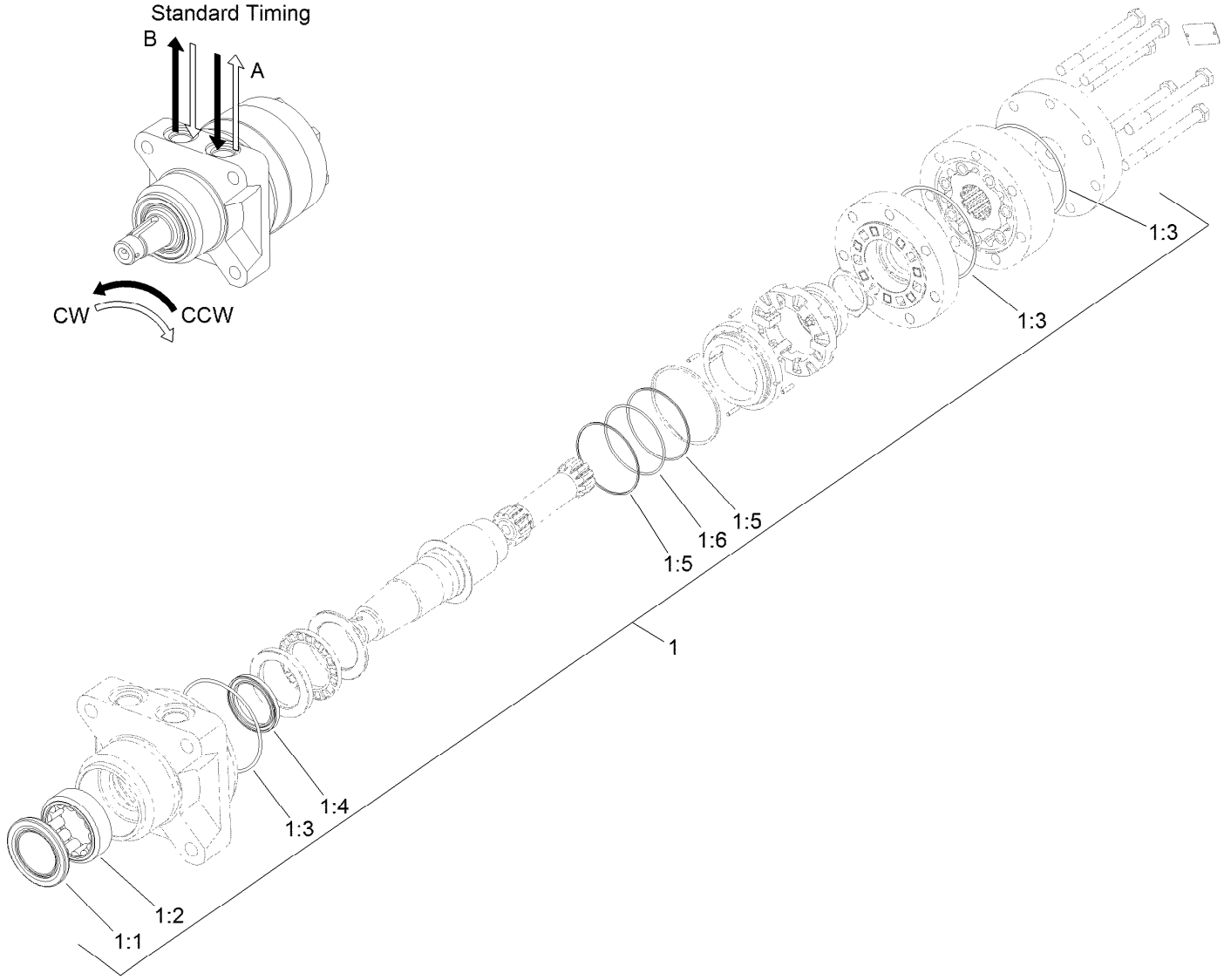


# Hydraulic Motor Assembly No. 133-2935 (CCW)

| *Ref.* | *Part Number* | *Qty.* | *Description* |
|---|---|---|---|
| 1 | 120-6268 | 1 | Seal Kit |
| 1:1 | | 1 | Seal-Grease ● |
| 1:2 | | 1 | Shell-Bearing ● |
| 1:3 | | 3 | O-Ring ● |
| 1:4 | | 1 | Seal-Shaft ● |
| 1:5 | | 2 | Ring-Back Up ● |
| 1:6 | | 1 | O-Ring ● |

● Not serviced separately

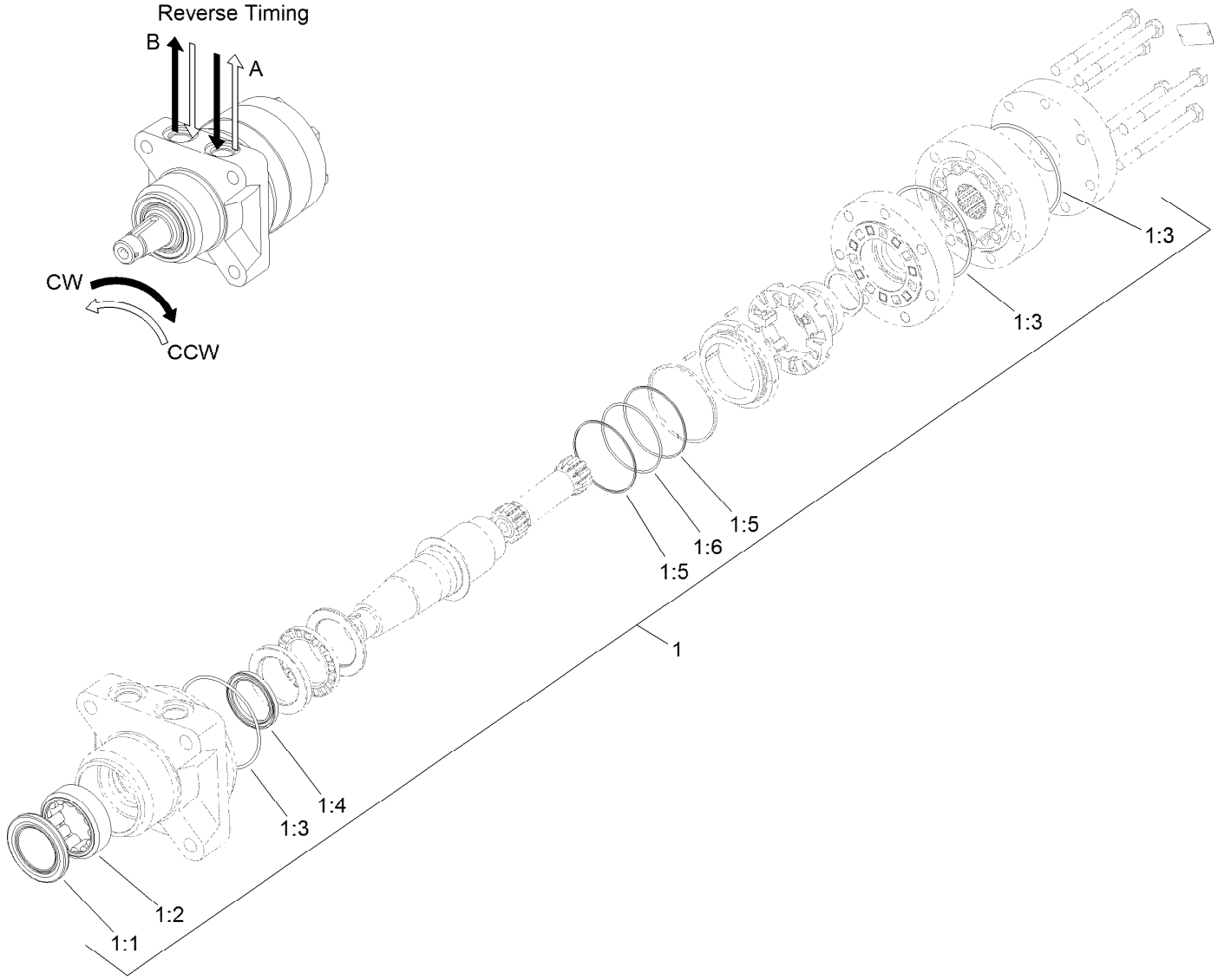


# Hydraulic Motor Assembly No. 133-2934 (CW)

| *Ref.* | *Part Number* | *Qty.* | *Description* |
|---|---|---|---|
| 1 | 120-6268 | 1 | Seal Kit |
| 1:1 | | 1 | Seal-Grease ● |
| 1:2 | | 1 | Shell-Bearing ● |
| 1:3 | | 3 | O-Ring ● |
| 1:4 | | 1 | Seal-Shaft ● |
| 1:5 | | 2 | Ring-Back Up ● |
| 1:6 | | 1 | O-Ring ● |

● Not serviced separately

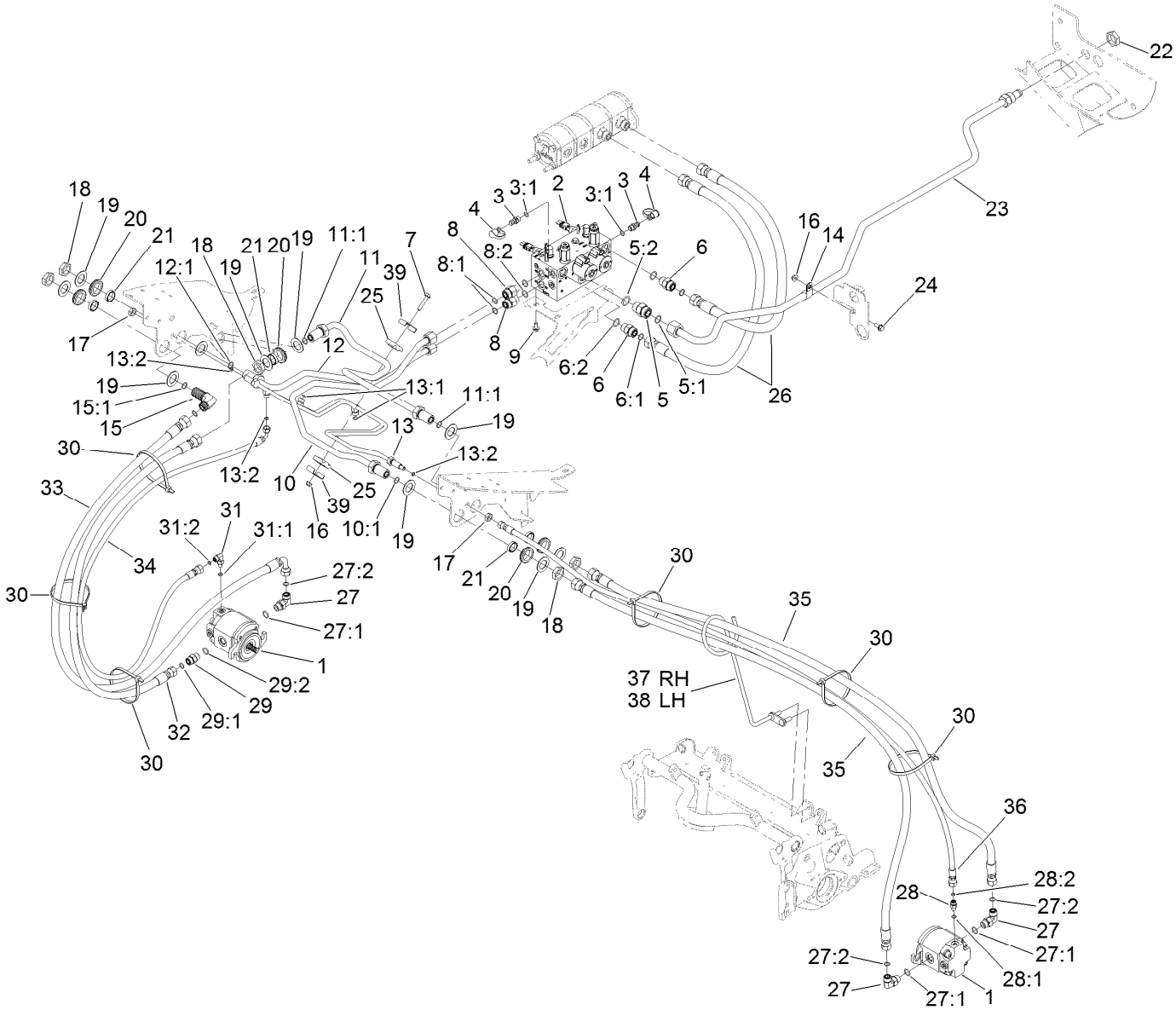


# No. 1, 4 and 5 Reel Drive Hydraulic Assembly

| Ref. | Part Number | Qty. | Description |
|---|---|---|---|
| 1 | 120-6272 | 3 | HYD Motor ASM |
| 2 | 121-5628 | 1 | Hydraulic Manifold ASM |
| 3 | 59-7410 | 2 | Fitting-Diagnostic |
| 3:1 | 237-42 | 1 | O-Ring |
| 4 | 354-79 | 2 | Cap-Dust |
| 5 | 340-9 | 1 | Fitting-STR |
| 5:1 | 237-58 | 1 | O-Ring |
| 5:2 | 237-81 | 1 | O-Ring |
| 6 | 340-7 | 2 | Fitting-Straight |
| 6:1 | 237-65 | 1 | O-Ring |
| 6:2 | 237-80 | 1 | O-Ring |
| 7 | 94-5780 | 1 | Screw-HWH |
| 8 | 340-155 | 2 | Fitting-Straight |
| 8:1 | 237-79 | 1 | O-Ring |
| 8:2 | 237-151 | 1 | O-Ring |
| 9 | 3234-14 | 3 | Screw-HHF |
| 10 | 117-0138 | 1 | Tube ASM |
| 10:1 | 237-65 | 1 | O-Ring |
| 11 | 117-0137 | 1 | Tube ASM |
| 11:1 | 237-65 | 2 | O-Ring |
| 12 | 117-0139 | 1 | Tube ASM |

| Ref. | Part Number | Qty. | Description |
|---|---|---|---|
| 12:1 | 237-65 | 1 | O-Ring |
| 13 | 110-5286 | 1 | Tube ASM |
| 13:1 | 237-22 | 2 | O-Ring |
| 13:2 | 237-21 | 3 | O-Ring |
| 14 | 2412-4 | 1 | Clamp-R |
| 15 | 340-72 | 1 | Fitting-Bulkhead, 90 DEG |
| 15:1 | 237-65 | 2 | O-Ring |
| 16 | 104-8300 | 2 | Nut-HF, NI |
| 17 | 340-78 | 2 | Nut-Lock |
| 18 | 340-74 | 5 | Nut-Lock, Bulkhead |
| 19 | 69-9010 | 10 | Washer |
| 20 | 240-3 | 5 | Grommet-Rubber |
| 21 | 125-1984 | 5 | Spacer |
| 22 | 340-126 | 1 | Nut-Bulkhead |
| 23 | 108-1700 | 1 | Tube ASM |
| 24 | 3234-5 | 1 | Screw-HHF |
| 25 | 56-7970 | 2 | Clamp-Tube |
| 26 | 108-1686 | 2 | Hose-HYD |
| 27 | 340-98 | 5 | Fitting-Elbow, 90 DEG |
| 27:1 | 237-79 | 1 | O-Ring |
| 27:2 | 237-30 | 1 | O-Ring |

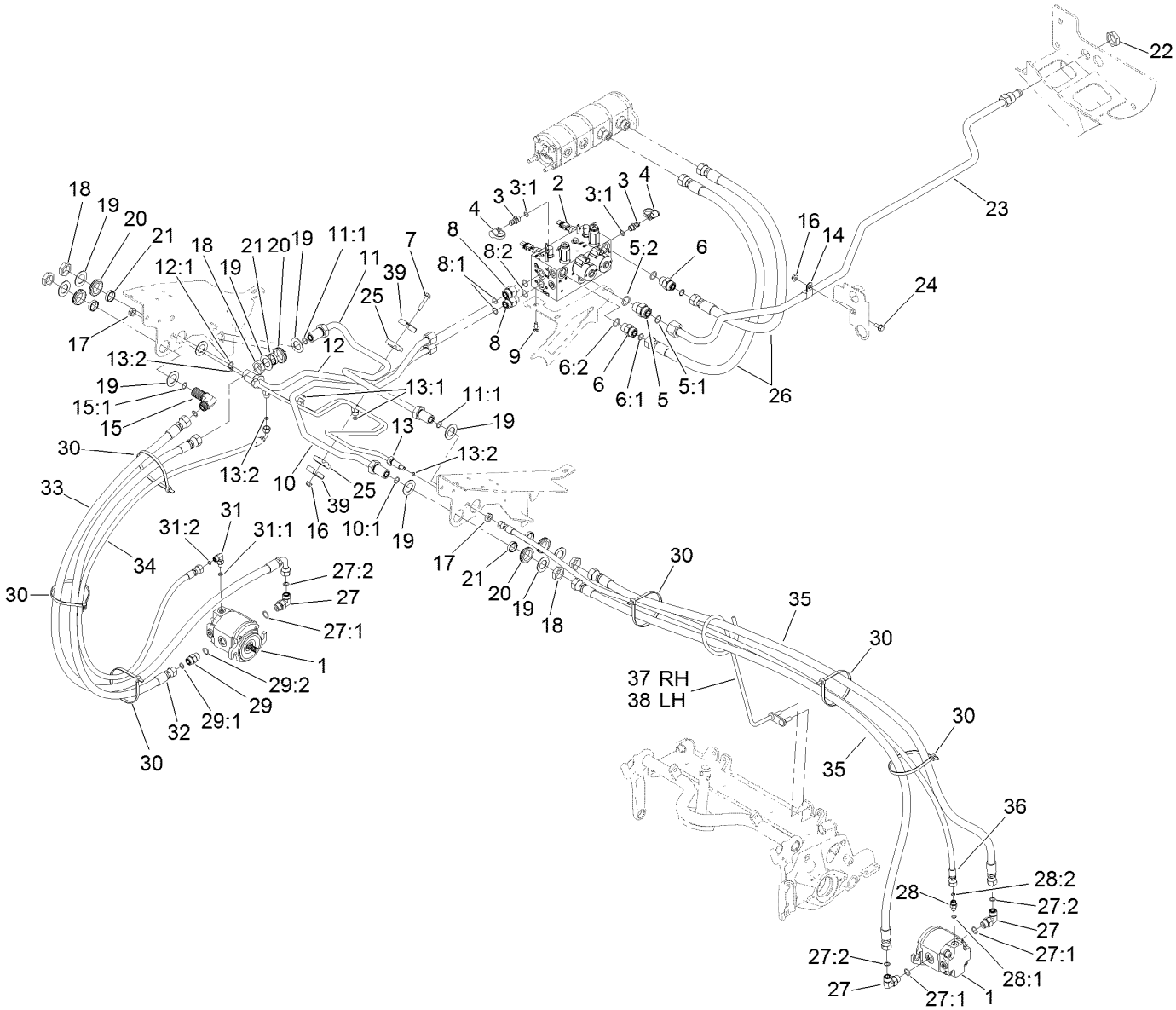


# No. 1, 4 and 5 Reel Drive Hydraulic Assembly (continued)

| Ref. | Part Number | Qty. | Description |
|---|---|---|---|
| 28 | 340-92 | 2 | Fitting-Straight |
| 28:1 | 237-78 | 1 | O-Ring |
| 28:2 | 237-21 | 1 | O-Ring |
| 29 | 340-4 | 1 | Fitting-Straight |
| 29:1 | 237-30 | 1 | O-Ring |
| 29:2 | 237-79 | 1 | O-Ring |
| 30 | 3334-945 | 9 | Tie-Cable |
| 31 | 340-132 | 1 | Fitting-Elbow, 90 DEG |
| 31:1 | 237-78 | 1 | O-Ring |

| Ref. | Part Number | Qty. | Description |
|---|---|---|---|
| 31:2 | 237-21 | 1 | O-Ring |
| 32 | 114-0633 | 1 | Hose-HYD |
| 33 | 117-5190 | 1 | Hose-HYD |
| 34 | 106-3671 | 1 | Hose-HYD |
| 35 | 117-5188 | 4 | Hose-HYD |
| 36 | 106-3680 | 2 | Hose-HYD |
| 37 | 139-5995 | 1 | Guide-Hose, RH |
| 38 | 139-5996 | 1 | Hose Guide ASM-LH |
| 39 | 119-1419 | 2 | Plate-Clamp |

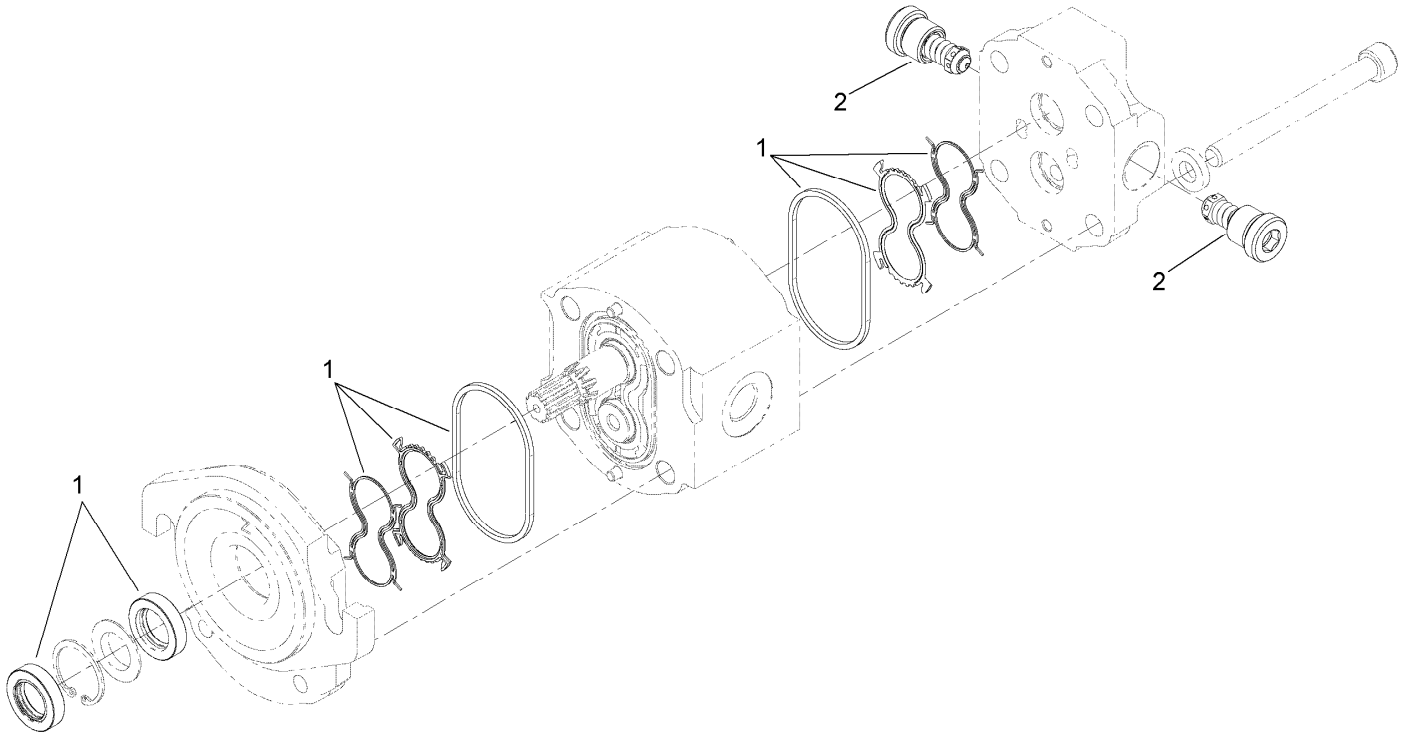


# Hydraulic Motor Assembly No. 120-6272

| *Ref.* | *Part Number* | *Qty.* | *Description* |
|---|---|---|---|
| 1 | 138-1234 | 1 | Seal Kit |
| 2 | 117-5107 | 1 | Valve-Check |

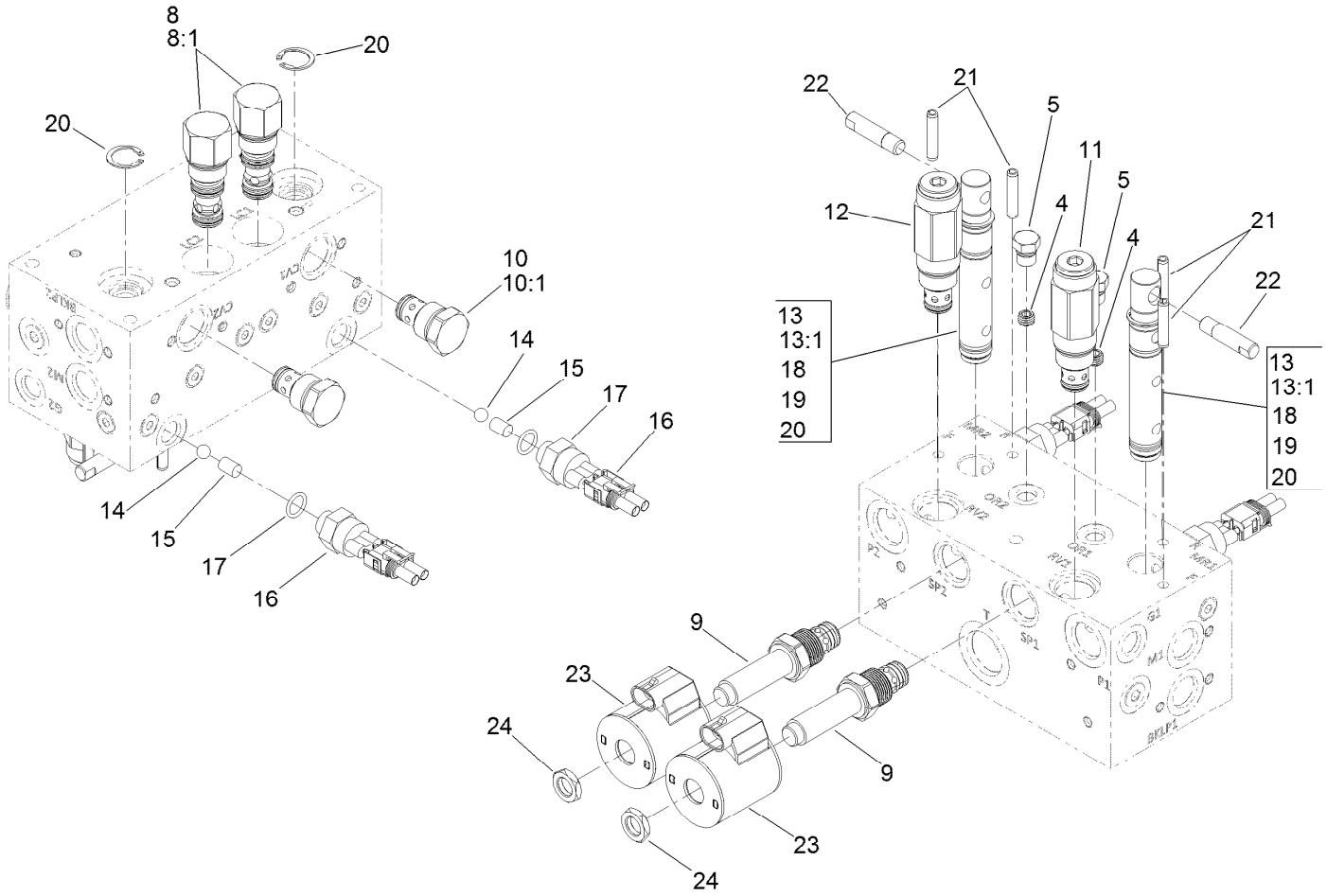


# Manifold Assembly No. 121-5628

| Ref. | Part Number | Qty. | Description |
|---|---|---|---|
| 4 | 110-8883 | 1 | Plug-Orifice (0.040) |
| 5 | 117-0115 | 1 | Plug |
| 8 | 120-1693 | 2 | Compensator-Pressure |
| 8:1 | 119-2159 | 1 | Seal Kit |
| 9 | 138-6961 | 2 | Valve-Proportional, NC |
| 10 | 110-8881 | 2 | Valve-Check |
| 10:1 | 105-9159 | 1 | Seal Kit ● |
| 11 | 138-6962 | 1 | Valve-Relief, 2500 PSI |
| 12 | 138-6963 | 1 | Valve-Relief, 3500 PSI |
| 13 | 117-0108 | 2 | Spool-Rotary |
| 13:1 | 117-0109 | 1 | Seal Kit |

| Ref. | Part Number | Qty. | Description |
|---|---|---|---|
| 14 | 117-4605 | 2 | Ball-SS |
| 15 | 120-1650 | 2 | Pin |
| 16 | 72-4310 | 2 | Switch-Ball |
| 17 | 110-8757 | 2 | O-Ring |
| 18 | 117-4606 | 6 | O-Ring |
| 19 | 112-6534 | 4 | Ring-Back Up |
| 20 | 112-6532 | 4 | Ring-Retaining |
| 21 | 112-6531 | 4 | Pin-Spring |
| 22 | 110-8758 | 2 | Handle-Spool |
| 23 | 110-6344 | 2 | Coil-12V, DC |
| 24 | 110-2634 | 2 | Nut-Coil |

● Not illustrated

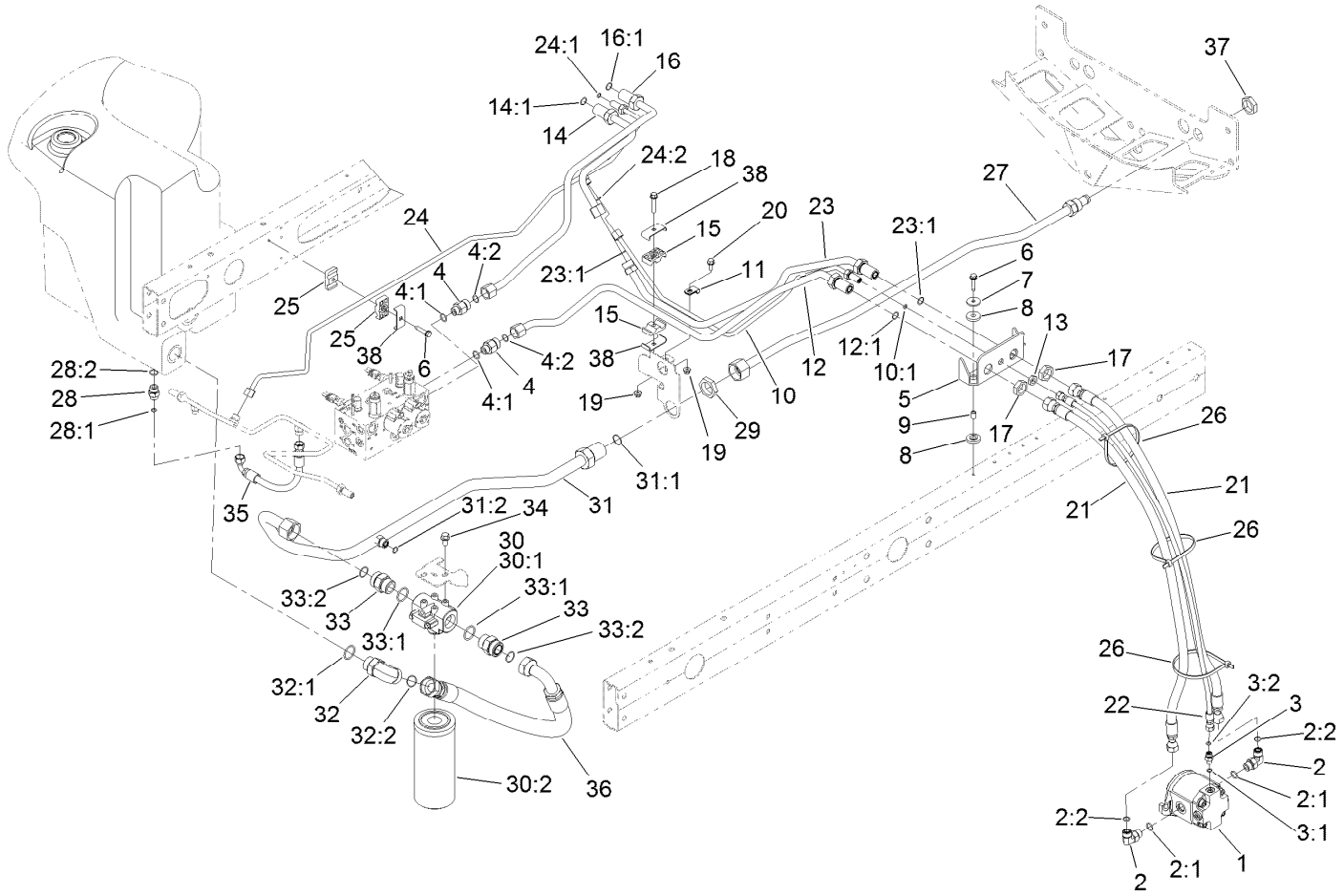


# No. 2 and 3 Reel Drive Hydraulic Assembly

| Ref. | Part Number | Qty. | Description |
|---|---|---|---|
| 1 | 120-6272 | 2 | HYD Motor ASM |
| 2 | 340-98 | 4 | Fitting-Elbow, 90 DEG |
| 2:1 | 237-79 | 1 | O-Ring |
| 2:2 | 237-30 | 1 | O-Ring |
| 3 | 340-92 | 2 | Fitting-Straight |
| 3:1 | 237-78 | 1 | O-Ring |
| 3:2 | 237-21 | 1 | O-Ring |
| 4 | 340-155 | 2 | Fitting-Straight |
| 4:1 | 237-79 | 1 | O-Ring |
| 4:2 | 237-151 | 1 | O-Ring |
| 5 | 117-0174-03 | 2 | Bracket-Bulkhead |
| 6 | 32144-57 | 5 | Screw |
| 7 | 105-3048 | 4 | Washer-Flat |
| 8 | 240-11 | 8 | Bushing-Flange |
| 9 | 99-8611 | 4 | Spacer |
| 10 | 114-8887 | 1 | Tube ASM |
| 10:1 | 237-21 | 1 | O-Ring |
| 11 | 2412-113 | 1 | Clamp-R |
| 12 | 117-0142 | 1 | Tube ASM |
| 12:1 | 237-65 | 1 | O-Ring |
| 13 | 340-78 | 2 | Nut-Lock |

| Ref. | Part Number | Qty. | Description |
|---|---|---|---|
| 14 | 117-0140 | 1 | Tube ASM |
| 14:1 | 237-65 | 1 | O-Ring |
| 15 | 56-7971 | 2 | Clamp-Tube |
| 16 | 117-0141 | 1 | Tube ASM |
| 16:1 | 237-65 | 1 | O-Ring |
| 17 | 340-74 | 4 | Nut-Lock, Bulkhead |
| 18 | 94-5780 | 1 | Screw-HWH |
| 19 | 104-8300 | 2 | Nut-HF, NI |
| 20 | 3234-5 | 1 | Screw-HHF |
| 21 | 114-0633 | 4 | Hose-HYD |
| 22 | 98-4590 | 2 | Hose-HYD |
| 23 | 117-0177 | 1 | Tube ASM |
| 23:1 | 237-65 | 2 | O-Ring |
| 24 | 114-8888 | 1 | Tube ASM |
| 24:1 | 237-22 | 1 | O-Ring |
| 24:2 | 237-21 | 1 | O-Ring |
| 25 | 56-7972 | 2 | Clamp-Tube |
| 26 | 3334-945 | 6 | Tie-Cable |
| 27 | 108-1691 | 1 | Tube ASM |
| 28 | 340-3 | 1 | Fitting-Straight |
| 28:1 | 237-22 | 1 | O-Ring |

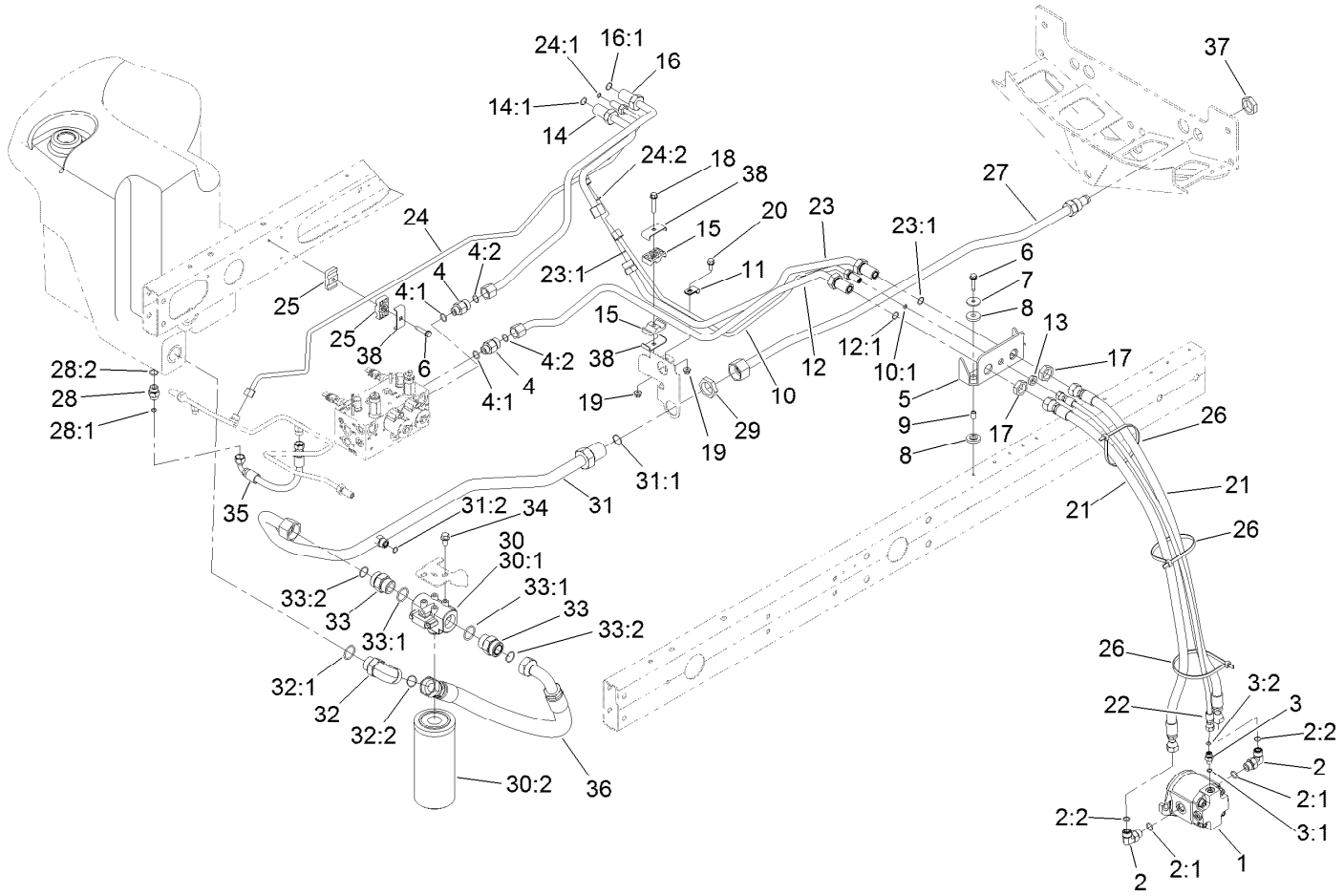


# No. 2 and 3 Reel Drive Hydraulic Assembly (continued)

| Ref. | Part Number | Qty. | Description |
|---|---|---|---|
| 28:2 | 237-79 | 1 | O-Ring |
| 29 | 340-128 | 1 | Nut-Bulkhead |
| 30 | 98-3923 | 1 | Oil Filter ASM |
| 30:1 | 104-0080 | 1 | Filter Head ASM |
| 30:2 | 94-2621 | 1 | Element-Filter |
| 31 | 108-1699 | 1 | Tube ASM |
| 31:1 | 340-65 | 1 | O-Ring |
| 31:2 | 237-30 | 1 | O-Ring |
| 32 | 340-129 | 1 | Fitting-Elbow, 90 DEG |
| 32:1 | 237-146 | 1 | O-Ring |
| 32:2 | 340-65 | 1 | O-Ring |
| 33 | 104-3797 | 2 | Fitting-Straight |
| 33:1 | 237-146 | 1 | O-Ring |
| 33:2 | 340-65 | 1 | O-Ring |
| 34 | 3234-1 | 2 | Screw-HHF |
| 35 | 66-8490 | 1 | Hose-HYD |
| 36 | 108-1689 | 1 | Hose-HYD |
| 37 | 340-126 | 1 | Nut-Bulkhead |
| 38 | 119-1419 | 2 | Plate-Clamp |

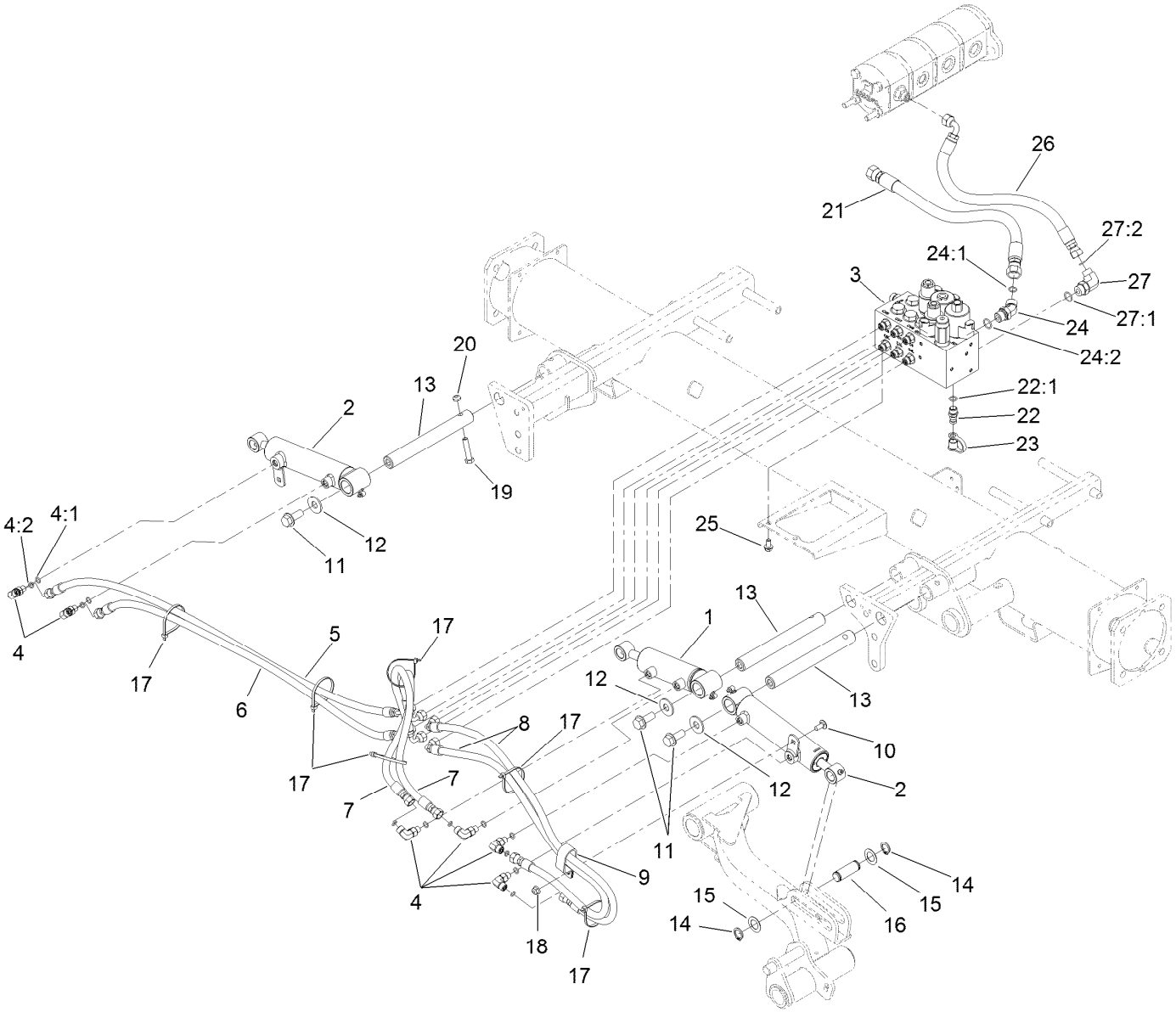


# No. 1, 4 and 5 Lift Arm Hydraulic Assembly

| Ref. | Part Number | Qty. | Description |
|---|---|---|---|
| 1 | 138-6999 | 1 | HYD Cylinder ASM |
| 2 | 119-6987 | 2 | HYD Cylinder ASM |
| 3 | 105-7577 | 1 | HYD Lift Block Manifold ASM |
| 4 | 340-132 | 6 | Fitting-Elbow, 90 DEG |
| 4:1 | 237-78 | 1 | O-Ring |
| 4:2 | 237-21 | 1 | O-Ring |
| 5 | 106-3692 | 1 | Hose-HYD |
| 6 | 106-3693 | 1 | Hose-HYD |
| 7 | 93-6887 | 2 | Hose-HYD |
| 8 | 85-4940 | 2 | Hose-HYD |
| 9 | 2412-137 | 1 | Clamp-R, Double |
| 10 | 3230-23 | 1 | Bolt-CARR |
| 11 | 3234-38 | 3 | Screw-HHF |
| 12 | 3256-6 | 3 | Washer-Flat |
| 13 | 117-0148 | 3 | Pin-Cylinder |
| 14 | 32120-93 | 6 | Ring-Retaining |
| 15 | 3-6498 | 6 | Washer-Thrust |

| Ref. | Part Number | Qty. | Description |
|---|---|---|---|
| 16 | 104-0046 | 3 | Pin-Slide, Cylinder |
| 17 | 3290-379 | 6 | Tie-Cable |
| 18 | 104-8300 | 1 | Nut-HF, NI |
| 19 | 323-9 | 3 | Screw-HH |
| 20 | 3296-59 | 3 | Nut-Lock, NI |
| 21 | 117-0180 | 1 | Hose-HYD |
| 22 | 59-7410 | 1 | Fitting-Diagnostic |
| 22:1 | 237-42 | 1 | O-Ring |
| 23 | 354-79 | 1 | Cap-Dust |
| 24 | 340-101 | 1 | Fitting-HYD, 45 DEG |
| 24:1 | 237-30 | 1 | O-Ring |
| 24:2 | 237-79 | 1 | O-Ring |
| 25 | 3234-14 | 2 | Screw-HHF |
| 26 | 92-5694 | 1 | Hose-Hydraulic |
| 27 | 340-18 | 1 | Fitting-HYD, 90 DEG |
| 27:1 | 237-79 | 1 | O-Ring |
| 27:2 | 237-22 | 1 | O-Ring |

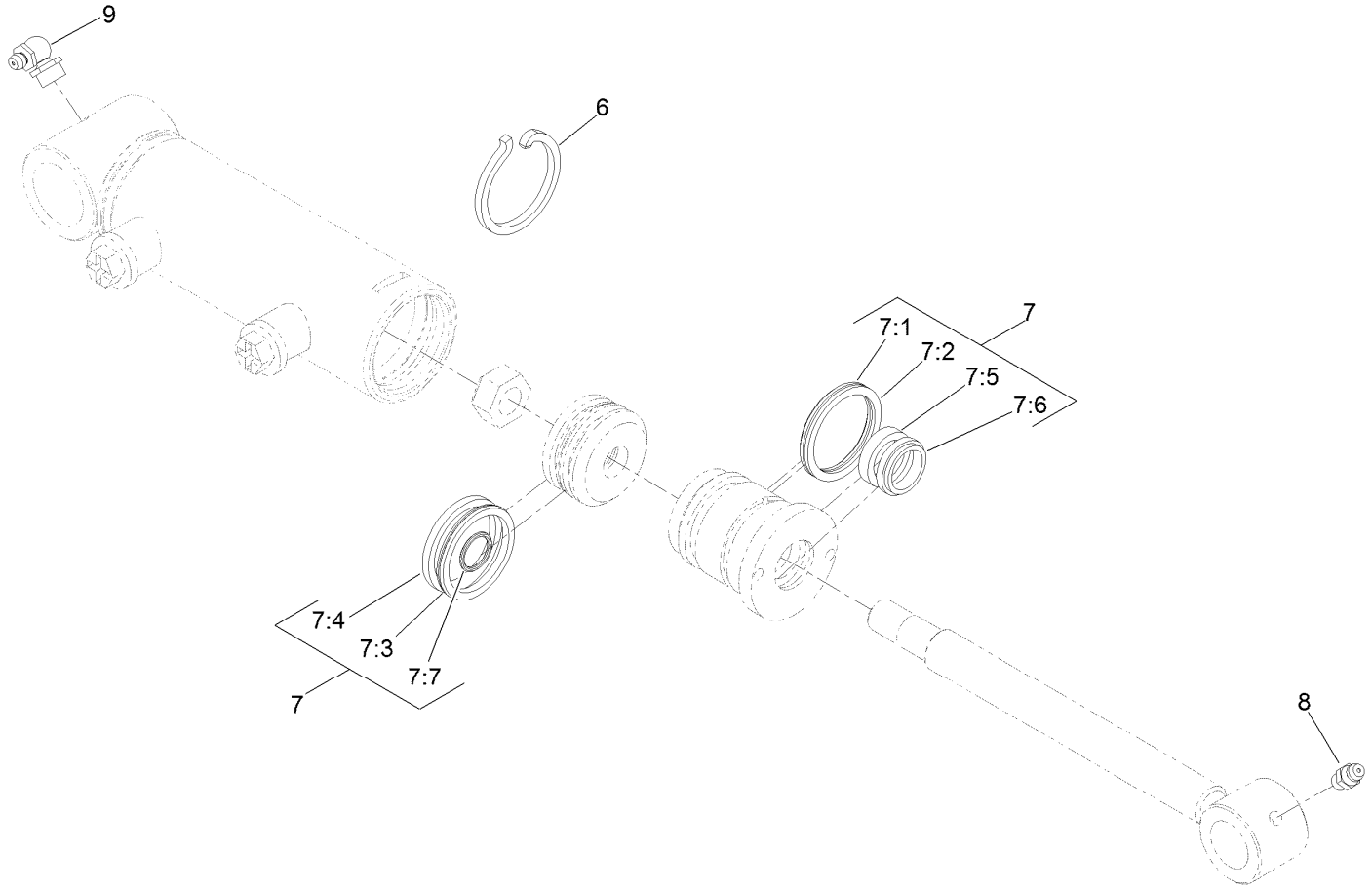


# Hydraulic Cylinder Assembly No. 138-6999

| *Ref.* | *Part Number* | *Qty.* | *Description* |
|---|---|---|---|
| 6 | 84-1680 | 1 | Ring-Retaining |
| 7 | 133-2900 | 1 | Seal Kit |
| 7:1 | | 1 | O-Ring ● |
| 7:2 | | 1 | Backup ● |
| 7:3 | | 1 | Bp Seal ● |
| 7:4 | | 1 | Wear Ring-Ht ● |
| 7:5 | | 1 | Bt Seal ● |
| 7:6 | | 1 | Dust Seal-Dt ● |
| 7:7 | | 1 | O-Ring ● |
| 8 | 302-5 | 1 | Fitting-Grease |
| 9 | 302-33 | 1 | Fitting-Grease |

● Not serviced separately

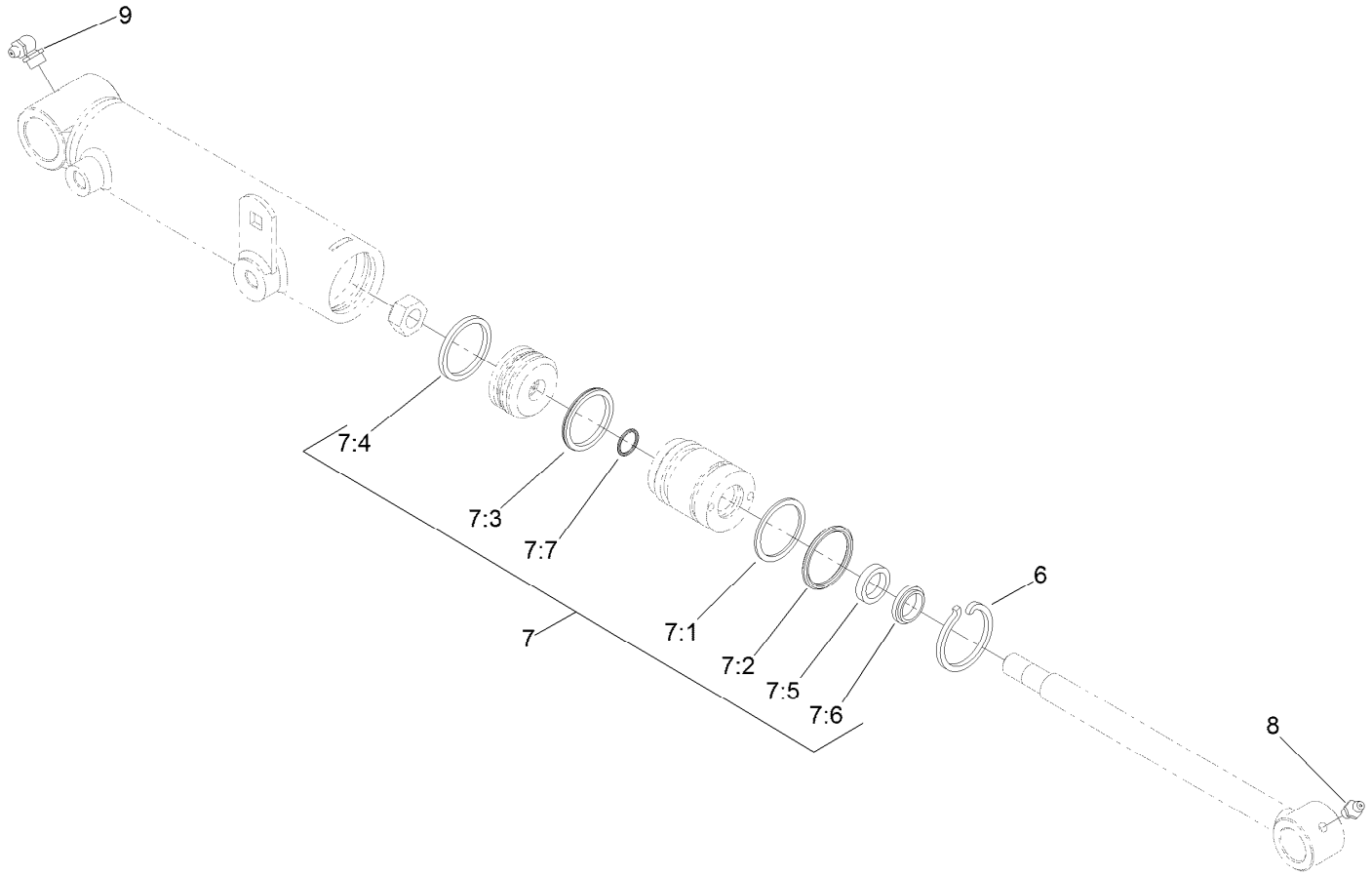


# Hydraulic Cylinder Assembly No. 119-6987

| *Ref.* | *Part Number* | *Qty.* | *Description* |
|---|---|---|---|
| 6 | 84-1680 | 1 | Ring-Retaining |
| 7 | 133-2900 | 1 | Seal Kit |
| 7:1 | | 1 | O-Ring ● |
| 7:2 | | 1 | Backup ● |
| 7:3 | | 1 | Bp Seal ● |
| 7:4 | | 1 | Wear Ring-Ht ● |
| 7:5 | | 1 | Bt Seal ● |
| 7:6 | | 1 | Dust Seal-Dt ● |
| 7:7 | | 1 | O-Ring ● |
| 8 | 302-5 | 1 | Fitting-Grease |
| 9 | 302-60 | 1 | Fitting-Grease |

● Not serviced separately

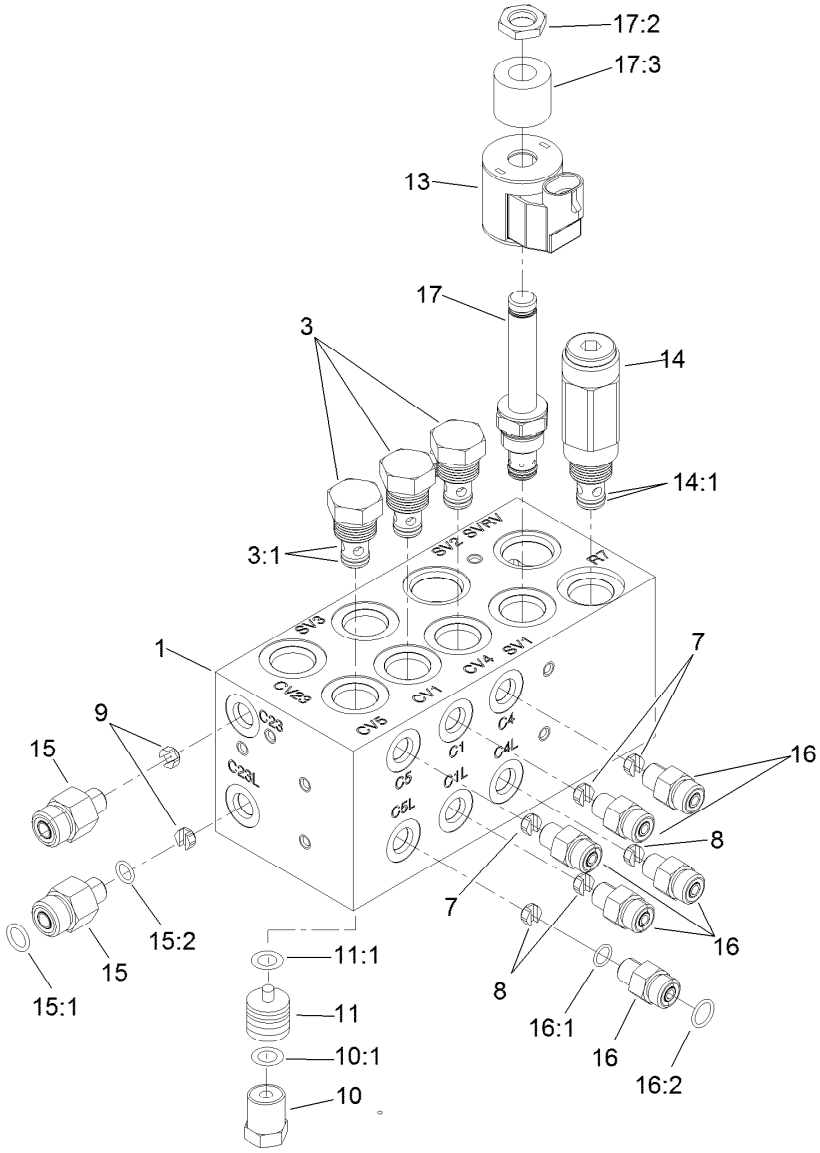


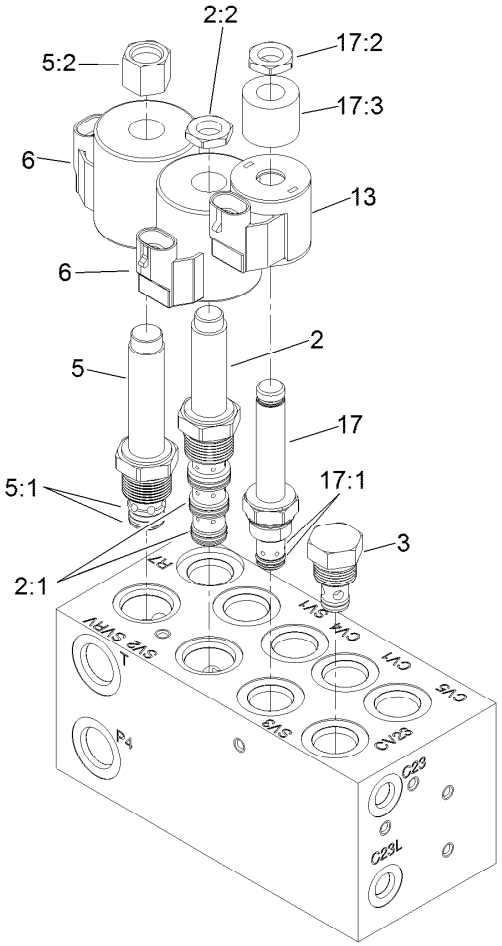


# Hydraulic Manifold Block Assembly No. 105-7577

| Ref. | Part Number | Qty. | Description |
|---|---|---|---|
| 1 | | 1 | Block-Manifold ■ |
| 2 | 110-8906 | 1 | Valve-Solenoid |
| 2:1 | 110-8908 | 1 | Spool Valve Seal Kit |
| 2:2 | 110-2634 | 1 | Nut-Coil |
| 3 | 110-9006 | 4 | Valve-Check |
| 3:1 | 105-9156 | 1 | Seal Kit |
| 5 | 110-8905 | 1 | Valve-Relief, Solenoid |
| 5:1 | 110-6316 | 1 | Seal Kit |
| 5:2 | 130-8180 | 1 | Nut-Coil (9/16-24 Unef-2B) |
| 6 | 110-6344 | 2 | Coil-12V, DC |
| 7 | 110-8904 | 3 | Orifice-Control, Flow (0.028) |
| 7 | 125-8849 | 3 | Orifice-Flow Control ● |
| 8 | 110-8903 | 3 | Orifice-Control, Flow (0.055) |
| 9 | 110-8902 | 2 | Orifice-Control, Flow (0.046) |
| 10 | 354-70 | 4 | Plug-Hex, Hollow |
| 10:1 | 237-80 | 1 | O-Ring |

| Ref. | Part Number | Qty. | Description |
|---|---|---|---|
| 11 | 110-8901 | 4 | Piston-Pilot |
| 11:1 | 110-8900 | 1 | O-Ring |
| 13 | 110-0497 | 2 | Coil-Solenoid |
| 14 | 110-8899 | 1 | Valve-Relief |
| 14:1 | 105-9156 | 1 | Seal Kit |
| 15 | 340-88 | 2 | Fitting-Straight |
| 15:1 | 237-22 | 1 | O-Ring |
| 15:2 | 237-78 | 1 | O-Ring |
| 16 | 340-92 | 6 | Fitting-Straight |
| 16:1 | 237-78 | 1 | O-Ring |
| 16:2 | 237-21 | 1 | O-Ring |
| 17 | 110-8898 | 2 | Valve-Solenoid |
| 17:1 | 107-7527 | 1 | Seal Kit |
| 17:2 | 110-2634 | 1 | Nut-Coil |
| 17:3 | 110-8909 | 1 | Spacer-Coil |

● Optional Equipment

■ Not serviced separately

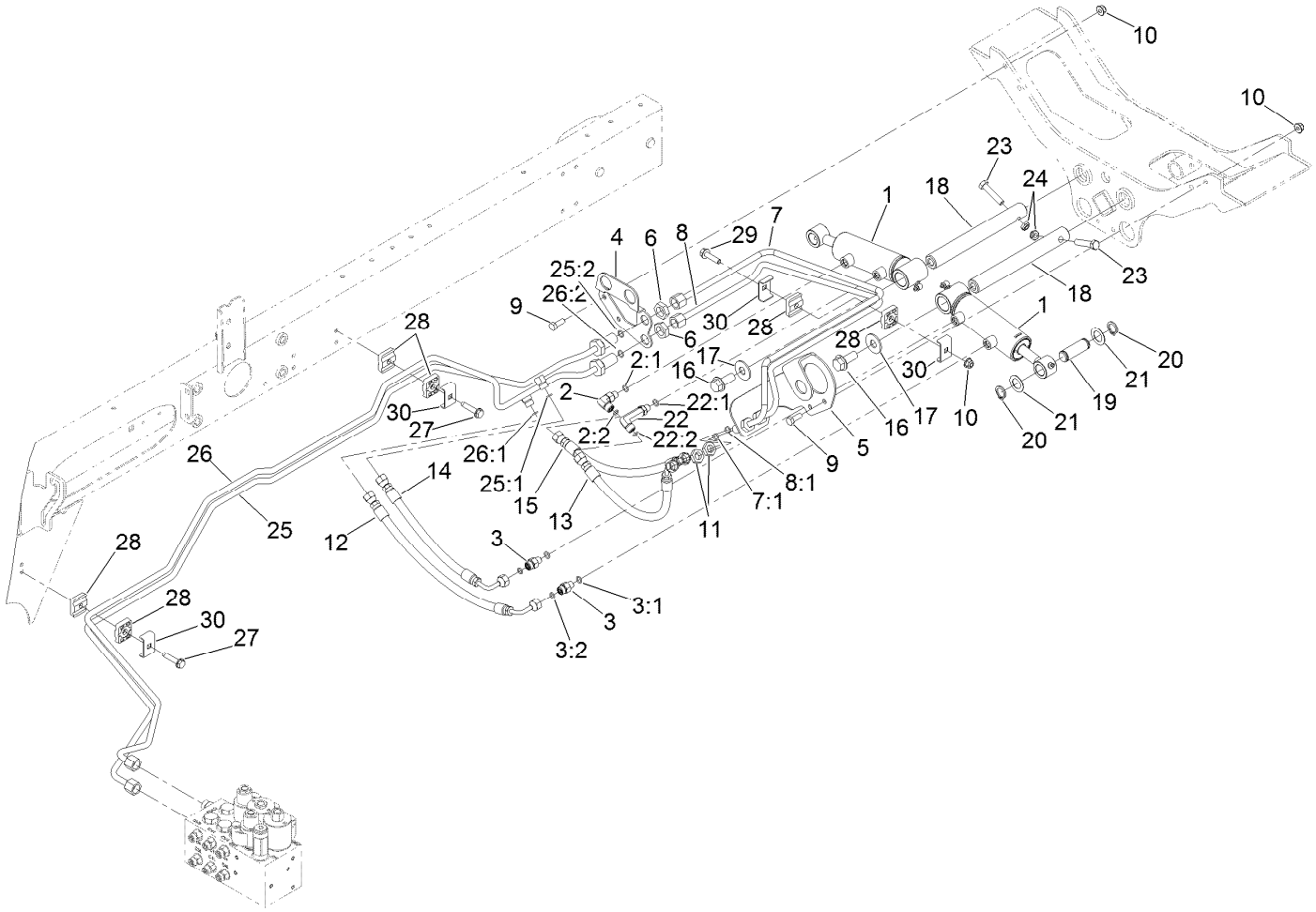


# Rear Lift Hydraulic Assembly

| Ref. | Part Number | Qty. | Description |
|---|---|---|---|
| 1 | 138-6999 | 2 | HYD Cylinder ASM |
| 2 | 340-132 | 1 | Fitting-Elbow, 90 DEG |
| 2:1 | 237-78 | 1 | O-Ring |
| 2:2 | 237-21 | 1 | O-Ring |
| 3 | 340-92 | 2 | Fitting-Straight |
| 3:1 | 237-78 | 1 | O-Ring |
| 3:2 | 237-21 | 1 | O-Ring |
| 4 | 120-3782-0P | 1 | Brkt-Bulhead, RH |
| 5 | 110-0917-0P | 1 | Bracket-Bulkhead, LH |
| 6 | 340-70 | 2 | Nut-Lock |
| 7 | 133-2987 | 1 | Tube-ASM |
| 7:1 | 237-21 | 1 | O-Ring |
| 8 | 133-2986 | 1 | Tube-ASM |
| 8:1 | 237-21 | 1 | O-Ring |
| 9 | 322-4 | 4 | Screw-HH |
| 10 | 104-8300 | 5 | Nut-HF, NI |
| 11 | 340-78 | 2 | Nut-Lock |
| 12 | 110-0930 | 1 | Hose-HYD |
| 13 | 110-8966 | 1 | Hose-HYD |
| 14 | 110-0929 | 1 | Hose-HYD |
| 15 | 110-0931 | 1 | Hose-HYD |

| Ref. | Part Number | Qty. | Description |
|---|---|---|---|
| 16 | 3234-38 | 2 | Screw-HHF |
| 17 | 3256-6 | 2 | Washer-Flat |
| 18 | 117-0148 | 2 | Pin-Cylinder |
| 19 | 104-0046 | 2 | Pin-Slide, Cylinder |
| 20 | 32120-93 | 4 | Ring-Retaining |
| 21 | 3-6498 | 4 | Washer-Thrust |
| 22 | 100-7695 | 1 | Fitting-Elbow 90 |
| 22:1 | 237-78 | 1 | O-Ring |
| 22:2 | 237-21 | 1 | O-Ring |
| 23 | 323-9 | 2 | Screw-HH |
| 24 | 3296-59 | 2 | Nut-Lock, NI |
| 25 | 120-3766 | 1 | HYD Tube ASM |
| 25:1 | 237-21 | 1 | O-Ring |
| 25:2 | 237-22 | 1 | O-Ring |
| 26 | 120-3771 | 1 | HYD Tube ASM |
| 26:1 | 237-21 | 1 | O-Ring |
| 26:2 | 237-22 | 1 | O-Ring |
| 27 | 32144-57 | 2 | Screw |
| 28 | 56-7973 | 6 | Clamp-Tube |
| 29 | 3230-5 | 1 | Bolt-CARR |
| 30 | 119-1418 | 4 | Plate-Clamp, Short |

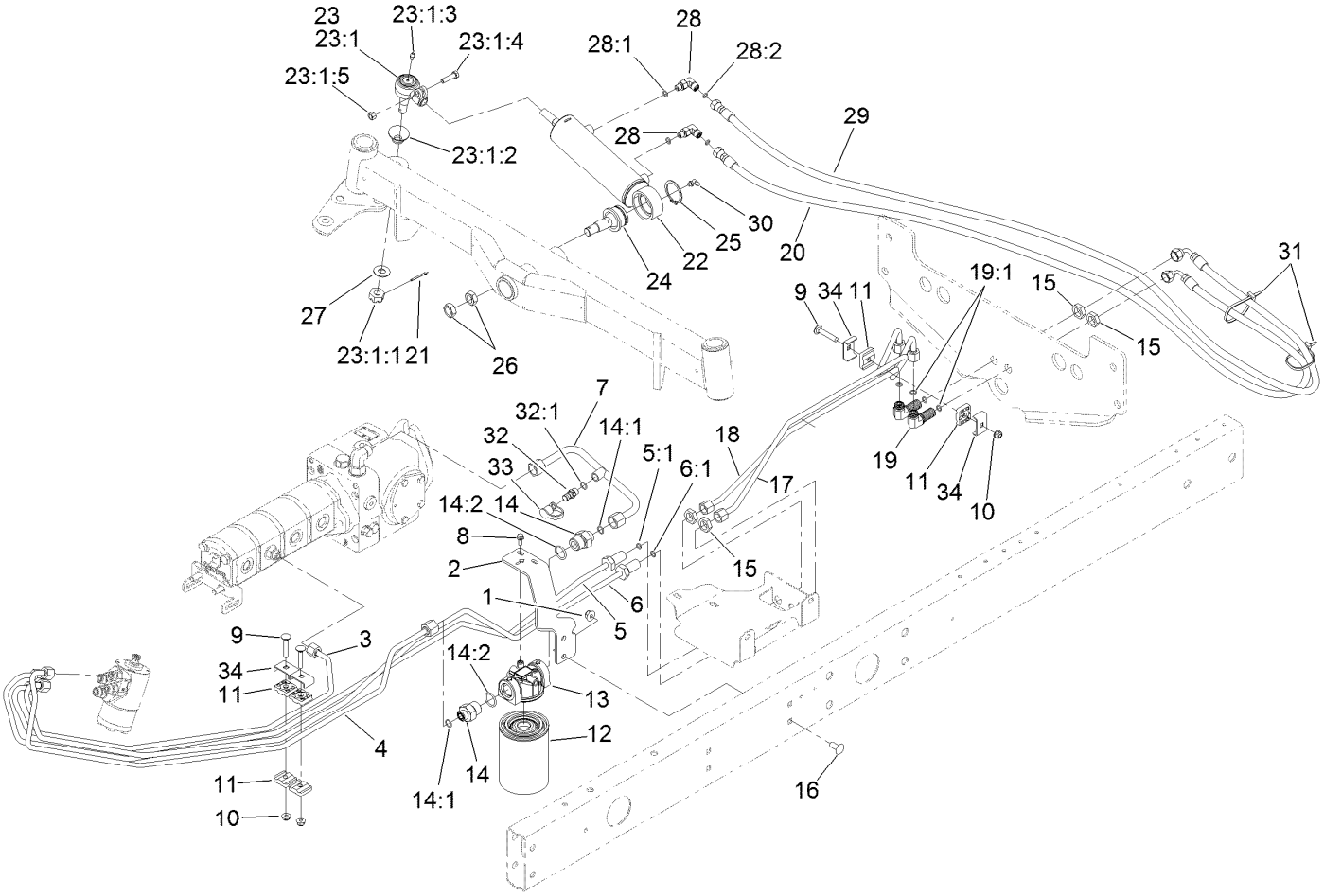


# Steering Hydraulic Assembly

| Ref. | Part Number | Qty. | Description |
|---|---|---|---|
| 1 | 104-8301 | 2 | Nut-HF, NI |
| 2 | 110-0906-0P | 1 | Support - Filter, Oil |
| 3 | 108-1710 | 1 | Tube ASM |
| 4 | 108-1711 | 1 | Tube-HYD |
| 5 | 108-1712 | 1 | Tube ASM |
| 5:1 | 237-22 | 1 | O-Ring |
| 6 | 108-1713 | 1 | Tube ASM |
| 6:1 | 237-22 | 1 | O-Ring |
| 7 | 121-5601 | 1 | Tube-HYD |
| 8 | 3234-33 | 2 | Screw-HHF |
| 9 | 3230-5 | 3 | Bolt-CARR |
| 10 | 104-8300 | 3 | Nut-HF, NI |
| 11 | 56-7973 | 6 | Clamp-Tube |
| 12 | 86-3010 | 1 | Filter-Oil |
| 13 | 117-5820 | 1 | Head-Filter |
| 14 | 100-4240 | 2 | Fitting-STR |
| 14:1 | 237-30 | 1 | O-Ring |
| 14:2 | 237-81 | 1 | O-Ring |

| Ref. | Part Number | Qty. | Description |
|---|---|---|---|
| 15 | 340-70 | 4 | Nut-Lock |
| 16 | 3231-27 | 2 | Screw-CARR |
| 17 | 110-9019 | 1 | Tube-HYD |
| 18 | 110-9020 | 1 | Tube-HYD |
| 19 | 340-154 | 2 | Union-Bulkhead |
| 19:1 | 237-22 | 2 | O-Ring |
| 20 | 110-0928 | 1 | Hose-HYD |
| 21 | 3272-12 | 1 | Pin-Cotter |
| 22 | 110-9035 | 1 | HYD Cylinder ASM |
| 23 | 106-6895-03 | 1 | Ball Joint ASM |
| 23:1 | | 1 | Joint-Ball ● |
| 23:1:1 | 32136-13 | 1 | Nut-SHH |
| 23:1:2 | 106-6896 | 1 | Seal |
| 23:1:3 | 302-5 | 1 | Fitting-Grease |
| 23:1:4 | 3210-7 | 1 | Screw-HH |
| 23:1:5 | 32152-5 | 1 | Nut-Hex |
| 24 | 106-6774 | 1 | Joint-Ball |
| 25 | 32151-104 | 1 | Ring-Retaining, External |

● Not serviced separately

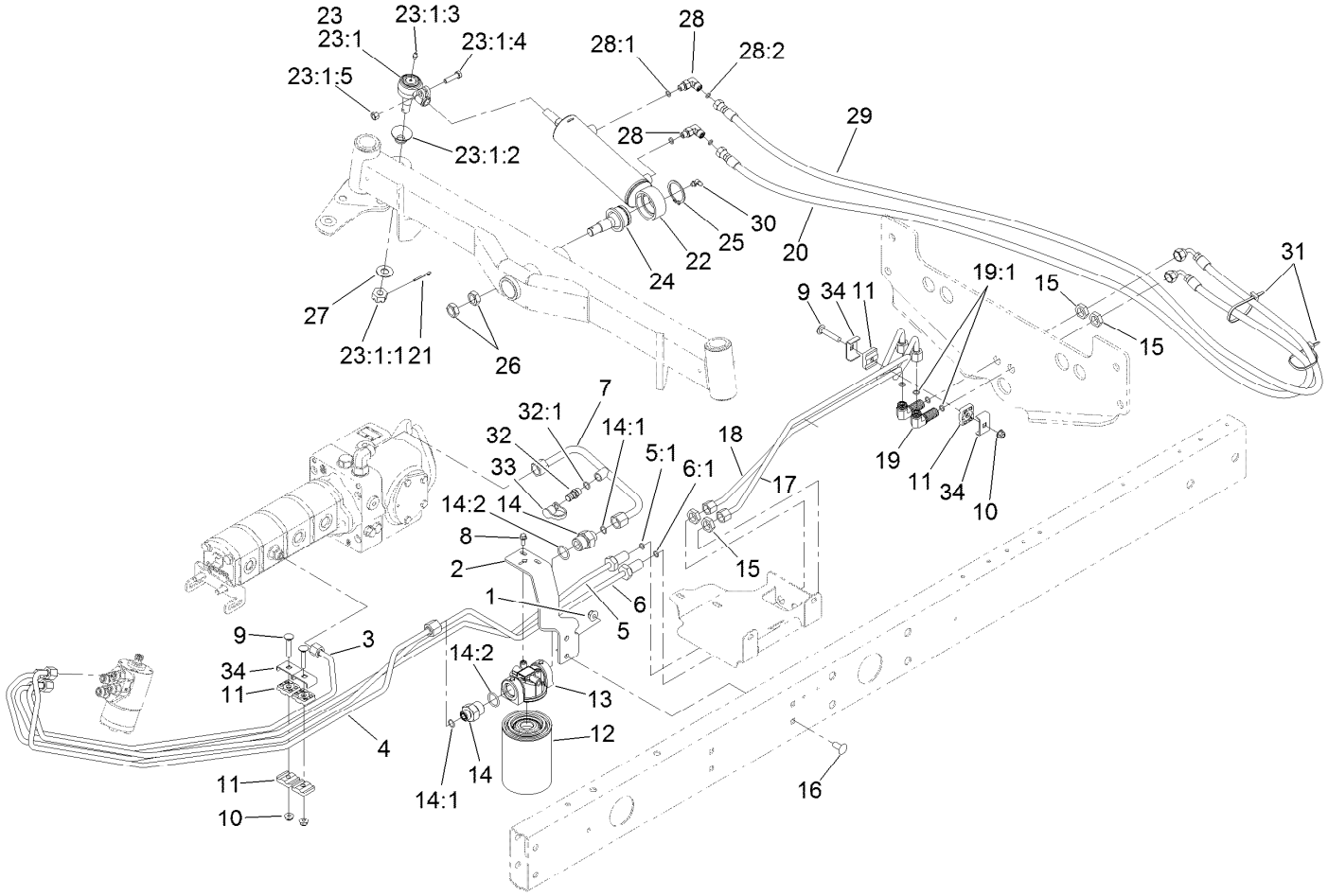


# Steering Hydraulic Assembly (continued)

| Ref. | Part Number | Qty. | Description |
|---|---|---|---|
| 26 | 3220-6 | 2 | Nut-Jam |
| 27 | 69-8980 | 1 | Washer |
| 28 | 340-132 | 2 | Fitting-Elbow, 90 DEG |
| 28:1 | 237-78 | 1 | O-Ring |
| 28:2 | 237-21 | 1 | O-Ring |
| 29 | 110-0973 | 1 | Hose-HYD |
| 30 | 302-40 | 1 | Fitting-Grease, 90 DEG |
| 31 | 3290-378 | 2 | Tie-Cable |
| 32 | 59-7410 | 1 | Fitting-Diagnostic |
| 32:1 | 237-42 | 1 | O-Ring |
| 33 | 354-79 | 1 | Cap-Dust |
| 34 | 119-1418 | 4 | Plate-Clamp, Short |

● Not serviced separately

# Hydraulic Cylinder Assembly No. 110-9035

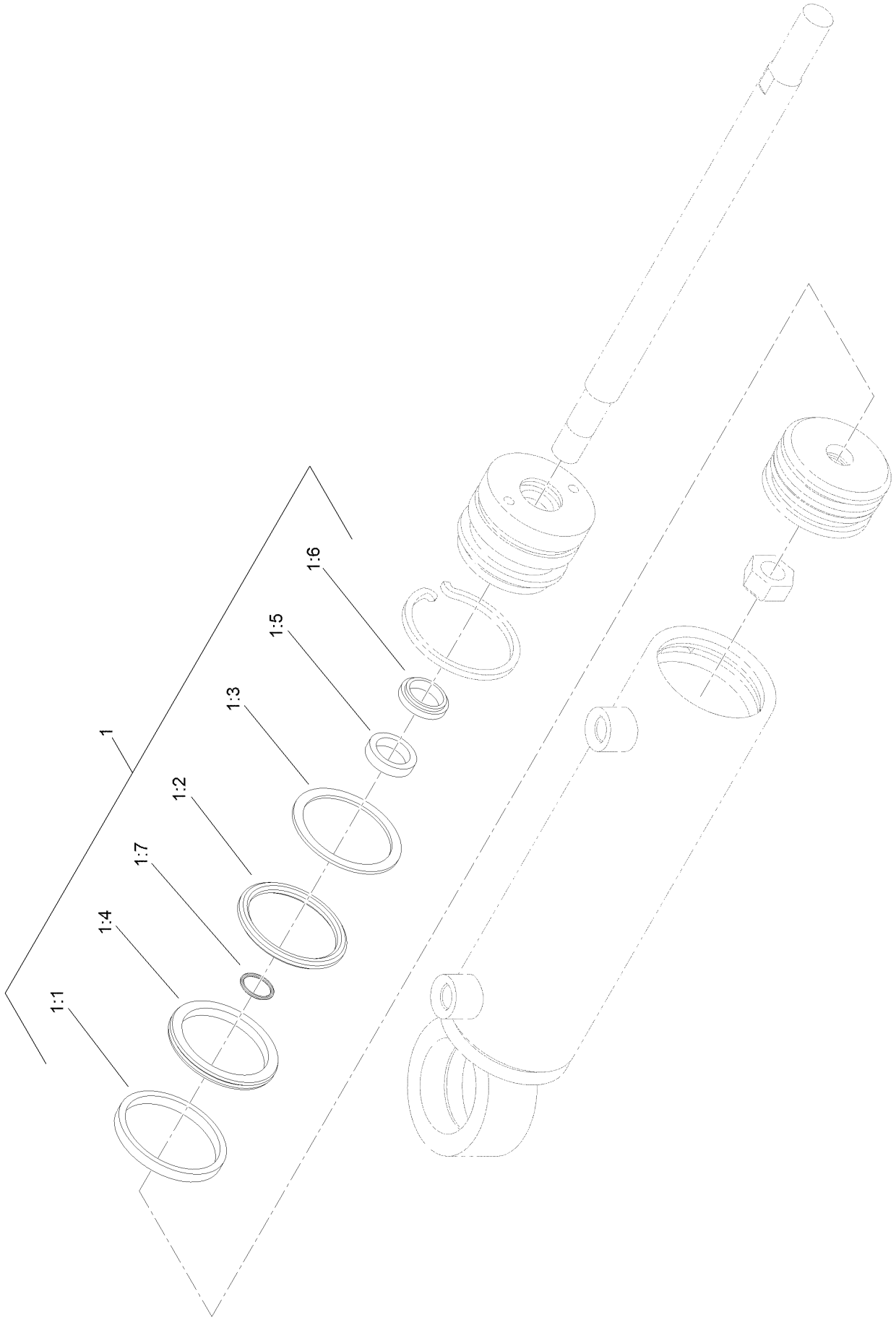

# Hydraulic Cylinder Assembly No. 110-9035 (continued)

| Ref. | Part Number | Qty. | Description |
|---|---|---|---|
| 1 | 114-8875 | 1 | Seal Kit |
| 1:1 | | 1 | O-Ring ● |
| 1:2 | | 1 | Backup ● |
| 1:3 | | 1 | Bp Seal ● |
| 1:4 | | 1 | Wear Ring ● |
| 1:5 | | 1 | Bt Seal ● |
| 1:6 | | 1 | Dust Seal ● |
| 1:7 | | 1 | O-Ring ● |

● Not serviced separately

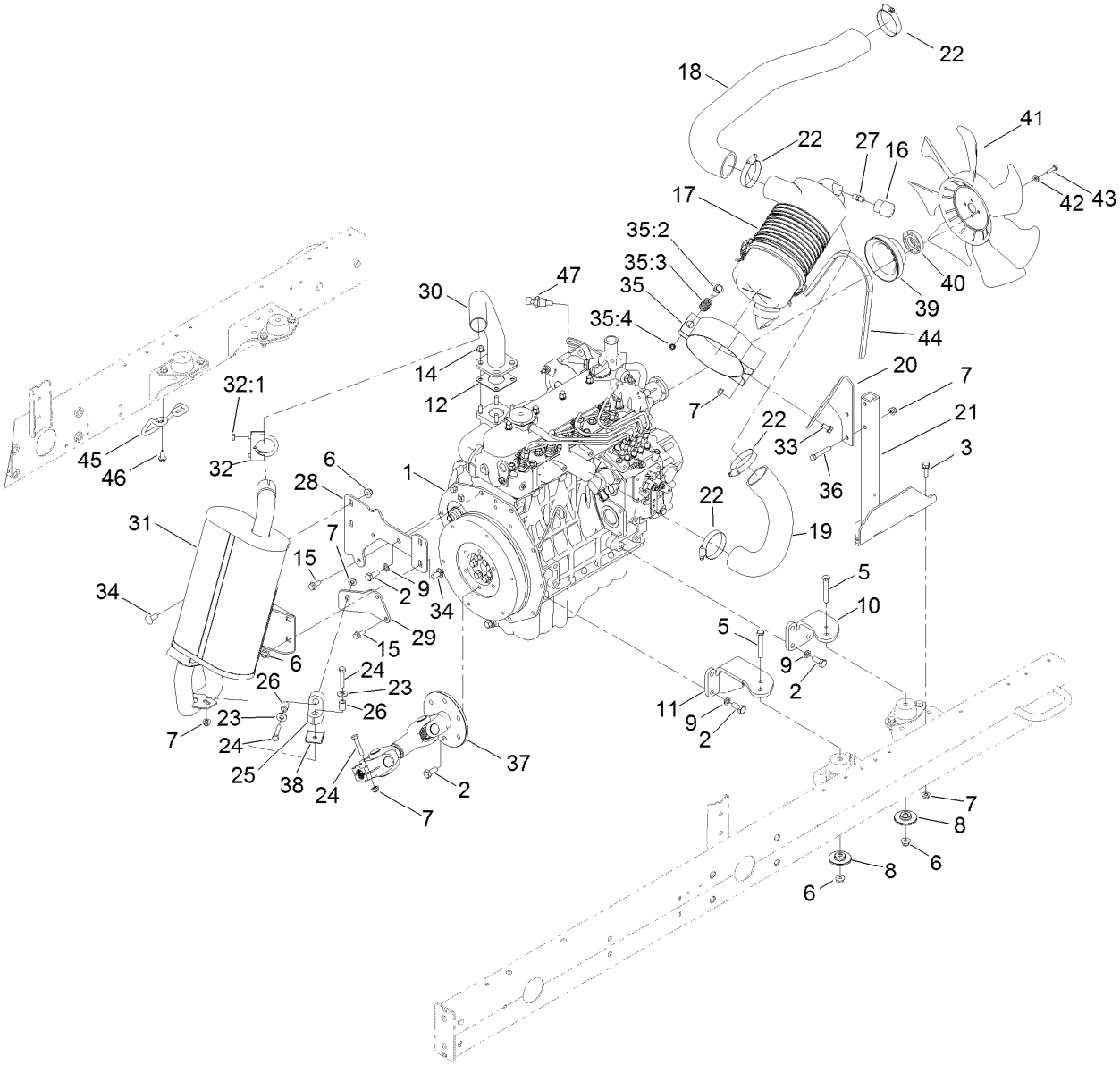


# Engine, Muffler and Air Cleaner Assembly

| Ref. | Part Number | Qty. | Description |
|---|---|---|---|
| 1 | 132-5206 | 1 | Engine-Kubota, V1505 |
| 2 | 43-0090 | 19 | Screw-HH |
| 3 | 3234-29 | 3 | Screw-HHF |
| 5 | 323-14 | 4 | Screw-HH |
| 6 | 104-8301 | 8 | Nut-HF, NI |
| 7 | 104-8300 | 11 | Nut-HF, NI |
| 8 | 138-6462 | 4 | Support-Isolator |
| 9 | 48-9590 | 13 | Washer-Lock |
| 10 | 115-8066-0P | 2 | Mount-Engine |
| 11 | 120-3812-0P | 2 | Mount ASM [primed] |
| 12 | 99-8343 | 1 | Gasket-Muffler |
| 14 | 104-2612 | 4 | Nut-HF |
| 15 | 33104-020 | 4 | Screw-HHF |
| 16 | 93-9164 | 1 | Indicator-Mini |
| 17 | 106-5277 | 1 | Air Cleaner ASM |
| 18 | 117-5162 | 1 | Hose-Formed |
| 19 | 117-5164 | 1 | Hose-Formed |
| 20 | 127-2695-0P | 1 | Bracket-Air Cleaner |
| 21 | 121-5610-0P | 1 | Stand W.A. Air Cleaner (Welded) |
| 22 | 2412-130 | 4 | Clamp-Hose |

| Ref. | Part Number | Qty. | Description |
|---|---|---|---|
| 23 | 3256-3 | 2 | Washer-Flat |
| 24 | 322-9 | 4 | Screw-HH |
| 25 | 95-5622 | 1 | Hanger-Rubber |
| 26 | 93-5023 | 2 | Spacer |
| 27 | 94-1416 | 1 | Adapter-Indicator |
| 28 | 108-1785-0P | 1 | Bracket -Support, Muffler |
| 29 | 110-8974-0P | 1 | Bracket-Tail Pipe |
| 30 | 108-1782 | 1 | Header |
| 31 | 114-8897 | 1 | Muffler |
| 32 | 2112-9 | 1 | Clamp |
| 32:1 | 32128-20 | 2 | Nut-HF |
| 33 | 3234-14 | 2 | Screw-HHF |
| 34 | 3231-27 | 4 | Screw-CARR |
| 35 | 100-4825 | 1 | Band-Mounting, Air Cleaner |
| 35:2 | 94-3653 | 1 | Bolt |
| 35:3 | 94-3654 | 1 | Spring |
| 35:4 | 48-9510 | 1 | Nut |
| 36 | 322-10 | 2 | Screw-HH |
| 37 | 108-1641 | 1 | Driveshaft ASM |
| 38 | 110-8976 | 1 | Plate-Support, Isolator |
| 39 | 110-0972 | 1 | Pulley |

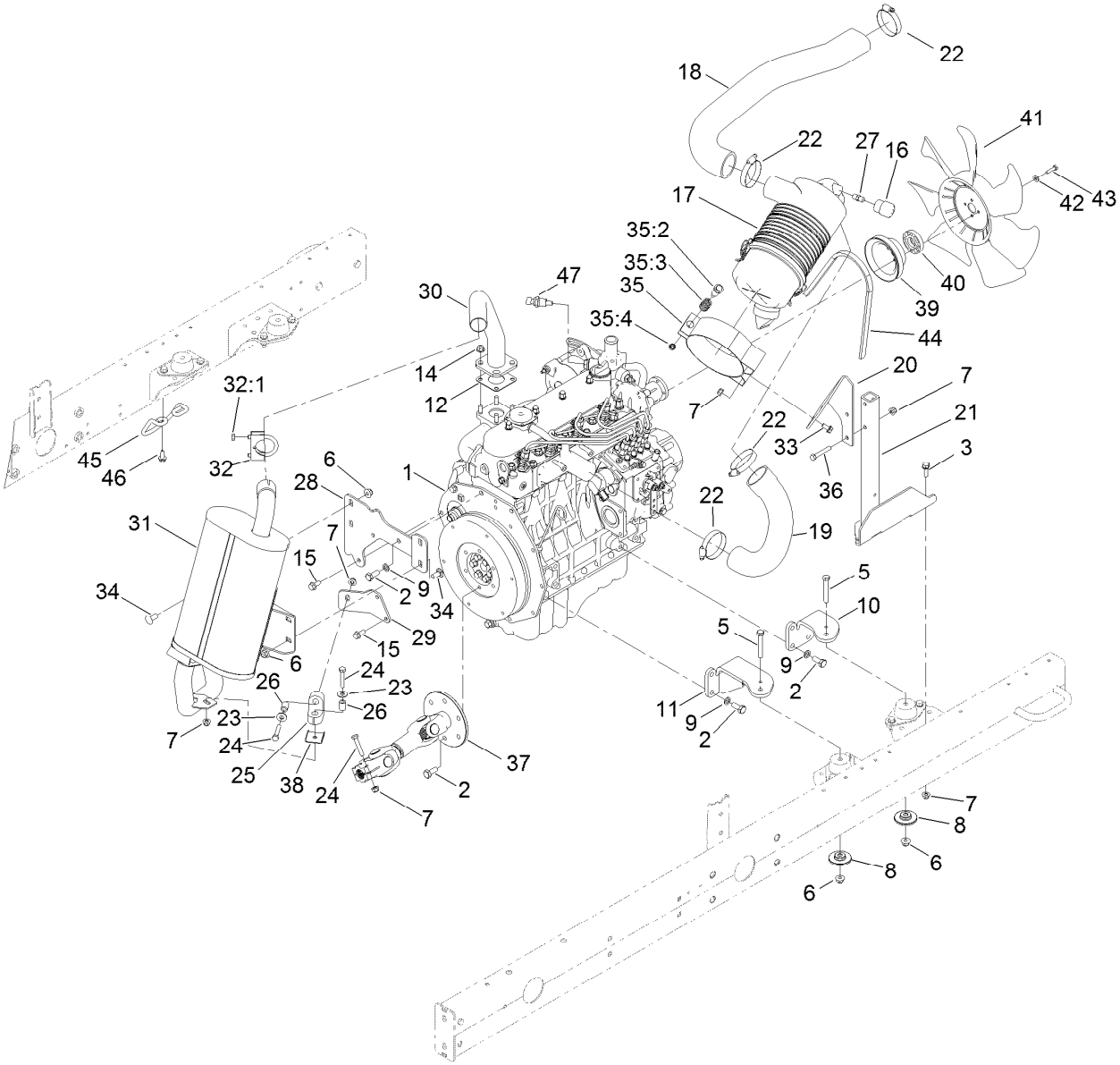


# Engine, Muffler and Air Cleaner Assembly (continued)

| Ref. | Part Number | Qty. | Description |
|---|---|---|---|
| 40 | 104-4247 | 1 | Spacer-Fan |
| 41 | 110-0966 | 1 | Fan-Cooling |
| 42 | 3256-22 | 4 | Washer-Flat |
| 43 | 33113-025 | 4 | Screw-HH |

| Ref. | Part Number | Qty. | Description |
|---|---|---|---|
| 44 | 98-9676 | 1 | V-Belt |
| 45 | 127-2612 | 1 | Guard-Pipe, Tail |
| 46 | 32104-32 | 2 | Screw-HWH |
| 47 | 119-4478 | 1 | Sender-Temperature |

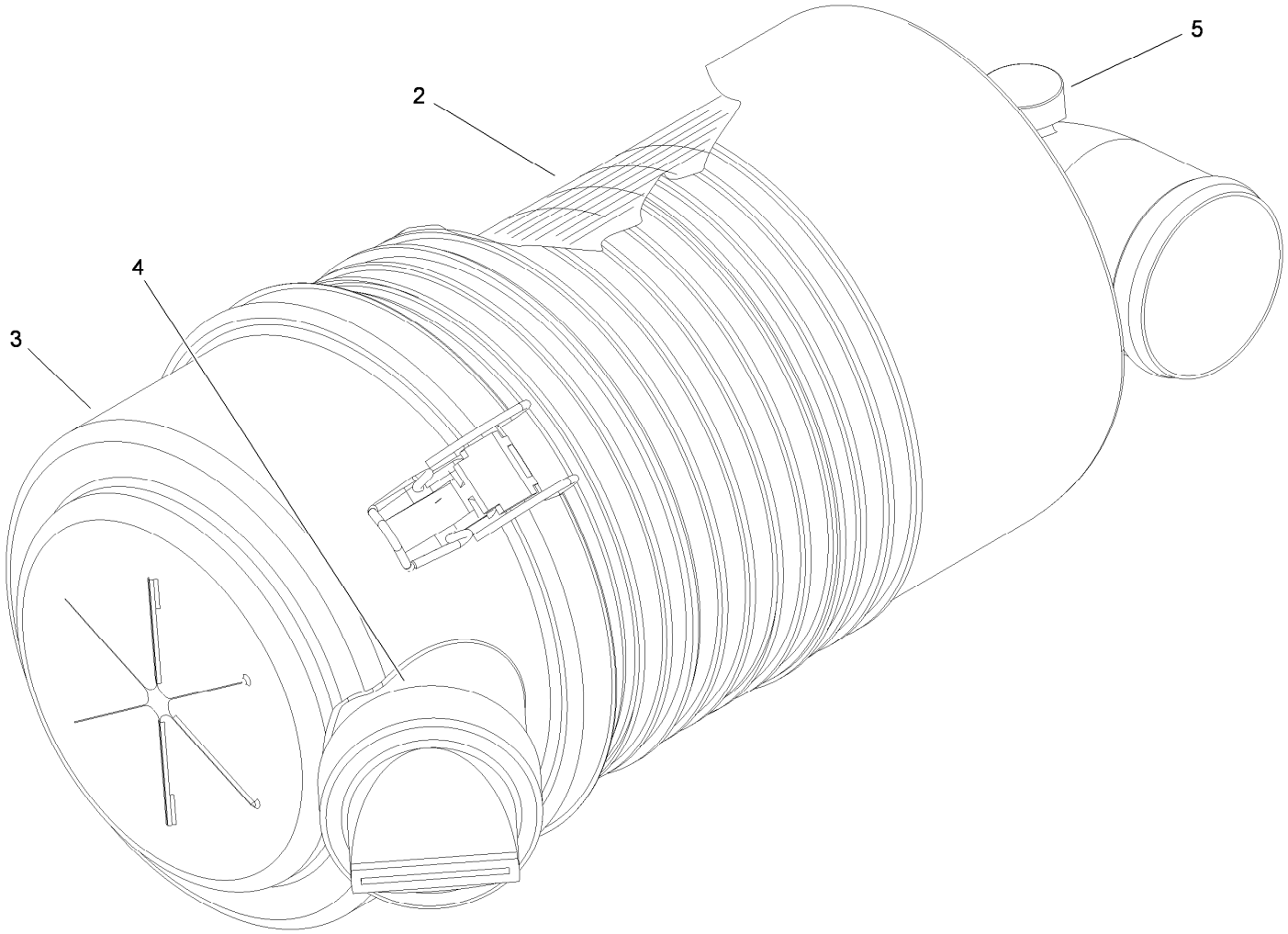


# Air Cleaner Assembly No. 106-5277

| *Ref.* | *Part Number* | *Qty.* | *Description* |
|---|---|---|---|
| 2 | 108-3810 | 1 | Filter-Air |
| 3 | 98-9771 | 1 | Cover ASM |
| 4 | 87-9400 | 1 | Valve-Vacuator |
| 5 | 285-17 | 1 | Plug-Pipe |

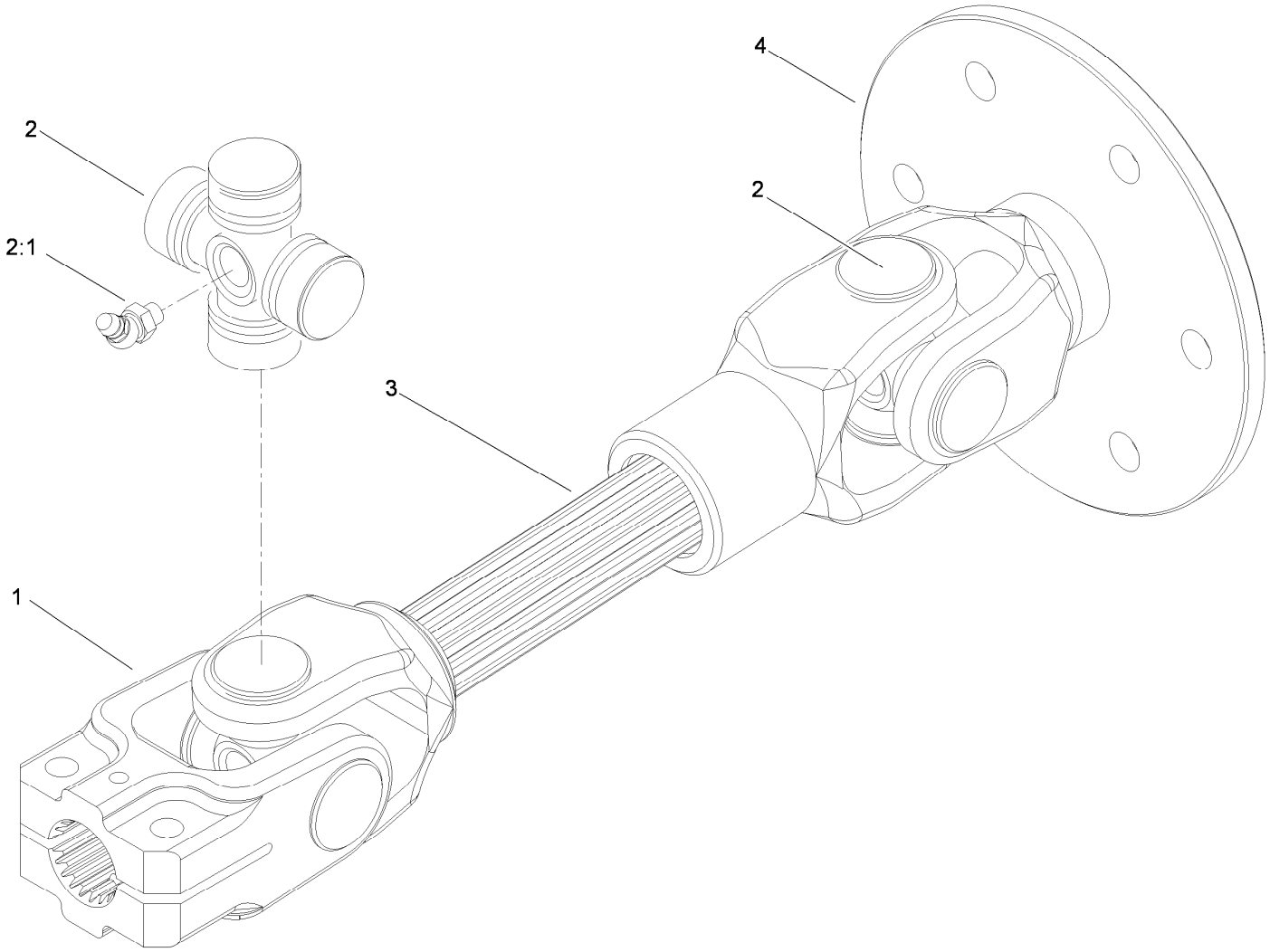


# Driveshaft Assembly No. 108-1641

| *Ref.* | *Part Number* | *Qty.* | *Description* |
|---|---|---|---|
| 1 | 54-9040 | 1 | Yoke-End |
| 2 | 54-9180 | 2 | U-Joint Kit |
| 2:1 | 62-3820 | 1 | Fitting-Grease |
| 3 | 108-4574 | 1 | Joint And Shaft ASM |
| 4 | 108-4575 | 1 | Joint And Yoke ASM |

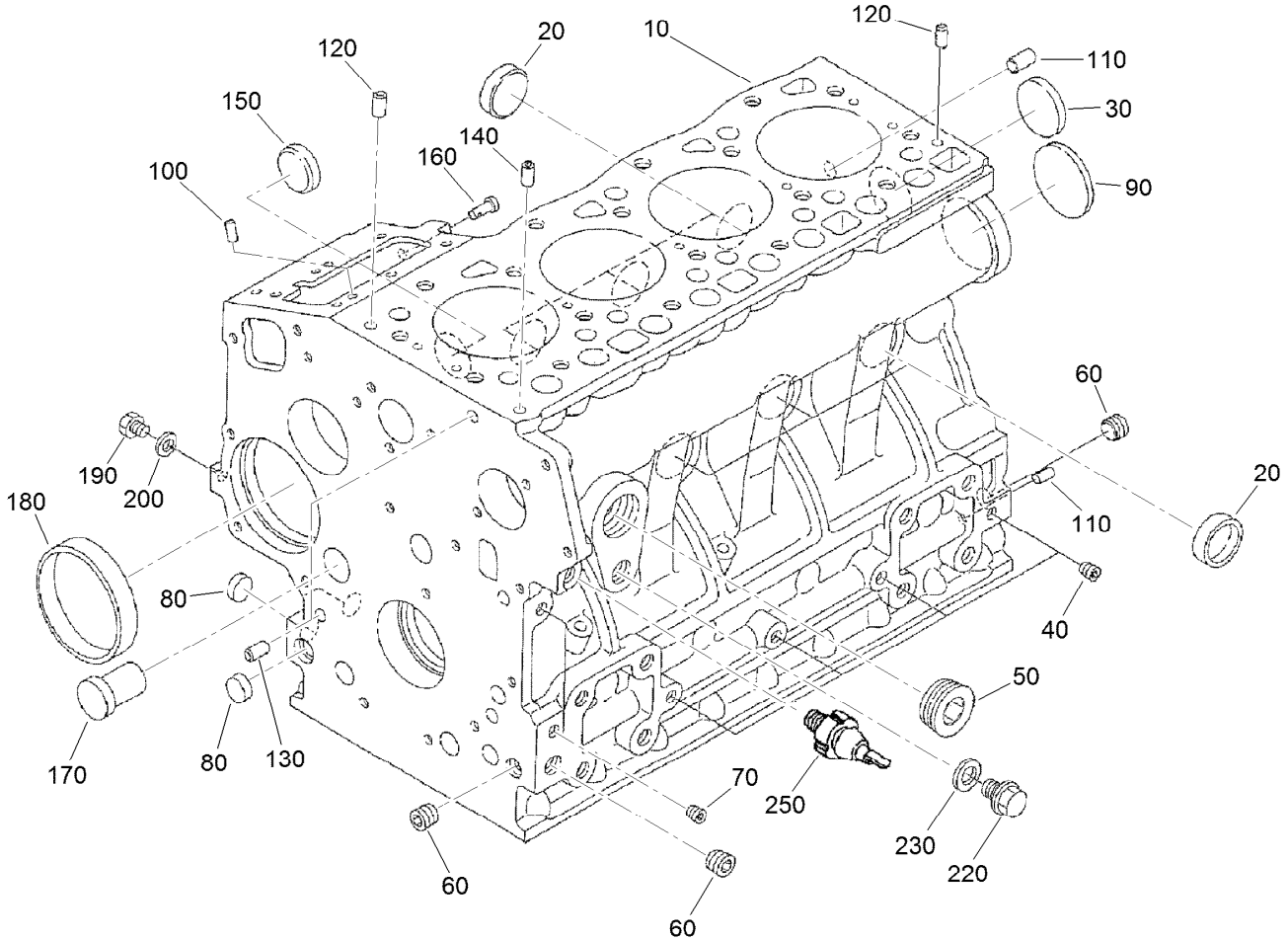


# Crankcase Assembly

| Ref. | Part Number | Qty. | Description |
|---|---|---|---|
| 10 | 120-2558 | 1 | Crankcase ASM |
| 20 | 98-9398 | 6 | Cap-Sealing |
| 30 | 98-7539 | 1 | Cap-Sealing |
| 40 | 98-9687 | 4 | Plug |
| 50 | 105-3779 | 1 | Plug |
| 60 | 98-9597 | 3 | Plug |
| 70 | 98-7487 | 2 | Plug |
| 80 | 98-9379 | 3 | Plug-Expansion |
| 90 | 98-9668 | 1 | Plug-Expansion |
| 100 | 98-9375 | 2 | Pin-Straight |
| 110 | 98-9377 | 2 | Pin-Straight |
| 120 | 98-9376 | 2 | Pin-Straight |

| Ref. | Part Number | Qty. | Description |
|---|---|---|---|
| 130 | 98-9387 | 2 | Pin-Pipe |
| 140 | 98-9539 | 1 | Pin-Pipe |
| 150 | 98-9599 | 1 | Plug |
| 160 | 105-3796 | 1 | Pin-Spring, Start |
| 170 | 98-9675 | 1 | Plug |
| 180 | 98-9656 | 1 | Bushing-Governor, Gear |
| 190 | 98-7507 | 1 | Plug |
| 200 | 98-7428 | 1 | Gasket |
| 220 | 99-3447 | 1 | Plug |
| 230 | 106-7056 | 1 | Gasket |
| 250 | 98-9416 | 1 | Switch-Oil |

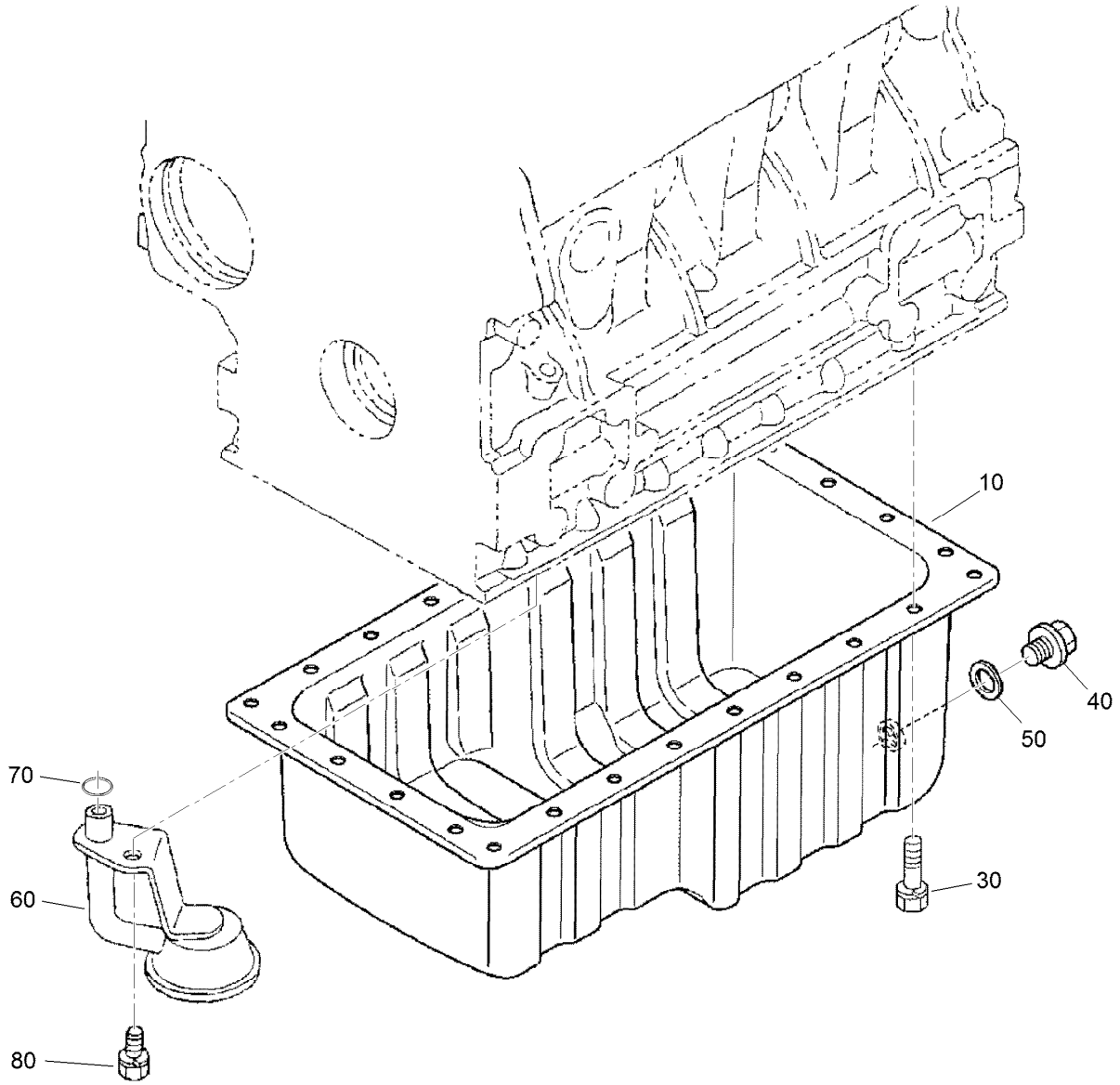


# Oil Pan Assembly

| Ref. | Part Number | Qty. | Description |
|---|---|---|---|
| 10 | 112-0186 | 1 | Oil Pan ASM |
| 30 | 98-9351 | 26 | Bolt |
| 40 | 114-8151 | 1 | Plug-Drain |
| 50 | 98-7524 | 1 | Gasket |
| 60 | 112-7003 | 1 | Head-Filter, Oil |
| 70 | 105-3776 | 1 | O-Ring |
| 80 | 98-7526 | 1 | Bolt |

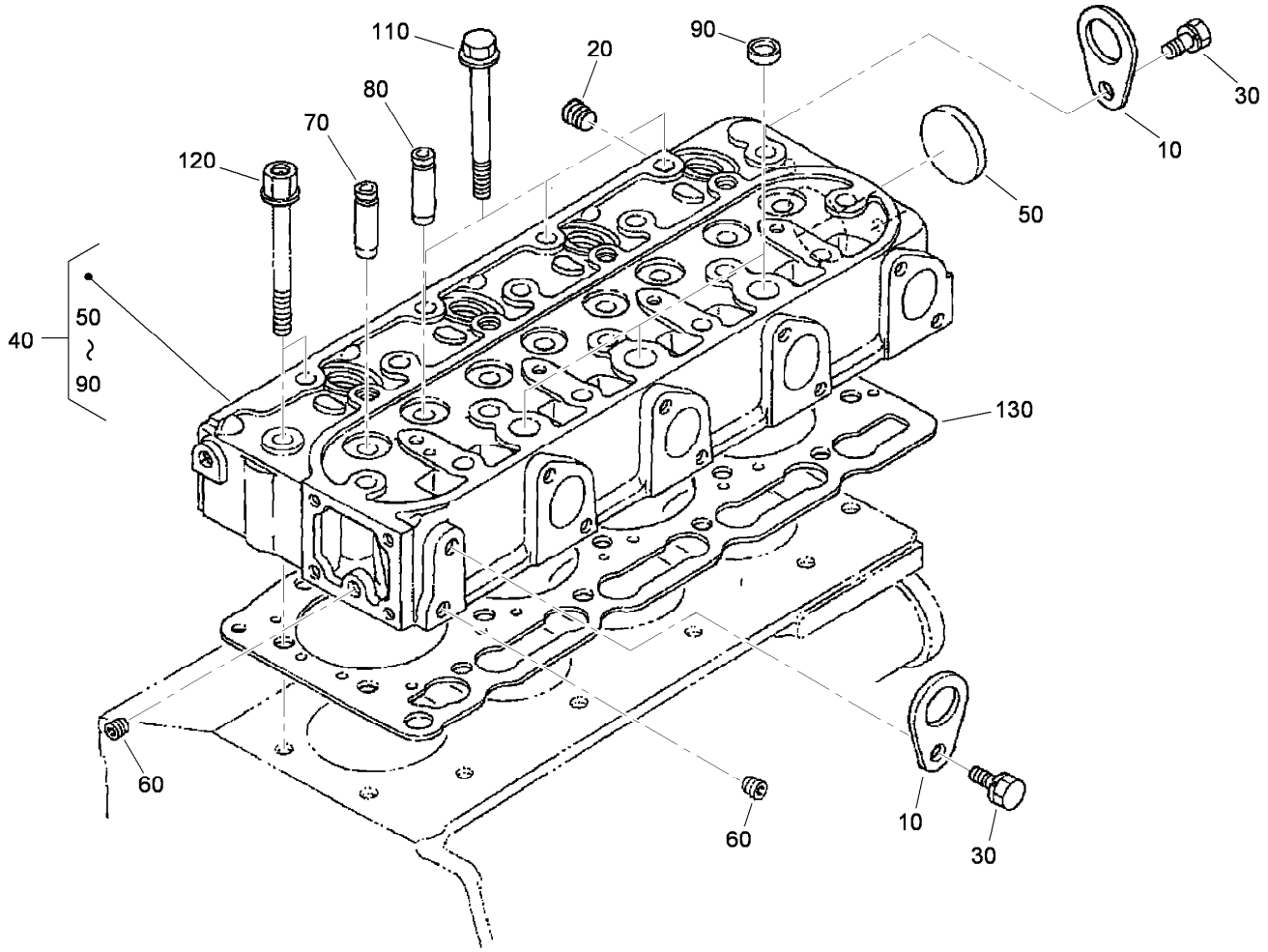


# Cylinder Head Assembly

| *Ref.* | *Part Number* | *Qty.* | *Description* |
|---|---|---|---|
| 10 | 98-7531 | 2 | Hook-Engine |
| 20 | 98-9444 | 1 | Plug |
| 30 | 100-9195 | 2 | Bolt |
| 40 | 115-3012 | 1 | Cylinder Head ASM |
| 50 | 105-3705 | 1 | Cap-Sealing |
| 60 | 98-9687 | 2 | Plug |
| 70 | 107-9066 | 4 | Guide-Valve, Inlet |
| 80 | 107-9067 | 4 | Guide-Valve, Exhaust |
| 90 | 98-9389 | 3 | Cap-Sealing |
| 110 | 98-9479 | 16 | Bolt-Head, Cylinder |
| 120 | 98-9647 | 2 | Bolt-Head, Cylinder |
| 130 | 108-2855 | 1 | Gasket-Head, Cylinder |

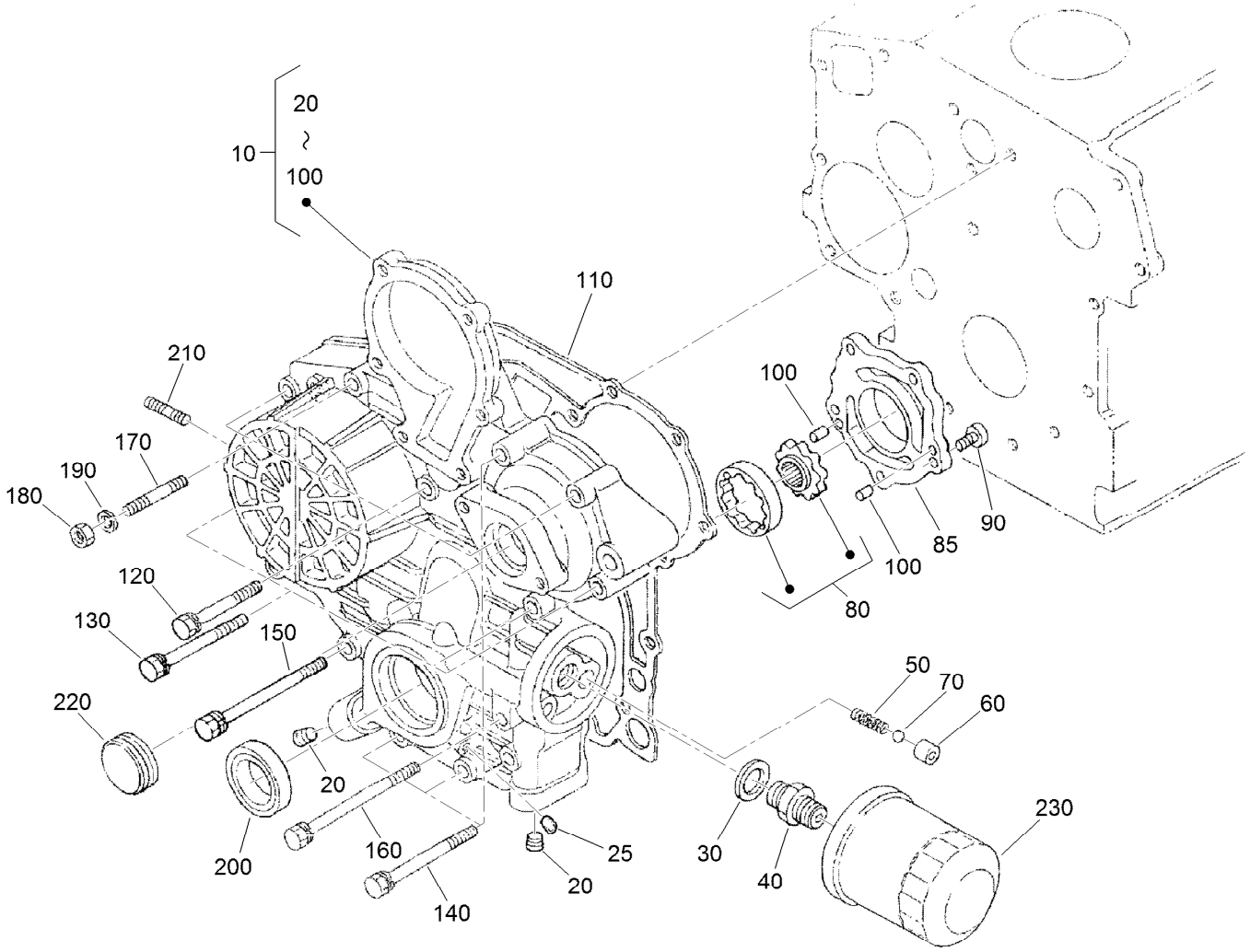


# Gear Case Assembly

| Ref. | Part Number | Qty. | Description |
|---|---|---|---|
| 10 | 115-4111 | 1 | Gear Case ASM |
| 20 | 127-0425 | 2 | Plug |
| 25 | 98-7487 | 1 | Plug |
| 30 | 98-7562 | 1 | Washer-Plain |
| 40 | 98-9388 | 1 | Joint-Pipe |
| 50 | 98-9544 | 1 | Spring |
| 60 | 98-9543 | 1 | Seat-Valve |
| 70 | 98-9380 | 1 | Ball |
| 80 | 98-9540 | 1 | Oil Pump Rotor ASM |
| 85 | 107-9069 | 1 | Cover-Pump, Oil |
| 90 | 107-9071 | 5 | Screw |
| 100 | 107-9072 | 2 | Pin-Straight |
| 110 | 98-9633 | 1 | Gasket-Case, Gear |

| Ref. | Part Number | Qty. | Description |
|---|---|---|---|
| 120 | 100-1765 | 3 | Bolt |
| 130 | 105-3797 | 4 | Bolt |
| 140 | 98-9356 | 4 | Bolt |
| 150 | 107-9074 | 1 | Bolt |
| 160 | 98-9586 | 1 | Bolt |
| 170 | 105-3709 | 1 | Stud |
| 180 | 98-7572 | 1 | Nut |
| 190 | 98-7699 | 1 | Washer-Spring |
| 200 | 98-9482 | 1 | Seal-Oil |
| 210 | 105-3710 | 2 | Stud |
| 220 | 99-3515 | 1 | Plug-Gearcase |
| 230 | 108-3841 | 1 | Filter-Oil |

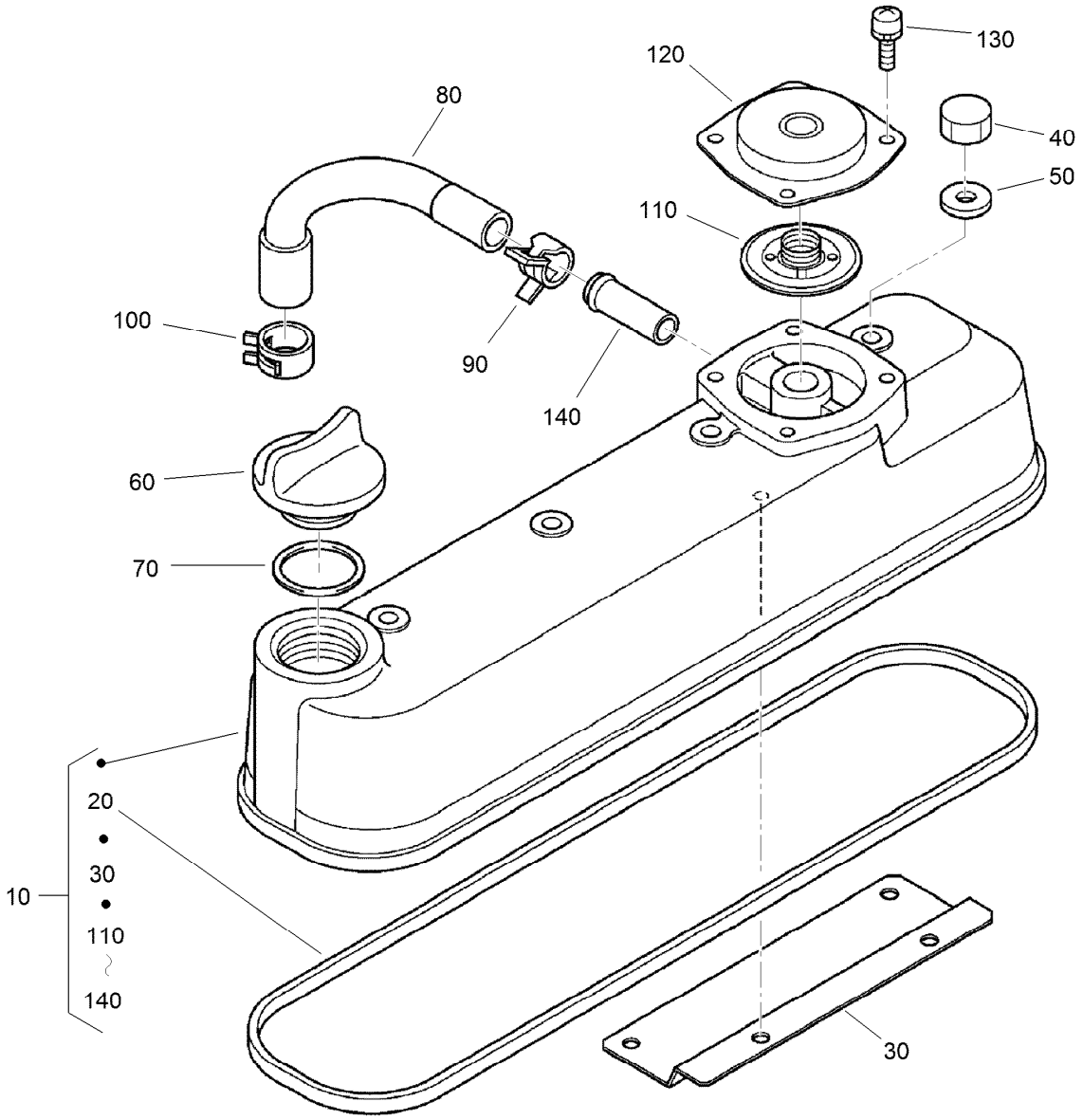


# Cylinder Head Cover Assembly

| Ref. | Part Number | Qty. | Description |
|---|---|---|---|
| 10 | 115-4130 | 1 | Cylinder Head Cover ASM |
| 20 | 105-3712 | 1 | Gasket-Cover, Head |
| 30 | 108-2857 | 1 | Shield-Breather |
| 40 | 98-9455 | 4 | Nut-Cap |
| 50 | 98-9454 | 4 | Gasket |
| 60 | 107-9075 | 1 | Plug-Filler, Oil |
| 70 | 99-3446 | 1 | O-Ring |
| 80 | 108-2858 | 1 | Tube-Breather |
| 90 | 108-2859 | 1 | Clamp-Hose |
| 100 | 108-2860 | 1 | Clamp-Hose |
| 110 | 110-3715 | 1 | Valve-Breather |
| 120 | 110-3714 | 1 | Cover-Breather |
| 130 | 98-9364 | 4 | Screw (With Washer) |
| 140 | 98-7766 | 1 | Pipe-Return, Water |

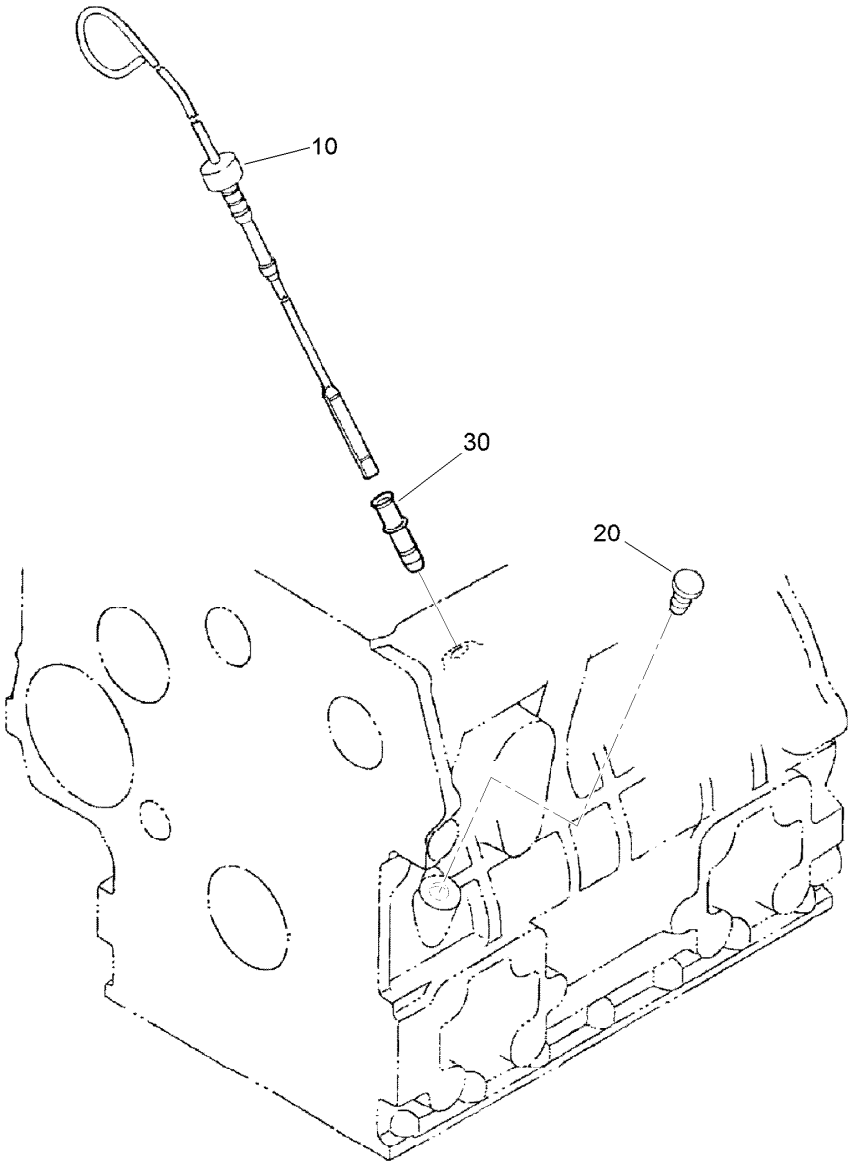


# Dipstick and Guide Assembly

| *Ref.* | *Part Number* | *Qty.* | *Description* |
|---|---|---|---|
| 10 | 105-3714 | 1 | Gauge-Oil |
| 20 | 105-4580 | 1 | Guide-Gauge, Oil |
| 30 | 110-3720 | 1 | Plug-Gauge, Oil |

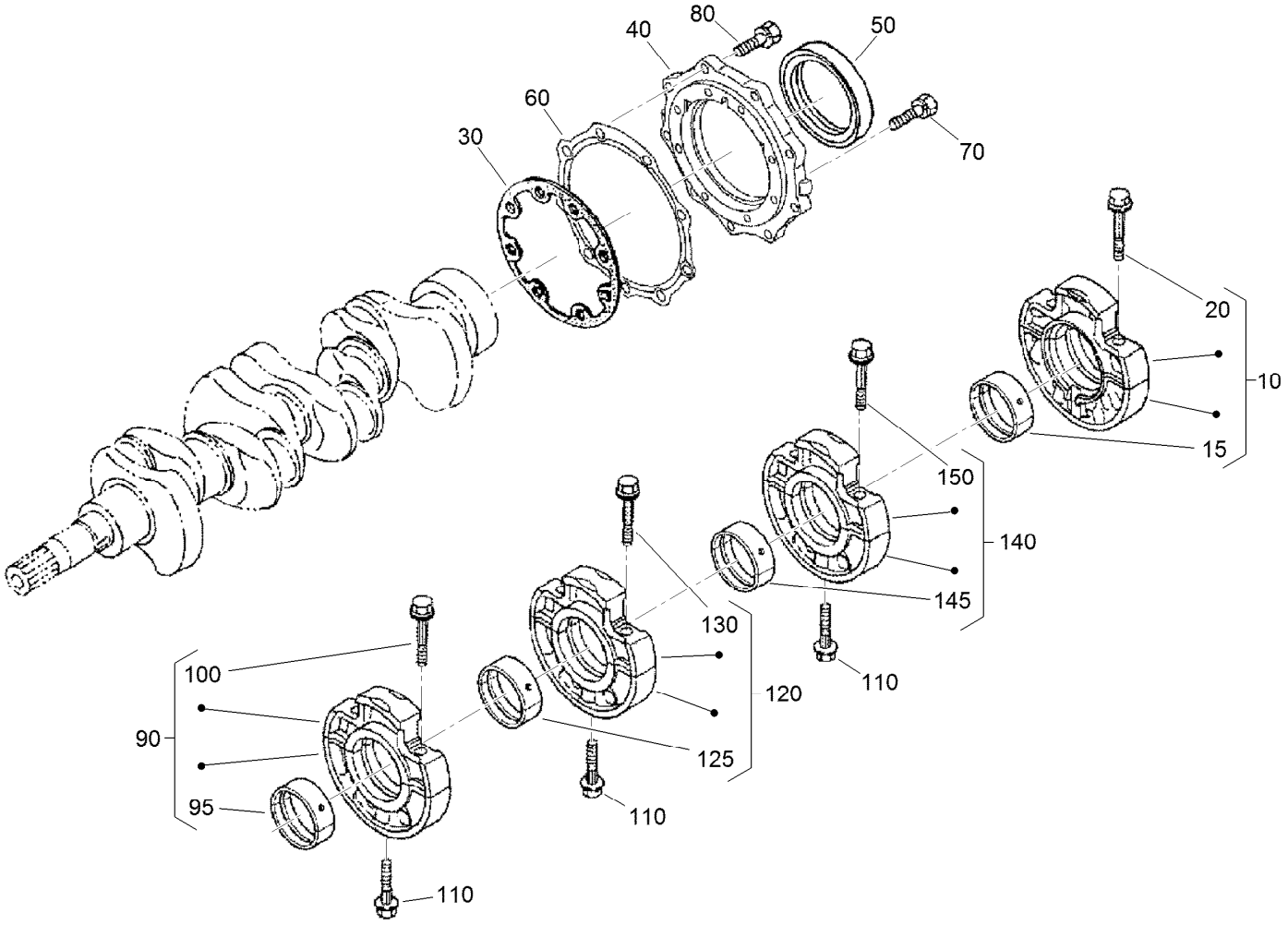


# Main Bearing Case Assembly

| Ref. | Part Number | Qty. | Description |
|---|---|---|---|
| 10 | 112-7026 | 1 | Wheel Bearing Case ASM |
| 15 | 112-7045 | 1 | Metal-Crankshaft |
| 20 | 98-9484 | 2 | Bolt-Case, Bearing |
| 30 | 98-9634 | 1 | Gasket-Case, Bearing |
| 40 | 112-7046 | 1 | Cover-Case, Bearing |
| 50 | 112-0180 | 1 | Seal-Oil |
| 60 | 112-7037 | 1 | Gasket-Cover, Case |
| 70 | 98-9352 | 8 | Bolt |
| 80 | 98-7568 | 9 | Bolt |
| 90 | 115-4106 | 1 | Main Bearing Case ASM |

| Ref. | Part Number | Qty. | Description |
|---|---|---|---|
| 95 | 98-9524 | 1 | Metal-Crankshaft (STD Set) |
| 100 | 98-9484 | 2 | Bolt-Case, Bearing |
| 110 | 98-9485 | 3 | Bolt-Case, Bearing |
| 120 | 115-4107 | 1 | Main Bearing Case ASM |
| 125 | 115-4106 | 1 | Main Bearing Case ASM |
| 130 | 98-9484 | 2 | Bolt-Case, Bearing |
| 140 | 130-1265 | 1 | Main Bearing Case ASM |
| 145 | 115-4106 | 1 | Main Bearing Case ASM |
| 150 | 98-9484 | 2 | Bolt-Case, Bearing |

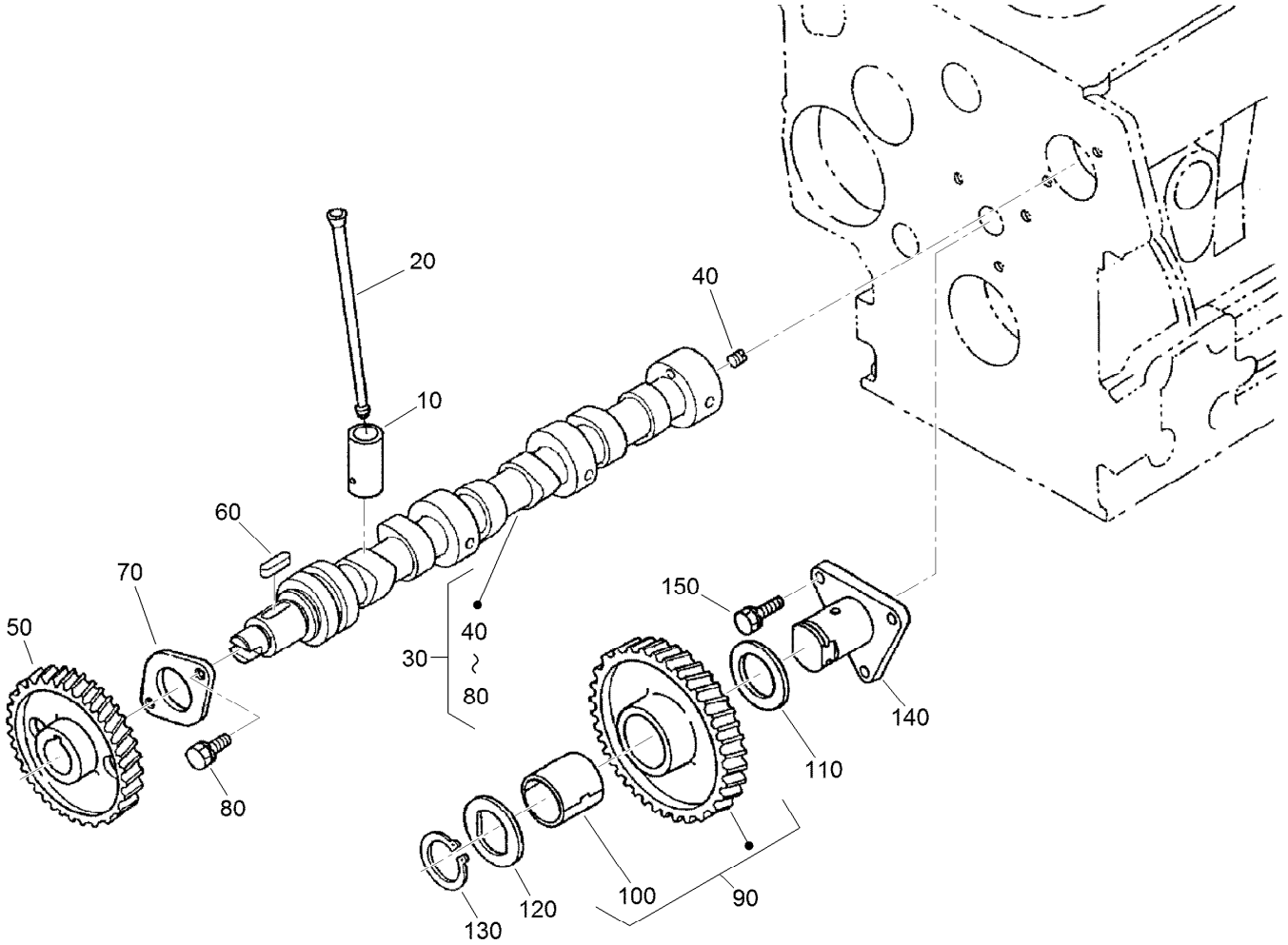


# Camshaft and Idle Gear Assembly

| Ref. | Part Number | Qty. | Description |
|---|---|---|---|
| 10 | 112-0185 | 8 | Tappet |
| 20 | 98-9509 | 8 | Rod-Push |
| 30 | 115-4128 | 1 | Camshaft ASM |
| 40 | 98-7449 | 1 | Screw-Set |
| 50 | 120-3116 | 1 | Camshaft ASM |
| 60 | 98-9378 | 1 | Key-Feather |
| 70 | 98-9510 | 1 | Stopper-Camshaft |
| 80 | 98-7692 | 2 | Bolt |
| 90 | 98-9649 | 1 | Idle Gear ASM |
| 100 | 98-9650 | 1 | Bushing-Gear, Idle |
| 110 | 98-9535 | 1 | Collar-Gear, Idle |
| 120 | 98-9536 | 1 | Collar-Gear, Idle |
| 130 | 98-9534 | 1 | Circlip-Gear, Idle |
| 140 | 98-9533 | 1 | Shaft-Gear, Idle |
| 150 | 98-7692 | 3 | Bolt |

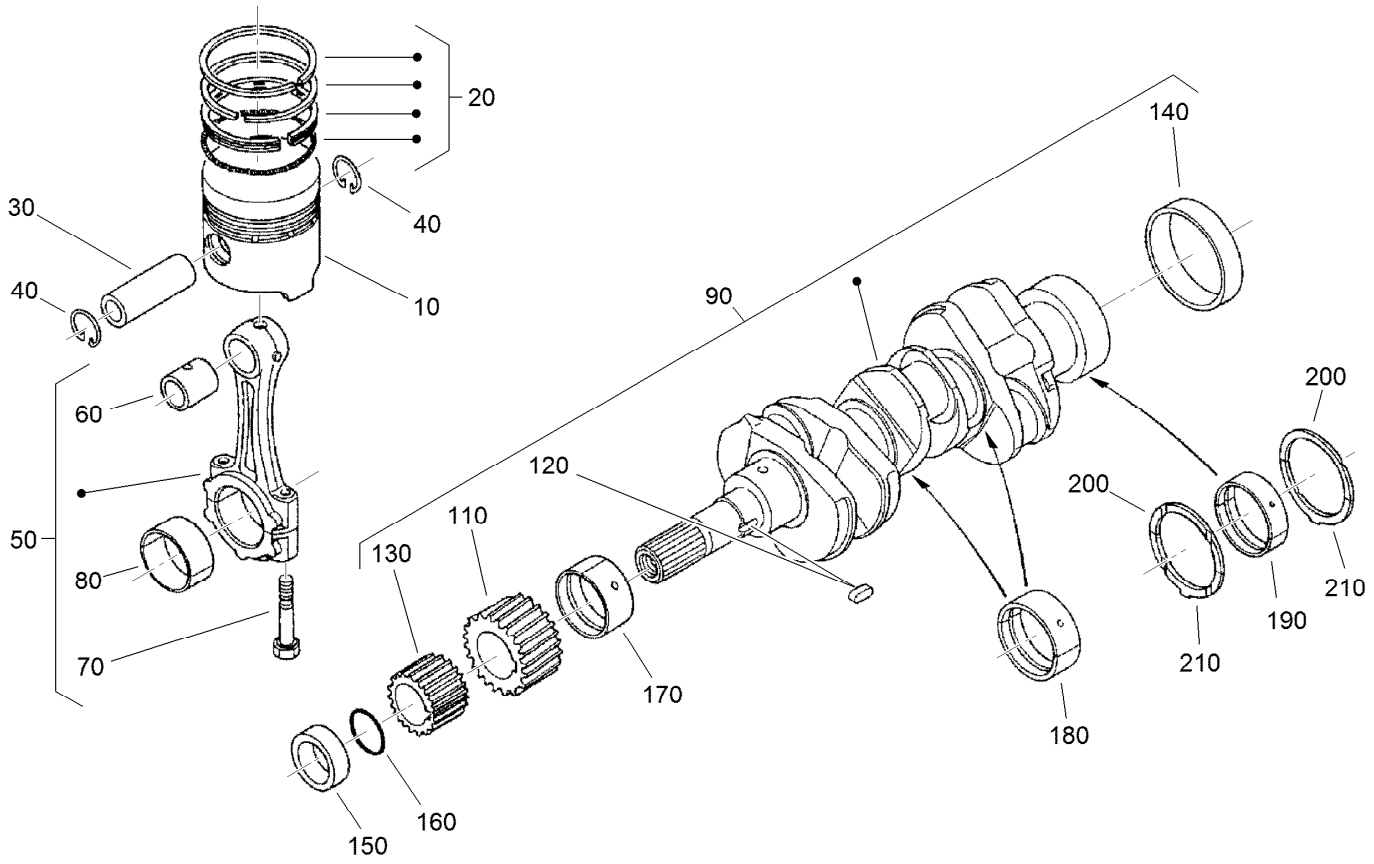


# Piston and Crankshaft Assembly

| Ref. | Part Number | Qty. | Description |
|---|---|---|---|
| 10 | 112-8404 | 4 | Piston (STD) |
| 10 | 112-8414 | 4 | Piston (+0.5Mm) |
| 20 | 98-9551 | 4 | Piston Ring ASM (STD) |
| 20 | 108-1404 | 4 | Piston Ring ASM (+0.5Mm) |
| 30 | 98-9513 | 4 | Pin-Piston |
| 40 | 98-9514 | 8 | Circlip-Pin, Piston |
| 50 | 117-7586 | 4 | Connecting Rod ASM |
| 60 | 115-3014 | 4 | Bushing-Pin, Piston |
| 70 | 98-9517 | 8 | Bolt-Rod, Connecting |
| 80 | 98-9520 | 4 | Bearing-Rod (0.4Mm) |
| 80 | 98-9519 | 4 | Bearing-Rod (-0.2Mm) |
| 80 | 98-9518 | 4 | Metal-Crankpin (STD) |
| 90 | 105-3718 | 1 | Crankshaft ASM |
| 110 | 98-9532 | 1 | Gear-Crankshaft |
| 120 | 98-9666 | 1 | Key |
| 130 | 98-9542 | 1 | Gear-Drive, Oil Pump |
| 140 | 98-9522 | 1 | Sleeve-Crankshaft |

| Ref. | Part Number | Qty. | Description |
|---|---|---|---|
| 150 | 98-9521 | 1 | Collar-Crankshaft |
| 160 | 105-3783 | 1 | O-Ring |
| 170 | 98-9523 | 1 | Metal Crankshaft (STD) |
| 170 | 98-9528 | 1 | Bearing-Main (-0.2Mm) |
| 170 | 98-9529 | 1 | Bearing-Main (0.4Mm) |
| 180 | 98-9524 | 3 | Metal-Crankshaft (STD Set) |
| 180 | 127-0433 | 3 | Metal-Crankshaft (-0.2Mm) |
| 180 | 98-9531 | 3 | Bearing-Main (0.4Mm) |
| 190 | 112-7006 | 1 | Bearing-Main (STD) |
| 190 | 112-7007 | 1 | Metal-Crankshaft (.2Mm) |
| 190 | 112-7008 | 1 | Metal-Crankshaft (.4Mm) |
| 200 | 112-7045 | 2 | Metal-Crankshaft |
| 200 | 112-7039 | 2 | Metal-Crankshaft (0.2Mm) |
| 200 | 112-7040 | 2 | Metal-Crankshaft (-0.4Mm) |
| 210 | 98-9688 | 2 | Bearing-Thrust (STD) |
| 210 | 127-0437 | 2 | Metal-Side (+0.2Mm) |
| 210 | 127-0438 | 2 | Metal-Side (+0.40Mm) |

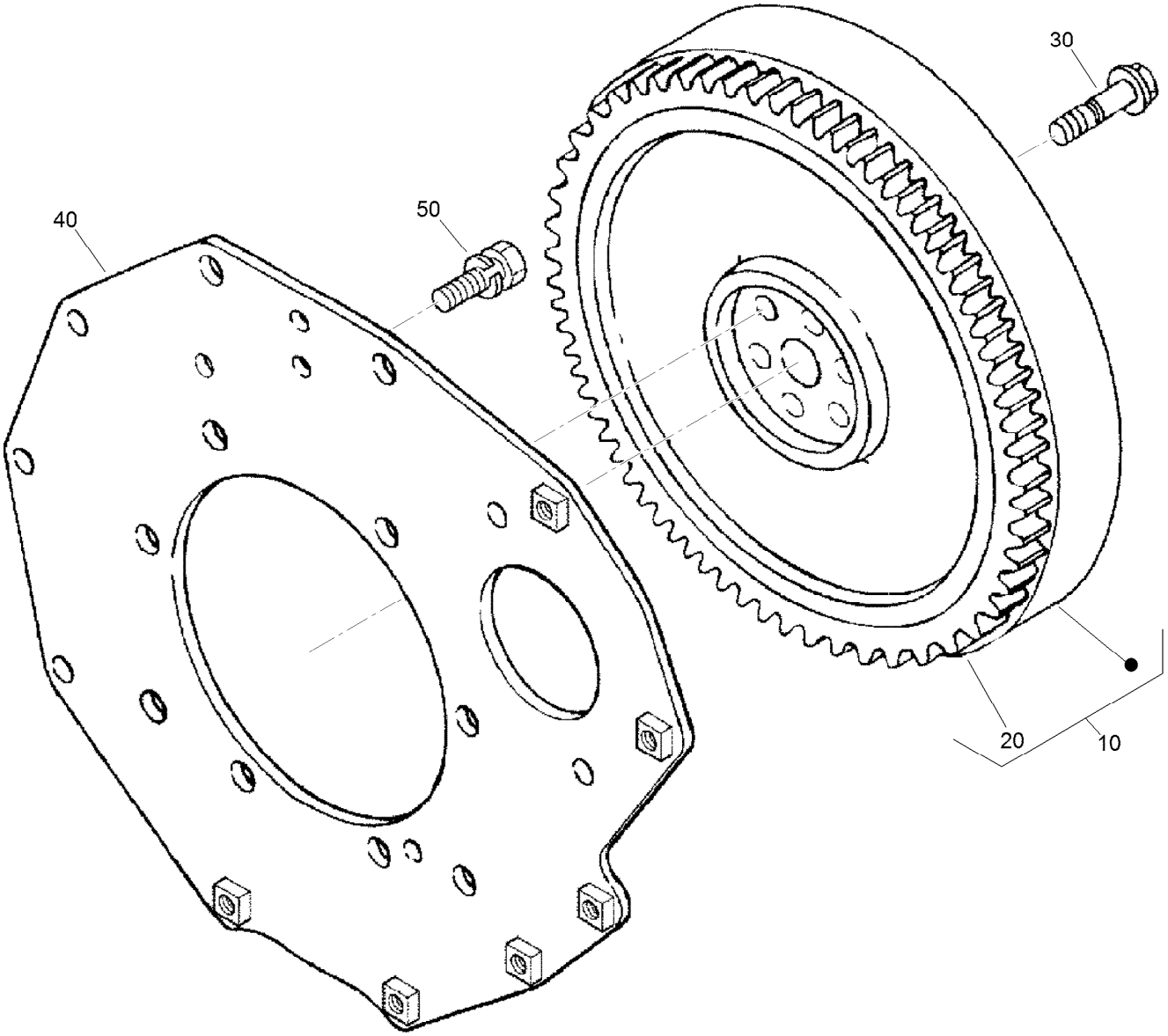


# Flywheel Assembly

| Ref. | Part Number | Qty. | Description |
|---|---|---|---|
| 10 | 105-3721 | 1 | Flywheel ASM |
| 20 | 115-3015 | 1 | Gear-Ring |
| 30 | 98-9537 | 6 | Bolt-Flywheel |
| 40 | 98-9486 | 1 | Plate-End, Rear |
| 50 | 98-9392 | 8 | Bolt |

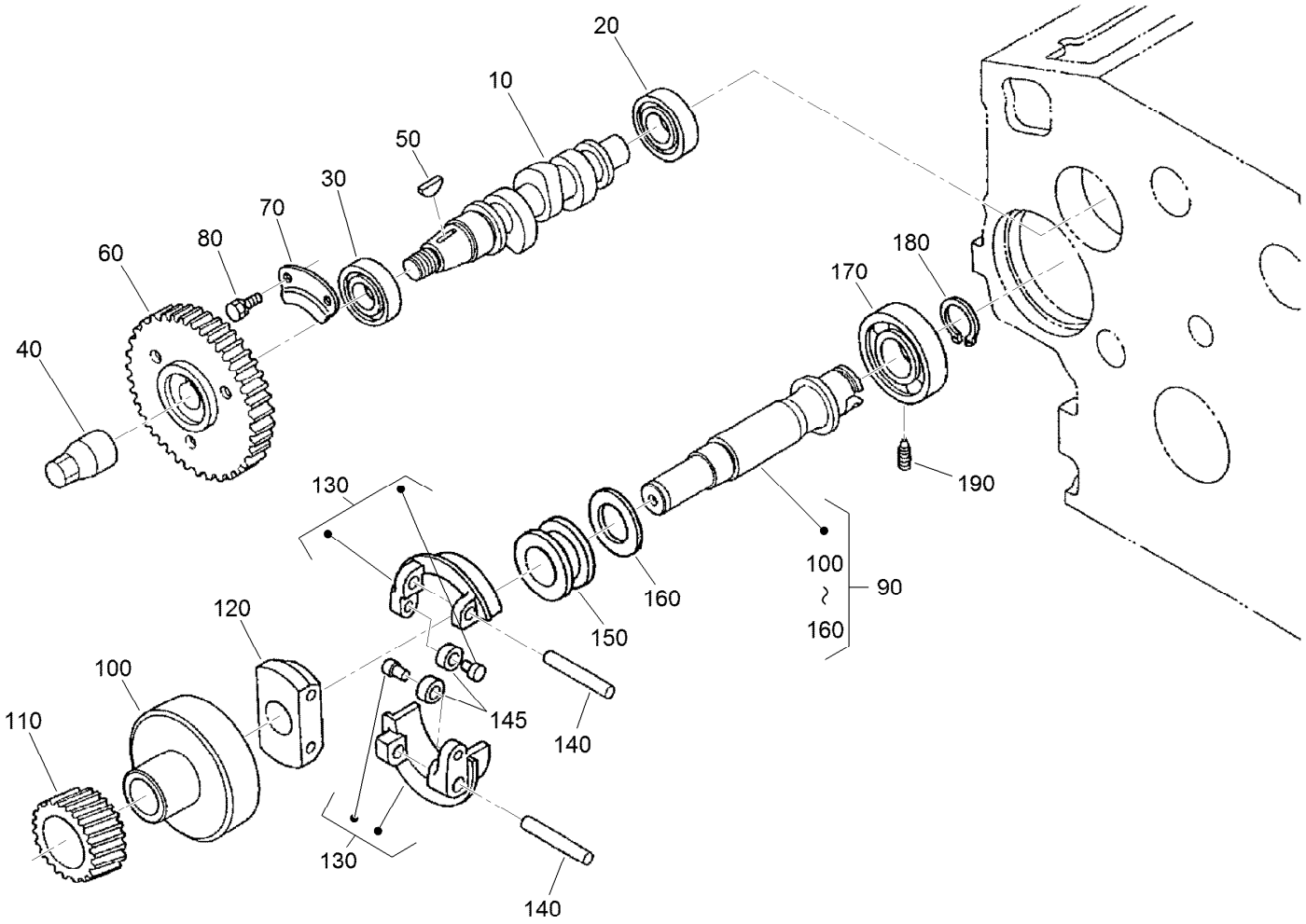


# Fuel Camshaft and Governor Shaft Assembly

| Ref. | Part Number | Qty. | Description |
|---|---|---|---|
| 10 | 105-3723 | 1 | Camshaft-Fuel |
| 20 | 107-9077 | 1 | Bearing-Ball |
| 30 | 107-9078 | 1 | Bearing-Ball |
| 40 | 98-9590 | 1 | Nut-Cap |
| 50 | 98-9595 | 1 | Key-Woodruff |
| 60 | 98-9669 | 1 | Gear-Pump, Injection |
| 70 | 98-9511 | 1 | Stopper-Fuel, Camshaft |
| 80 | 98-7692 | 2 | Bolt |
| 90 | 105-3724 | 1 | Governor Shaft ASM |
| 100 | 98-9562 | 1 | Holder-Gear, Governor |

| Ref. | Part Number | Qty. | Description |
|---|---|---|---|
| 110 | 98-9673 | 1 | Gear-Governor |
| 120 | 98-9561 | 1 | Holder-Weight, Governor |
| 130 | 98-9559 | 2 | Governor Weight ASM |
| 140 | 98-9560 | 2 | Shaft-Weight, Governor |
| 145 | 98-9692 | 2 | Roller |
| 150 | 98-9563 | 1 | Sleeve-Governor |
| 160 | 98-9564 | 1 | Washer-Thrust |
| 170 | 107-9079 | 1 | Bearing-Ball |
| 180 | 98-9657 | 1 | Circlip-Shaft, Governor |
| 190 | 98-9565 | 1 | Screw-Set |

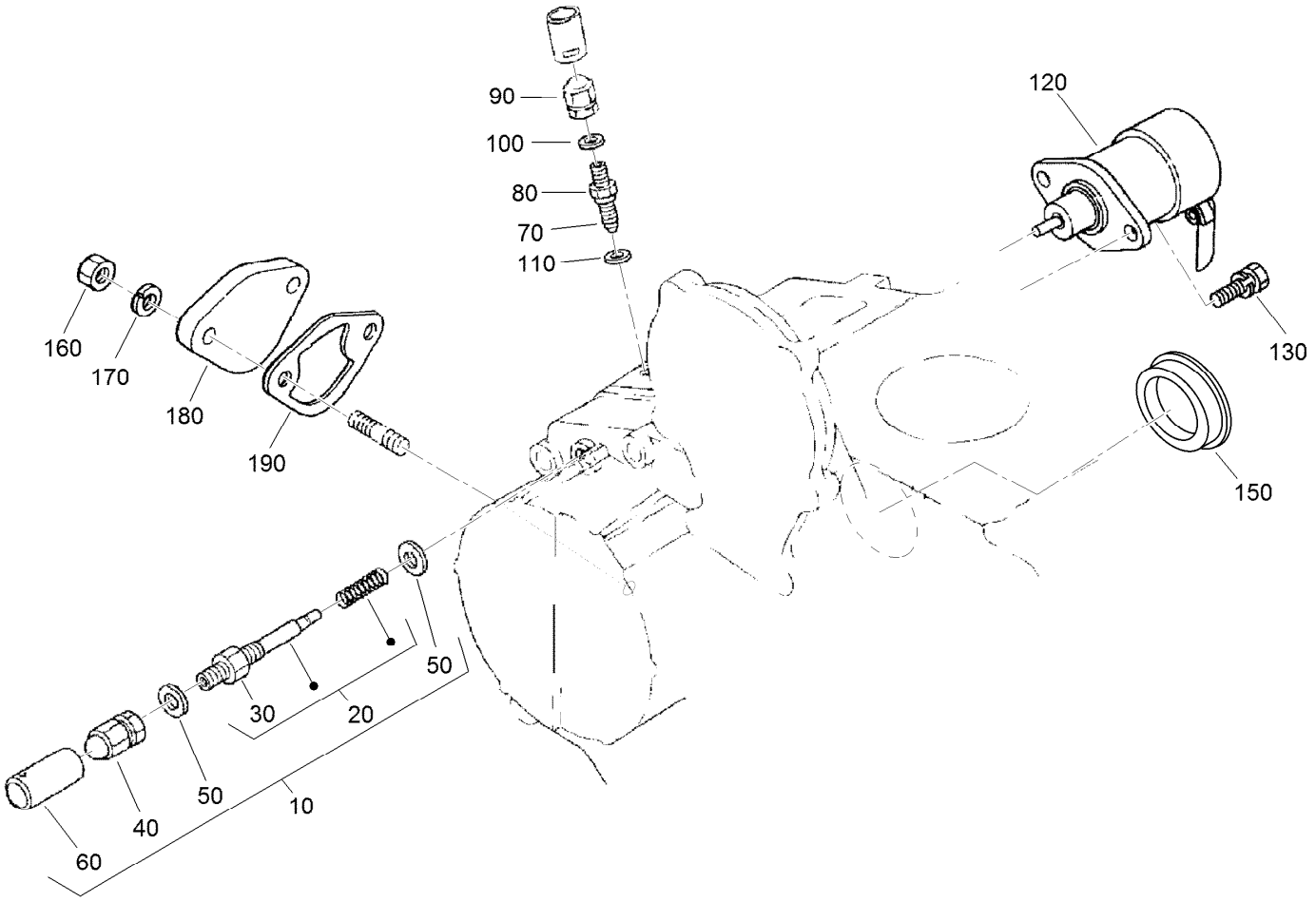


# Idle Apparatus Assembly

| *Ref.* | *Part Number* | *Qty.* | *Description* |
|---|---|---|---|
| 10 | 98-9678 | 1 | Idle Apparatus ASM |
| 20 | 112-7014 | 1 | Adjusting Bolt ASM |
| 30 | 98-9439 | 1 | Nut |
| 40 | 112-0181 | 1 | Nut |
| 50 | 98-7654 | 2 | Gasket |
| 60 | 98-7656 | 1 | Cap |
| 70 | 112-7015 | 1 | Bolt-Adjusting |
| 80 | 100-2175 | 1 | Nut-Lock |
| 90 | 112-0181 | 1 | Nut |
| 100 | 98-7654 | 1 | Gasket |
| 110 | 107-9081 | 1 | Gasket |
| 120 | 104-5155 | 1 | Solenoid-Stop |
| 130 | 115-3039 | 2 | Bolt-HSH |
| 150 | 112-7016 | 1 | Cover-Pump |
| 160 | 98-7572 | 2 | Nut |
| 170 | 98-7699 | 2 | Washer-Spring |
| 180 | 99-3514 | 1 | Cover |
| 190 | 98-9636 | 1 | Gasket-Pump, Fuel |

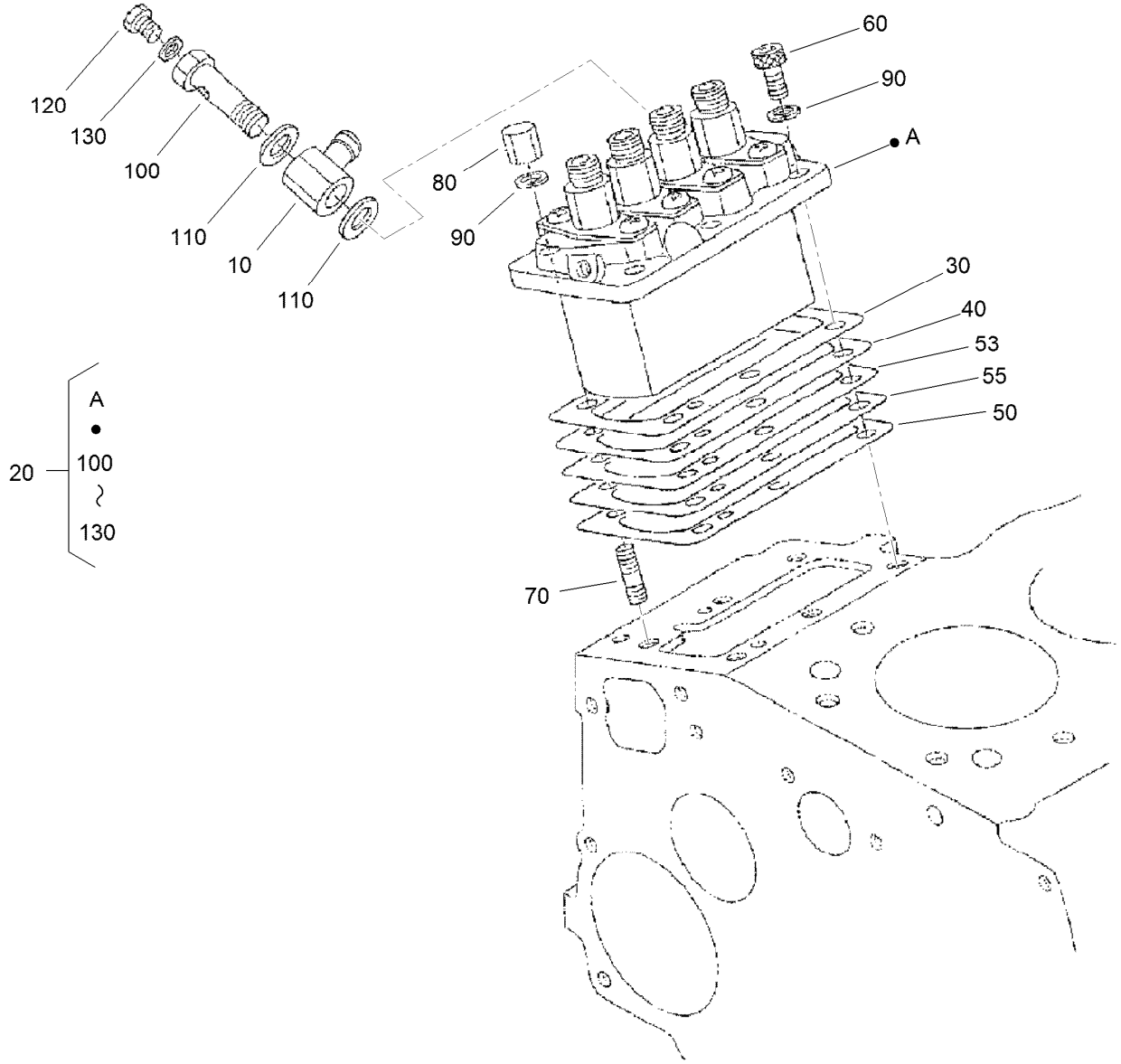


# Injection Pump Assembly

| Ref. | Part Number | Qty. | Description |
|---|---|---|---|
| 10 | 98-9596 | 1 | Joint-Eye |
| 20 | 105-3727 | 1 | Injection Pump ASM |
| 30 | 105-3728 | 1 | Shim-Pump, Injection (.20Mm) |
| 40 | 105-3729 | 1 | Shim-Pump, Injection (.25Mm) |
| 50 | 105-3730 | 1 | Shim-Pump, Injection (.30Mm) |
| 53 | 115-3016 | 1 | Shim-Pump, Injection (.350Mm) |
| 55 | 115-3017 | 1 | Shim-Pump, Injection (.175Mm) |
| 60 | 98-9361 | 3 | Bolt-HSH |
| 70 | 98-9438 | 3 | Stud |
| 80 | 98-9440 | 3 | Nut-Cap |
| 90 | 98-7699 | 6 | Washer-Spring |
| 100 | 98-9464 | 1 | Bolt-Joint |
| 110 | 98-9445 | 2 | Gasket |
| 120 | 98-9430 | 1 | Screw |
| 130 | 98-9446 | 1 | Gasket |

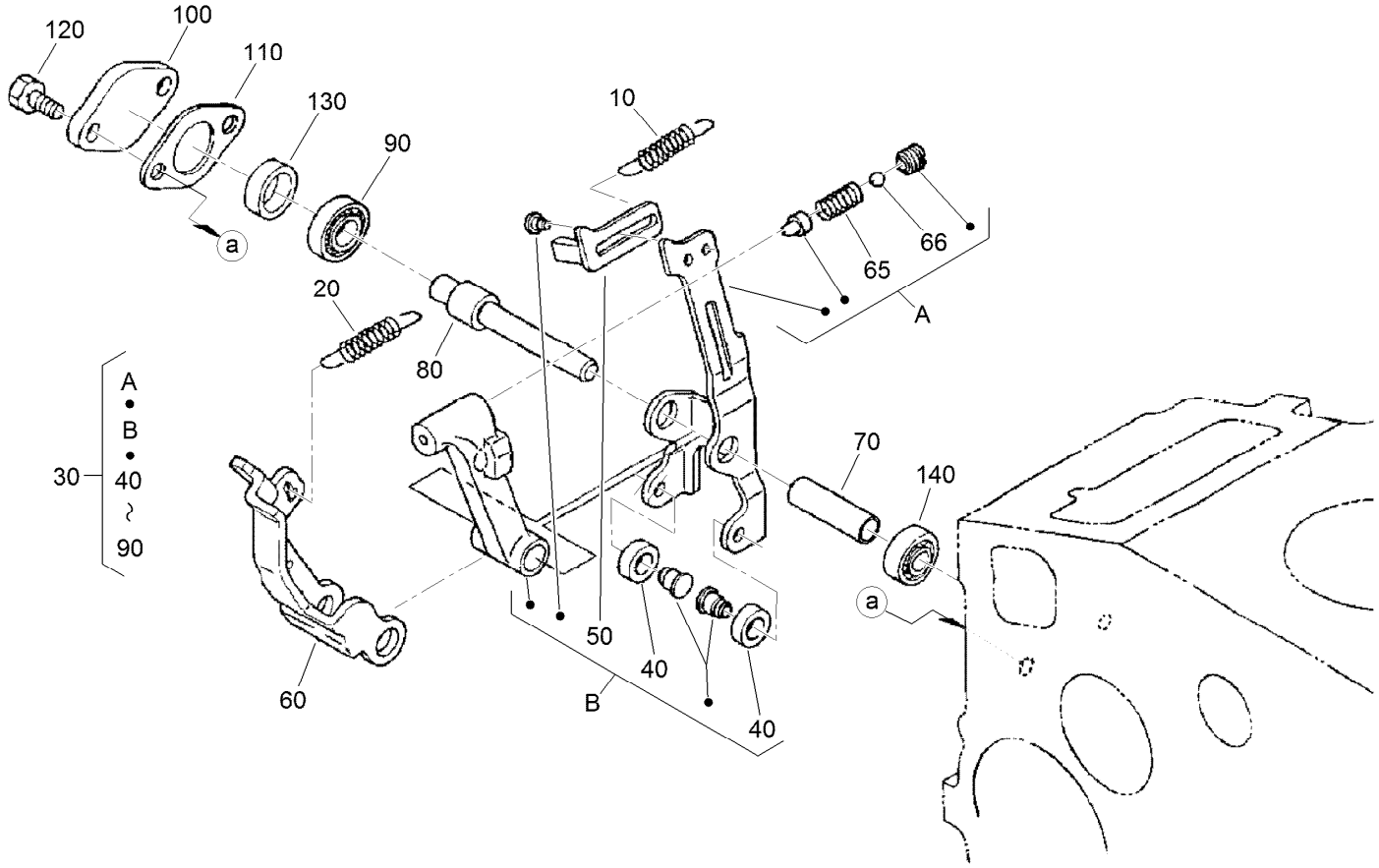


# Governor Assembly

| Ref. | Part Number | Qty. | Description |
|---|---|---|---|
| 10 | 105-3741 | 1 | Spring-Start |
| 20 | 98-9681 | 1 | Spring-Governor |
| 30 | 115-4502 | 1 | Fork Lever ASM |
| 40 | 98-9692 | 2 | Roller |
| 50 | 107-9083 | 1 | Lever-Thrust |
| 60 | 107-9084 | 1 | Lever-Fork |
| 65 | 108-2867 | 1 | Spring |
| 66 | 98-7580 | 2 | Ball |

| Ref. | Part Number | Qty. | Description |
|---|---|---|---|
| 70 | 107-9085 | 1 | Shaft-Lever, Fork |
| 80 | 107-9086 | 1 | Shaft-Lever, Fork |
| 90 | 98-9570 | 1 | Bearing-Miniaturize |
| 100 | 115-4122 | 1 | Cover-Shaft, Fork Lever |
| 110 | 98-9682 | 1 | Gasket |
| 120 | 98-9350 | 2 | Bolt |
| 130 | 98-9567 | 1 | Collar |
| 140 | 98-9571 | 1 | Bearing-Miniaturize |

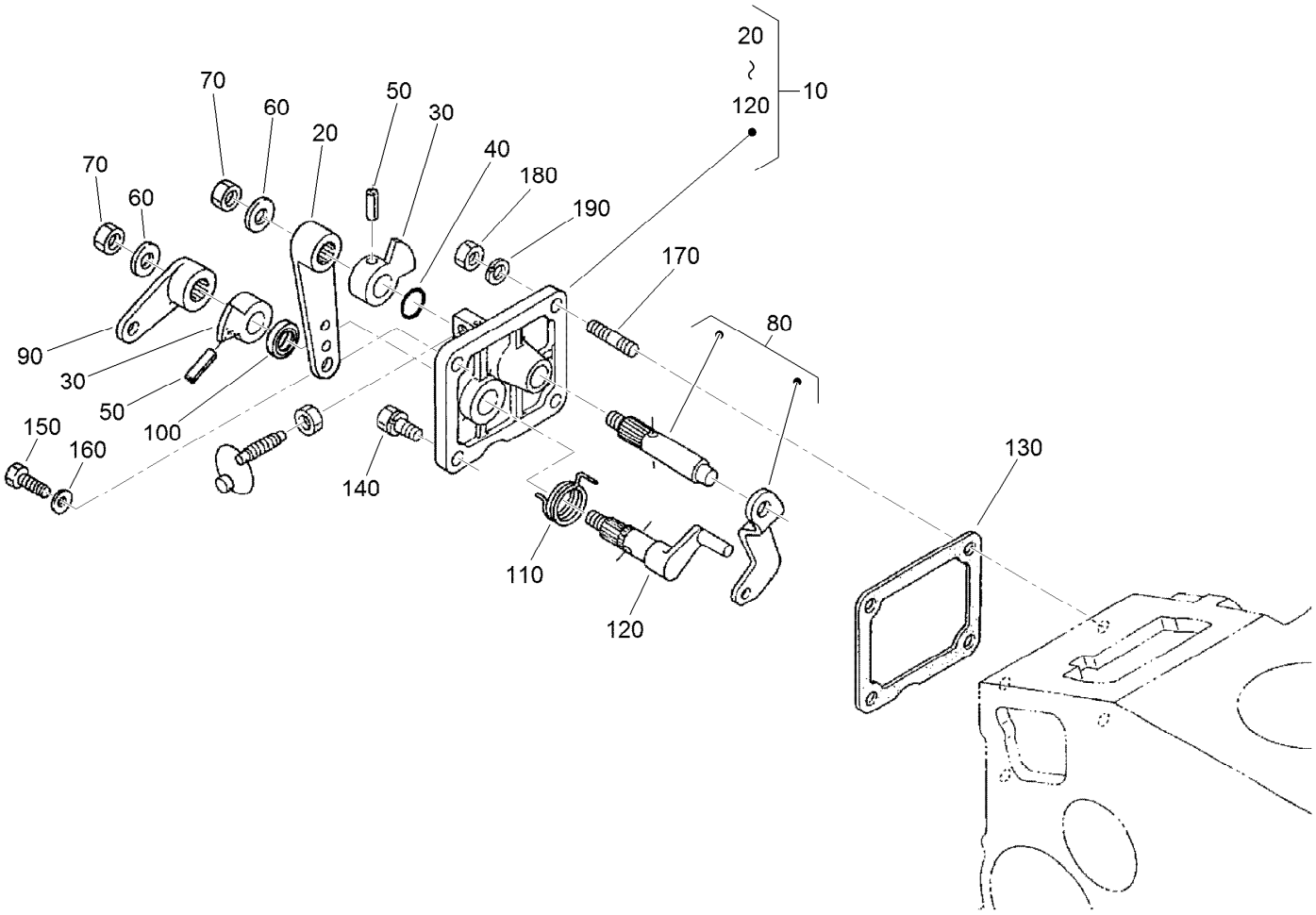


# Speed Control Plate Assembly

| Ref. | Part Number | Qty. | Description |
|---|---|---|---|
| 10 | 105-3735 | 1 | Control Plate ASM |
| 20 | 98-9662 | 1 | Lever-Control, Speed |
| 30 | 98-9572 | 2 | Lever-Control, Speed |
| 40 | 105-3788 | 1 | O-Ring |
| 50 | 98-7602 | 2 | Pin-Spring |
| 60 | 98-9594 | 2 | Washer-Plain |
| 70 | 98-9589 | 2 | Nut |
| 80 | 98-9658 | 1 | Governor Lever ASM |
| 90 | 98-9663 | 1 | Lever-Stop, Engine |
| 100 | 98-7601 | 1 | Seal-Oil |

| Ref. | Part Number | Qty. | Description |
|---|---|---|---|
| 110 | 98-9472 | 1 | Spring-Return |
| 120 | 98-9664 | 1 | Shaft-Lever, Stop |
| 130 | 98-9637 | 1 | Gasket |
| 140 | 98-7692 | 1 | Bolt |
| 150 | 99-8348 | 1 | Bolt |
| 160 | 98-7654 | 2 | Gasket |
| 170 | 105-3710 | 2 | Stud |
| 180 | 98-7572 | 2 | Nut |
| 190 | 98-7699 | 2 | Washer-Spring |

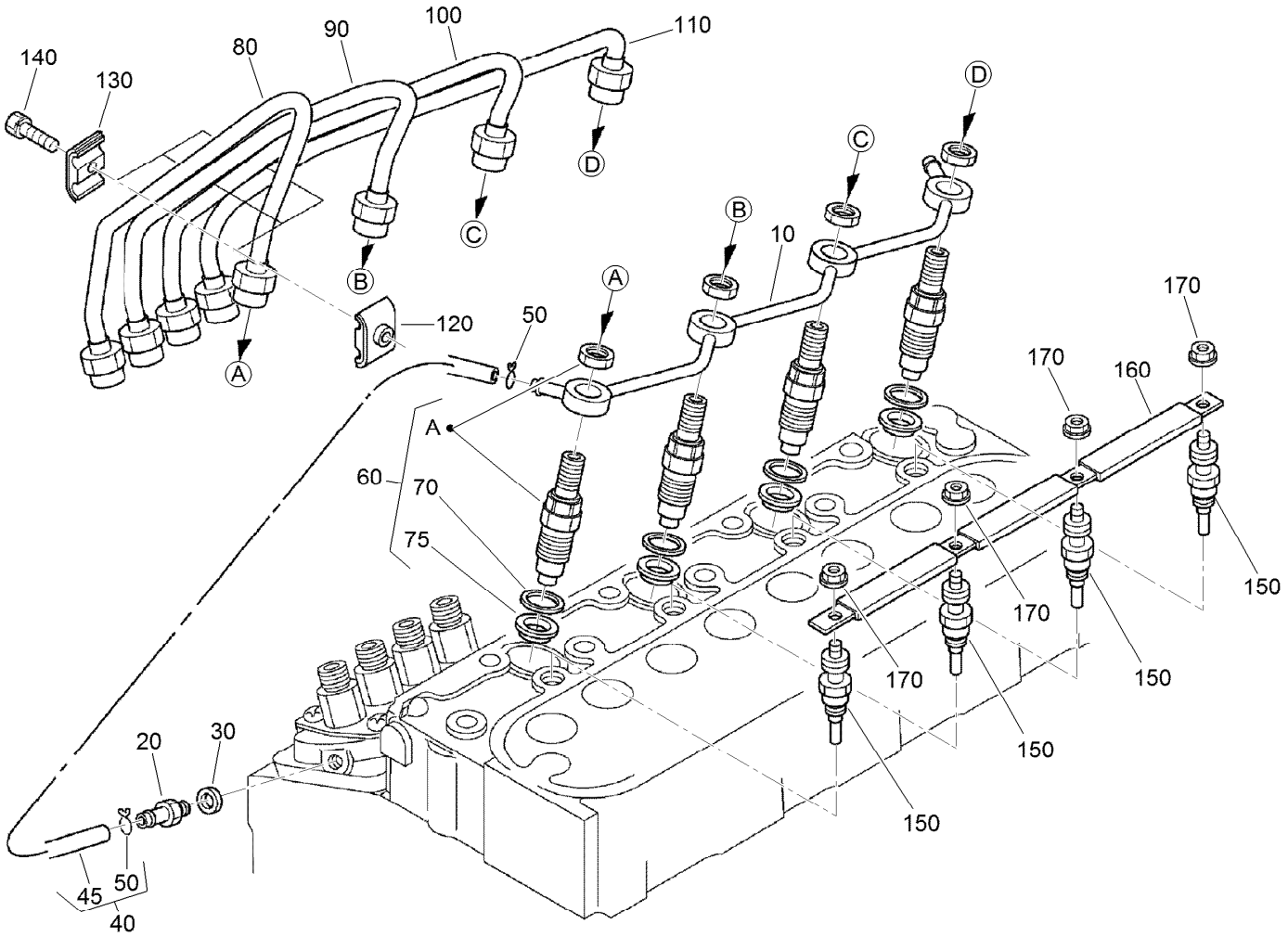


# Nozzle Holder and Glow Plug Assembly

| Ref. | Part Number | Qty. | Description |
|---|---|---|---|
| 10 | 105-3737 | 1 | Over Flow Pipe ASM |
| 20 | 98-9431 | 1 | Screw-Bleeder, Air |
| 30 | 98-7654 | 1 | Gasket |
| 40 | 98-9420 | 1 | Overflow Pipe ASM |
| 45 | 112-0182 | 1 | Pipe-Overflow |
| 50 | 98-7671 | 2 | Clip-Pipe |
| 60 | 115-3018 | 4 | Nozzle Holder Kit |
| 70 | 98-7676 | 4 | Gasket |
| 75 | 98-7677 | 4 | Seal-Heat |
| 80 | 98-9653 | 1 | Pipe-Injection |

| Ref. | Part Number | Qty. | Description |
|---|---|---|---|
| 90 | 98-9654 | 1 | Pipe-Injection |
| 100 | 98-9655 | 1 | Pipe-Injection |
| 110 | 105-3738 | 1 | Pipe-Injection |
| 120 | 98-7682 | 3 | Clamp-Pipe |
| 130 | 98-7683 | 3 | Clamp-Pipe |
| 140 | 98-7684 | 3 | Screw (W/Washer) |
| 150 | 115-3019 | 4 | Plug-Glow |
| 160 | 105-3739 | 1 | Cord-Plug, Glow |
| 170 | 99-8377 | 4 | Nut-Flange |

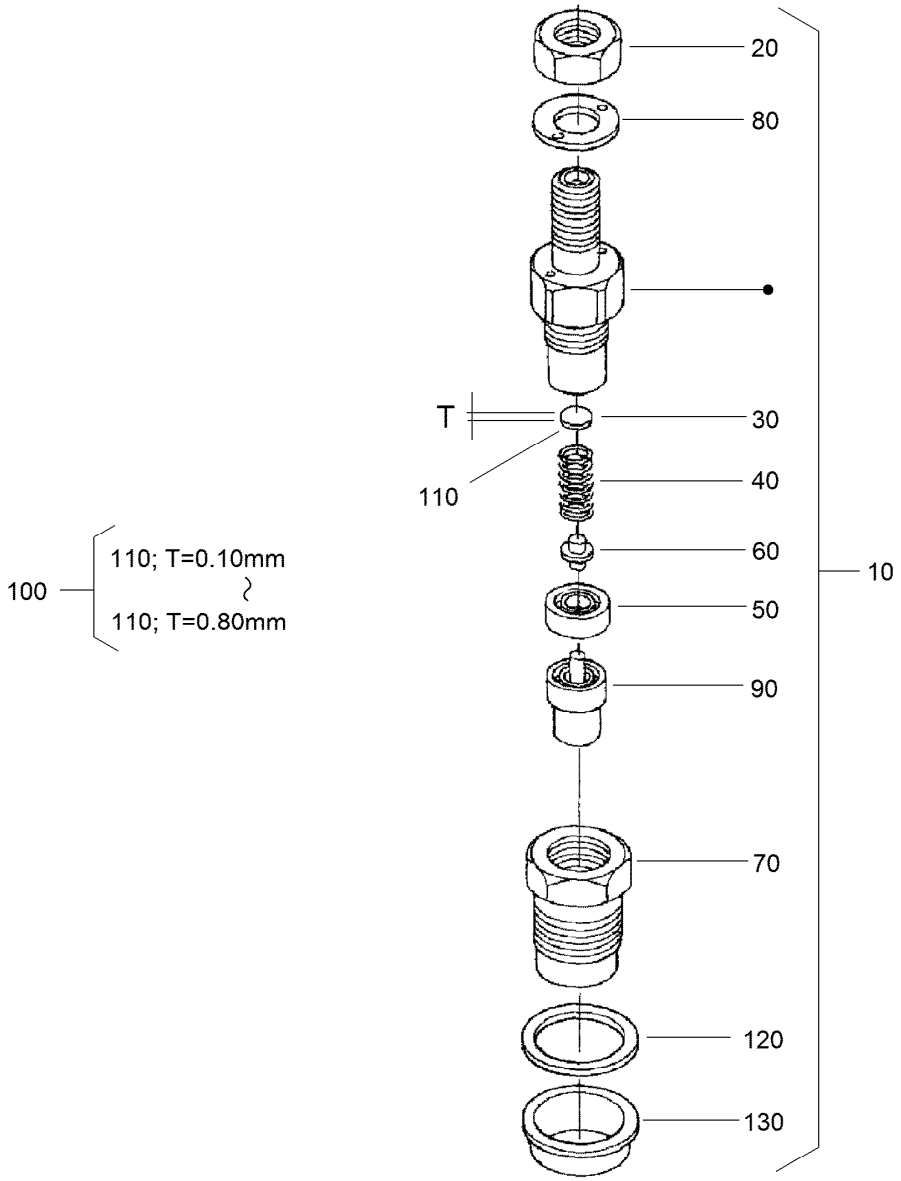


# Nozzle Holder Component Assembly

| Ref. | Part Number | Qty. | Description |
|---|---|---|---|
| 10 | 115-3018 | 4 | Nozzle Holder Kit |
| 20 | 99-8301 | 4 | Nut |
| 30 | 99-8302 | 4 | Washer-Adjusting |
| 40 | 99-8303 | 4 | Spring-Nozzle |
| 50 | 99-8304 | 4 | Spacer-Distance |
| 60 | 99-8305 | 4 | Rod-Push |
| 70 | 99-8306 | 4 | Nut-Nozzle |
| 80 | 99-8307 | 4 | Washer-Plain |
| 90 | 115-3020 | 4 | Piece-Nozzle |
| 100 | 99-8309 | 4 | Adjusting Washer ASM |
| 110 | 99-8310 | 4 | Washer-Adjust (0.10Mm) |

| Ref. | Part Number | Qty. | Description |
|---|---|---|---|
| 110 | 99-8311 | 4 | Washer-Adjust (0.20Mm) |
| 110 | 99-8312 | 4 | Washer-Adjust (0.30Mm) |
| 110 | 99-8313 | 4 | Washer-Adjust (0.40Mm) |
| 110 | 99-8314 | 4 | Washer-Adjust (0.50Mm) |
| 110 | 99-8315 | 4 | Washer-Adjust (0.52Mm) |
| 110 | 99-8316 | 4 | Washer-Adjust (0.54Mm) |
| 110 | 99-8317 | 4 | Washer-Adjust (0.56Mm) |
| 110 | 99-8318 | 4 | Washer-Adjust (0.58Mm) |
| 110 | 99-8319 | 4 | Washer-Adjust (0.80Mm) |
| 120 | 98-7676 | 4 | Gasket |
| 130 | 98-7677 | 4 | Seal-Heat |

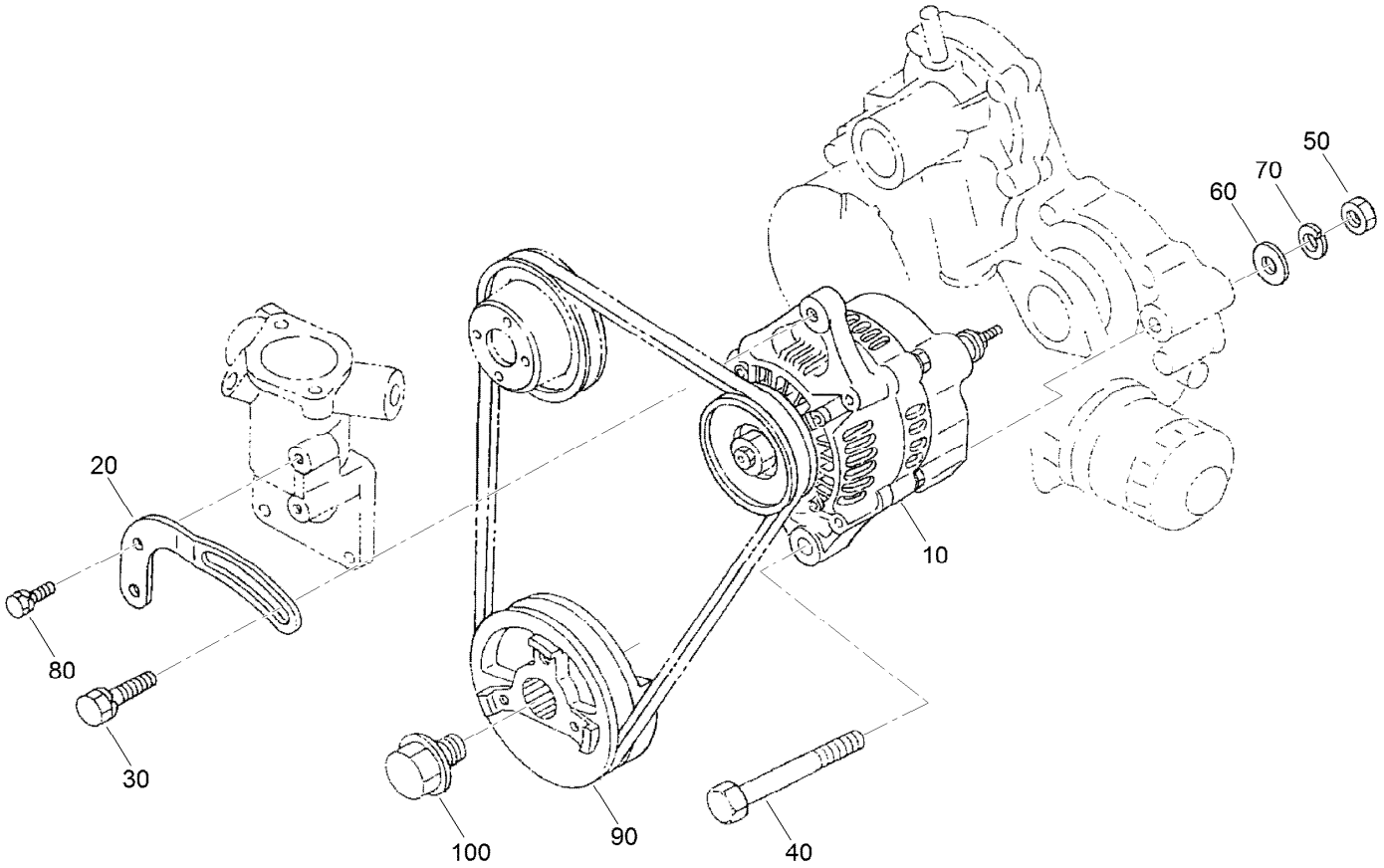


# Alternator and Pulley Assembly

| *Ref.* | *Part Number* | *Qty.* | *Description* |
|---|---|---|---|
| 10 | 98-9474 | 1 | Alternator ASM |
| 20 | 112-7047 | 1 | Stay-Dynamo |
| 30 | 108-7088 | 1 | Bolt |
| 40 | 98-9360 | 1 | Bolt |
| 50 | 98-7737 | 1 | Nut |
| 60 | 98-9366 | 1 | Washer-Plain |
| 70 | 98-7738 | 1 | Washer-Spring |
| 80 | 98-7692 | 1 | Bolt |
| 90 | 105-3745 | 1 | Pulley-Drive, Fan |
| 100 | 98-9585 | 1 | Bolt |

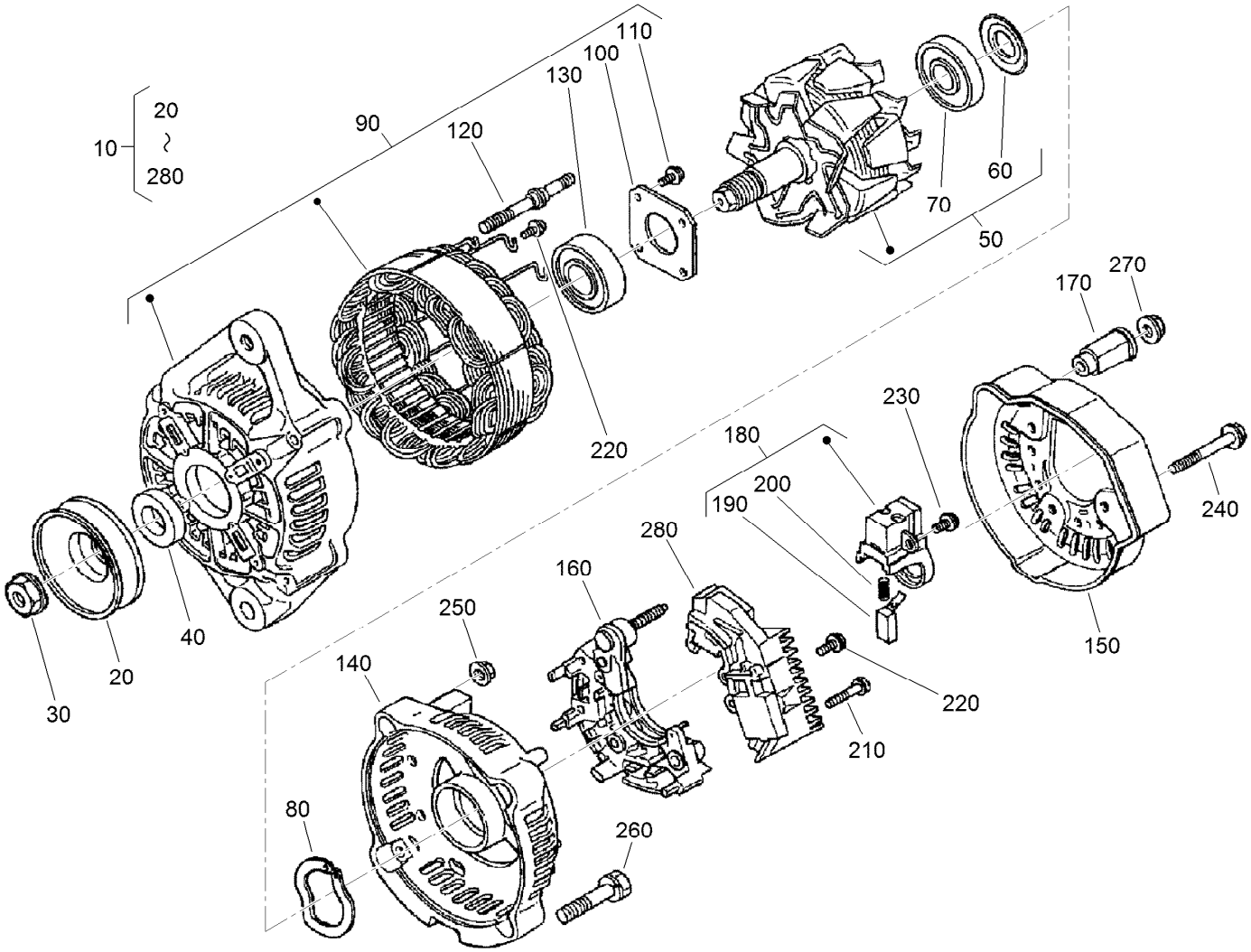


# Alternator Components Assembly

| Ref. | Part Number | Qty. | Description |
|---|---|---|---|
| 10 | 98-9474 | 1 | Alternator ASM |
| 20 | 98-9453 | 1 | Pulley-Dynamo |
| 30 | 98-7708 | 1 | Nut |
| 40 | 98-7709 | 1 | Collar |
| 50 | 107-0136 | 1 | Rotor ASM |
| 60 | 98-7711 | 1 | Cover-Bearing |
| 70 | 107-0138 | 1 | Bearing-Ball |
| 80 | 98-7713 | 1 | Washer-Thrust |
| 90 | 107-0139 | 1 | Drive End Frame ASM |
| 100 | 98-7715 | 1 | Plate-Retainer |
| 110 | 98-7716 | 4 | Screw-Head, Round |
| 120 | 98-7717 | 2 | Bolt-Through |
| 130 | 133-2811 | 1 | Bearing |
| 140 | 107-9087 | 1 | Frame-End |

| Ref. | Part Number | Qty. | Description |
|---|---|---|---|
| 150 | 107-0140 | 1 | Cover-End |
| 160 | 98-7721 | 1 | Rectifier ASM |
| 170 | 98-7722 | 1 | Bushing-Insulation |
| 180 | 107-0141 | 1 | Brush Holder ASM |
| 190 | 98-7724 | 2 | Brush |
| 200 | 98-7725 | 2 | Spring-Brush |
| 210 | 98-7726 | 2 | Screw-Head, Round |
| 220 | 98-7727 | 6 | Screw-Head, Round |
| 230 | 98-7728 | 1 | Screw-Head, Round |
| 240 | 98-7729 | 3 | Bolt |
| 250 | 98-7730 | 2 | Nut |
| 260 | 98-7731 | 2 | Bolt |
| 270 | 98-7732 | 1 | Nut |
| 280 | 110-3799 | 1 | Regulator ASM |

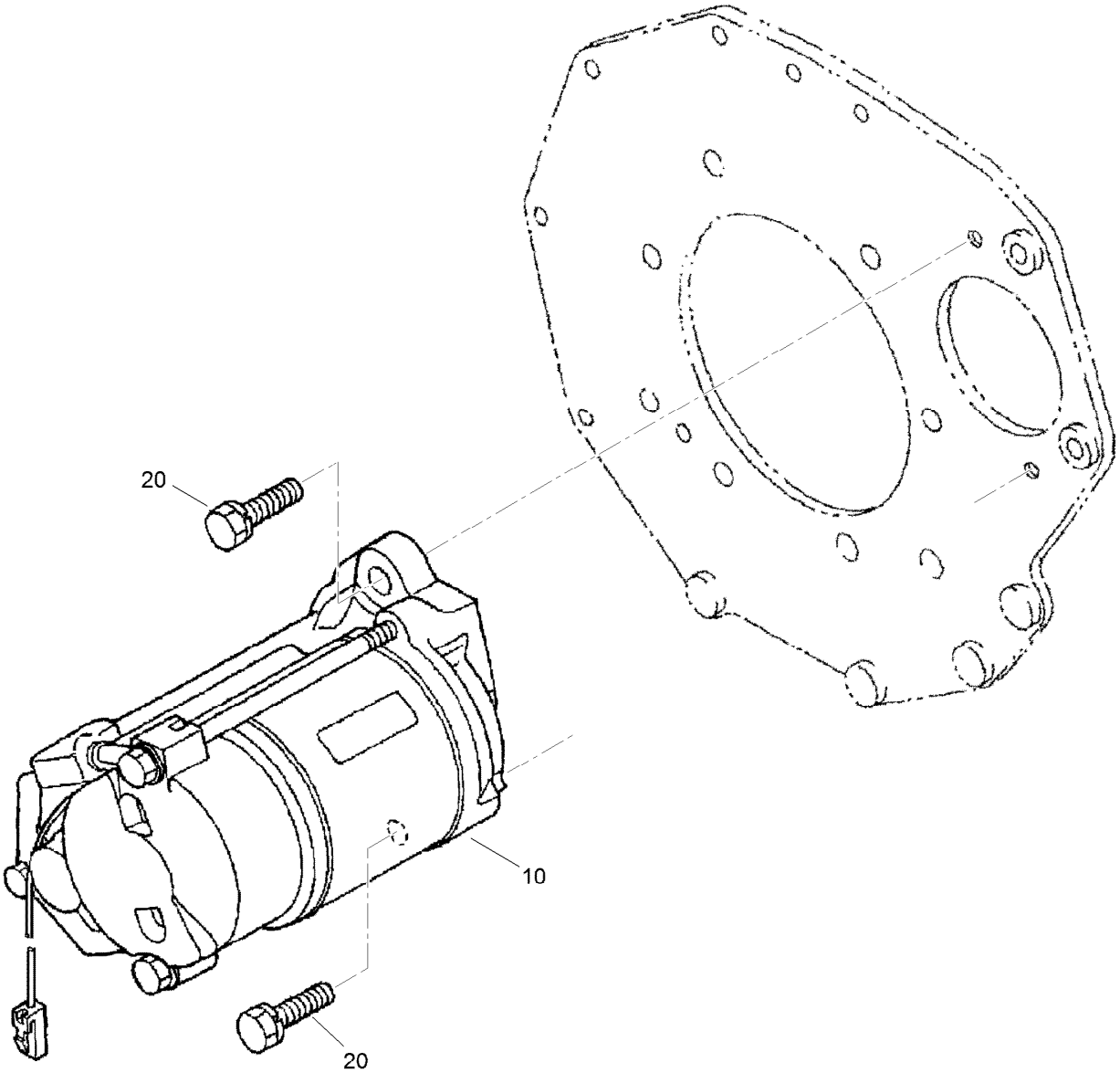


# Starter Assembly

| Ref. | Part Number | Qty. | Description |
|---|---|---|---|
| 10 | 98-9705 | 1 | Starter ASM |
| 20 | 98-7697 | 2 | Bolt |

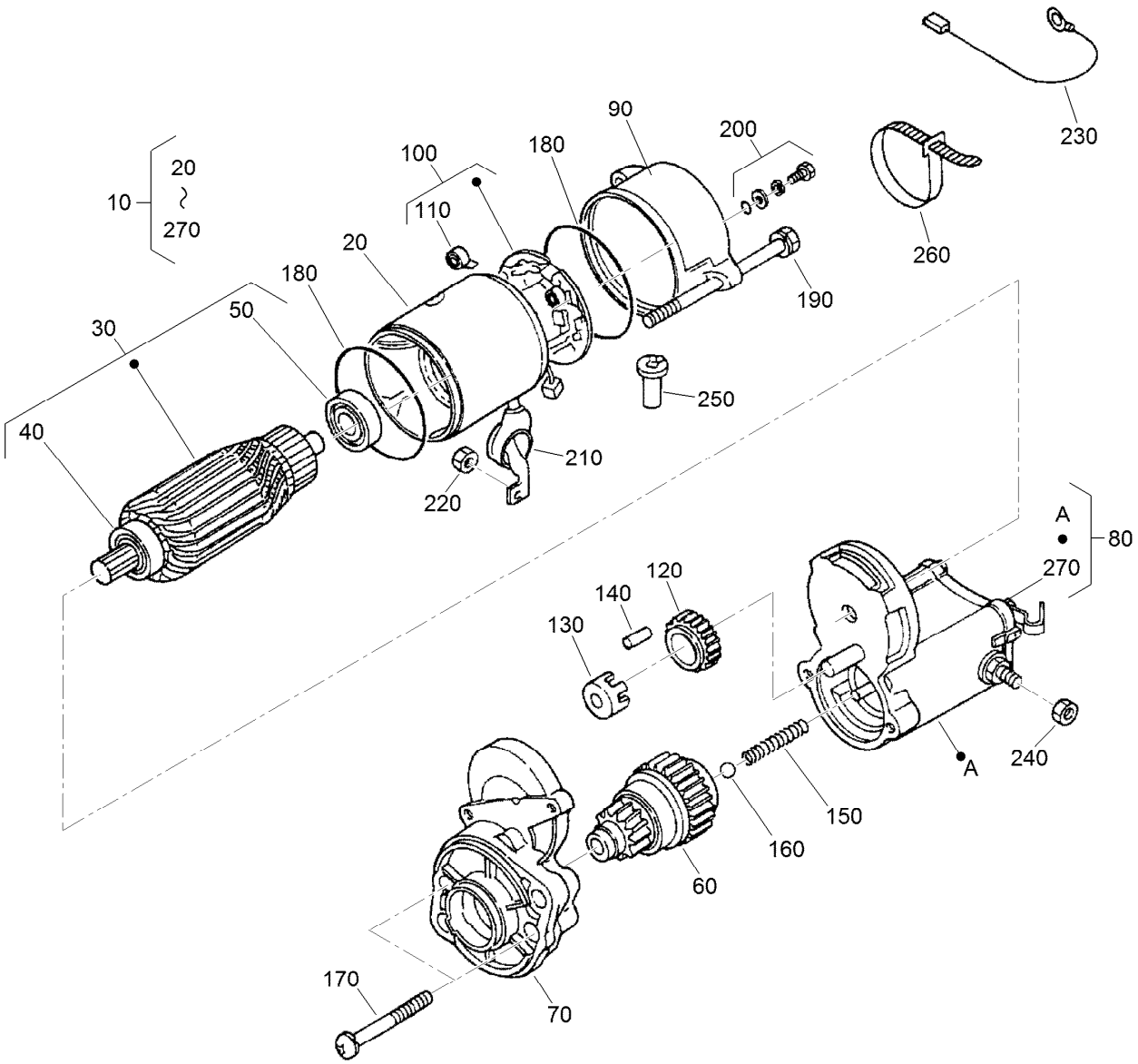


# Starter Component Part Assembly No. 111-7496

| Ref. | Part Number | Qty. | Description |
|---|---|---|---|
| 10 | 98-9705 | 1 | Starter ASM |
| 20 | 104-8608 | 1 | Yoke ASM |
| 30 | 98-7742 | 1 | Armature ASM |
| 40 | 98-7744 | 1 | Bearing |
| 50 | 98-7743 | 1 | Bearing |
| 60 | 99-8373 | 1 | Clutch-Running, Over |
| 70 | 99-8374 | 1 | Frame-End, Drive |
| 80 | 105-3746 | 1 | Magnetic Switch ASM |
| 90 | 98-7748 | 1 | Frame-End |
| 100 | 98-7749 | 1 | Brush Holder ASM |
| 110 | 98-7750 | 4 | Spring-Brush |
| 120 | 98-7751 | 1 | Gear |
| 130 | 98-7752 | 1 | Retainer |
| 140 | 98-7753 | 5 | Roller |

| Ref. | Part Number | Qty. | Description |
|---|---|---|---|
| 150 | 98-7754 | 1 | Spring |
| 160 | 98-7755 | 1 | Ball |
| 170 | 98-7756 | 2 | Bolt |
| 180 | 98-7757 | 2 | O-Ring |
| 190 | 100-9240 | 2 | Bolt |
| 200 | 98-7758 | 2 | Bolt ASM |
| 210 | 99-8375 | 1 | Cover |
| 220 | 99-8371 | 1 | Nut-Hex |
| 230 | 98-9711 | 1 | Cord-Solenoid, Stop |
| 240 | 99-8376 | 1 | Nut-Hex |
| 250 | 98-7759 | 1 | Pipe-Drain |
| 260 | 98-9712 | 1 | Band-Cover |
| 270 | 105-2886 | 1 | Cover ASM |

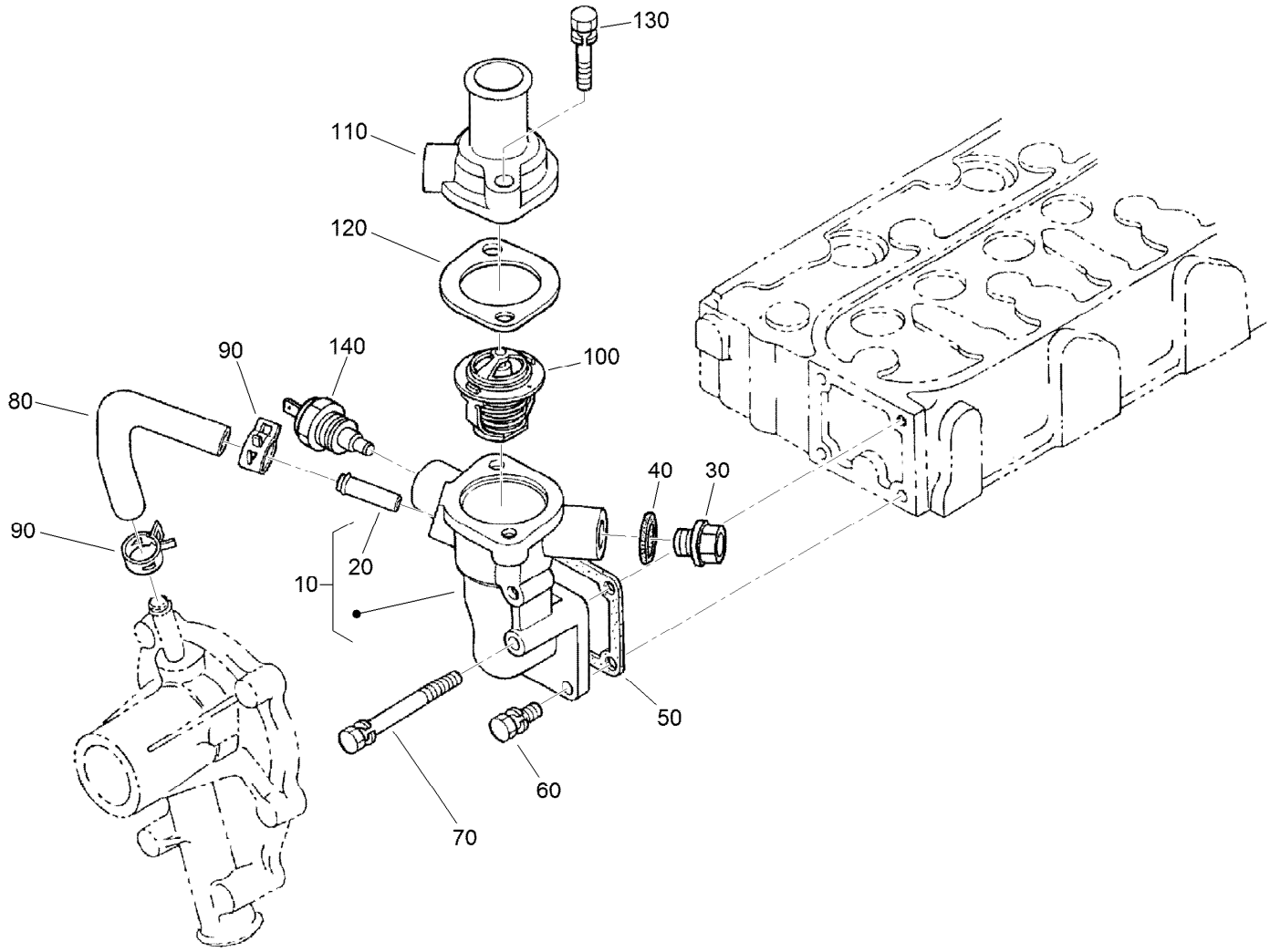


# Thermostat Assembly

| Ref. | Part Number | Qty. | Description |
|---|---|---|---|
| 10 | 98-9713 | 1 | Water Flange ASM |
| 20 | 98-9580 | 1 | Pipe-Return, Water |
| 30 | 105-3747 | 1 | Plug |
| 40 | 99-3583 | 1 | Gasket |
| 50 | 98-9638 | 1 | Gasket-Flange, Water |
| 60 | 98-7692 | 3 | Bolt |
| 70 | 98-9356 | 1 | Bolt |
| 80 | 98-9578 | 1 | Pipe-Return, Water |
| 90 | 98-9579 | 2 | Band-Pipe |
| 100 | 98-7778 | 1 | Thermostat ASM |
| 110 | 98-9471 | 1 | Cover-Thermostat |
| 120 | 105-3748 | 1 | Gasket-Thermostat |
| 130 | 98-7777 | 2 | Bolt |
| 140 | 112-0183 | 1 | Switch-Thermometer |

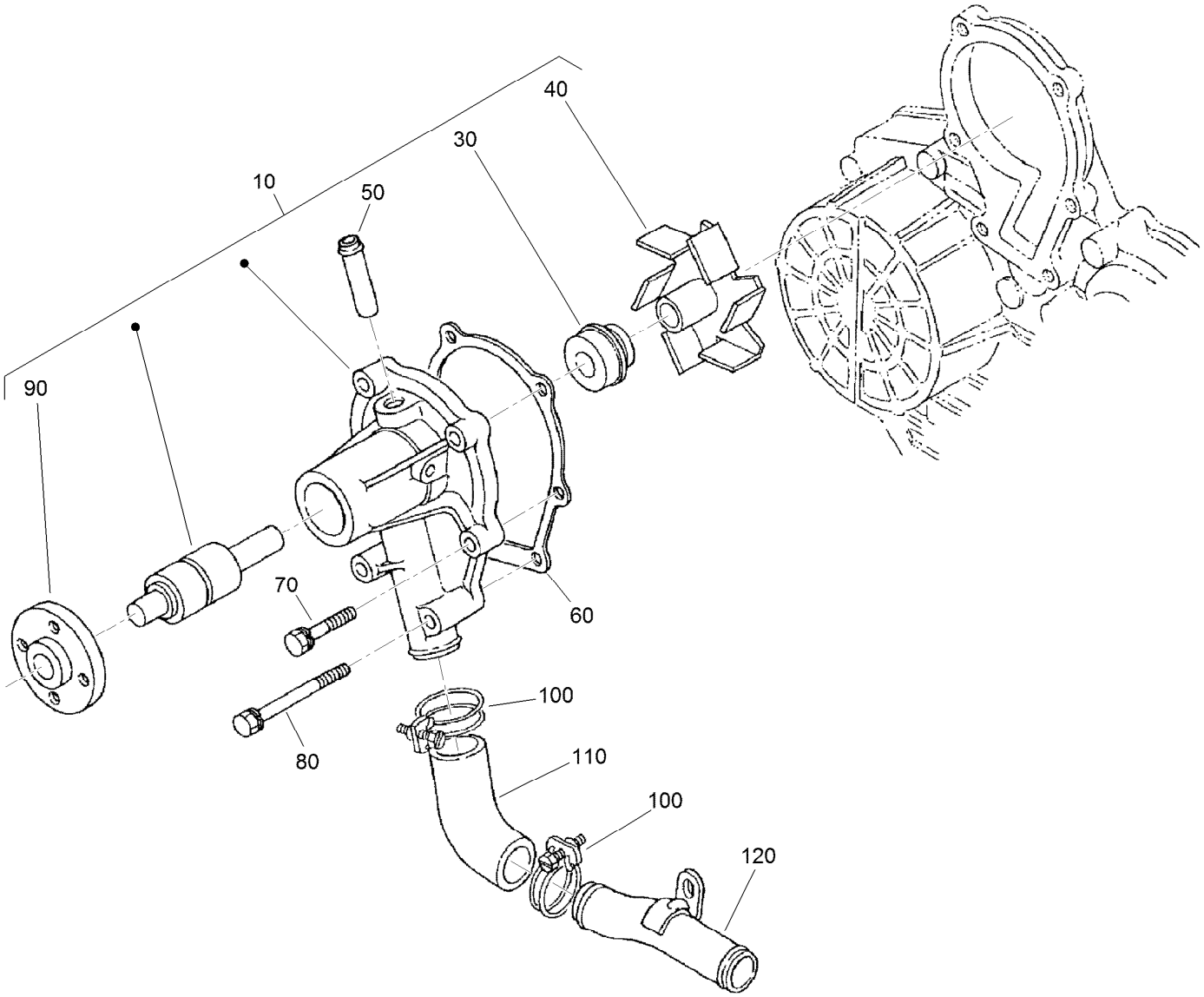


# Water Pump Assembly

| Ref. | Part Number | Qty. | Description |
|---|---|---|---|
| 10 | 107-9089 | 1 | Water Pump ASM |
| 30 | 105-3750 | 1 | Mechanical Seal ASM |
| 40 | 112-7017 | 1 | Impeller-Pump, Water |
| 50 | 100-1932 | 1 | Pipe-Return, Water |
| 60 | 99-3454 | 1 | Gasket-Pump, Water |
| 70 | 98-9353 | 4 | Bolt |
| 80 | 107-9090 | 2 | Bolt |
| 90 | 99-3516 | 1 | Flange-Pump, Water |
| 100 | 98-9717 | 2 | Clamp |
| 110 | 107-9091 | 1 | Pipe-Water |
| 120 | 98-9716 | 1 | Pipe-Water |

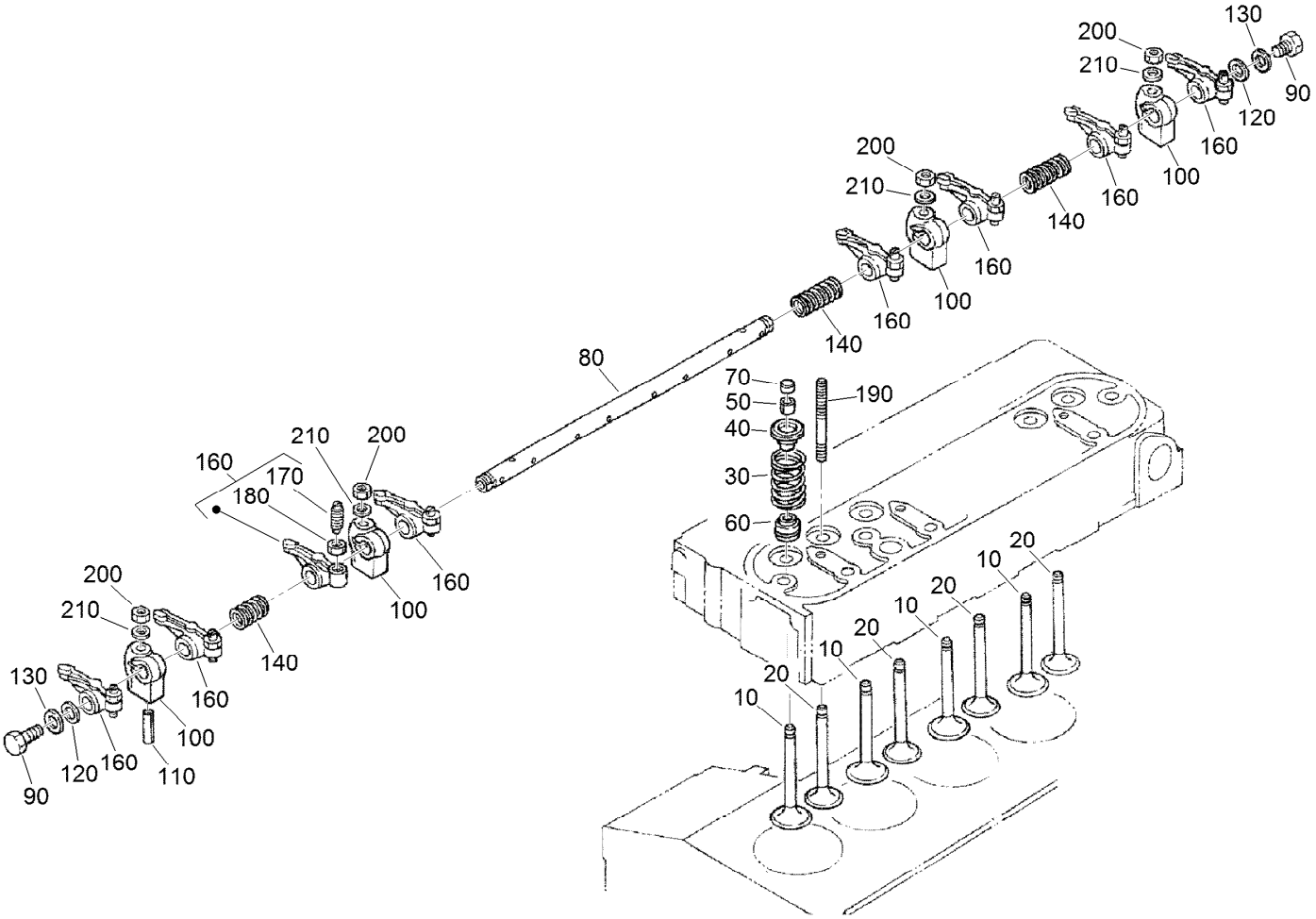


# Valve and Rocker Arm Assembly

| Ref. | Part Number | Qty. | Description |
|---|---|---|---|
| 10 | 112-7018 | 4 | Valve-Inlet |
| 20 | 112-7021 | 4 | Valve-Exhaust |
| 30 | 98-9648 | 8 | Spring-Valve |
| 40 | 107-9092 | 8 | Retainer-Spring |
| 50 | 98-9390 | 8 | Collet-Spring, Valve |
| 60 | 99-8385 | 8 | Seal-Stem, Valve |
| 70 | 98-9497 | 8 | Cap-Valve |
| 80 | 105-3790 | 1 | R-Arm Shaft ASM |
| 90 | 100-1762 | 2 | Bolt |
| 100 | 98-9505 | 4 | Bracket-Arm, Rocker |

| Ref. | Part Number | Qty. | Description |
|---|---|---|---|
| 110 | 105-3758 | 1 | Pin-Spring |
| 120 | 98-9507 | 2 | Washer-Shaft, Rocker Arm |
| 130 | 110-3832 | 2 | Washer-Plain |
| 140 | 98-9504 | 2 | Spring-Arm, Rocker |
| 160 | 112-7020 | 8 | Rocker Arm ASM |
| 170 | 98-9502 | 8 | Screw-Adjusting |
| 180 | 98-9503 | 8 | Nut |
| 190 | 98-9506 | 4 | Stud |
| 200 | 98-9393 | 4 | Nut |
| 210 | 98-9385 | 4 | Washer-Flat |

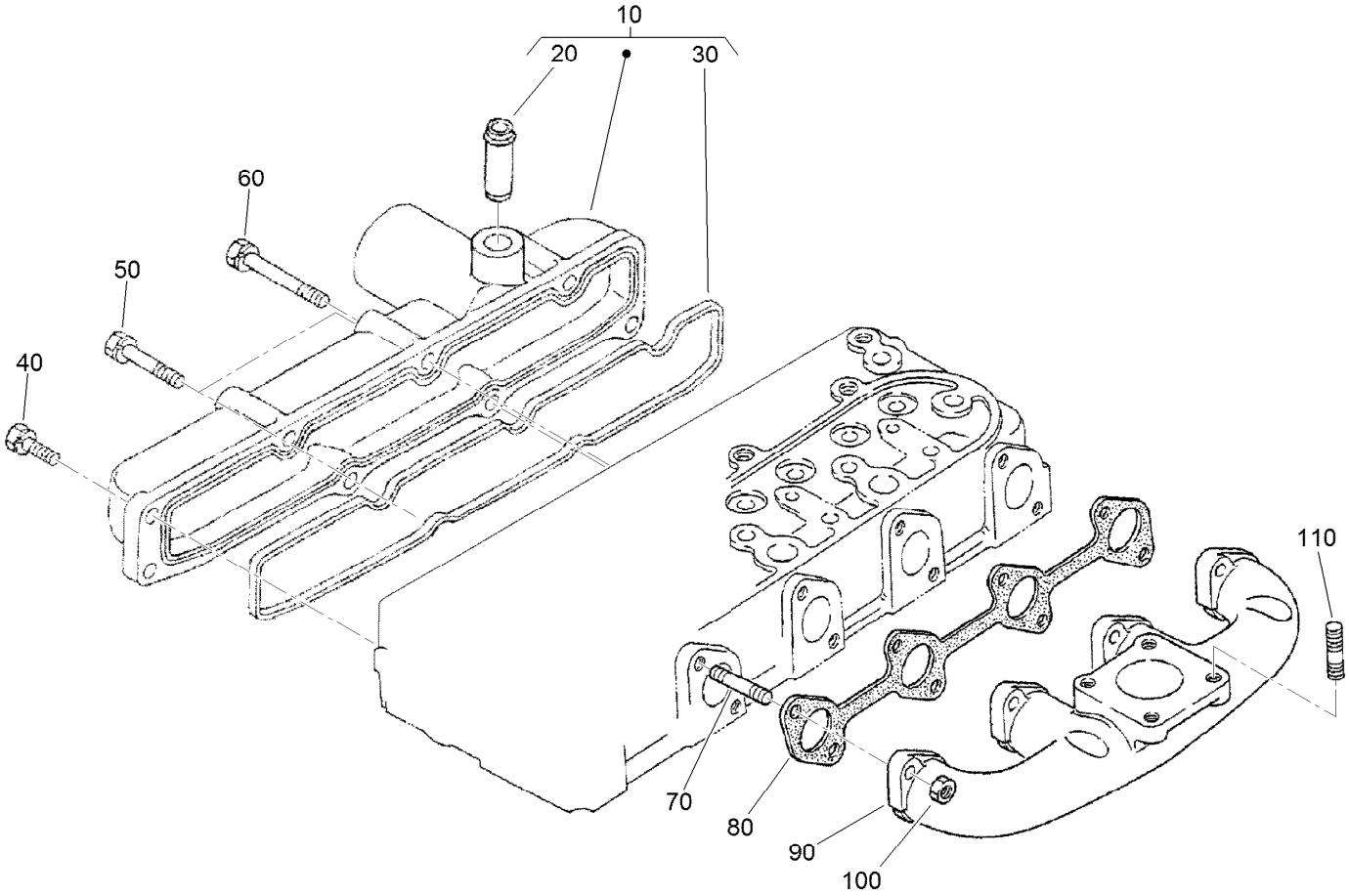


# Intake and Exhaust Manifold Assembly

| *Ref.* | *Part Number* | *Qty.* | *Description* |
|---|---|---|---|
| 10 | 108-2874 | 1 | Intake Manifold ASM |
| 20 | 98-9492 | 1 | Joint-Pipe, Breather |
| 30 | 105-3760 | 1 | Gasket-Manifold, Intake |
| 40 | 98-7605 | 3 | Bolt |
| 50 | 98-9353 | 2 | Bolt |
| 60 | 105-3797 | 3 | Bolt |
| 70 | 98-9588 | 8 | Stud |
| 80 | 105-3765 | 1 | Gasket-Manifold, Exhaust |
| 90 | 112-0187 | 1 | Manifold-Exhaust |
| 100 | 98-9665 | 8 | Nut |
| 110 | 98-7769 | 4 | Stud |

# Attachments and Accessories

## For 03676 Reelmaster 5510 Traction Unit

| Product Name | Model/Part |
|---|---|
| CrossTrax All-Wheel Drive Kit | 03655 |
| Air Ride Seat Suspension Kit | 03667 |
| Brush and Handle Kit | 29-9100 |
| Verticutter for 7in Reel Cutting Unit | 03619 |
| 8-Blade Radial Reel DPA Cutting Unit with 7in Reel | 03638 |
| Smooth Rear Tire | 127-2796 |
| 8-Blade Forward Swept Reel DPA Cutting Unit with 7in Reel | 03639 |
| 11-Blade Forward Swept Reel DPA Cutting Unit with 7in Reel | 03641 |
| Hi-Back Seat Cover | 133-1308 |
| White Universal Sunshade | 30669 |
| Red Universal Sunshade | 30671 |
| Premium All Purpose Grease (Tube) | 108-1190 |
| Premium Engine Oil 10w30 (55 Gallon Drum) | 121-6392 |
| Premium Engine Oil 10w30 (5 Gallon Pail) | 121-6393 |
| Weight Plate | 110-8985-03 |
| 5in Air Cleaner Safety Element | 114-4057 |
| MVP Kit 1000 Hour | 44959 |
| Cutting Unit Hydraulic Hose Kit | 119-6955 |
| Wheel Weight Kit | 104-1478 |
| 2 Post ROPS Extension Kit | 03611 |
| Rear Lift Cylinder Limit Kit | 110-9604 |
| EU Light Kit | 31579 |
| Decal-Service, Japanese | 125-8798 |
| Smooth Front Tire | 133-2940 |
| Pin and Lanyard Asm | 136-8045 |
| Operator Golf Ball Guard, Reelmaster 3100/3500/5010 or Groundsmaster 3500/4300 Series Traction Unit | 03614 |
| 7-in, 11 Blade ES (RR) DPA Cutting Unit | 03643 |
| Spark Arrestor | 98-9099 |
| Semi-Gloss Black Spray Paint | 361-9 |
| Dark Metallic Gray Aerosol Paint | 361-12 |
| New Red Paint - Gallon | 361-11 |
| Air Dry Red Paint - Qt | 5340 |
| Turf Evaluator | 04399 |
| Premium Synthetic Bio-Degradable Hydraulic Fluid (5 Gallon Pail) | 119-2157 |
| Premium Synthetic Bio-Degradable Hydraulic Fluid (55 Gallon Drum) | 119-2158 |
| PX Hydraulic Fluid (5 Gal) | 133-8086 |
| PX Hydraulic Fluid (55 Gal) | 133-8087 |

**Notes:**

**Notes:**

TORO®

Count on it.