1971

TORO

We Take Care™

MODEL NOS. 57111-100001 & UP (RECOIL)
MODEL NOS. 57222-100001 & UP (ELECTRIC)

PARTS CATALOG

7 H.P. LAWN TRACTOR (Recoil & Electric)

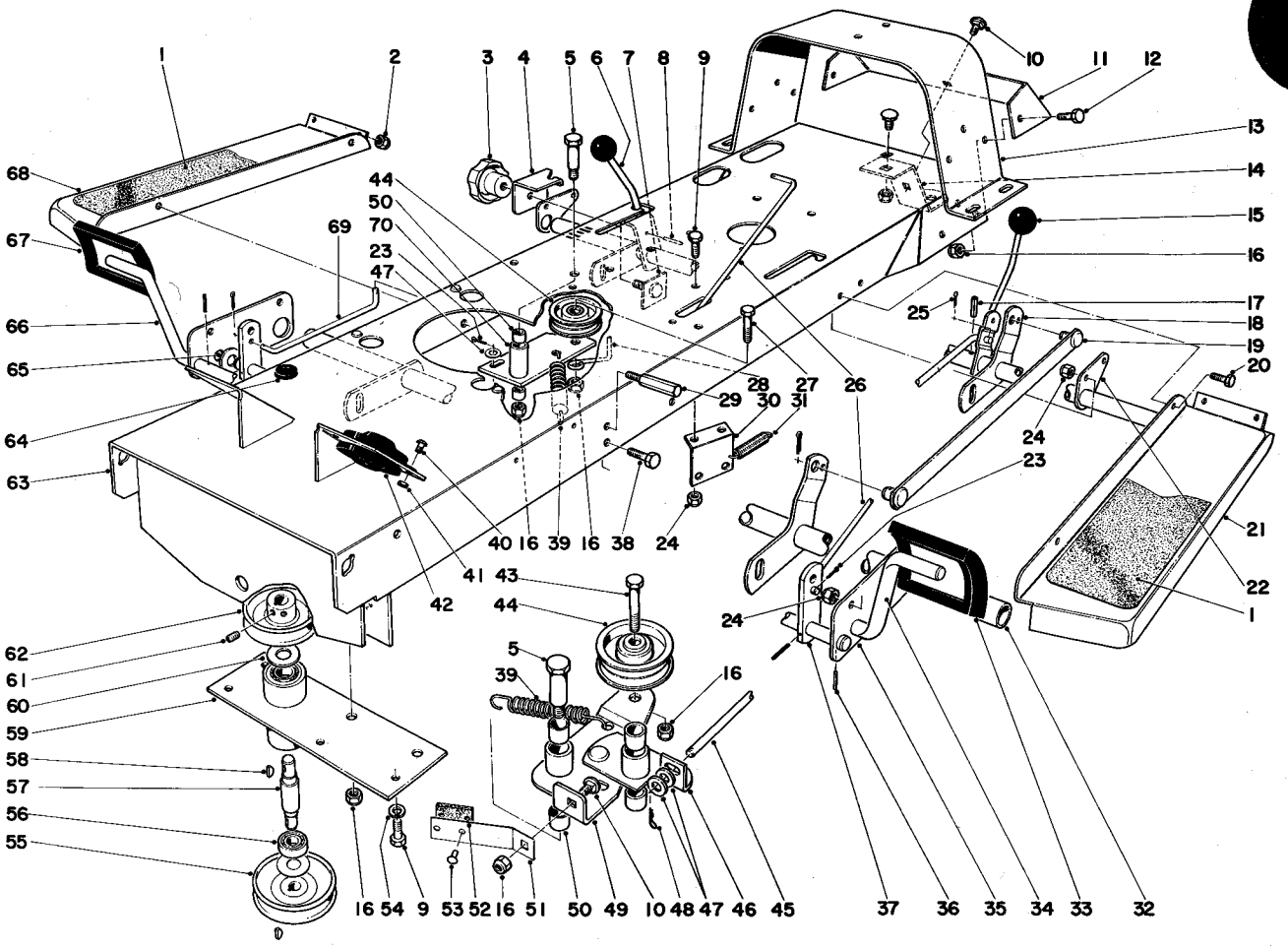

FRAME ASSEMBLY

Ref. No.	Part No.	Description	No. Used
1	7-3894	Foot Pad	2
2	32149-7	Nut	4
3	7-3902	Knob	1
4	7-3772	Slide Height Adjustment	1
5	7-0731	Shoulder Bolt	3
6	7-3763	Rod Control Height Adjustment	1
7	7-3667	Knob Plate	1
8	32121-51	Roll Pin	1
9	322-2	Capscrew	5
10	3231-21	Carriage Bolt	3
11	7-3790	Frame Member Rear	1
12	323-4	Capscrew	2
13	7-3678	Support Rear	1
14	7-3775	Bracket Hitch	1
15	233-22	Knob Control	2
16	32152-2	Locknut	8

Ref. No.	Part No.	Description	No. Used
17	32121-29	Roll Pin	1
18	7-3758	Rear Height Adjustment Tube	1
19	7-3761	Height Adjustment Link	1
20	322-3	Capscrew	4
21	7-3681	Foot Rest	1
22	7-3671	Bracket Tube	2
23	3272-6	Cotter Pin	5
24	32152-1	Locknut	9
25	3272-5	Cotter Pin	1
26	7-6350	Brake Rod	1
27	323-9	Capscrew	1
28	7-0751	Belt Retainer	1
29	7-3668	Pedal Stop	2
30	7-3967	Belt Guide	1
31	7-1322	Spring	1
32	7-3737	Front Height Adjustment Tube	1

Copyright 1970 By
Toro Manufacturing Corporation
Minneapolis, Minnesota 55420 U.S.A.

Price $1.00

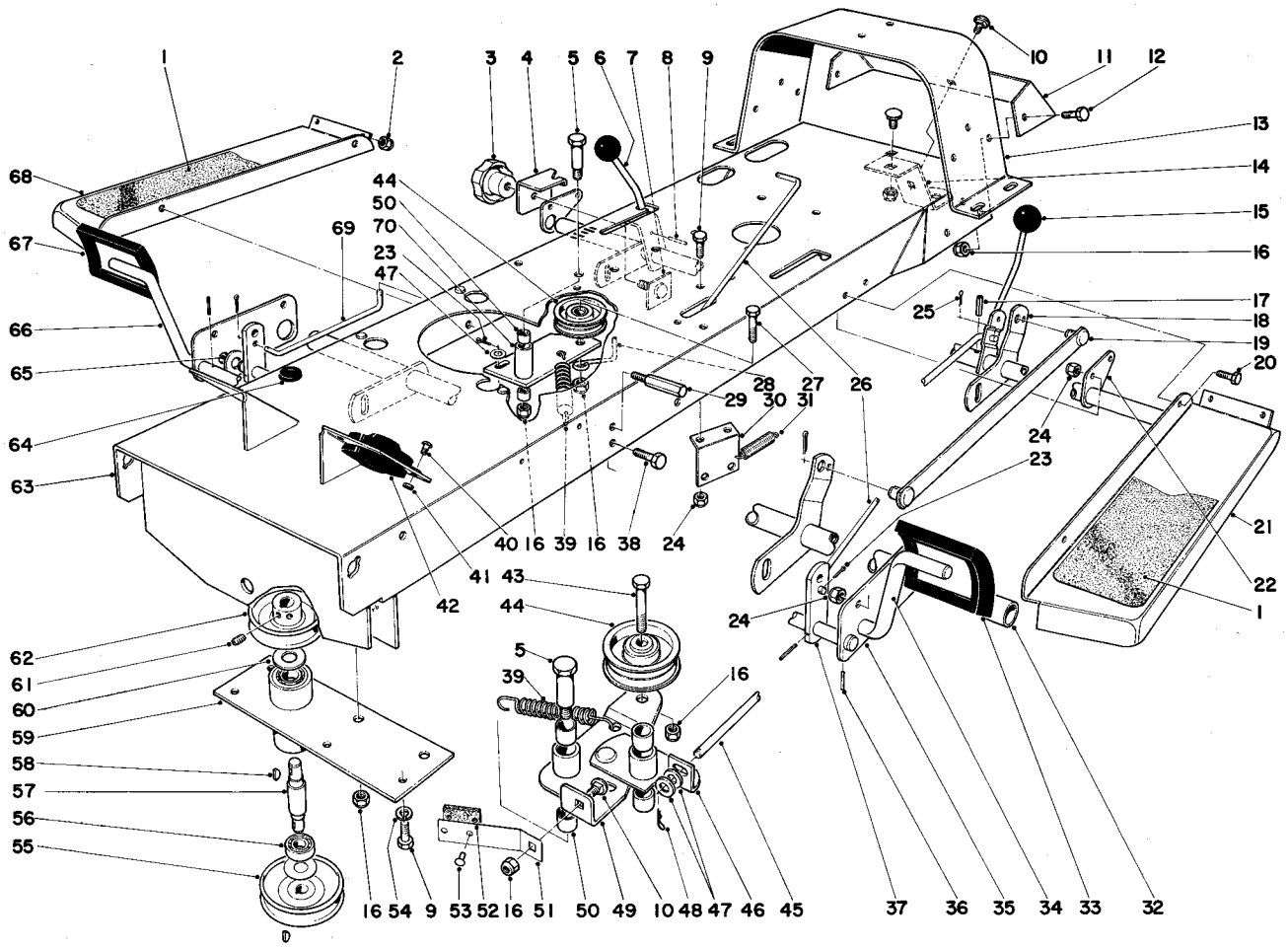

FRAME ASSEMBLY

Ref. No.	Part No.	Description	No. Used
33	7-3901	Foot Pad Clutch	1
34	7-3688	Clutch Pedal	1
35	7-3670	Plate Tube	2
36	32121-45	Roll Pin	6
37	7-3683	Arm Lever	2
38	322-3	Capscrew	2
39	7-3970	Spring	2
40	32122-30	Truss Hd. Screw	4
41	32153-1	Locknut	4
42	7-6990	Rubber Mount	2
43	323-8	Capscrew	1
44	3-4244	Idler Pulley	2
45	7-3885	Rod Blade Clutch	1
46	7-3800	Pivot Bracket, Incl. Ref. No. 50	1
47	3256-2	Washer	3
48	3290-307	Hair Pin Cotter	1
49	7-3751	Idler Plate, Incl. Ref. No. 50	1
50	256-172	Bushing	6
51	7-3801	Spring Clutch	1

Ref. No.	Part No.	Description	No. Used
52	7-0643	Brake Lining	1
53	3295-21	Pop Rivet	2
54	3253-4	Lockwasher	4
55	7-3794	Pulley	1
56	251-5	Bearing	2
57	7-3728	Pulley Shaft	1
58	3257-5	Woodruff Key	2
59	7-3730	Pulley Tube	1
60	7-0777	Bearing Washer	2
61	3246-2	Set Screw	4
62	7-3796	Pulley	1
63	7-7220	Frame	1
64	237-62	Grommet	1
65	3256-27	Washer	1
66	7-3690	Brake Pedal	1
67	7-3900	Foot Pad Brake	1
68	7-3680	Foot Rest R. H.	1
69	7-3741	Rod Clutch	1
70	7-3740	Idler Arm, Incl. Ref. No. 50	1

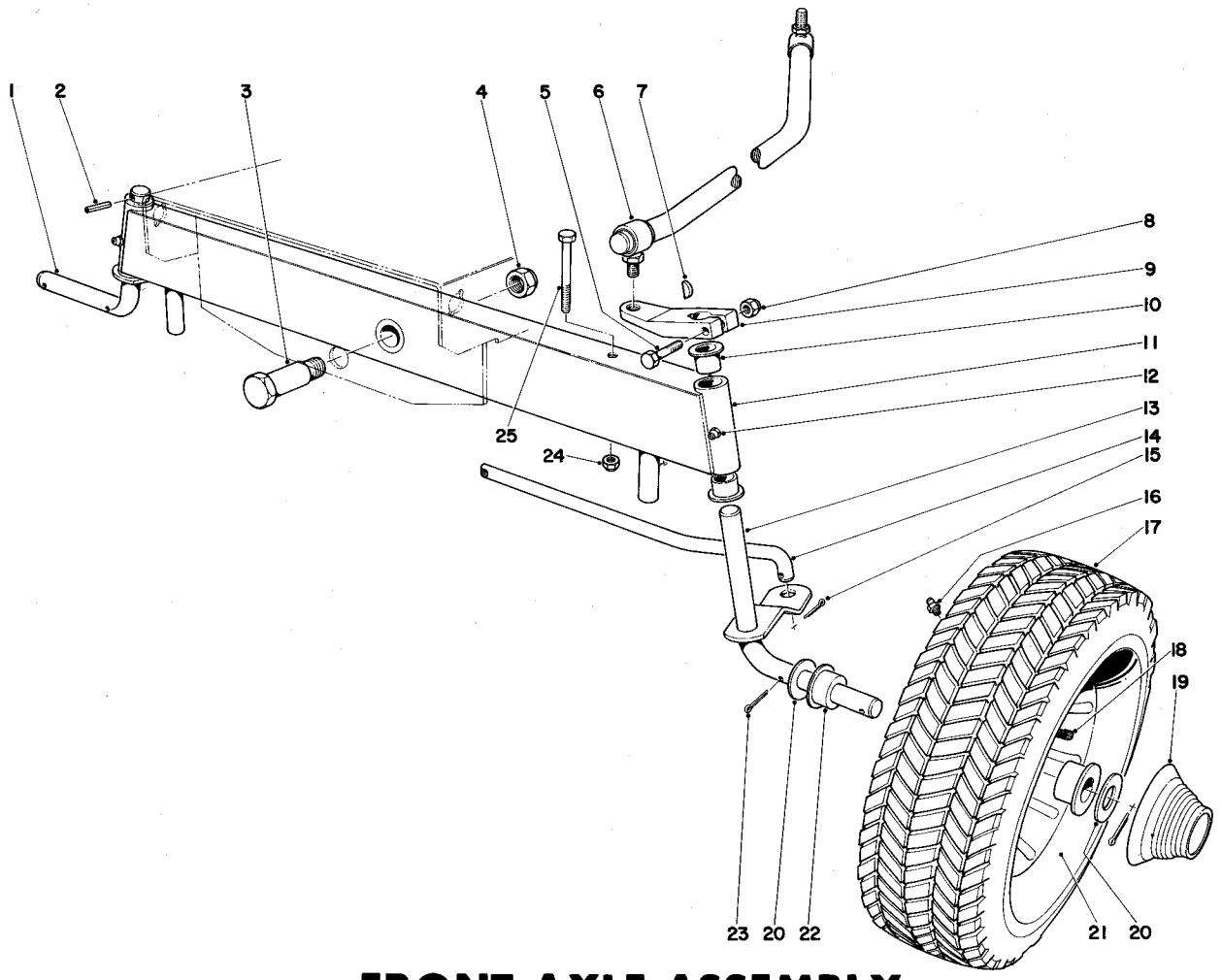

FRONT AXLE ASSEMBLY

Ref. No.	Part No.	Description	No. Used
1	7-3718	Spindle R. H.	1
2	32121-50	Roll Pin	1
3	7-3884	Shoulder Bolt	1
4	32152-3	Locknut	1
5	321-9	Capscrew	1
6	7-4760	Steering Rod	1
7	3257-24	Woodruff Key	1
8	32152-4	Locknut	1
9	7-3706	Steering Arm	1
10	256-90	Bushing	4
11	7-3698	Front Axle, Incl. Ref. No. 10	1
12	302-49	Grease Fitting	2
13	7-3715	Spindle L. H.	1

Ref. No.	Part No.	Description	No. Used
14	7-3776	Tie Rod	1
15	3272-6	Cotter Pin	2
16	302-5	Grease Fitting	2
17	231-55	Tire	2
18	232-27	Valve Stem	2
19	7-3932	Hub Cap	2
20	7-0131	Washer	4
21	217-80	Wheel Rim, Incl. Ref. No. 22	2
22	256-170	Bearing	4
23	3272-12	Cotter Pin	4
24	32152-1	Locknut	1
25	322-2	Capscrew	1

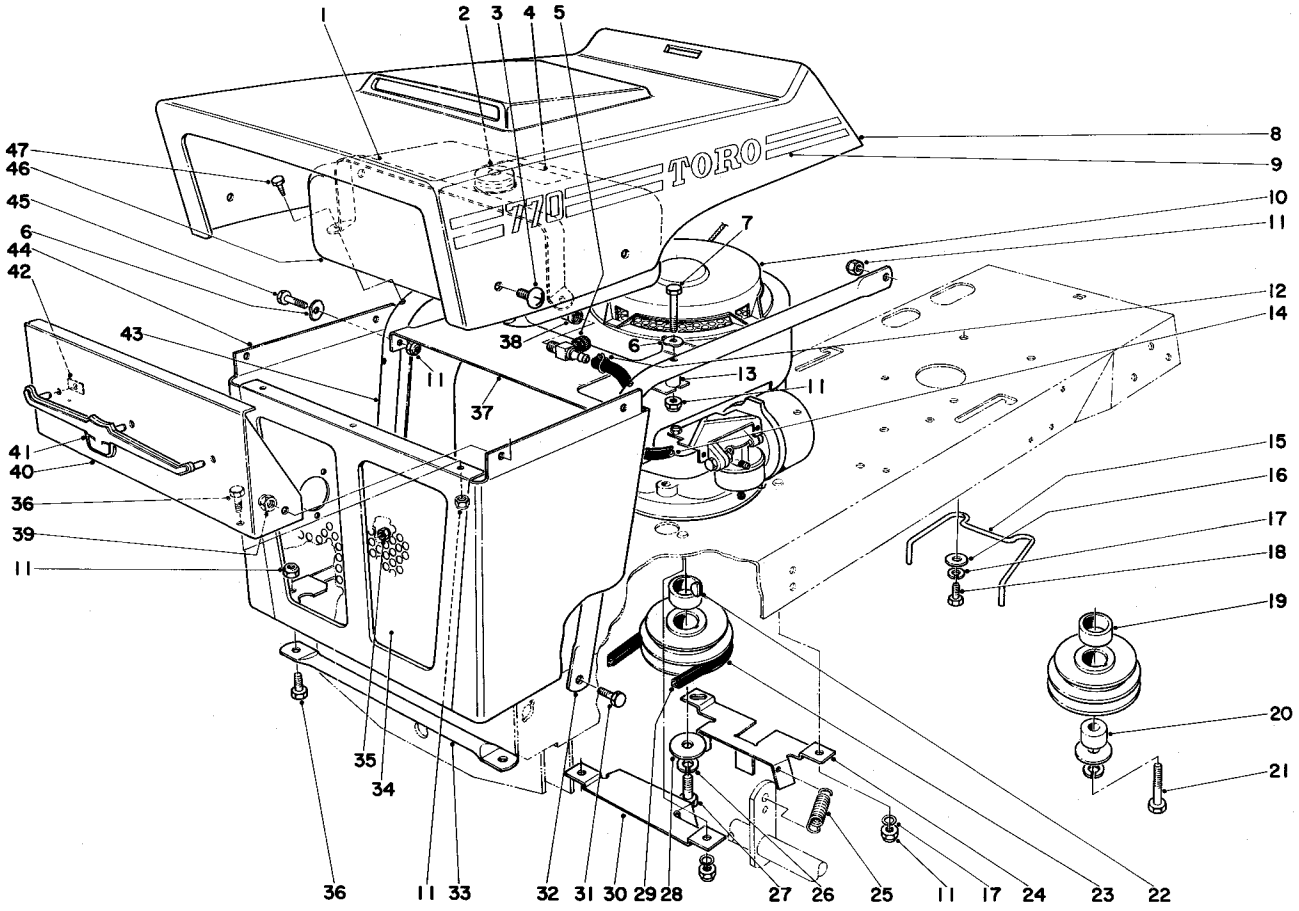

HOOD AND ENGINE ASSEMBLY

Ref. No.	Part No.	Description	No. Used
1	7-7340	Strap Gas Tank	1
2	5-3460	Cap Gas Tank	1
3	3258-158	Cross Recess Screw Truss Hd.	2
4	7-4600	Decal	1
5	7-7260	Shut Off Valve	1
6	3-7501	Washer	6
7	321-9	Capscrew	2
8	7-4980	Hood	1
9	7-8110	Decal Left, Model 57111	1
*	7-8340	Decal Left, Model 57222	1
*	7-8100	Decal Right, Model 57111	1
*	7-8330	Decal Right, Model 57222	1
10	221-374	Engine Model V70-125148	1
*	221-375	Engine Model V70-125149	1
*	221-345	Engine Model V70-125130	1
11	32152-4	Locknut	13
12	2412-6	Hose Clamp	2
13	7-7670	Spacer	2
14	7-3983	Hose	1
15	7-4310	Belt Retainer	1
16	3256-23	Washer	2
17	3253-24	Lockwasher	6
18	322-5	Capscrew	2
19	7-8960	Spacer	1
20	7-8990	Spacer (use with model V70-125130 engine)	1
21	3211-6	Capscrew, (use with model V70-125130 engine)	1

Ref. No.	Part No.	Description	No. Used
22	3253-3	Woodruff Key	1
23	7-3748	Engine Pulley	1
24	7-7360	Belt Guide	1
25	7-3968	Spring Tension	2
26	3253-21	Lockwasher	1
27	3211-2	Capscrew	1
28	3256-36	Washer	1
29	7-3887	Belt	1
30	7-7350	Belt Guide	1
31	322-2	Capscrew	2
32	7-7380	Support Gas Tank, Left	1
33	7-3682	Rod Grille Mount	1
34	7-5040	Grille Panel	1
35	32153-1	Locknut	5
36	321-2	Capscrew	5
37	7-7290	Tray Gas Tank	1
38	7-8180	Elbow	1
39	32152-1	Locknut	2
40	7-8000	Panel Grille	1
41	7-3441	Bullshead Grille	1
42	3290-275	Tinnerman Nut	3
43	7-7390	Support Gas Tank, Right	1
44	7-7050	Grille	1
45	321-8	Capscrew	2
46	7-4920	Gas Tank	1
47	32104-74	Self-Tapping Screw	2

*Not Illustrated

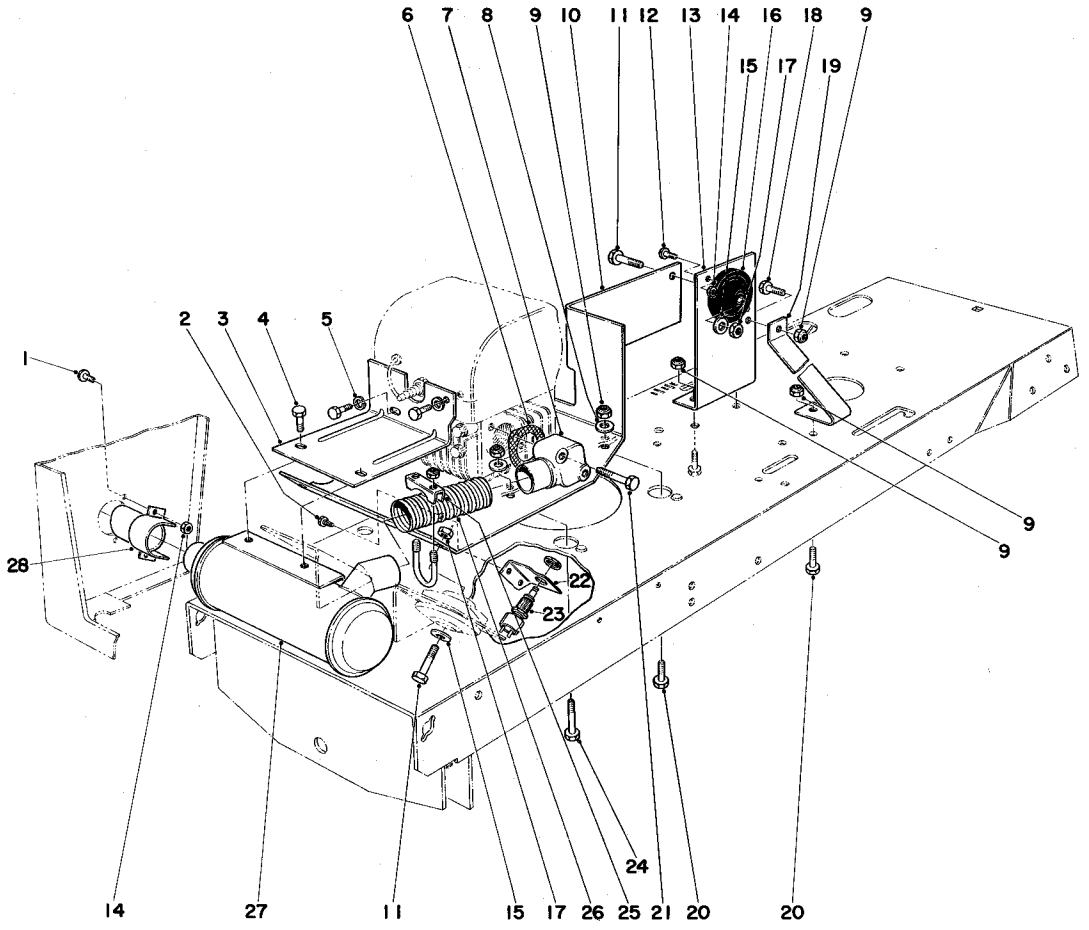

EXHAUST SYSTEM

Ref. No.	Part No.	Description	No. Used
1	3251-2	Round Head Screw	2
2	32104-74	Self-Tapping Screw	2
3	7-7860	Hanger Muffler	1
4	322-1	Capscrew	2
5	3253-24	Lockwasher	2
6	7-8430	Gasket	1
7	7-8770	Elbow Exhaust	1
8	3256-23	Washer	4
9	32152-1	Locknut	8
10	7-7190	Engine Mount	1
11	323-9	Capscrew	3
12	32122-30	Truss Hd. Screw	6
13	7-7320	Mount Rear	1
14	32153-1	Locknut	8
15	3256-24	Washer	3

Ref. No.	Part No.	Description	No. Used
16	7-6990	Mount Rubber	3
17	32153-2	Locknut	3
18	322-2	Capscrew	1
19	7-8440	Brace	1
20	322-3	Capscrew	5
21	3235-5	Capscrew	2
22	7-7040	Switch Mounting Bracket (Model 57222)	1
23	7-5540	Switch (Model 57222)	1
24	322-7	Capscrew	2
25	5-3179	Muffler Clamp	2
26	7-8700	Tubing Exhaust	1
27	7-7170	Muffler	1
28	7-7070	Exhaust Tip	1

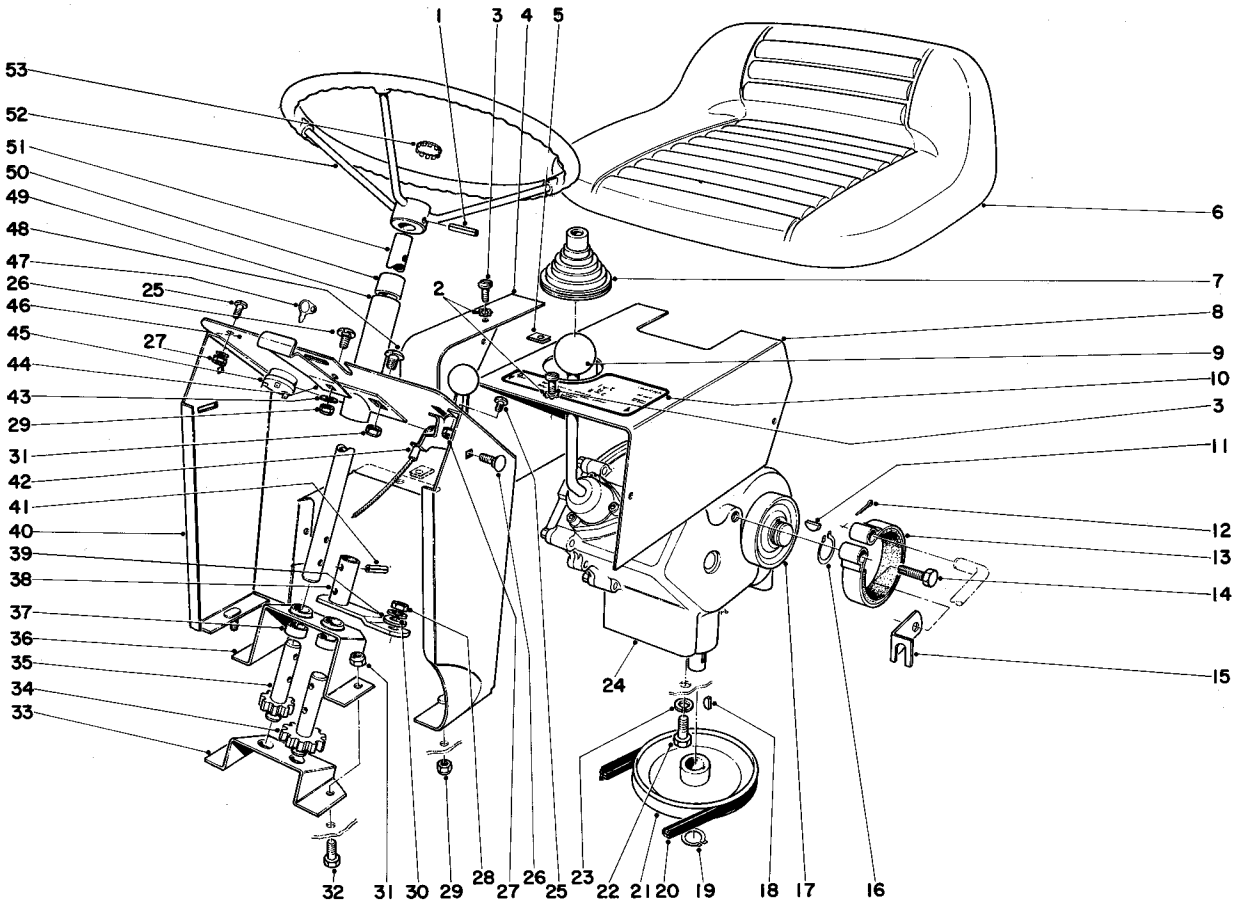

STEERING AND TRANSMISSION ASSEMBLY

Ref. No.	Part No.	Description	No. Used
1	32121-15	Roll Pin	1
2	3255-17	Lockwasher	5
3	3290-111	Pan Hd. Screw	5
4	7-3873	Chain Guard	1
5	3290-191	Clip Tinnerman	5
6	7-7950	Seat	1
7	7-3893	Boot Shift Lever	1
8	7-3784	Cover Transmission	1
9	233-21	Knob Transmission	1
10	7-8130	Decal Model 57111	1
*	7-8140	Decal Model 57222	1
11	3257-5	Key Woodruff	1
12	3272-5	Cotter Pin	1
13	7-6340	Brake Band	1
14	32104-28	Bolt Self-Tapping	1
15	7-6300	Retainer Brake Rod	1
16	32120-72	Retaining Ring	1
17	7-3785	Brake Drum	1
18	3257-32	Key Woodruff	1
19	32120-64	Retaining Ring	1
20	7-3890	Belt	1
21	7-4085	Pulley	1
22	322-2	Capscrew	2
23	3253-24	Lockwasher	2

Ref. No.	Part No.	Description	No. Used
24	7-3708	Transmission	1
25	3251-2	Rd. Hd. Screw	6
26	3229-22	Carriage Bolt	3
27	32149-7	Nut	6
28	3219-3	Nut	1
29	32152-4	Locknut	3
30	3253-21	Lockwasher	1
31	32152-1	Locknut	3
32	322-3	Capscrew	2
33	7-3710	Bracket Steering	1
34	7-3733	Steering Gear	1
35	7-3734	Pinion Gear	1
36	7-3711	Support Steering	1
37	7-3747	Spacer	2
38	7-3883	Steering Arm	1
39	3256-4	Washer	1
40	7-4940	Rear Hood Support Model 57111	1
*	7-4810	Rear Hood Support Model 57222	1
41	32121-4	Roll Pin	2
42	7-4100	Throttle Control	1
43	3256-22	Washer	1
44	7-5080	Hood Latch	1

*Not Illustrated

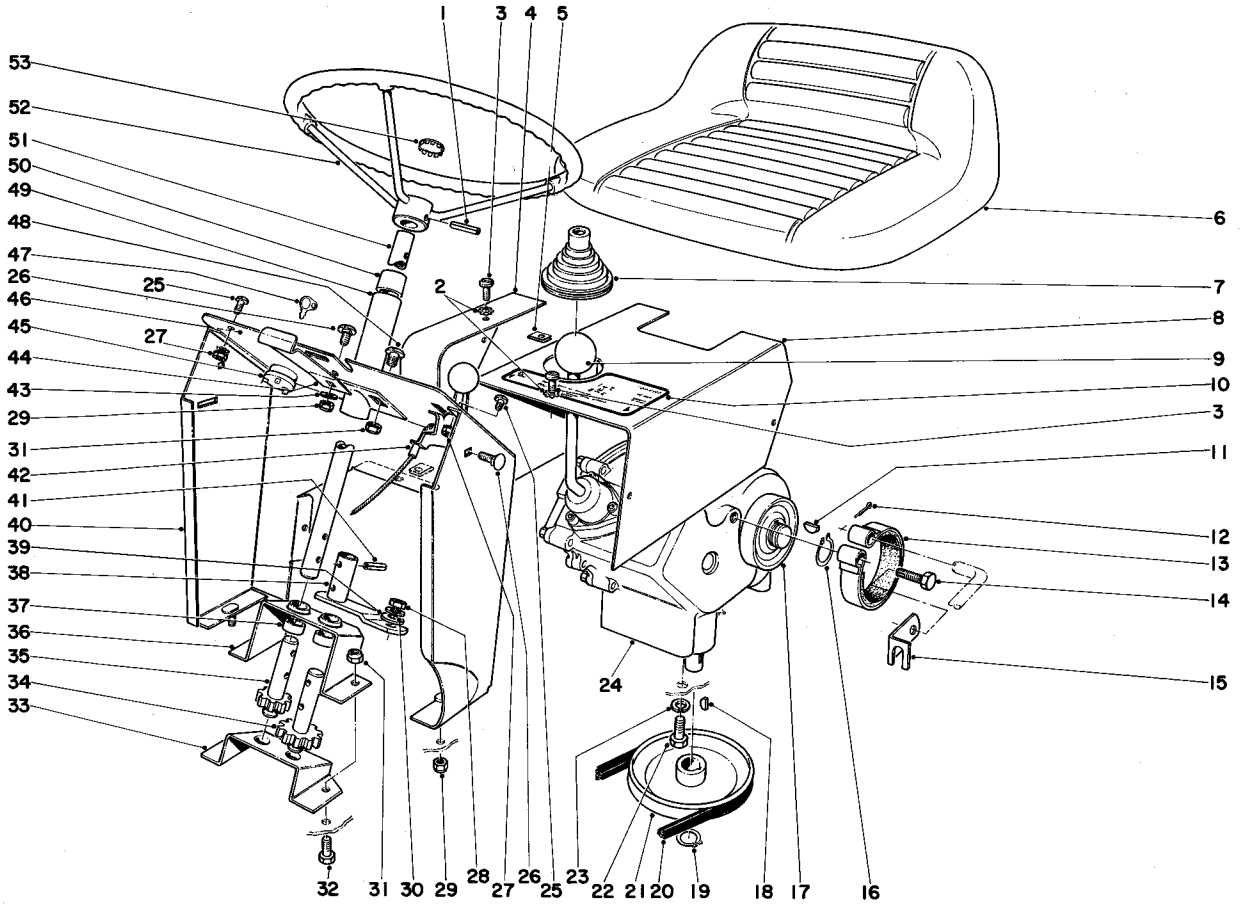

STEERING AND TRANSMISSION ASSEMBLY

Ref. No.	Part No.	Description	No. Used
45	7-5240	Starter Switch Model 57222	1
46	7-8420	Decal Dash Model 57111	1
*	7-8410	Decal Dash Model 57222	1
47	218-412	Ignition Key Model 57222	1
48	3258-158	Cross Recess Truss Hd. Screw	2

Ref. No.	Part No.	Description	No. Used
49	7-3725	Steering Tube Incl. Ref. No. 50	1
50	256-167	Bushing	1
51	7-3723	Steering Shaft	1
52	7-3722	Steering Wheel	1
53	7-3892	Plug Button	1

*Not Illustrated

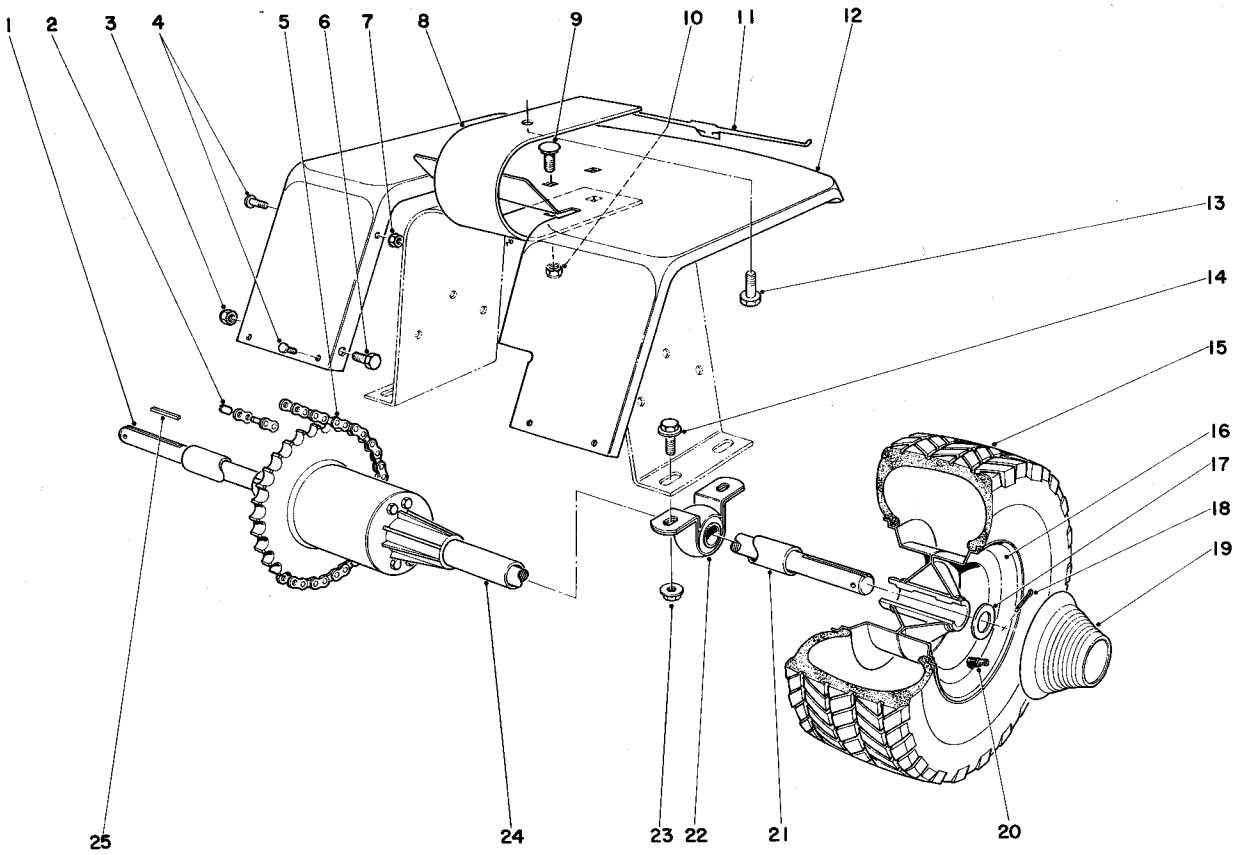

REAR AXLE ASSEMBLY

Ref. No.	Part No.	Description	No. Used
1	7-8620	Differential Model #136	1
2	2710-6	Connecting Link	1
3	32152-1	Locknut	2
4	3290-111	Machine Screw	6
5	7-3786	Roller Chain	1
6	322-3	Capscrew	2
7	32149-7	Nut	2
8	7-8650	Seat Spring	1
9	3231-2	Carriage Bolt	2
10	32152-2	Locknut	2
11	7-8050	Decal	1
12	7-3745	Fender	1
13	3235-4	Capscrew	1

Ref. No.	Part No.	Description	No. Used
14	3234-1	Flanged Capscrew	4
15	231-56	Tire	2
16	217-98	Wheel Rim	2
17	7-4115	Washer	2
18	3272-22	Cotter Pin	2
19	7-4116	Hub Cap Rear	2
20	232-27	Valve Stem	2
21	7-8640	Tube Rear Axle	2
22	7-3770	Pillow Block	2
23	32128-19	Locknut	4
24	7-3877	Tube Rear Axle	1
25	5-1865	Key	2

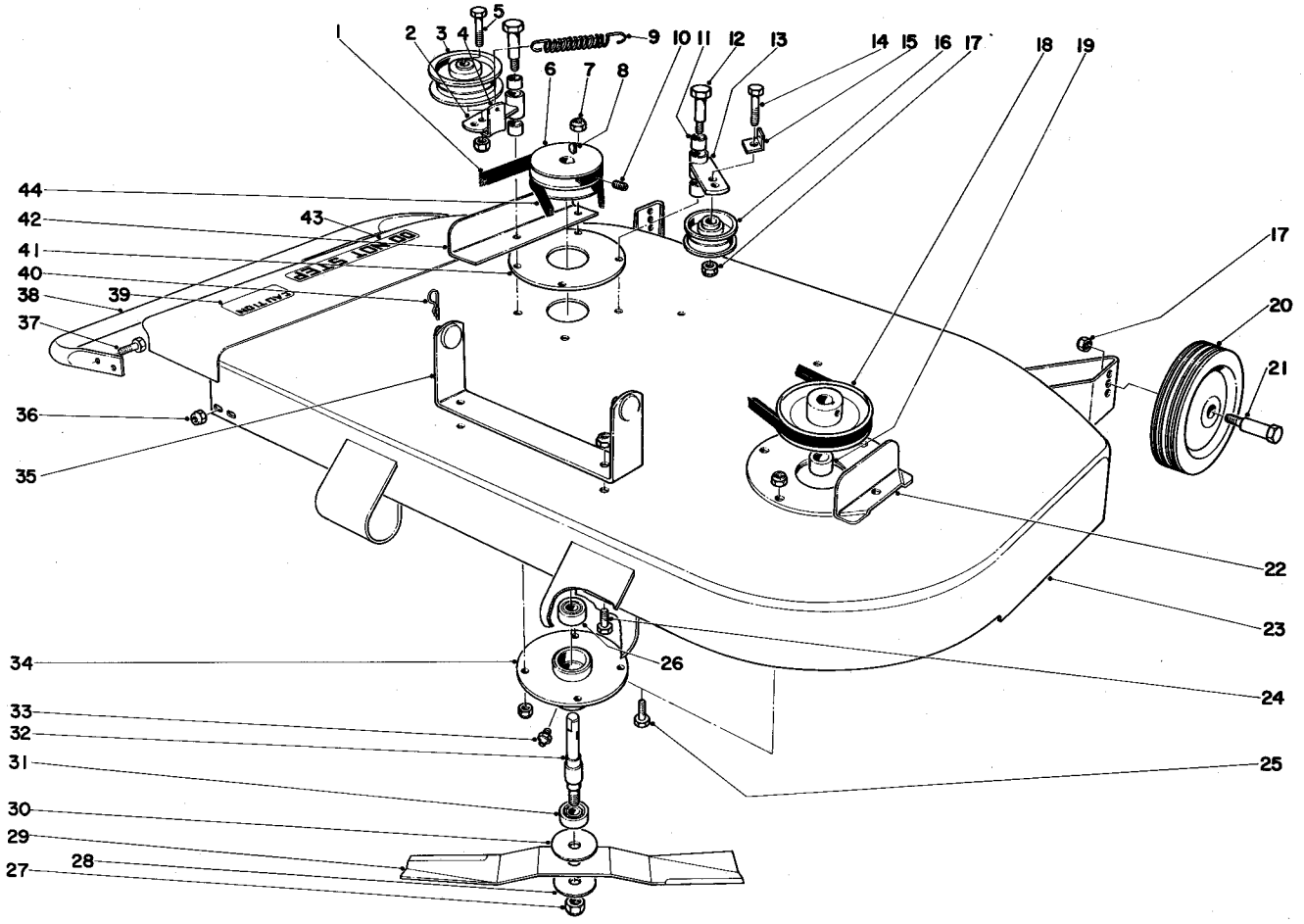

32" MOWER ASSEMBLY

Ref. No.	Part No.	Description	No. Used
1	7-3975	Belt	1
2	7-3780	Idler Plate, Incl. Ref. No. 11	1
3	7-8680	Pulley Idler	1
4	7-8670	Retainer Belt	1
5	323-9	Capscrew	1
6	7-3788	Pulley Blade Spindle	1
7	32152-1	Locknut	12
8	3257-5	Woodruff Key	2
9	7-3977	Spring Tension	1
10	3246-2	Set Screw	4
11	256-172	Bushing	4
12	7-3878	Shoulder Bolt	2
13	7-3781	Idler Plate, Incl. Ref. No. 11	1
14	323-8	Capscrew	2
15	7-3976	Bracket Spring	1
16	3-4244	Pulley Idler	1
17	32152-2	Locknut	4
18	7-3796	Pulley	1
19	7-3747	Spacer Blade Spindle	1
20	241-87	Wheel	2
21	7-0262	Wheel Axle	2
22	7-3994	Belt Guard	1

Ref. No.	Part No.	Description	No. Used
23	7-7250	Housing	1
24	322-3	Capscrew	4
25	322-4	Capscrew	6
26	251-5	Bearing	2
27	32152-6	Locknut	2
28	7-0253	Washer	2
29	7-6860	Blade	2
30	7-3590	Washer	2
31	251-123	Bearing	2
32	7-3791	Blade Spindle	2
33	302-5	Grease Fitting	2
34	7-0963	Spindle Housing	2
35	7-3783	Height Adjustment Bracket	2
36	32152-4	Locknut	4
37	321-3	Capscrew	4
38	7-3864	Blade Guard	1
39	7-6630	Decal Caution	1
40	3290-250	Hair Pin Cotter	4
41	7-0252	Washer	2
42	7-3782	Guard	1
43	7-8200	Decal	1
44	7-6740	Belt	1

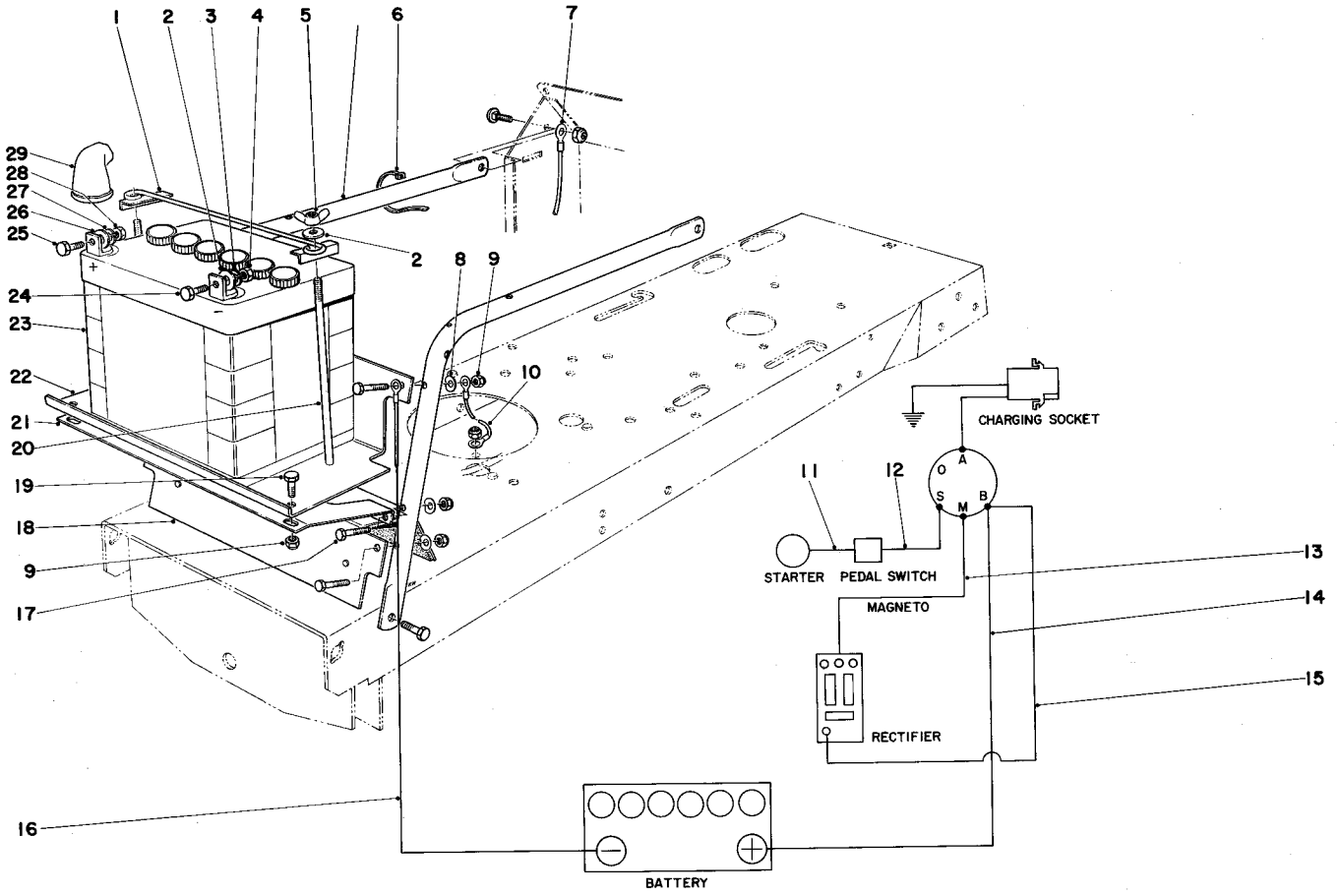

ELECTRICAL DIAGRAM

Ref. No.	Part No.	Description	No. Used
1	7-5000	Battery Clamp	1
2	3256-22	Washer	3
3	3253-3	Lockwasher	1
4	3217-5	Nut	1
5	32103-19	Wing Nut	2
6	7-3123	Cable Tie	2
7	7-5230	Wire Assembly	1
8	3-7501	Washer	6
9	32152-4	Locknut	8
10	7-7630	Wire - Engine to Ground	1
11	7-4081	Wire - Starter to Pedal Switch	1
12	7-8170	Wire - Starter Switch to Pedal Switch	1
13	7-5220	Wire Switch to Mag.	1
14	7-4082	Wire Switch to Battery	1
15	7-6220	Wire Switch to Battery	1

Ref. No.	Part No.	Description	No. Used
16	7-4080	Wire Battery to Ground	1
17	321-8	Capscrew	6
18	7-8040	Heat Shield Models 57111 & 57222	1
19	321-3	Capscrew	2
20	7-3328	Battery Bolt	2
21	7-7310	Heat Shield	1
22	7-8010	Battery Shelf	1
23	239-15	Battery	1
24	321-4	Capscrew	1
25	322-3	Capscrew	1
26	3256-23	Washer	1
27	3253-24	Lockwasher	1
28	3217-6	Nut	1
29	218-331	Battery Boot	2

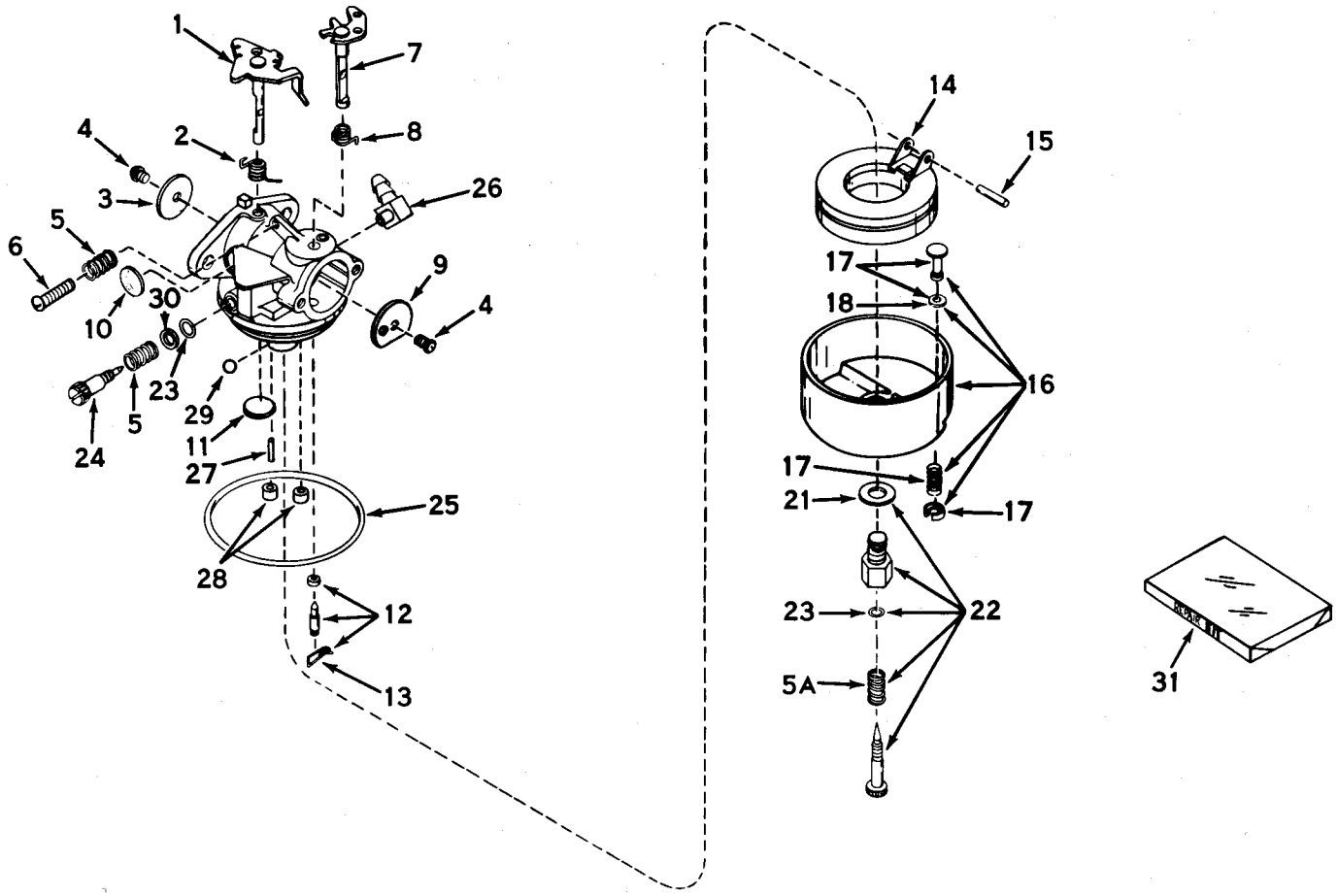

MODEL 631447 CARBURETOR ASSEMBLY

Ref. No.	Part No.	Description	No. Used
1	31834	Shaft & Lever Assy., Throttle	1
2	630731	Spring, Throttle return	1
3	631036	Shutter, Throttle	1
4	650506	Screw, Rd. hd.	2
5	630766	Spring, Idle regulating screw	2
5A	630738	Spring, Main adjustment screw	1
6	650417	Screw, Idle regulating	1
7	630973	Shaft & Lever Assy., Choke	1
8	630821	Spring, Choke return	1
9	631037	Shutter, Choke	1
10	630748	Plug, Welch	1
11	631027	Plug, Welch	1
12	*631021	Inlet Needle, Seat & Clip Assy. (Incl. No. 13)	1
13	631022	Clip, Inlet needle	1
14	631023	Float, Carburetor	1
15	*631024	Shaft, Float	1

Ref. No.	Part No.	Description	No. Used
16	631025	Bowl & Drain Assy., Float (Incl. No. 17)	1
17	27136A	Plunger Assy., Drain (Incl. No. 18)	1
18	27554	Gasket, Drain plunger	1
21	27110	Gasket, Bowl-to-body	1
22	*631026	Adjustment Screw Assy., Main (Incl. Nos. 5A, 21 & 23)	1
23	*630740	"O" Ring, Adjustment screw	2
24	*631078	Screw, Idle adjustment	1
25	*631028	"O" Ring, Bowl-to-body	1
26	631038	Fitting, Fuel inlet	1
27	631039	Pin	1
28	630747	Plug, Cup	2
29	631081	Ball, Aluminum	1
30	630739	Washer, Flat	1
31	631029	Repair Kit (Incl. items marked *)	1

ENGINE TECUMSEH MODEL NOS. V70-125148 (Recoil) AND NOS. V70-125149 (Electric)

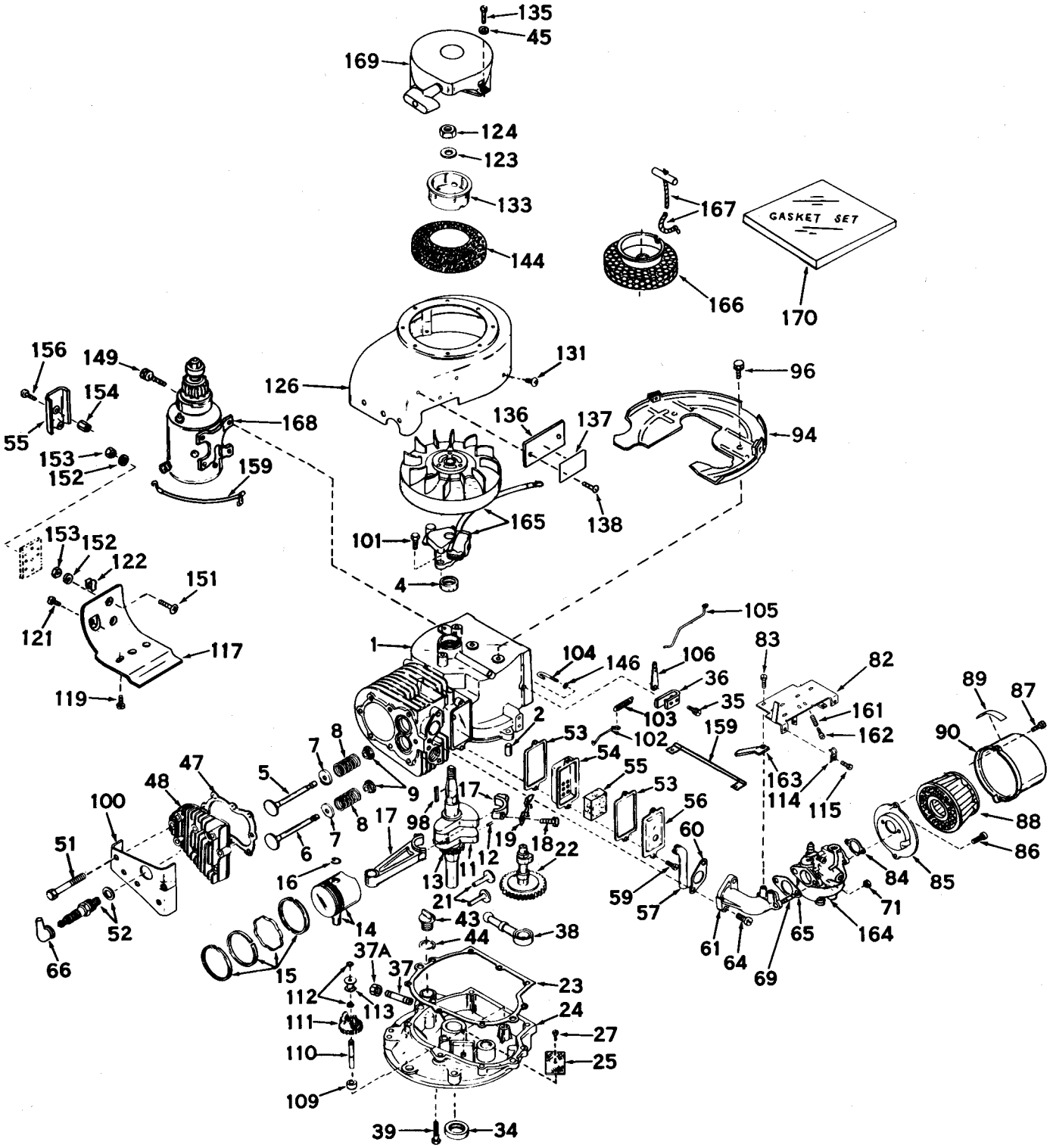

ENGINE TECUMSEH MODEL NOS. V70-125148 (Recoil) AND NOS. V70-125149 (Electric)

Ref. No.	Part No.	Description	No. Used
1	32640	Cylinder Assy. (Incl. Nos. 2 & 4)	1
2	27652	Pin, Dowel	2
4	*32630	Seal, Oil	1
5	32783	Valve, Intake (Std.) (Incl. No. 9)	1
5	32784	Valve, Intake (1/32" oversize) (Incl. No. 9)	1
6	27878A	Valve, Exhaust (Std.) (Incl. No. 9)	1
6	27880A	Valve, Exhaust (1/32" oversize) (Incl. No. 9)	1
7	27882	Cap, Upper valve spring	2
8	27881	Spring, Valve	2
9	32581	Cap, Lower valve spring	2
11	32925	Crankshaft Assy. (Incl. Nos. 12 & 13)	1
12	29783	Pin, Crankshaft gear	1
13	27884	Gear, Crankshaft	1
14	32592	Piston & Pin Assy. (Std.) (Incl. 2 of No. 16)	1
14	32593	Piston & Pin Assy. (.010 oversize) (Incl. 2 of No. 16)	1
14	32594	Piston & Pin Assy. (.020 oversize) (Incl. 2 of No. 16)	1
15	32595	Ring Set, Piston (Std.)	1
15	32596	Ring Set, Piston (.010 oversize)	1
15	32597	Ring Set, Piston (.020 oversize)	1
16	27888	Ring, Piston Pin retaining	2
17	32591A	Rod Assy., Connecting (Incl. Nos. 18 & 19)	1
18	650662	Screw, Connecting rod	2
19	32590	Plate, Lock	1
21	27893	Lifter, Valve	2
22	32114	Camshaft, MCR	1
23	*30684	Gasket Mounting flange	1
24	31471B	Flange Assy., Mounting (Incl. Nos. 25, 27, 34, 37, 43, 44 & 110)	1
25	31355	Screen, Oil filter	1
27	29117	Screw, Slotted hex hd., Self tap	1
34	*27897	Seal, Oil	1
35	650548	Screw, Hex washer head	1
36	31335	Clamp, Governor lever	1
37	30968	Nipple, Pipe	1
37A	30969	Cap, Oil Drain	1
38	31356	Pump Assy., Oil	1
39	650488	Screw, Hex hd. cap, Sems	7
43	27625	Plug, Oil filler	1
44	*29673	Gasket, Filler plug	1
45	650168	Flatwasher (Model V70-125148)	4
47	*32631	Gasket, Cylinder head	1
48	30938A	Head, Cylinder	1
51	650697	Scres, Hex hd. cap	8
52	21943	Plug, Spark (Champion J-8 or equiv.)	1
53	*27896	Gasket, Valve chamber cover	2
54	28423	Body Assy., Breather	1
55	28424	Element, Breather	1
56	28425	Cover, Valve chamber	1
57	27627	Tube, Breather	1
59	650128	Screw, Phil fil. hd. Sems	2

Ref. No.	Part No.	Description	No. Used
60	*27915	Gasket, Intake pipe	1
61	32632	Pipe, Intake	1
64	650378	Screw, Fil. hd. Sems	2
65	*26756	Gasket, Carburetor	1
66	27276	Cover, Spark plug (Model V70-125148)	1
69	32633	Stud	2
71	29752	Nut, Hex, Lock	2
82	32181	Control Assy., Speed	1
83	30200	Screw, Hex hd. Sems	2
84	*27272	Gasket, Air cleaner	1
85	31691	Bracket, Air cleaner	1
86	28820	Screw, Fil. hd. Sems	2
87	650152	Screw, Fil. hd. Sems	2
88	30727	Element, Air cleaner	1
89	31752	Decal, Air cleaner	1
90	31692	Body, Air cleaner	1
94	29536	Baffle, Blower housing	1
96	650561	Screw, Hex hd. cap, Sems	2
98	32589	Key, Flywheel	1
100	30939	Cover, Cylinder head	1
101	650489	Screw, Hex hd. cap, Sems (Model V70-125148)	2
101	650516	Screw, Hex hd. cap, Sems (Model V70-125149)	2
102	32582	Link, Governor spring	1
103	31361	Spring, Governor	1
104	30669	Rod, Governor (Incl. No. 146)	1
105	31823	Link, Throttle	1
106	31357	Lever, Governor	1
109	31707	Spacer	1
110	30668	Shaft, Mechanical governor	1
111	30591	Gear Assy., Governor	1
112	29193	Ring. Retaining	2
113	30588A	Spool, Governor	1
114	27793	Clip, Conduit	1
115	28942	Screw, Hex hd. Sems	1
117	30622	Extension, Blower housing	1
119	650128	Screw, Fil. hd. Sems	1
121	30688	Screw, Hex hd. Sems (Model V70-125148)	1
121	30063	Screw, Fil. hd. Sems (Model V70-125149)	1
122	27275	Clip, Hi-tension wire retaining	2
123	650490	Washer, Belleville	1
124	8116	Nut, Hex 1/2-20	1
126	33211	Housing, Blower (Model V70-125148)	1
126	32222	Housing, Blower (Model V70-125149)	1
131	29747A	Screw, Hex hd. mach., Sems	2
133	32125	Cup, Starter (Model V70-125148)	1
135	30513	Screw, Fil. hd. Sems (Model V70-125148)	4
136	31345	Plate, Identification	1
137	31865	Decal, Name & Identification	1
138	29309	Screw, Drive	2
144	590417	Screen, Starter cup (Model V70-125148)	1
146	28277	Washer Flat	1
149	30688	Screw, Hex hd. Sems (Model V70-125149)	4

ENGINE TECUMSEH MODEL NOS. V70-125148 (Recoil) AND NOS. V70-125149 (Electric)

Ref. No.	Part No.	Description	No. Used
151	28726	Screw, Rd. hd. (Model V70-125149)	2
152	28727	Lockwasher (Model V70-125149)	5
153	28728	Nut (Model V70-125149)	3
154	30065	Nut, Long (Model V70-125149)	1
155	30064	Cover, Panel (Model V70-125149)	1
156	30066	Screw, Phil. hd. (Model V70-125149)	1
159	28468	Wire, Ground (Model V70-125148)	1
159	30831	Wire, Ground (Model V70-125149)	1
161	31342	Spring, Compression	1
162	650549	Screw, Fil. hd. mach.	1
163	32704	Clip	1

Ref. No.	Part No.	Description	No. Used
164	631447	Carburetor	1
165	610689A	Magneto, Tecumseh (Model V70-125148)	1
165	610681A	Magneto, Alternator (Model V70-125149)	1
166	28301	Hub & Screen, Rope Starter (Model V70-125149)	1
167	590343	Rope & Handle, Starter (Model V70-125149)	1
168	**29965	Motor, Starter (Model V70-125149)	1
168	**32468A	Motor, Starter (Model V70-125149)	1
169	590420	Starter, Rewind (Model V70-125148)	1
170	32658A	Gasket Set (Incl. items marked *)	1

**The 29965 and 32468A starter motors used interchangeably. Refer to service number stamped on end cap of motor for identification.

MODEL 590420 REWIND STARTER ASSEMBLY (Recoil)

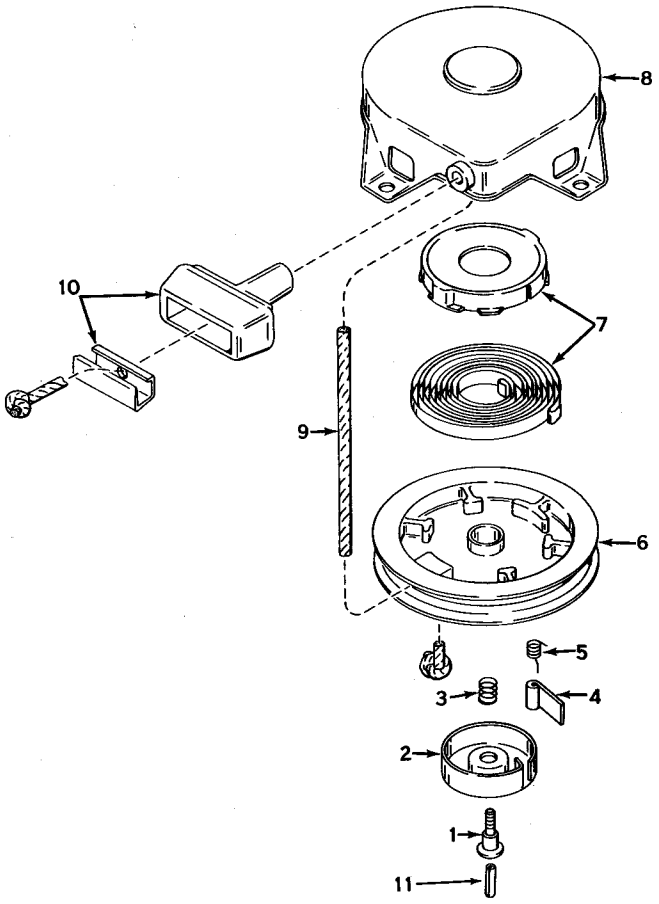

Ref. No.	Part No.	Description	No. Used
1	590409	Screw, Retainer	1
2	590410	Retainer, R. H.	1
3	590411	Spring, Brake	1
4	590148	Dog, Starter	1
5	590412	Spring, R. H. Dog	1
6	590413A	Pulley	1
7	590414	Spring & Keeper Assy.	1
8	590415	Housing Assy., Starter	1
9	590386	Rope, Starter	1
10	590387	Handle Assy., Starter	1
11	590459	Pin, Centering	1

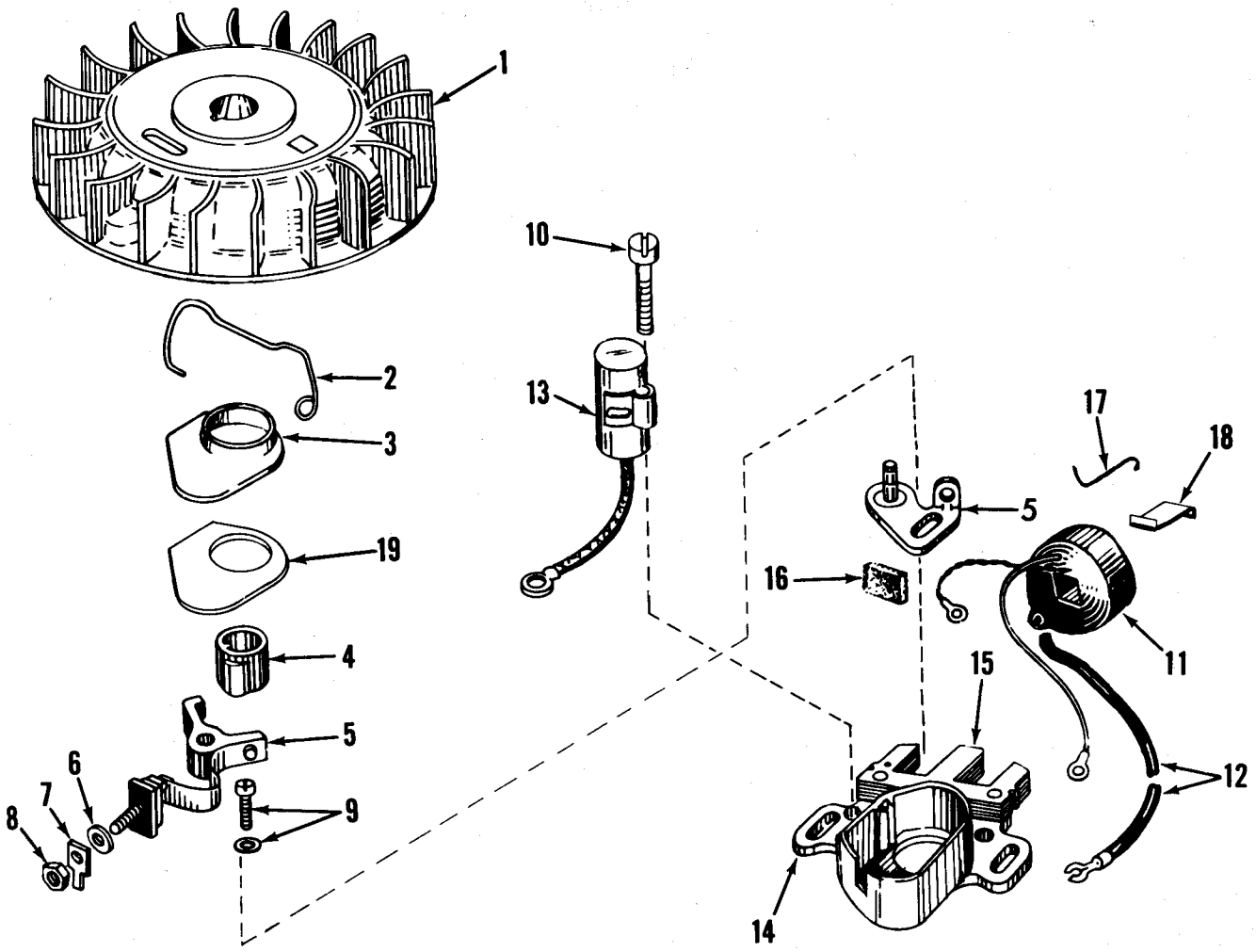

MODEL 610689A MAGNETO ASSEMBLY (Recoil)

Ref. No.	Part No.	Description	No. Used
1	30555	Flywheel	1
2	30551	Spring Breaker Box	1
3	30550	Cover, Breaker Box Dust	1
4	30992	Cam, Breaker (Not used on all engines)	1
5	30547A	Contact Assy., Breaker	1
6	610385	Washer, Terminal	1
7	30843	Tab, Ground Terminal	1
8	610408	Nut, Terminal	1
9	29181	Screw & Washer, Breaker	1
10	610593	Screw, Condenser Fastening	1

Ref. No.	Part No.	Description	No. Used
11	30560	Coil Assy., (Incl. Ref. Nos. 12, 13 & 18)	1
12	30554	Wire, Lead	1
13	30548A	Condenser	1
14	30545	Core & Plate	1
15	30561A	Stator Assy., (Incl. Nos. 2, 3, 5 thru 14 & 16 thru 19)	1
16	30549	Felt, Cam Wiper	1
17	31311	Clip, Coil Locking	1
18	29629	Spring, Coil Wedge	1
19	30883	Gasket, Dust Cover	1

ENGINE TECUMSEH MODEL NO. V70-125130 (ELECTRIC)

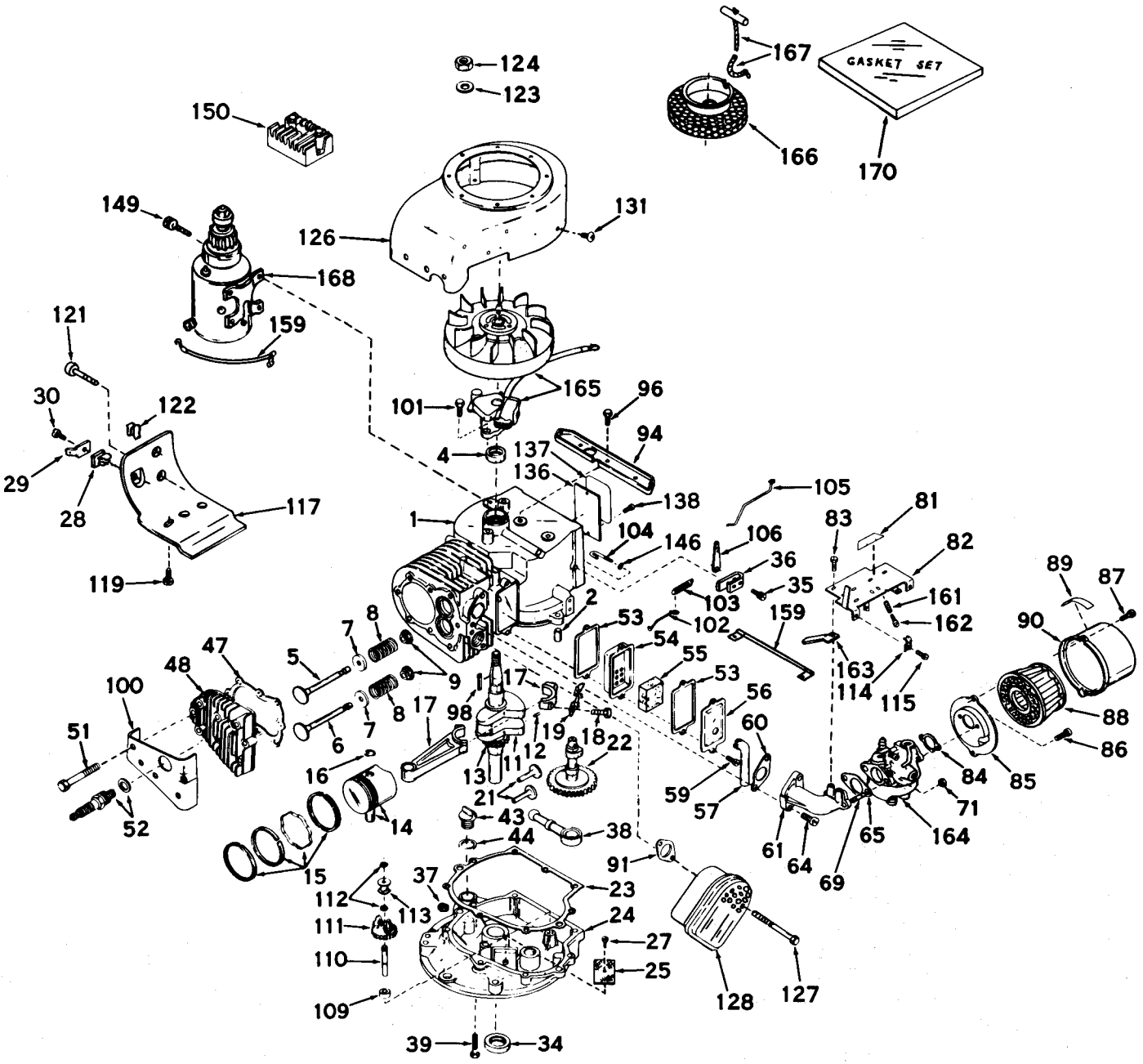

ENGINE V70-125130 (ELECTRIC)

Ref. No.	Part No.	Description	No. Used
1	32640	Cylinder Assy.(Incl. Nos. 2 & 4)	1
2	27652	Pin, Dowel	2
4	*32630	Seal, Oil	1
5	32783	Valve,Intake(Std.)(Incl. No. 9)	1
5	32784	Valve, Intake (1/32" oversize) (Incl. No. 9)	1
6	27878A	Valve, Exhaust (Std.) (Incl. No. 9)	1
6	27880A	Valve, Exhaust (1/32" oversize) (Incl. No. 9)	1
7	27882	Cap. Upper valve spring	2
8	27881	Spring, Valve	2
9	32581	Cap, Lower valve spring	2
11	33029	Crankshaft Assy.(Incl. Nos. 12 & 13)	1
12	29783	Pin, Crankshaft gear	1
13	27884	Gear, Crankshaft	1
14	32592	Piston & Pin Assy. (Incl. 2 of No. 16) (Std.)	1
14	32593	Piston & Pin Assy.(Incl. 2 of No. 16) (.010 oversize)	1
14	32594	Piston & Pin Assy.(Incl. 2 of No. 16) (.020 oversize)	1
15	32595	Ring Set, Piston (Std.)	1
15	32596	Ring Set, Piston (.010 oversize)	1
15	32597	Ring Set, Piston (.020 oversize)	1
16	27888	Ring, Piston pin retaining	2
17	32591	Rod Assy., Connecting (Incl. Nos. 18 & 19)	1
18	650662	Screw, Connecting rod	2
19	32590	Plate, Lock	1
21	27893	Lifter, Valve	2
22	32114	Camshaft	1
23	*30684	Gasket, Mounting flange	1
24	31471B	Flange Assy., Mounting (Incl. Nos. 25, 27, 34, 37, 43, 44 & 110)	1
25	31355	Screen, Oil filter	1
27	29117	Screw, Spotted hex hd.Self tap	1
28	28545	Grommet	1
29	30843	Terminal	1
30	650643	Screw	1
34	*27897	Seal, Oil	1
35	650548	Screw, Hex washer head	1
36	31335	Clamp, Governor lever	1
37	27642	Plug, Oil drain sq. hd.	1
38	31356	Pump Assy., Oil	1
39	650488	Screw, Hex hd. cap, Sems	7
43	27625	Plug, Oil filter	1
44	*29673	Gasket, Filler plug	1
47	*32631	Gasket, Cylinder head	1
48	39038A	Head, Cylinder	1
51	28261	Screw, Hex hd. cap,	8
52	21943	Plug, Spark (Champion)J-8 or equivalent)	1
53	*27896	Gasket, Valve chamber cover	2
54	28423	Body Assy., Breather	1
55	28424	Element, Breather	1
56	28425	Cover, Valve chamber	1
57	27627	Tube, Breather	1
59	650128	Screw, Phil. fil. hd. Sems	2
60	*27915	Gasket, Intake pipe	1
61	32632	Pipe, Intake	1

Ref. No.	Part No.	Description	No. Used
64	650378	Screw, Fil. hd. Sems	2
65	*26756	Gasket, Carburetor	1
69	32633	Stud	2
71	29752	Nut, Hex, lock	2
81	31514	Decal, Speed control	1
82	31736	Control Assy., Speed	1
83	30200	Screw, Hex washer hd.	2
84	*27272	Gasket, Air cleaner	1
85	31691	Bracket, Air cleaner	1
86	28820	Screw, Fil. hd. Sems	2
87	650152	Screw, Fil. hd. Sems	2
88	30727	Element, Air cleaner	1
89	31752	Decal, Air cleaner	1
90	31692	Body, Air cleaner	1
91	*27930	Gasket, Exhaust	1
94	28738	Bracket, Blower housing (Incl. No. 131)	1
96	650561	Screw, Hex hd. cap, Sems	2
98	32589	Key, Flywheel	1
100	30939	Cover, Cylinder head	1
101	650516	Screw, Hex hd. cap, Sems	2
102	32582	Link, Governor spring	1
103	31361	Spring, Governor	1
104	30669	Rod, Governor (Incl. No. 146)	1
105	31823	Link, Throttle	1
106	31357	Lever, Governor	1
109	31707	Spacer	1
110	30668	Shaft, Mechanical governor	1
111	30591	Gear Assy., Governor	1
112	29193	Ring, Retaining	2
113	30588A	Spool, Governor	1
114	27793	Clip, Conduit	1
115	28942	Screw, Hex hd. Sems	1
117	30622	Extension, Blower housing	1
119	650128	Screw, Fil. hd. Sems	1
121	30688	Screw, Hex. hd. Sems	1
122	27275	Clip, Hi-tension wire retaining	2
123	650490	Washer, Belleville	1
124	8116	Nut, Hex	1
126	32296	Housing, Blower	1
127	27931	Screw	2
128	28269	Muffler Assembly	1
131	29747A	Screw, Fil. hd. mach., Sems	2
136	31345	Plate, Identification	1
137	31865	Decal, Name & Instruction	1
138	28670	Screw, Drive	2
146	28277	Washer, Flat	1
149	30688	Screw, Fil. hd. Sems	4
150	610749	Regulator, Rectifier	1
159	30831	Wire, Ground	1
161	31342	Spring, Compression	1
162	650549	Screw, Fil. hd. mach.	1
163	32704	Clip	1
164	631447	Carburetor	1
165	610816	Magneto, Alternator	1
166	28301	Hub & Screen, Rope Starter	1
167	590343	Rope & Handle, Starter	1
168	**29965	Motor, Starter	1
168	**32468A	Motor, Starter	1
170	32658	Gasket Set (Incl. items marked*)	1

**The 29965 and 32468A starter motors used interchangeably. Refer to service number stamped on end cap of motor for identification.

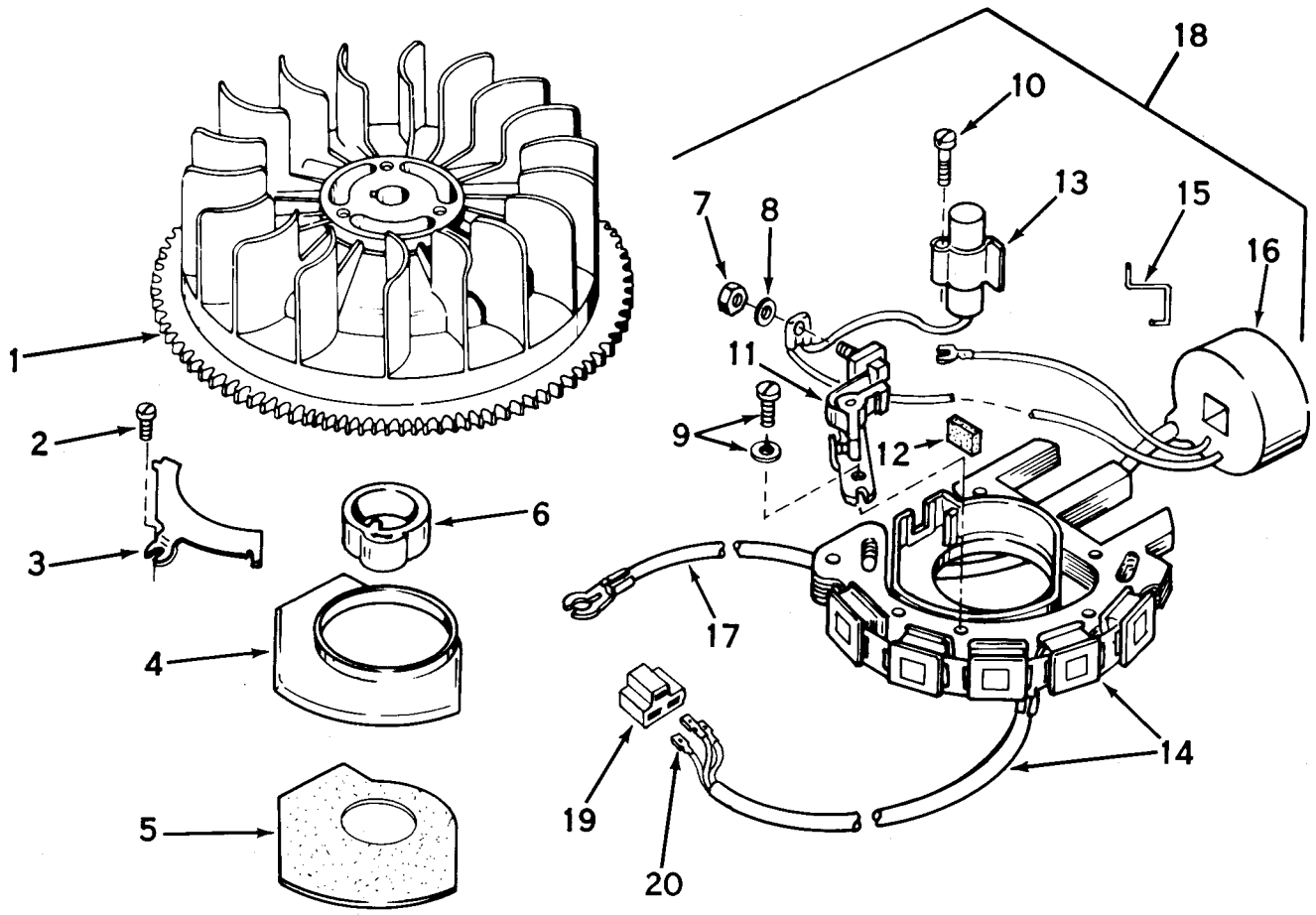

MAGNETO NO. 610816 MODEL NO. V70-125130 (Electric)

Ref. No.	Part No.	Description	No. Used
1	32333	Flywheel	1
2	610762	Screw, Dust Cover	1
3	32435	Clamp, Dust Cover	1
4	32365	Cover, Breaker Assy.	1
5	32993	Gasket, Dust Cover	1
6	32334	Cam, Breaker	1
7	610480	Nut, Terminal	1
8	610385	Washer, Terminal	1
9	29181	Screw & Lockwasher	1
10	610593	Screw, Condenser Fastening	1
11	32434	Contact Assy., Breaker	1

Ref. No.	Part No.	Description	No. Used
12	30549	Felt, Cam Wiper	1
13	610767	Condenser	1
14	610818	Stator Core & Generating Coils (Incl. Nos. 19 & 20)	1
15	31311	Clip, Coils	1
16	610768	Coil	1
17	30554	Wire, Lead	1
18	610817	Stator Plate Assy. (Incl. Nos. 2 thru 5, 7 thru 17, 19 & 20)	1
19	610819	Connector, Pyramid	1
20	610820	Terminal	1

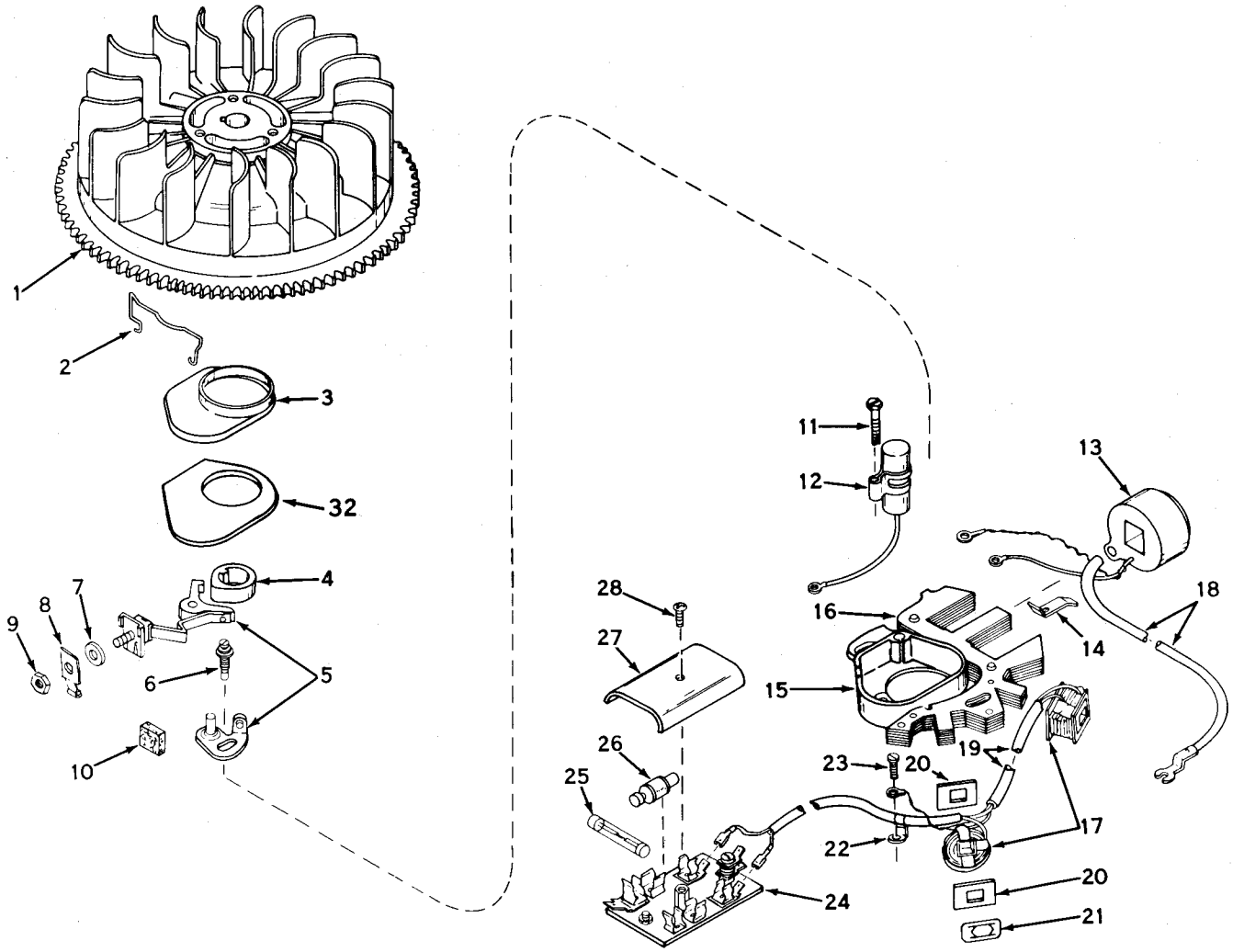

MODEL 610681A MAGNETO ASSEMBLY (Electric)

Ref. No.	Part No.	Description	No. Used
1	30755	Flywheel	1
2	30836	Spring, Dust Cover	1
3	30550	Cover, Breaker Box Dust	1
4	30992	Cam, Breaker	1
5	30547A	Contact Assy., Breaker	1
6	29181	Screw & Lockwasher	1
7	610385	Washer, Terminal	1
8	30843	Tab, Terminal	1
9	610408	Nut, Terminal	1
10	30549	Felt, Cam Wiper	1
11	610593	Screw, Condenser Fastening	1
12	30548A	Condenser	1
13	30560	Coil Assy. (Incl. Nos. 12, 14 & 18)	1
14	29629	Spring, Coil Wedge	1
15	30833A	Stator Plate Assy. (Incl. Nos. 2, 3, & 5 thru 28 & 32)	1

Ref. No.	Part No.	Description	No. Used
16	30834	Core & Plate	1
17	30835	Generator Coils & Leads	1
18	30554	Wire, Lead	1
19	30840	Sleeve, Insulation	1
20	30838	Shield, Coil	2
21	30839	Clip, Coil Fastening	2
22	30837	Clip, Ground	1
23	610288	Screw, Ground	1
24	30841	Plate, Rectifier (Does not incl. 25 & 26)	1
25	29561	Fuse (6 amp)	1
26	30842	Rectifier	2
27	30064	Cover, Panel	1
28	30066	Screw, Rd. Hd. mach.	1
32	30883	Gasket, Dust cover	1

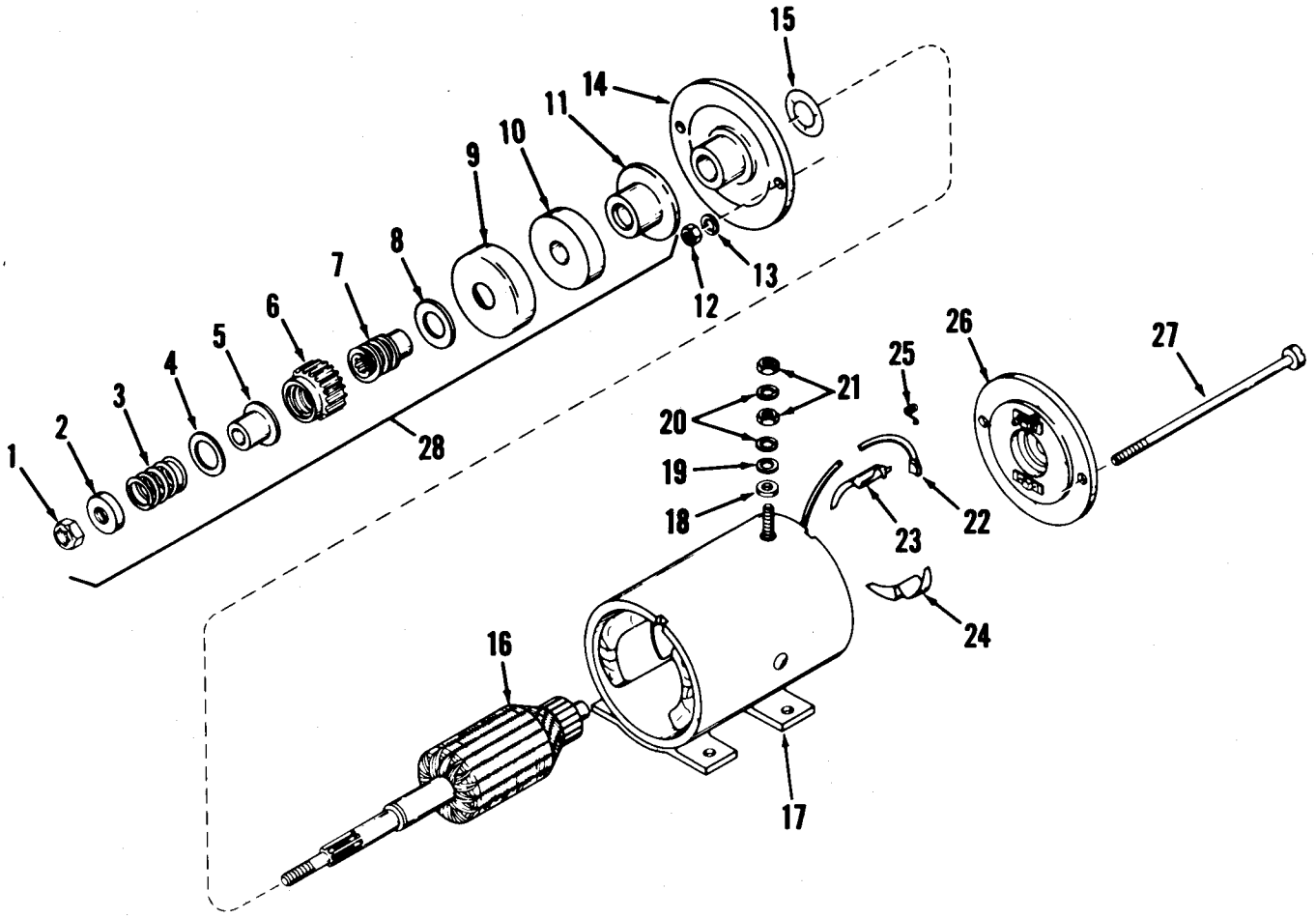

MODEL 29965 STARTER MOTOR ASSEMBLY (Electric)

Ref. No.	Part No.	Description	No. Used
1	30004	Nut, Elastic stop	1
2	28692	Stop, Pinion	1
3	28693	Spring, Anti-drift	1
4	28694	Washer, Pinion	1
5	28695	Sleeve, Anti-drift	1
6	30005	Gear, Pinion	1
7	30006	Shaft, Screw	1
8	30007	Washer, Thrust	1
9	30008	Cup, Cushion	1
10	30009	Cushion, Rubber	1
11	30010	Washer, Thrust	1
12	30011	Nut, Securing	2
13	30012	Washer, Lock	2
14	31590	Cap Assy., Drive end (Incl. bearing)	1
15	30014	Washer, Spacing (.010 thick) (Use as required)	1
15	30015	Washer, Spacing (.020 thick) (Use as required)	1

Ref. No.	Part No.	Description	No. Used
16	30016	Armature	1
17	30017	Housing Assy., (Incl. pole shoes, field coils, terminal post, straight mounting bracket, Nos. 18 thru 21, 23, 24, and 1 of 22)	1
18	28707	Washer, Insulating	1
19	28708	Washer, Plain	1
20	28709	Washer, Lock	2
21	28710	Nut, Hex	2
22	30018A	Brush & Spring Kit (Incl.No. 25)	2
23	30019	Insulation	2
24	30020	Insulation	2
25	30021	Spring, Brush	2
26	30022	End Cap Assy., Commutator (Incl. Nos. 25 and 1 of 22)	1
27	30023	Bolt, Thru	2
28	30003	Drive Assy., Complete (Incl. Nos. 1 thru 11)	1

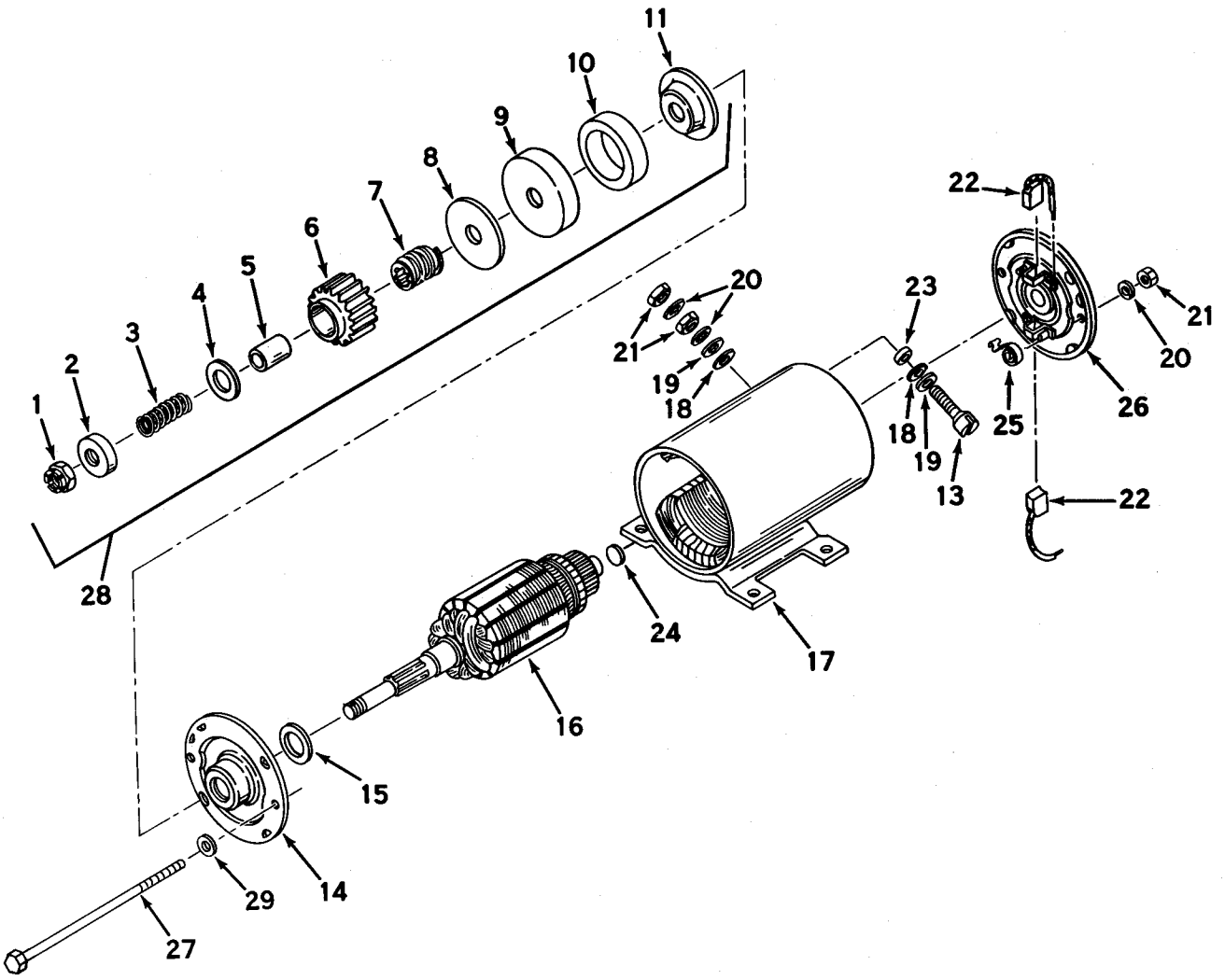

MODEL 32468A STARTER MOTOR ASSEMBLY (Electric)

Ref. No.	Part No.	Description	No. Used
1	32483	Nut, Hex	1
2	32484	Stop, Pinion	1
3	32485	Spring, Anti-drift	1
4	32486	Washer, Pinion	1
5	32487	Sleeve, Anti-drift	1
6	32488	Gear, Pinion	1
7	32489	Shaft, Screw	1
8	32490	Washer, Thrust	1
9	32491	Cup, Cushion	1
10	32492	Cushion, Rubber	1
11	32493	Washer, Thrust	1
13	32499	Bolt, Terminal	1
14	32494	Cap Assy., Drive end (Incl. bearing)	1
15	32495	Washer, Spacing (.024 thick)	2
15	32496	Washer, Spacing (.008 thick)	2
16	32497	Armature	1

Ref. No.	Part No.	Description	No. Used
17	32843	Housing Assy. (Incl. pole shoes, field coils, terminal post, straight mounting bracket, Nos. 18 thru 21)	1
18	32500	Washer, Insulating	2
19	650168	Washer, Plain	1
20	650131	Washer, Lock	4
21	28710	Nut, Hex	4
22	32838	Brush & Spring Kit	1
23	32501	Bushing, Insulating	1
24	32509	Washer, Spacing	1
25	32837	Spring, Brush	2
26	32842	End Cap Assy., Commutator	1
27	32508	Bolt, Thru	2
28	32481	Drive Assy., Complete (Incl. Nos. 1 thru 11)	1
29	31481	Washer	2

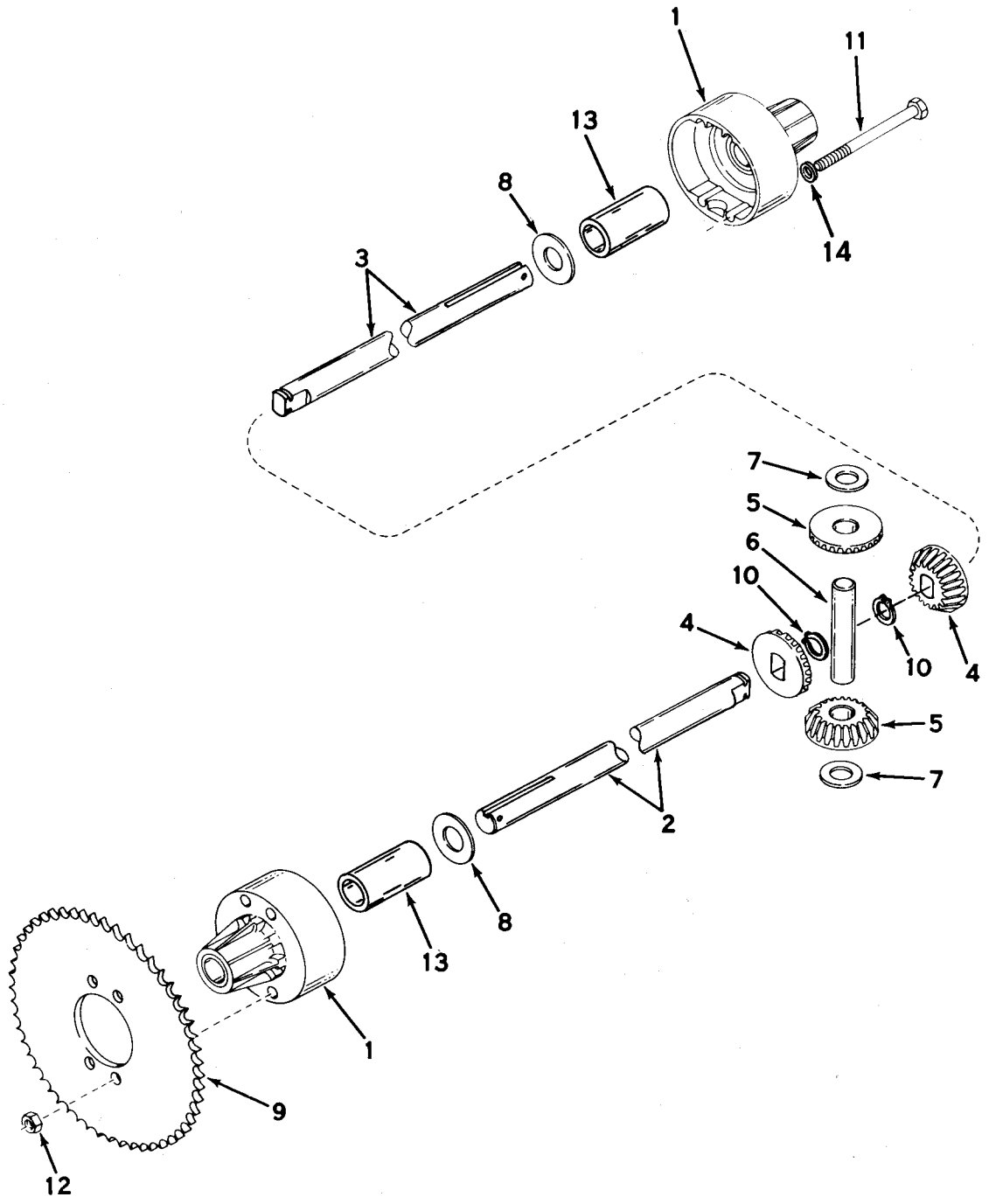

DIFFERENTIAL MODEL 136 TECUMSEH

Ref. No.	Part No.	Description	No. Used
1	774073	Housing, Differential carrier (Incl. No. 13)	2
2	774214	Axle (10-29/64" Long)	1
3	774215	Axle (15-21/46" Long)	1
4	778067	Gear, Bevel	2
5	778068	Gear, Pinion	2
6	786040	Pin, Drive	1
7	780096	Washer, Thrust	2

Ref. No.	Part No.	Description	No. Used
8	780001	Washer	2
9	786042	Sprocket (40 tooth)	1
10	788038	Ring, Snap	2
11	792041	Screw, Hex hd.	4
12	792042	Nut, Lock	4
13	780077	Bushing	2
14	792061	Washer	4

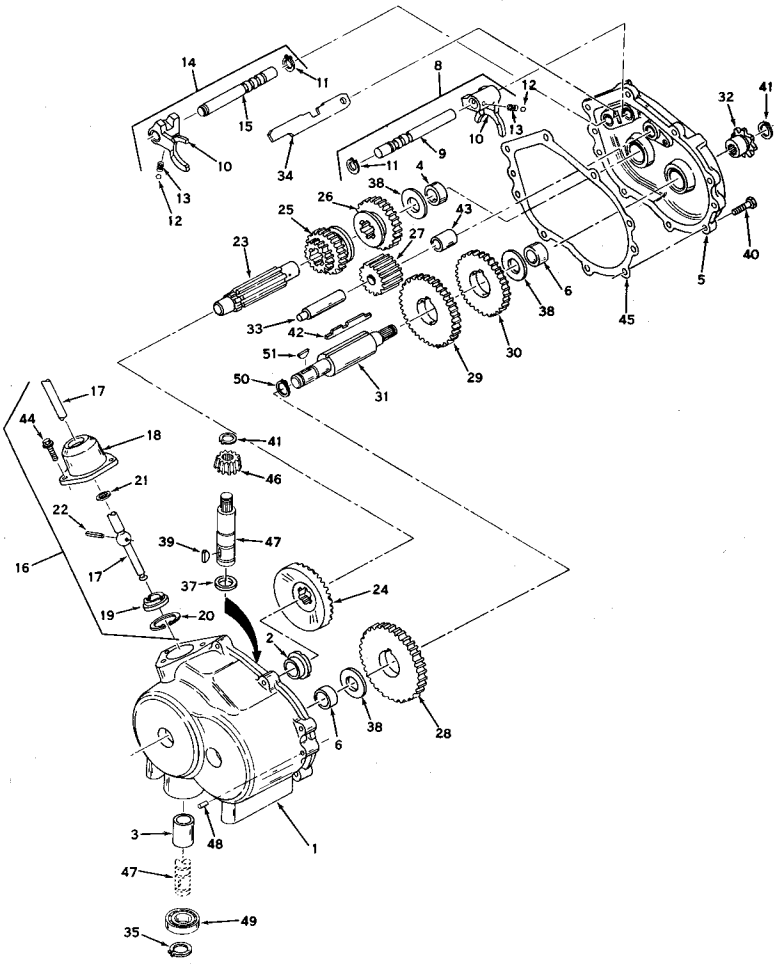

MODEL 352 TRANSMISSION TECUMSEH

Ref. No.	Part No.	Description	No. Used
1	770048	Case Assy., Transmission (Incl. Nos. 2, 3 & 6)	1
2	780079	Bearing, Bronze	1
3	780087	Bearing, Bronze	1
4	780080	Bearing, Bronze	1
5	772060	Cover Assy., Transmission (Incl. Nos. 4 & 6)	1
6	780081	Bushing, Bronze	1
8	784079	Rod Assy., Shift (Incl. Nos. 9 thru 13)	1
9	784083	Rod, Shift	1
10	784004	Fork, Shifter	1
11	792017	Ring, Retainer	1
12	792004	Ball, Steel	1
13	792003	Spring	1
14	784128	Rod Assy., Shift (Incl. Nos. 10 thru 13 & 15)	1
15	784129	Rod, Shift	1
16	784177	Lever & Housing Assy., Shift (Incl. Nos. 17 thru 22)	1
17	784178	Lever, Shift	1
18	784088	Housing, Shift Lever	1
19	784094	Keeper, Shift Lever	1
20	792016	Ring, Snap	1
21	792001	Ring, Quad	1
22	792002	Pin, Roll	1
23	776079	Shaft, Shifter	1

Ref. No.	Part No.	Description	No. Used
24	778070	Gear, Bevel (33 teeth)	1
25	778071	Gear, Shift (1st & 2nd)	1
26	778072	Gear, Shift (3rd & Rev.)	1
27	778073	Idler, Reverse	1
28	778074	Gear (39 teeth)	1
29	778062	Gear (34 teeth)	1
30	778075	Gear (30 teeth)	1
31	776083	Shaft, Output	1
32	786047	Sprocket (8 teeth)	1
33	776081	Shaft, Reverse Idler	1
34	784132	Stop, Shifter	1
35	792035	Ring, Retainer	1
37	780082	Bearing, Thrust	1
38	780001	Washer	1
39	792045	Key, Woodruff	1
40	792046	Screw, Hex hd.Self tap	1
41	788040	Ring, Retainer	1
42	792034A	Key, Counter shaft	1
43	786036	Spacer, Reverse idler	1
44	792007	Screw, Socket hd. cap	1
45	788041	Gasket, Transmission	1
46	778077	Pinion, Input	1
47	776098	Shaft, Input	1
48	786026	Pin, Dowel	1
49	780092	Bearing, Ball	1
50	788038	Ring, Retaining	1
51	792047	Key, Woodruff	1

CARBURETOR ADJUSTMENTS

Do not make unnecessary adjustments. Factory settings are correct for most applications. If adjustments are needed, procees as follows:

1. Close power adjusting needle by turning to right (clockwise). Close finger tight only. Forcing will cause damage. (See Fig. 1).

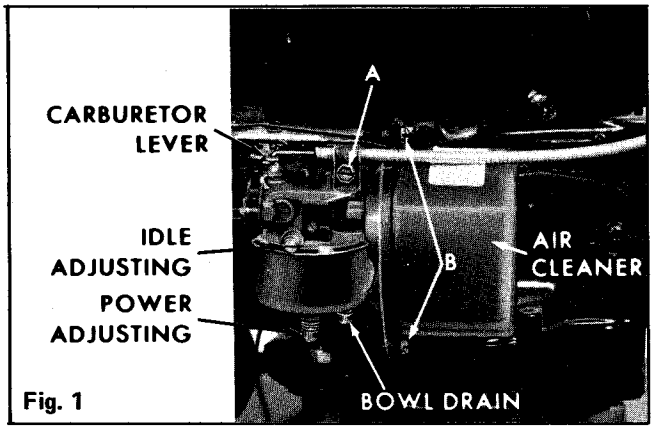

Fig. 1

2. Open one turn (counterclockwise).
3. Close idle adjusting needle by turning to right (clockwise). Close finger tight only. Forcing will cause damage. (See Fig. 1).
4. Open one and one/half turns (1½) counterclockwise.
5. Start Engine. Follow starting instructions in your owner's manual.
6. With Throttle open (carburetor control at "FAST" position), adjust power adjusting needle one-eighth (1/8) turn at a time forward or backward until engine runs smoothly. If engine tends to stall under load enrich mixture slightly (counterclockwise).
7. Hold throttle lever closed or move Carburetor Control to "SLOW" position and adjust idle adjusting needle until engine runs smoothly, proceeding as in step 6.
8. Allow several seconds between each adjustment when performing either step six (6) or seven (7) to allow engine to react to new setting.
9. Maximum engine speeds are preset at factory and should not be changed except by a qualified Toro Service repairman who has the necessary equipment.

IMPORTANT: Air cleaner should always be checked or cleaned prior to carburetor adjustments. In many cases a dirty air cleaner results in unnecessary carburetor adjustments. (See below for servicing air cleaner.)

SERVICING THE AIR CLEANER

Clean element periodically but more frequently in extreme dusty conditions. Clean element when loss of power is also noticeable. To clean element proceed as follows:

A) Loosen the two screws (B) holding air cleaner element to the carburetor (See Fig. 1).
B) Remove element from canister by turning counterclockwise.
C) Tap air cleaner element lightly on a flat surface to clean.
D) Replace element into canister and reassemble.
E) Replace element if bent or damaged in any manner.
F) Replace with a new air cleaner element after approximately 25 hours of use of as environmental conditions dictate.

OFF SEASON STORAGE

1. If it is necessary to store the tractor and the attachments for more than 60 days, remove all grass clippings, mud and dust. Wipe all lubrication points clean and lubricate.

2. Drain the gasoline from the fuel tank and the carburetor to prevent formation of gummy deposits. Run the engine until any remaining fuel is consumed. Drain the oil from the engine crankcase while warm and refill with clean oil.

3. When preparing the engine for prolonged storage, put one tablespoon of engine oil (SAE 10W) into the spark plug hole, after the spark plug has been removed. Turn the engine slowly by hand to allow the piston to distribute the oil evenly over the cylinder walls. Replace the spark plug with an old plug which will not be used again, or plug the hole with a cork. (This prevents fouling the good plug with the oil used to protect the cylinder and piston).
4. Before starting engine, remove the old spark plug or cork; reinsert the good spark plug after being sure it is clean and properly gapped according to the engine manufacturer's instructions. Check the oil in the engine and fill the fuel tank. The tractor is now ready again for operation.
5. ELECTRIC START ONLY - After prolonged storage of the tractor, it may be necessary to have the battery charged at the beginning of the season. The simplest instructions for the storage of a battery between seasons are that it be charged when stored, and then stored in a cool place, but not where it will be subjected to sub-zero temperatures. Storage at 20° to 50° is ideal. Battery should be disconnected from circuit if tractor is to be stored for 30 days or more.

WINTER OPERATION

1. If the tractor is to be used during the winter months, clean and lubricate in the same manner as for storage. Drain the engine crankcase and refill with oil as recommended by the manufacturer for the temperature range expected. Be sure the spark plug is clean and properly gapped according to the engine manufacturer's instructions.
2. It will be necessary each time to run the tractor and transmission for a few minutes, without load, until the engine and the lubricant in the transmission have thinned out sufficiently to provide lubrication. Use winter weight oil in the engine.
3. In the spring, drain and refill the engine crankcase with the normally-recommended weight of oil, and service the entire tractor carefully, according to the instructions in this manual.

SPECIFICATIONS

7 H.P. LAWN TRACTOR RECOIL MODEL 57111

ENGINE: Tecumseh Model V70-125148
FUEL TANK CAPACITY: .9 gallon under hood.
TRANSMISSION: 3 speed forward and 1 reverse die cast aluminum housing with enclosed hardened steel gears.
Reductions: 1st – 6.2:1 3rd – 3.0:1
2nd – 4.1:1 Rev. – 3.4:1
TRACTION DRIVE: "4L" section V-belt from 2.75 P.D. engine pulley to 5.25 P.D. transmission input pulley (1.9:1 reduction) No. 41 chain on 3T transmission output shaft to 40T sprocket on differential (5:1 reduction). Total reduction engine to wheels:
1st – 62:1 3rd – 30:1
2nd – 42:1 Rev. – 34:1
TRANSMISSION LUBRICATION: Permanently lubricated with 12 oz. Valvoline X-All.
DIFFERENTIAL: Die cast aluminum housing with enclosed sintered powder metal bevel gears. 3/4 axle shafts. Permanently lubricated with 1 oz. Valvoline X-All.
SPEEDS: At 3400 engine RPM
1st – 2.4 MPH 3rd – 5.0 MPH
2nd – 3.7 MPH Rev. – 4.0 MPH
WHEELS: Front and rear – stamped steel discs with drop center rims.
TIRES:
Front: 11 x 4.00-5 tubeless pneumatic terra-tire.
Rear: 15 x 6.00-6 tubeless pneumatic terra-tire.
CONSTRUCTION: 11 gage HRPO steel formed channel with 3/16 steel seat and differential support at rear. 5/8" diameter CRS spindles. 11 gage front axle. 18 gage one-piece rear fender.
STEERING: 13" Diameter 3 spoke 5" deep dish steering wheel – 2:1 ratio.
CUTTER DRIVE: Belt drive from jackshaft ahead of engine.
CUTTER HOUSING: Semi-floating 13 gage tempered steel housing attached to frame by 1/2 diameter steel pins.
CUTTER WIDTH: 32"
BLADE: Two 8 gage 16" fully hardened alloy steel.
BLADE TIP SPEED: 16,600 FPM @ 3400 engine RPM.
CUTTER SPINDLE: Steel mounted in 2 single rows, double sealed ball bearings.
HEIGHT OF CUT: 1½" to 3¼". Control lever with infinite number of settings.
CONTROLS:
Engine: Control wire and casing with stop, slow, fast and choke positions mounted on dash.
Transmission: Single lever with 4 position H pattern.
Traction Clutch: Foot operated pedal. Depressing pedal disengages idler pulley from belt.
Cutter: Single lever. In lock-out position blade belt idler is disengaged and blade brake applied. In engaged position, brake is released and cutter belt engaged.
DIMENSIONS:
Wheel base: 39"
Wheel tread: 23½" front
22" rear
27" front - outside to outside
28" rear - outside to outside
Turning radius: 33"
Length: 52½"
Width: 33½"
Height: 33"
WEIGHT: 260 pounds with 32" cutter.
SAFETY FEATURES: Meets U.S.A.S. Specifications. Separate brake and clutch control. Automatic blade brake. Enclosed and guarded drive.
OPTIONAL EQUIPMENT:
30" Snow Blade #59033
Bagging Kit #T-100
Dump Cart #59003
32" Lawn Roller #9T
30" Lawn Aerator #25 H
30" Seeder Spreader #30 H-26
30" Lawn Sweeper #TE-6430
Tire Chains #59035.

SPECIFICATIONS

7 H.P. LAWN TRACTOR ELECTRIC START MODEL 57222

ENGINE: Tecumseh Model V70-125149
FUEL TANK CAPACITY: .9 gallon under hood.
TRANSMISSION: 3 speed forward and 1 reverse die cast aluminum housing with enclosed hardened steel gears.
Reductions: 1st – 6.2:1 3rd – 3.0:1
2nd – 4.1:1 Rev. – 3.4:1
TRACTION DRIVE: "4L" section V-belt from 2.75 P.D. engine pulley to 5.25 P.D. transmission input pulley (1.9:1 reduction) No. 41 chain on 3T transmission output shaft to 40T sprocket on differential (5:1 reduction). Total reduction engine to wheels:
1st – 62:1 3rd – 30:1
2nd – 41:1 Rev. – 34:1
TRANSMISSION LUBRICATION: Permanently lubricated with 12 oz. Valvoline X-All.
DIFFERENTIAL: Die cast aluminum housing with enclosed sintered powder metal bevel gears. 3/4 axle shafts. Permanently lubricated with 1 oz. Valvoline X-All.
SPEEDS: At 3400 engine RPM.
1st – 2.4 MPH 3rd – 5.0 MPH
2nd – 3.7 MPH Rev. – 4.0 MPH
WHEELS: Front and rear – stamped steel discs with drop center rims.
TIRES:
Front: 11 x 4.00-5 tubeless pneumatic terra-tire.
Rear: 15 x 6.00-6 tubeless pneumatic terra-tire.
ELECTRICAL SYSTEM: 12 Volt battery, Starter, 3 Amp Alternator, Key Switch.
CONSTRUCTION: 11 gage HRPO steel formed channel with 3/16 steel seat and differential support at rear. 5/8" diameter CRS Spindles. 18 gage one-piece rear fender. 11 Gage front axle.
STEERING: 13" Diameter 3 spoke 5" deep dish steering wheel – 2:1 ratio.
CUTTER DRIVE: Belt drive from jackshaft ahead of engine.
CUTTER HOUSING: Semi-floating 13 gage tempered steel housing attached to frame by 1/2 diameter steel pins.
CUTTER WIDTH: 32".
BLADE: Two 8 gage 16" fully hardened alloy steel.
BLADE TIP SPEED: 16,600 FPM @ 3400 engine RPM.
CUTTER SPINDLE: Steel mounted in 2 single rows, double sealed ball bearings.
HEIGHT OF CUT: 1½" to 3¼". Control lever with infinite number of settings.

SPECIFICATIONS (Continued)

7 H.P. LAWN TRACTOR ELECTRIC START MODEL 57222

CONTROLS:

Engine: Control wire and casing with stop, slow, fast and choke positions mounted on dash.

Transmission: Single lever with 4 position H pattern.

Traction Clutch: Foot operated pedal. Depressing pedal disengages idler pulley from belt.

Cutter: Single lever. In lock-out position blade belt idler is disengaged and blade brake applied. In engaged position, brake is released and cutter belt engaged.

DIMENSIONS:

Wheel base: 39"
Wheel tread: 23½" front
22" rear
27" front - outside to outside
28" rear - outside to outside
Turning radius: 33"
Length: 52½"
Width: 33½"
Height: 33"

WEIGHT: 290 pounds with 32" cutter.

SAFETY FEATURES: Meets U.S.A.S. Specifications. Separate brake and clutch control. Automatic blade brake. Enclosed and guarded drive.

OPTIONAL EQUIPMENT:

30" Snow Blade #59033
Bagging Kit #T-100
Dump Cart #59003
32" Lawn Roller #9T
30" Lawn Aerator #25H
30" Seeder Spreader #30H-26
30" Lawn Sweeper #TE-6430
Tire Chains #59035

BRAKE: Foot operated pedal – right side. Depressing pedal engaged band on 2½" dia. drum.

WARNING

Never operate engine with battery leads disconnected or battery removed from circuit (taken out of equipment) unless both rectifiers are removed from rectifier panel. Failure to observe will burn out fuse and generator.

THE TORO PROMISE

It is Toro's policy to design and produce Toro products to provide our customers with a high level of performance and durability in normal operation. Our products, however, are produced in high volume, and it is inevitable that occasionally a unit will reach a customer with a defect in materials or workmanship which causes that unit to fall below the normal high level of Toro performance. Invariably, such a defect will be noticed in a residential product within one year, and in an institutional product within ninety days after purchase. Recognizing this possibility, Toro has established a simple guarantee policy and procedure that is intended to assure customer satisfaction. This guarantee statement is as follows:

The Toro Promise

Toro Manufacturing Corporation promises to repair any TORO product for the original purchaser if defective in materials or workmanship. The following time periods from the date of purchase apply:

Residential products	1 year
Residential products used commercially	45 days
Institutional products	90 days

The costs of parts and labor are included, but the customer pays the transportation costs. Just return any residential product to a TORO Service Dealer, or any institutional product to a TORO distributor.

Should you feel that a product is defective, and wish to rely on The Toro Promise, the following procedure is recommended:

1. Contact any TORO dealer or distributor, but preferably the dealer or distributor from whom you purchased the product.
2. He will instruct you to either return the product to him, or tell you the name and address of your nearest TORO Service Dealer if the product is to be returned to such dealer.
3. Take the product and your original sales slip, or other evidence of purchase date, to the servicing dealer.
4. The servicing dealer will inspect the unit, advise you whether the product is defective and, if so, make all repairs necessary to correct the defect without extra charge to you.

If for any reason you are dissatisfied with the dealer's analysis of the defect or the service he performs, we urge you to contact us. Write:

TORO "Customer Care" Department
8111 Lyndale Avenue South
Minneapolis, Minnesota 55420

MAINTENANCE RECORD

TORO
We Take Care™

IMPORTANT ORDERING INSTRUCTIONS

Repair parts are available from your TORO dealer. To insure getting correct parts without delay, please furnish the following information:

1. Serial number of your product as shown on the name plate.
2. Part number, description and quantity of each part required.
3. Name and address where parts are to be shipped.
4. Do NOT order by reference number, use part number only.

MAINTENANCE RECORD

Litho in U.S.A.