Form No. 3405-677 Rev C

TORO®

Count on it.

Parts Catalog

TITAN® HD 2000 Series

Riding Mower with 60in Rear-Discharge Deck

Model No. 74463—Serial No. 400000000 and Up

Register at www.Toro.com.
Original Instructions (EN)

3405-677 C

Ordering Replacement Parts

To order replacement parts, please supply the part number, the quantity, and the description of each part desired.

Understanding Reference Numbers

Each identified part in an illustration has a reference number. The reference number for a part also appears in the parts list, along with other information about the part.

This catalog uses two special reference number formats, one to indicate parts in a service assembly and another to indicate the quantity of a given part in an illustration.

Service Assembly Reference Numbers

Parts in service assemblies have reference numbers in the form a:b. The a represents the reference number of the entire service assembly and the b represents a sequential number unique to each part within the service assembly.

For example, a wheel assembly might be identified by reference number 6, the tire by 6:1, the valve by 6:2, and the wheel by 6:3. When you order the assembly identified by reference number 6, you receive all parts identified by reference numbers 6:1,6:2, and 6:3. However, you may also order any part individually. Reference numbers of this type appear in illustration and in parts lists.

Reference Numbers Indicating Quantity

In an illustration, if a reference number indicates more than one part, the reference number has the form nX y. The n represents the quantity of the part, the X is the multiplication symbol, and the y represents the reference number.

For example, in an illustration, the reference number 2X 37 means that two of the parts identified by reference number 37 are indicated.

Contents

Frame, Roll-Over Protection System and Wheel Assembly 4
Fork and Caster Wheel Assembly 6
Roll-Over Protection System Assembly No. 126-9526 8
Hydraulic Assembly 10
LH Transaxle Assembly No. 126-2883 12
RH Transaxle Assembly No. 126-2884 14
Discharge Tunnel Assembly No. 126-1985 16
Control Console and Guard Assembly 18
Fuel Tank and Vent Hose System Assembly 20
Fuel Tank Assembly No. 126-4724 22
Seat Mount Assembly 24
Seat Pan and Latch Assembly No. 126-7309 26
Seat Assembly No. 126-8293 28
Motion Control Assembly 30
LH Motion Control Assembly 32
RH Motion Control Assembly 34
Electrical System Assembly 36
Wire Harness Assembly No. 126-5803 38
Deck Lift Assembly 40
Deck Strut Assembly No. 126-8365 42
Engine Assembly 44
Deck Assembly 46
Deck Decal Assembly No. 126-8924 48
Idler Assembly No. 126-0853 50
Idler Arm Assembly No. 126-0976 52
Attachments and Accessories 54

© 2021—The Toro® Company
8111 Lyndale Avenue South
Bloomington, MN 55420

Contact us at www.Toro.com.
Printed in the USA.
All Rights Reserved

Frame, Roll-Over Protection System and Wheel Assembly

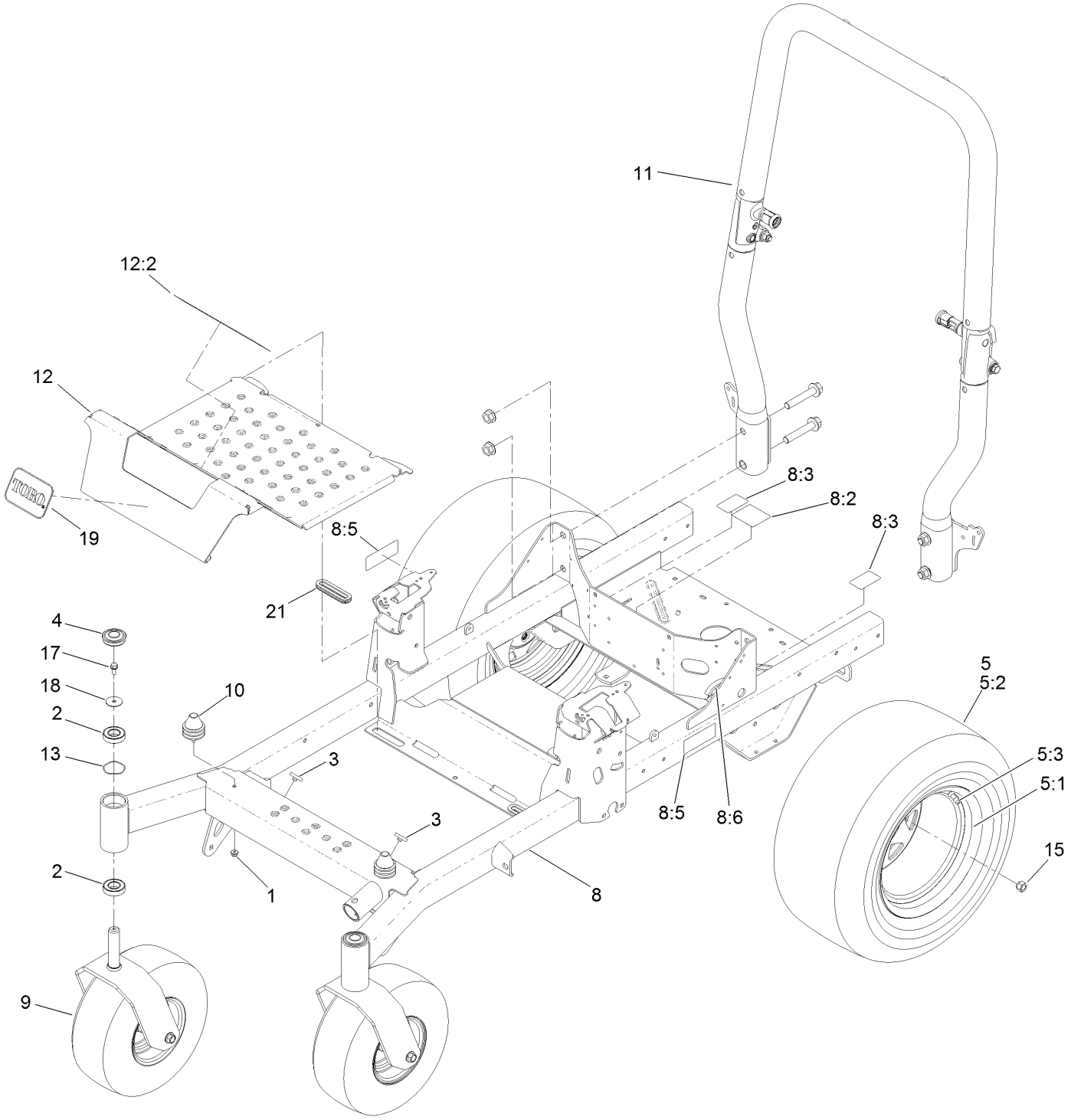

Frame, Roll-Over Protection System and Wheel Assembly (continued)

Ref.	Part Number	Qty.	Description
1	104-8300	2	Nut-HF, NI
2	109-3678	4	Bearing-Ball
3	109-9233	2	Bumper-Push-In, Rubber
4	116-4348	2	Cap-Grease
5	126-7833	2	Wheel And Tire ASM
5:1	126-2878	1	Rim-Wheel
5:2	120-3269	1	Tire
5:3	232-27	1	Stem-Valve
8	126-4712	1	Frame ASM
8:2	109-6014	1	Decal-Routing, Belt
8:3	116-8588	2	Decal-Release, Drive
8:5	126-4363	2	Decal-Warning
8:6	127-6618	1	Strip-Seal
9		2	Front Caster ASM (W/Fork) ●
10	126-5491	2	Isolator
11	126-9526	1	ROPS ASM
12	126-5872	1	Pan-Floor
12:2	126-8383	1	Decal-Danger
13	126-5897	2	Spring
15	242-50	8	Nut-Lug
17	3234-5	2	Screw-HHF
18	3256-68	2	Washer-Flat
19	67-1300	1	Decal
21	126-7065	2	Grommet-Rubber

● Not serviced separately

Fork and Caster Wheel Assembly

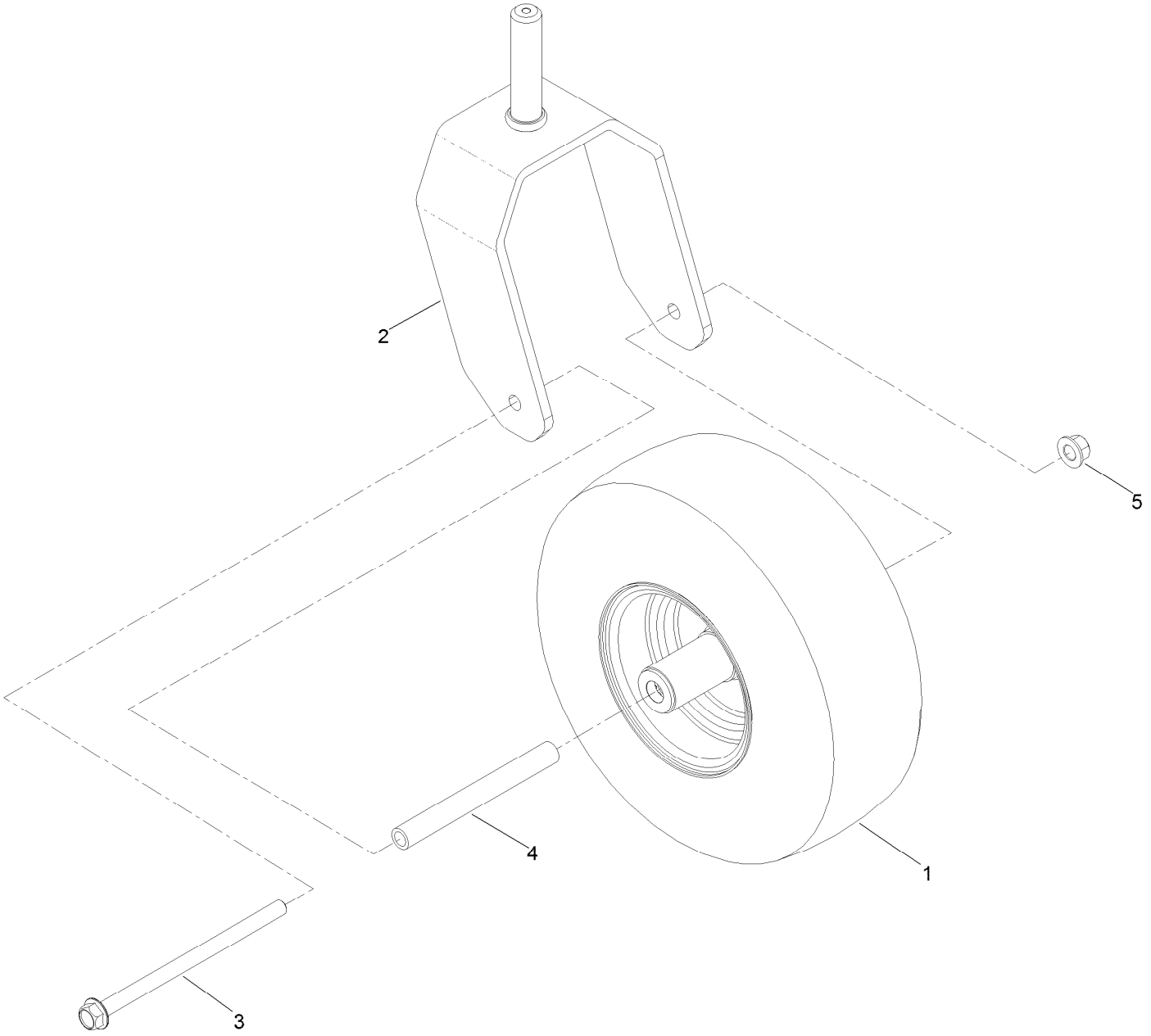

Fork and Caster Wheel Assembly (continued)

Ref.	Part Number	Qty.	Description
1	126-7592	1	Wheel And Tire ASM
2	126-4312-01	1	Fork-Caster
3	126-5389	1	Screw-HHF
4	127-0068	1	Spanner-Wheel, Caster
5	99-5107	1	Nut-Lock

Roll-Over Protection System Assembly
No. 126-9526

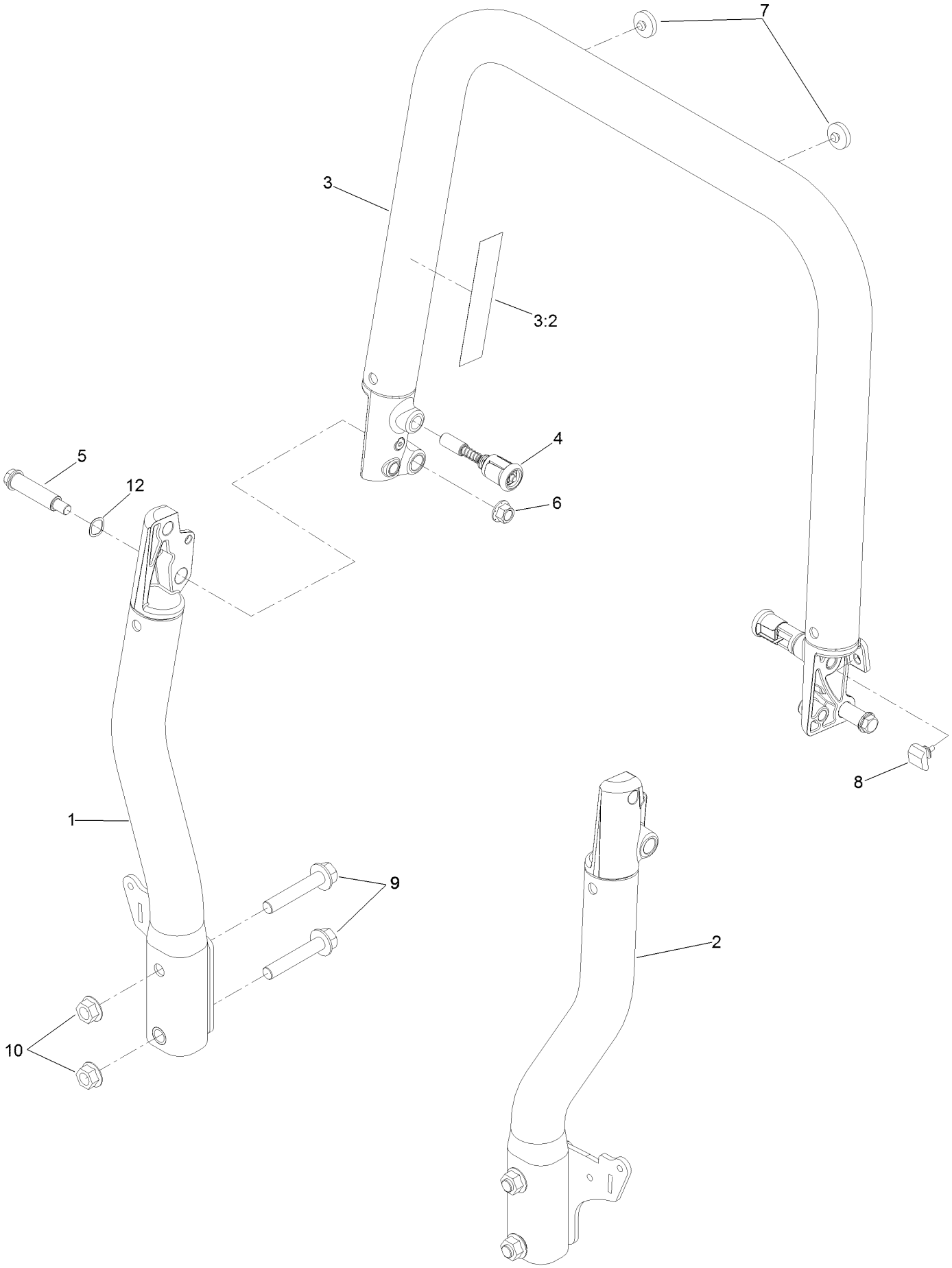

Roll-Over Protection System Assembly No. 126-9526 (continued)

Ref.	Part Number	Qty.	Description
1		1	Tube-Upright, RH ●
2		1	Tube-Upright, LH ●
3		1	Top Tube ASM ●
3:2	107-3069	1	Decal-Warning
4	116-0104	2	Pin-Spring
5	126-9209	2	Bolt-Shoulder
6	99-5107	2	Nut-Lock
7	109-9233	2	Bumper-Push-In, Rubber
8	126-9966	2	Bumper-ROPS
9	126-9488	4	Screw-HHF
10	32128-50	4	Nut-Flange
12	119-4164	2	Washer-Wave

● Not serviced separately

Hydraulic Assembly

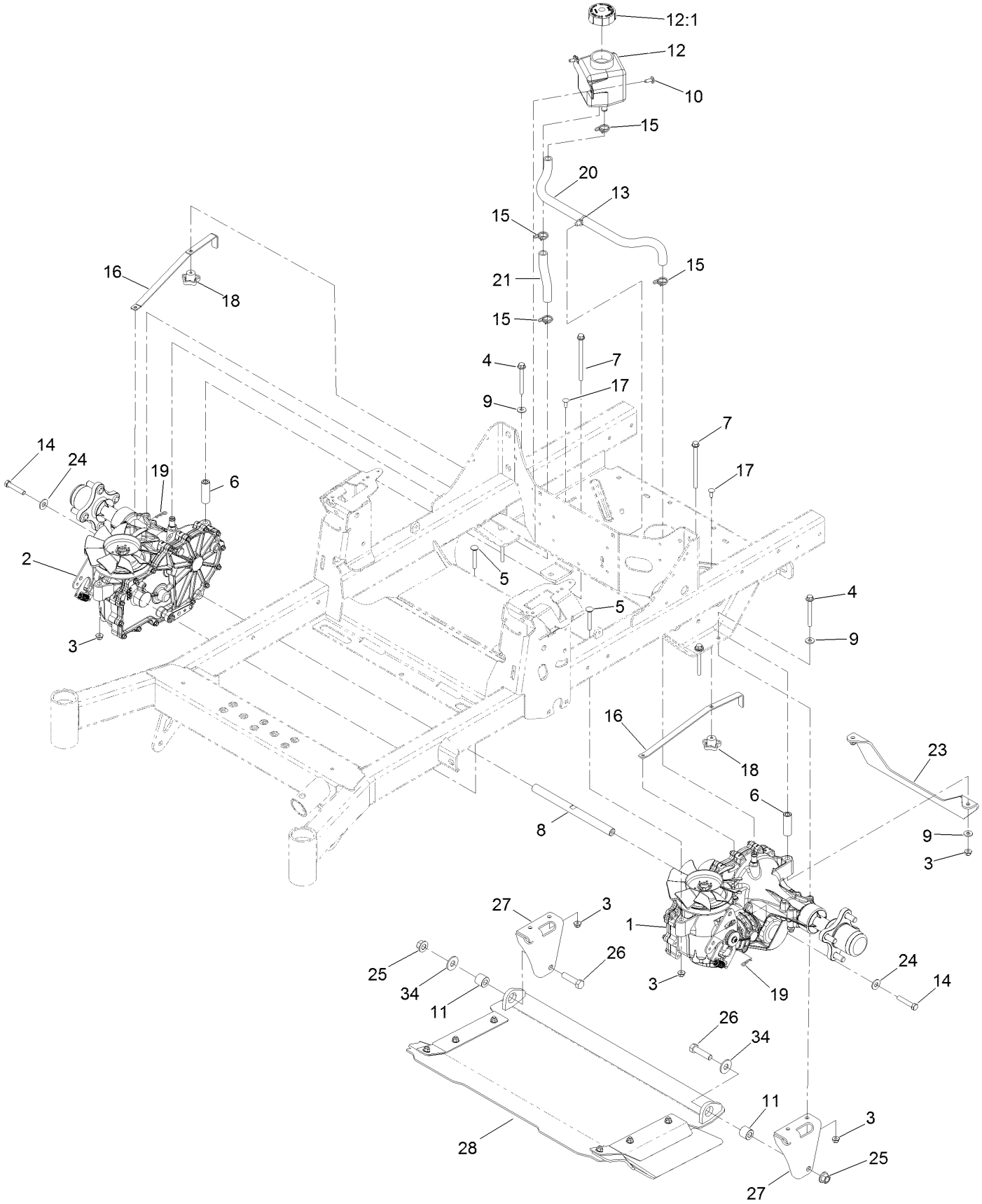

Hydraulic Assembly (continued)

Ref.	Part Number	Qty.	Description
1	126-2883	1	LH Transaxle ASM
2	126-2884	1	RH Transaxle ASM
3	104-8300	8	Nut-HF, NI
4	126-4687	4	Screw-HHF
5	3230-7	2	Bolt-CARR
6	116-5809	2	Spacer-Hydro
7	126-5896	2	Screw HHF
8	116-6833	1	Shaft-Spacer
9	1-303334	6	Washer-Spring
10	126-6266	2	Screw-Tph
11	126-1705	2	Bushing-Sleeve
12	109-2250	1	Tank-HYD
12:1	109-3320	1	Cap-Reservoir, HYD
13	32180-118	1	Clip-Tie
14	94-7972	2	Screw-HH W/Loctite ●
15	126-0327	4	Clamp-Hose
16	109-5395	2	Arm-Bypass, Hydro
17	3229-1	2	Screw-CARR
18	108-6402	2	Knob-Handle
19	1-806003	2	Pin-Cotter
20	126-5668	1	Hose-Hydraulic
21	126-5669	1	Hose-Hydraulic
23	126-5672-03	1	Support-Transmission
24	3256-4	2	Washer-Flat
25	99-5107	2	Nut-Lock
26	325-8	2	Screw-HH
27	126-1988-03	2	Bracket-Mount, Discharge
28	126-1985	1	Discharge Tunnel ASM
34	3256-6	2	Washer-Flat

● Use Pro-Lock, Nut Type (P/N 1-840022, .5ml tube) on threads.

LH Transaxle Assembly No. 126-2883

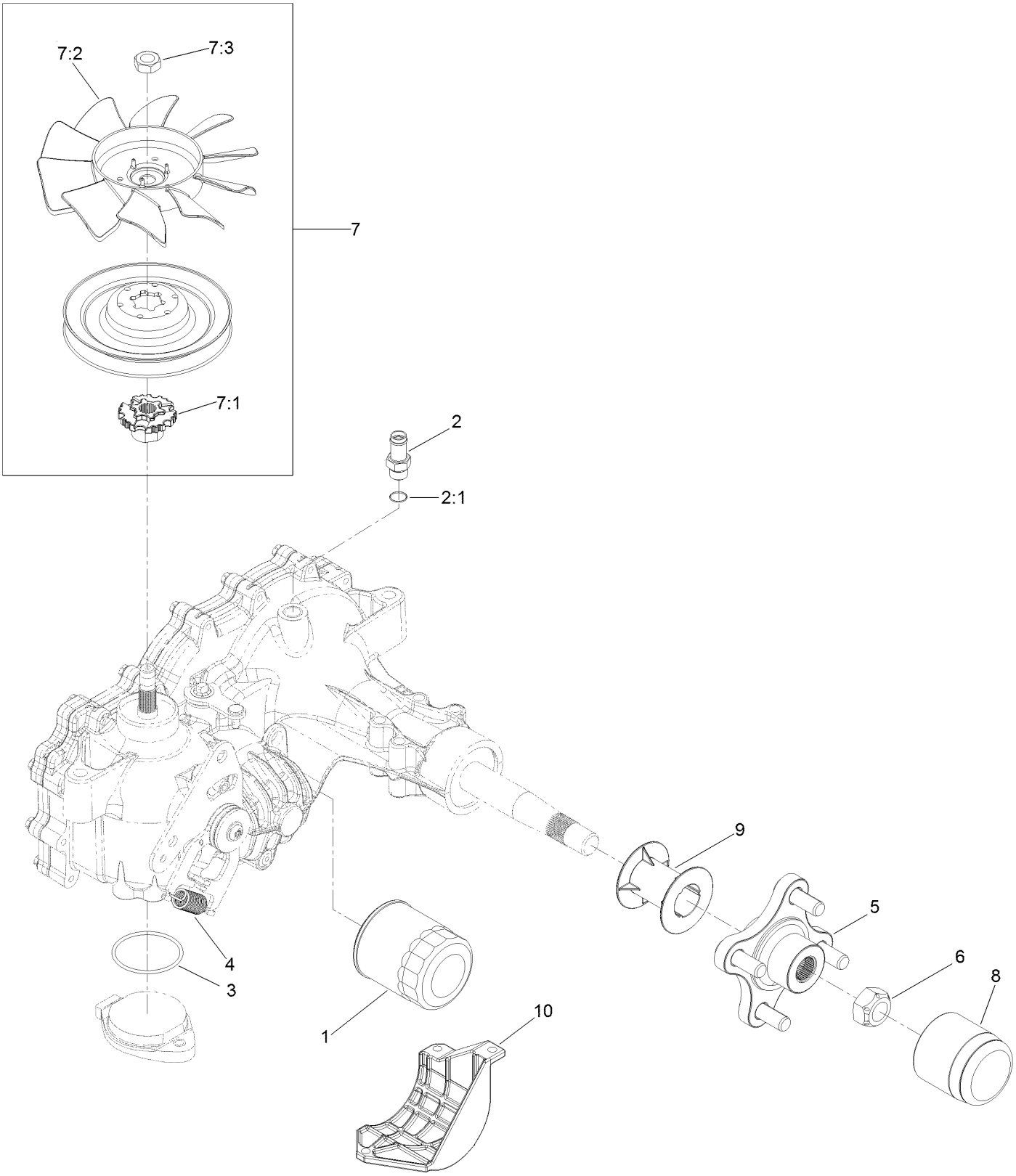

LH Transaxle Assembly No. 126-2883 (continued)

Ref.	Part Number	Qty.	Description
1	109-3321	1	Element-Oil Filter, HYD
2	109-3278	1	Adapter-Straight
2:1	237-42	1	O-Ring
3	109-3540	1	O Ring-Seal
4	109-5592	1	Spring-Extension
5	116-3872	1	Hub-Offset
6	109-3536	1	Nut-Hub
7	126-8904	1	Fan And Pulley Kit

Ref.	Part Number	Qty.	Description
7:1	126-8905	1	Hub-Fan
7:2	126-0226	1	Fan
7:3	116-9714	1	Nut-HJ
8	116-6214	1	Cap-Axle, Long
9	116-6213	1	Tube-Axle
10	120-7979	1	Guard-Filter, LH
11	121-3243	1	Seal Kit ●

● Not illustrated

RH Transaxle Assembly No. 126-2884

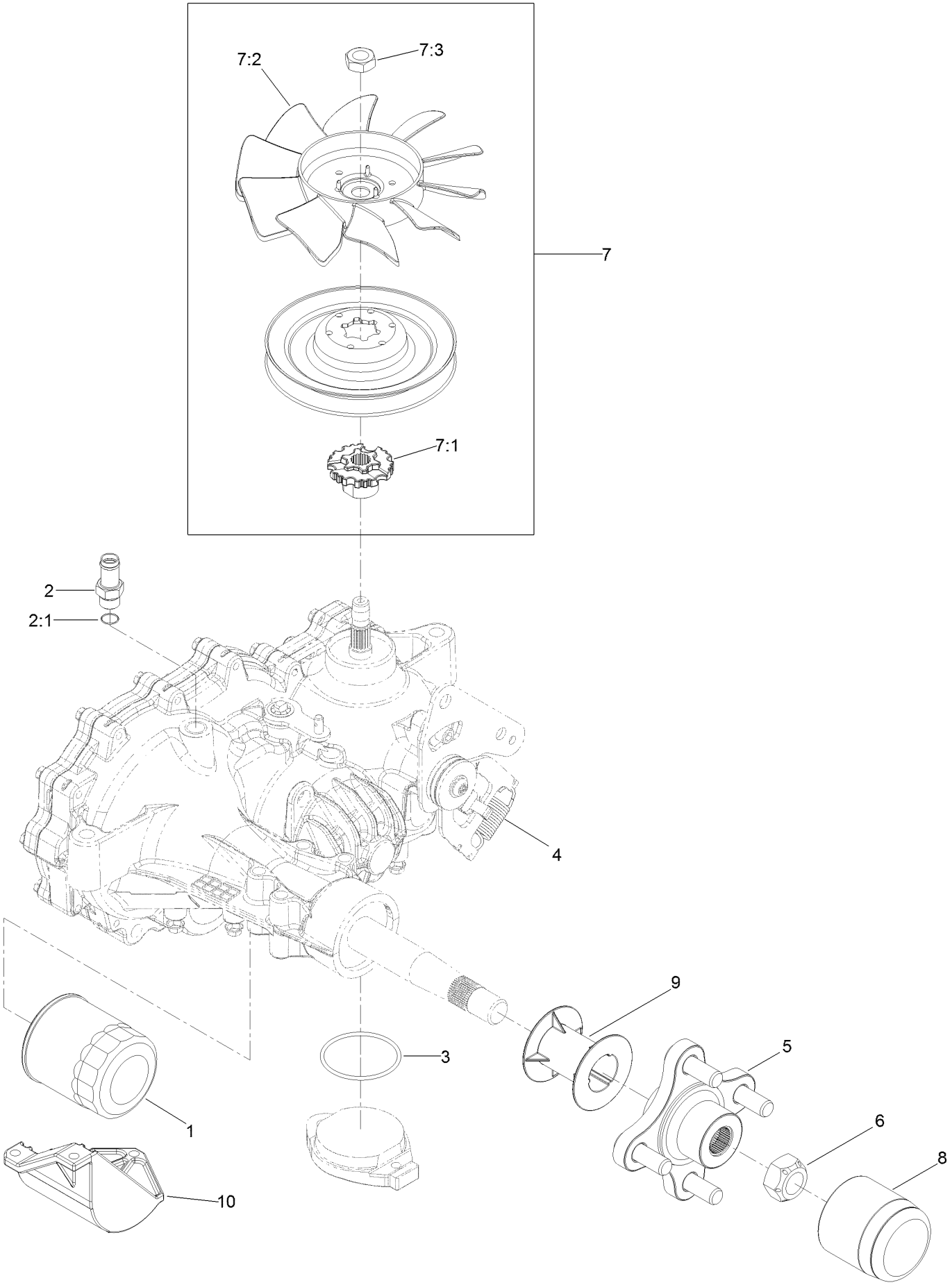

RH Transaxle Assembly No. 126-2884 (continued)

Ref.	Part Number	Qty.	Description
1	109-3321	1	Element-Oil Filter, HYD
2	109-3278	1	Adapter-Straight
2:1	237-42	1	O-Ring
3	109-3540	1	O Ring-Seal
4	109-5592	1	Spring-Extension
5	116-3872	1	Hub-Offset
6	109-3536	1	Nut-Hub
7	126-8904	1	Fan And Pulley Kit

Ref.	Part Number	Qty.	Description
7:1	126-8905	1	Hub-Fan
7:2	126-0226	1	Fan
7:3	116-9714	1	Nut-HJ
8	116-6214	1	Cap-Axle, Long
9	116-6213	1	Tube-Axle
10	120-7981	1	Guard-Filter, RH
11	121-3243	1	Seal Kit ●

● Not illustrated

Discharge Tunnel Assembly No. 126-1985

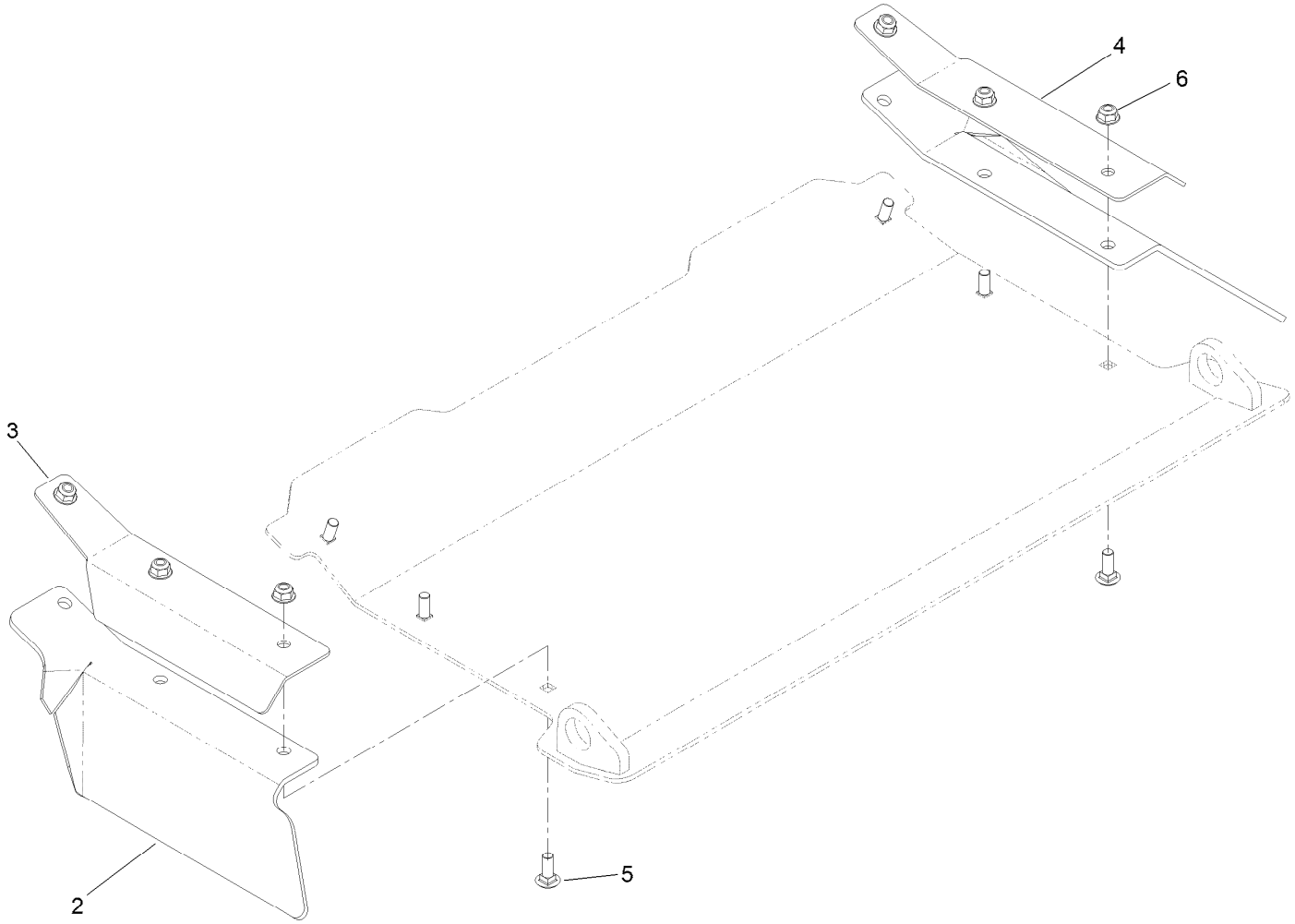

Discharge Tunnel Assembly No. 126-1985 (continued)

Ref.	Part Number	Qty.	Description
2	125-9368	2	Flap-Rubber
3	125-9366-03	1	Bracket-Flap, LH
4	125-9367-03	1	Bracket-Flap, RH
5	3230-16	6	Screw-CARR
6	104-8300	6	Nut-HF, NI

Control Console and Guard Assembly

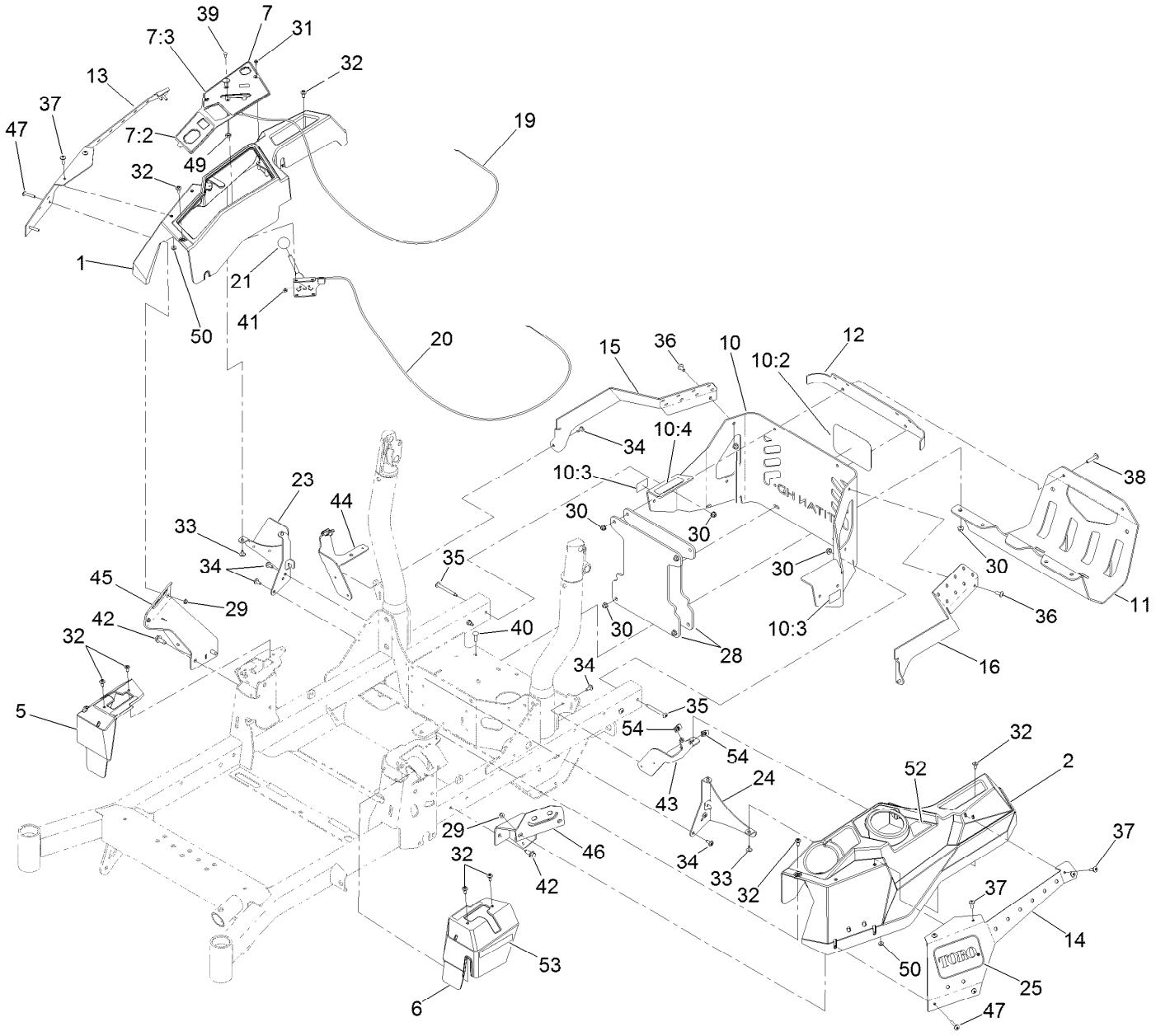

Control Console and Guard Assembly (continued)

Ref.	Part Number	Qty.	Description
1	126-4983	1	Console-RH
2	126-4984	1	Console-LH
5	126-7371	1	Cover-Control, Motion (RH)
6	126-7372	1	Cover-Control, Motion (LH)
7	136-1673	1	Control Panel ASM
7:2	126-9115	1	Decal-Panel, Control
7:3	136-1305	1	Decal-Panel, Control
10	126-7803	1	Rear Guard ASM
10:2	99-4693	1	Decal
10:3	106-5517	2	Decal-Warning
10:4	117-2718	1	Decal-Arrester, Spark
11	126-7664-03	1	Guard-Muffler
12	126-6260-01	1	Trim-Upper, Rear
13	136-1745-01	1	Cover-Pod, RH
14	136-1746-01	1	Cover-LH
15	126-9023-01	1	Bracket-Guard, RH
16	126-9022-01	1	Bracket-Guard, LH
19	126-6947	1	Cable-Control, Choke
20	126-6946	1	Cable-Control, Throttle
21	1-603175	1	Knob-Ball
23	126-9945	1	Support-Console, RH
24	126-5532-03	1	Bracket-Console, LH
25	68-3640	2	Decal
28	126-9165-01	2	Weight-Rear

Ref.	Part Number	Qty.	Description
29	104-7201	4	Nut-Flange, NI
30	104-8300	12	Nut-HF, NI
31	117-5036	2	Screw-Plastic, HWH
32	120-7950	8	Screw-Torx
33	126-5544	4	Screw-Torx
34	126-6266	8	Screw-Tph
35	126-6267	4	Screw-Torx
36	126-6268	2	Screw-Torx
37	126-6269	8	Screw-Truss
38	126-7439	4	Screw-Torx
39	1-807513	2	Bolt-CARR
40	3230-22	2	Screw-CARR
41	3296-2	2	Nut-Lock, NI
42	126-1696	4	Screw-Forming, Thread
43	126-9808-03	1	Bracket-Support, Left Pod
44	126-9809-03	1	Bracket-Support, Right Pod
45	126-9104-01	1	Support-Pod, RH
46	126-9105-01	1	Support-Pod, LH
47	126-8232	4	Screw-Truss
49	3220-3	1	Nut-HJ
50	32149-2	4	Nut-Keps
52	126-9939	1	Decal-Fill, Fuel
53	126-9299	2	Decal
54	126-3739	4	Nut-Retainer

Fuel Tank and Vent Hose System Assembly

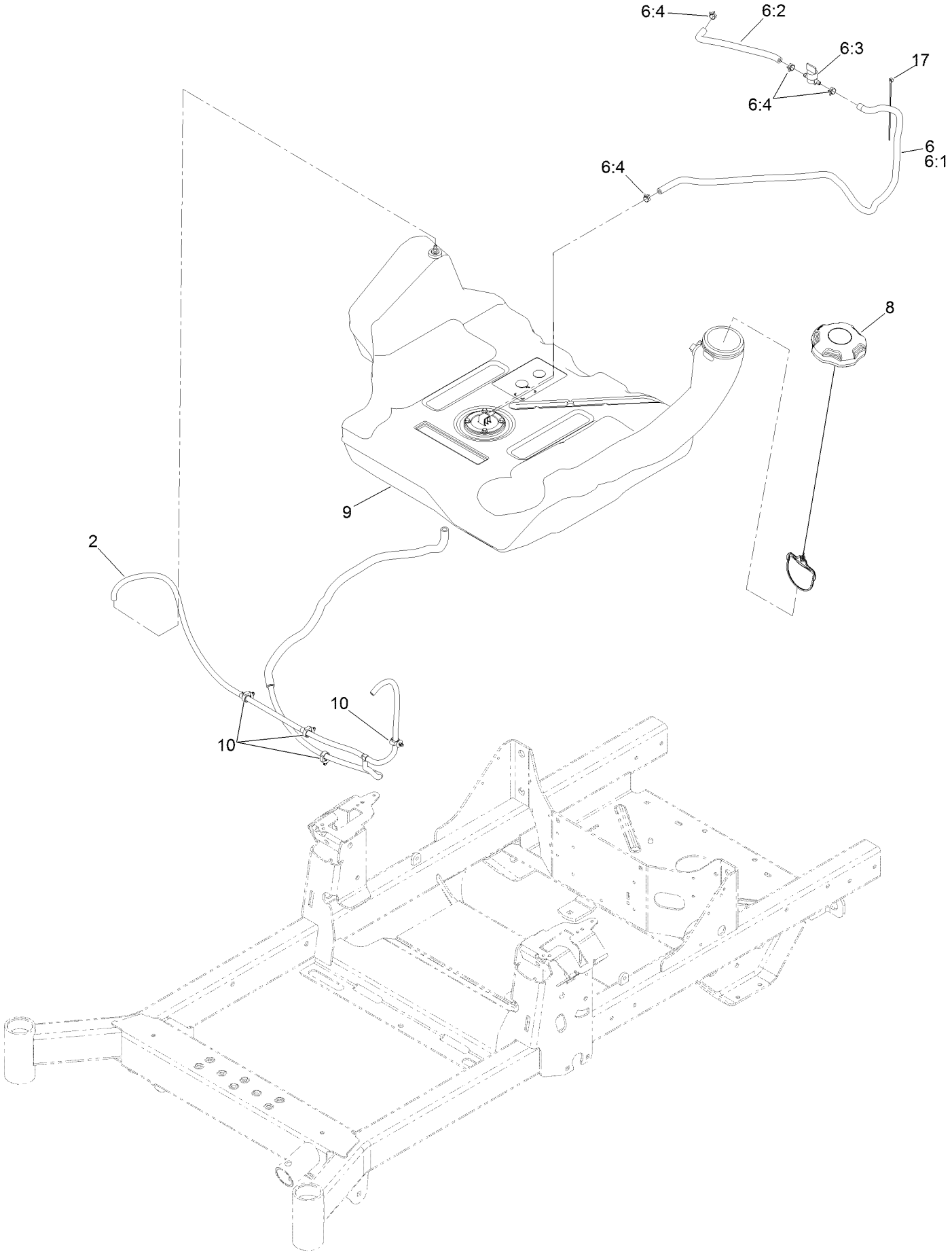

Fuel Tank and Vent Hose System Assembly (continued)

Ref.	Part Number	Qty.	Description
2	126-8735	1	Hose-Vent
6	126-8739	1	Fuel Hose ASM
6:1	110-5702	1	Hose-Fuel
6:2	109-0282	1	Hose-Fuel
6:3	1-603770	1	Valve-Fuel
6:4	2412-98	4	Clamp-Hose
8	126-4723	1	Cap-Fuel
9	126-4724	1	Tank-Fuel
10	126-5523	4	Clip
17	1-303287	1	Tie-Cable

Fuel Tank Assembly No. 126-4724

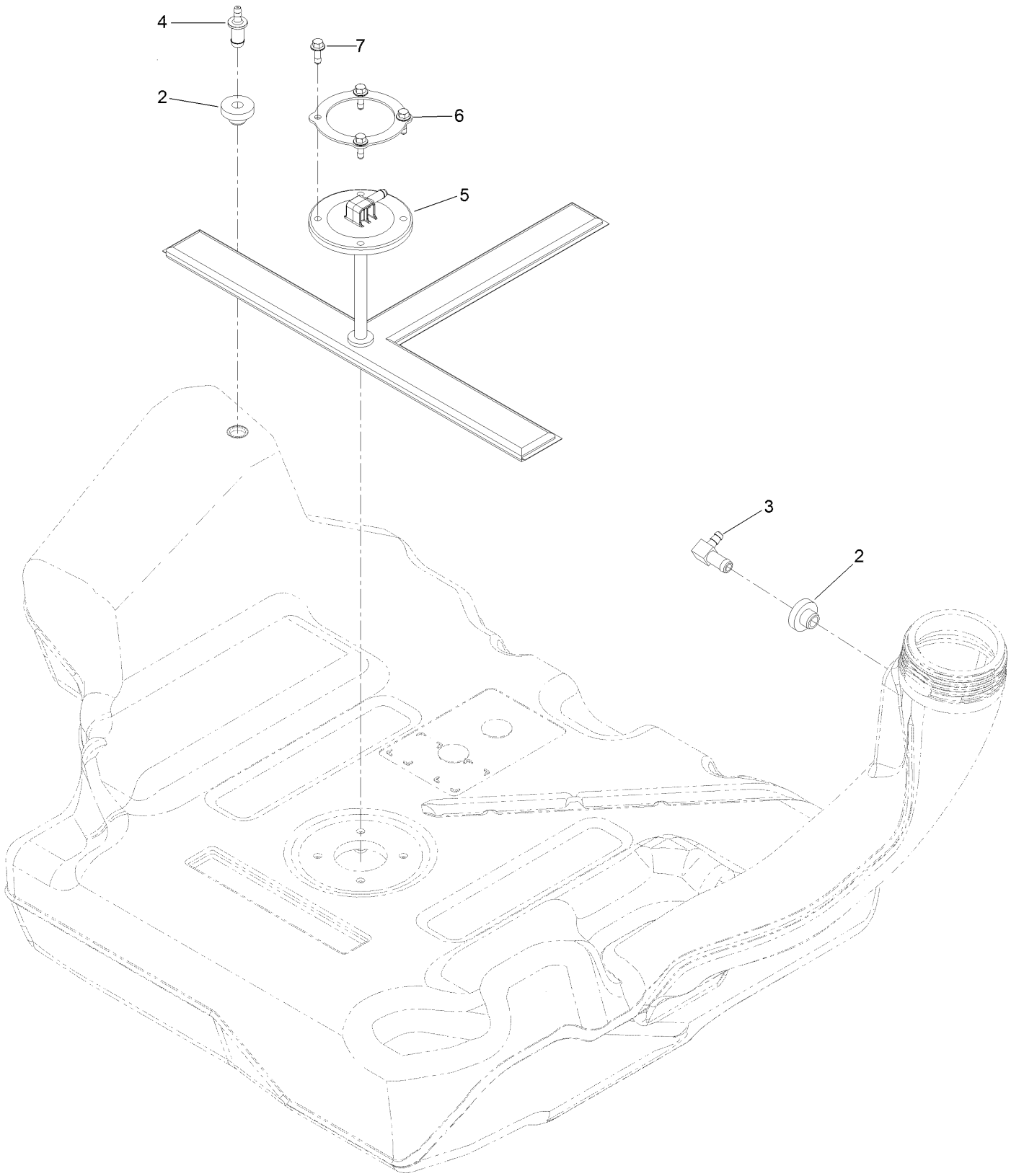

Fuel Tank Assembly No. 126-4724 (continued)

Ref.	Part Number	Qty.	Description
2	46-6560	2	Bushing
3	126-9057	1	Fitting-90 DEG
4	116-4630	1	Fitting-Orifice, Straight
5	126-5528	1	Pickup-Fuel
6	126-5527	1	Ring-Retainer
7	126-5525	4	Bolt

Seat Mount Assembly

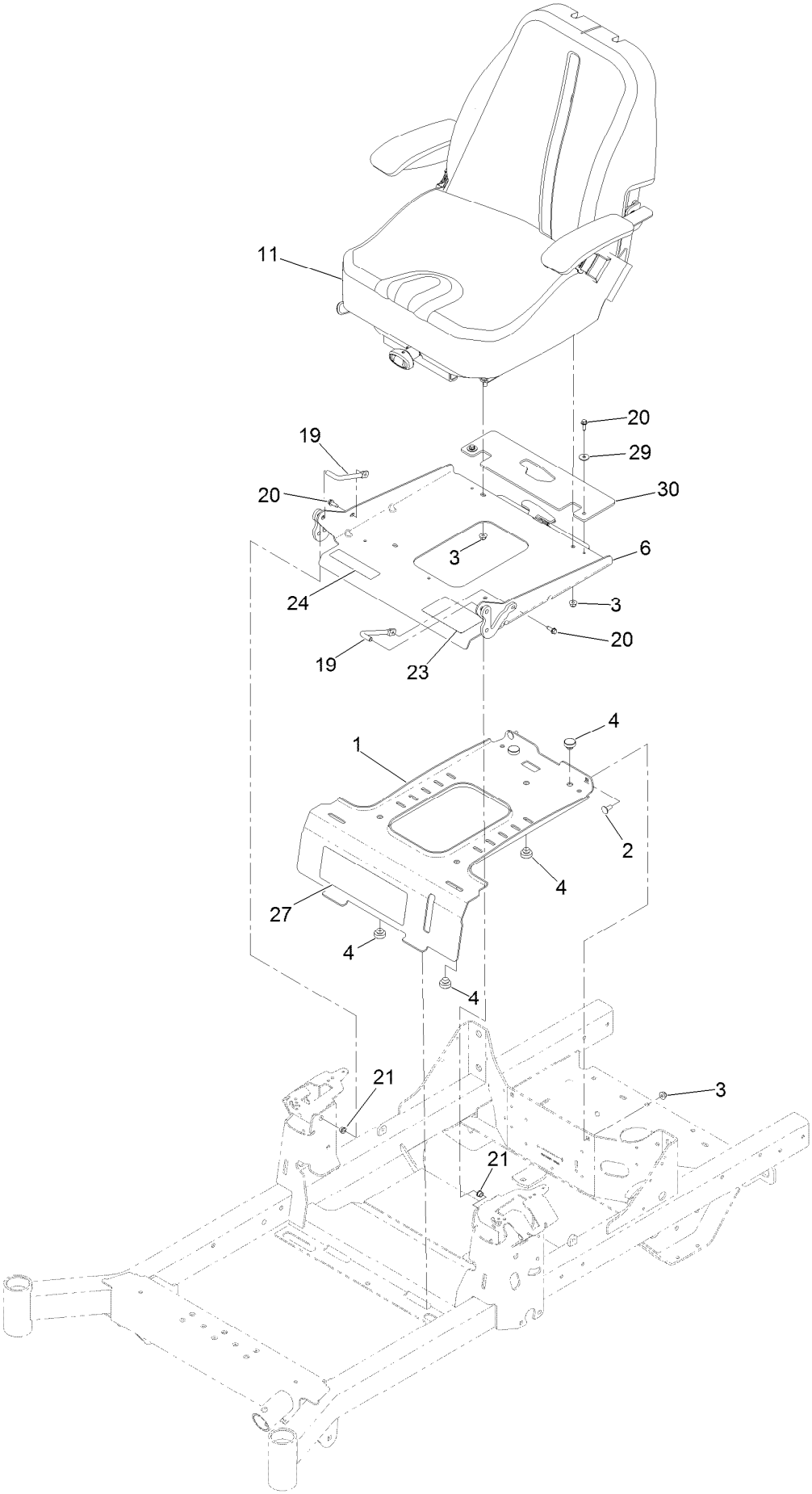

Seat Mount Assembly (continued)

Ref.	Part Number	Qty.	Description
1	126-4082-03	1	Plate-Retainer, Tank
2	3230-23	2	Bolt-CARR
3	104-8300	6	Nut-HF, NI
4	104-1412	5	Bumper-Rubber
6	126-7309	1	Seat Pan And Latch ASM
11	126-8293	1	Seat ASM
19	126-5914	2	Pin-Pivot, Seat
20	32144-44	4	Screw-HWH, Thread Roll
21	1-603735	2	Bushing-Flanged
23	126-8151	1	Decal-Aid, Service
24	126-8161	1	Decal-Latch, Seat
27	126-9273	1	Decal
29	3256-67	2	Washer
30	135-0214	1	Guard-Seat, Rubber

Seat Pan and Latch Assembly No. 126-7309

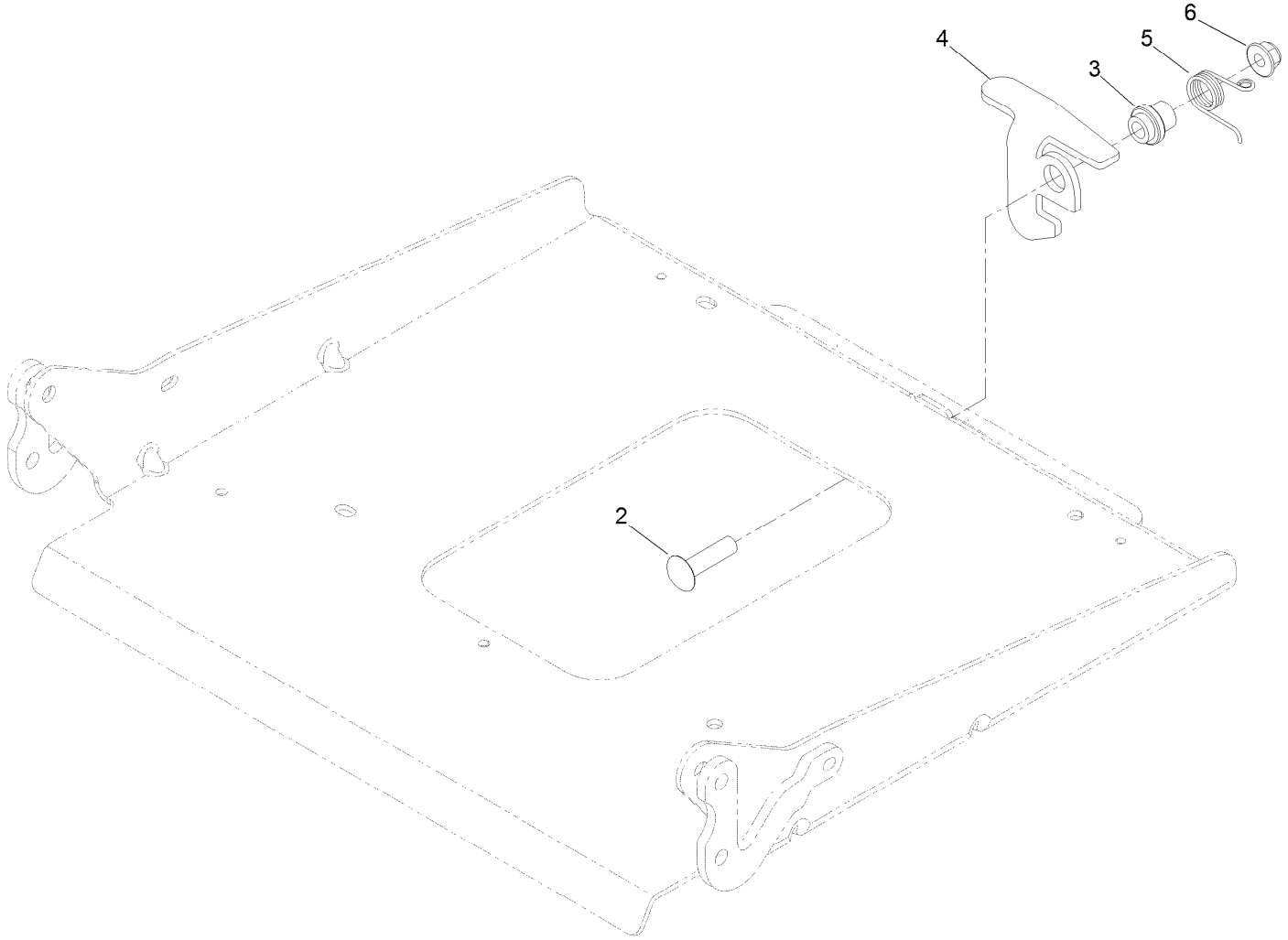

Seat Pan and Latch Assembly No. 126-7309 (continued)

Ref.	Part Number	Qty.	Description
2	3231-26	1	Screw-CARR
3	107-0075	1	Bushing-Latch, Seat
4	126-6739	1	Latch-Catch, Single
5	126-8923	1	Spring-Torsion, Latch
6	104-8301	1	Nut-HF, NI

Seat Assembly No. 126-8293

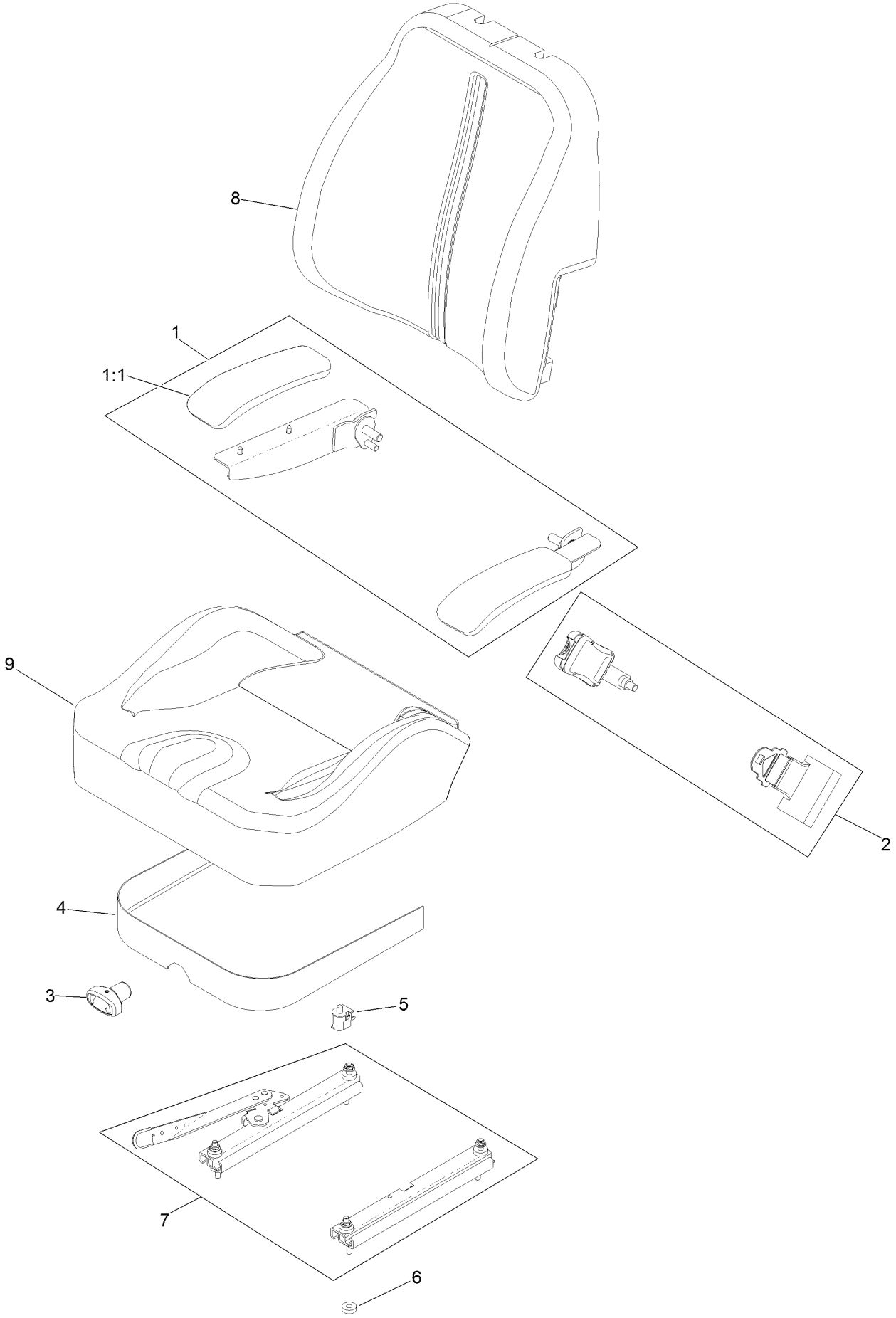

Seat Assembly No. 126-8293 (continued)

Ref.	Part Number	Qty.	Description
1	126-2058	1	Armrest Kit
1:1	110-4163	2	Cushion-Rest, Arm
2	130-0845	1	Seat Belt Kit
3	130-0846	1	Knob-Adjuster
4	126-3506	1	Cover-Skirt W/Fasteners
5	82-2190	1	Switch-Bail
6	26-4840	4	Spacer-Pin, Mounting
7	130-0844	1	Track Set
8	126-8569	1	Cover-Back, Seat
9	126-8568	1	Cover-Seat, Bottom

Motion Control Assembly

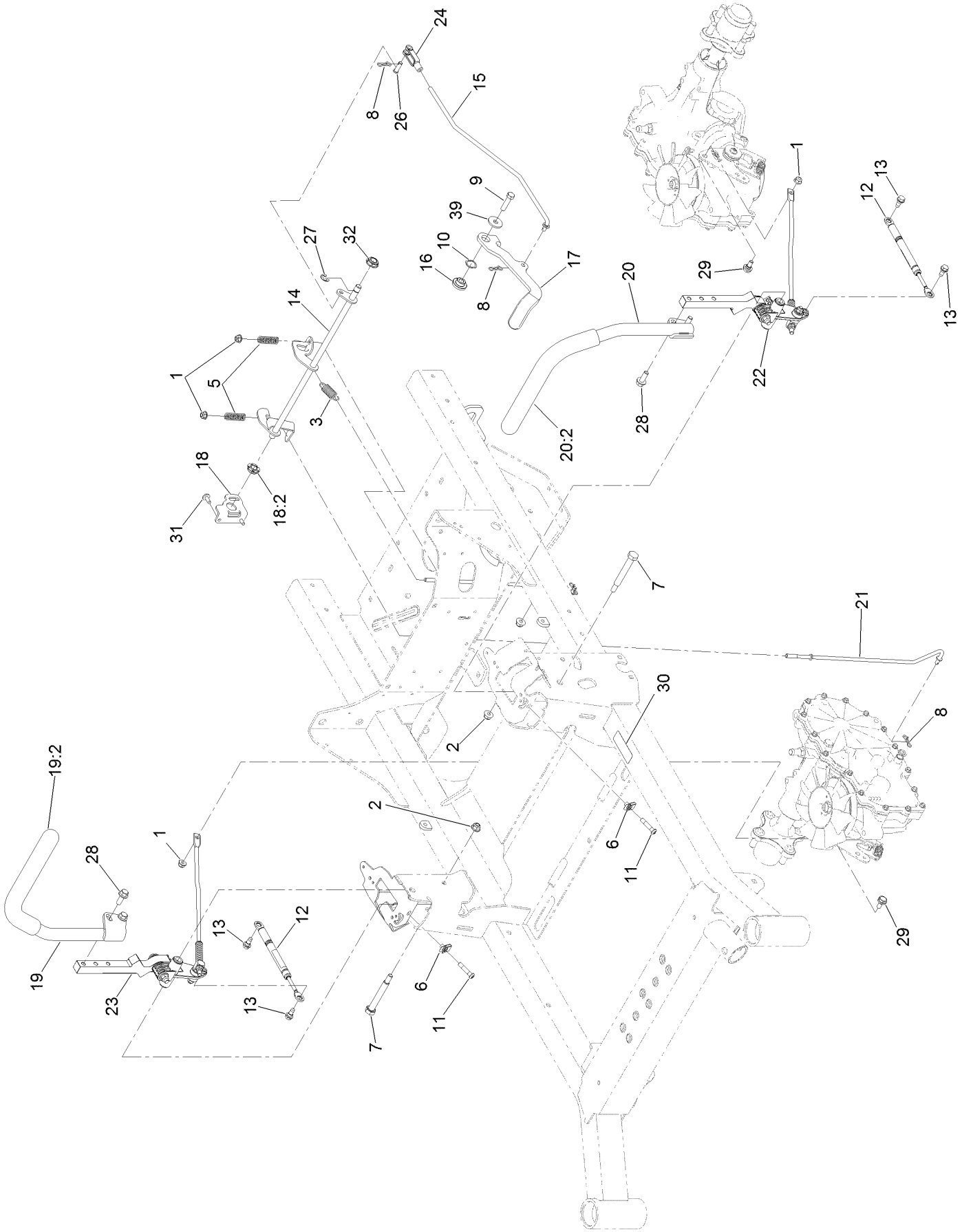

Motion Control Assembly (continued)

Ref.	Part Number	Qty.	Description
1	104-8300	4	Nut-HF, NI
2	104-8301	3	Nut-HF, NI
3	107-1045	2	Spring-Extension
5	109-7694	2	Spring-Compression
6	112-3306	2	Nut
7	115-5099	2	Bolt-Pivot
8	119-1415	4	Pin-Cotter, Locking
9	323-8	1	Screw-HH
10	119-4164	1	Washer-Wave
11	126-4299	2	Screw-HSBH
12	126-4322	2	Damper
13	126-4424	4	Screw-Shoulder
14	126-5813	1	Shaft-Brake
15	126-5819	1	Linkage-Brake, Upper
16	126-5989	1	Pivot-Flange
17	126-9490	1	Lever-Brake (With Grip)
18	126-6456	1	Bracket-Brake
18:2	126-5820	1	Bearing-Spherical
19	126-9191	1	RH Control Handle ASM
19:2	126-7359	1	Grip
20	126-9192	1	LH Control Handle ASM
20:2	126-7359	1	Grip
21	126-7217	2	Linkage-Brake, Lower
22		1	LH Motion Control ASM ●
23		1	RH Motion Control ASM ●
24	1-303105	1	Yoke-Adjustable
26	1-808280	1	Pin-Clevis
27	32120-47	1	Ring-Retaining, External
28	3234-42	4	Screw-HHF
29	37-8771	2	Bolt-Shoulder, HF
30	115-9625	1	Decal-Brake, Parking
31	126-6266	2	Screw-Tph
32	126-5820	1	Bearing-Spherical
39	2844	1	Washer

● Not serviced separately

LH Motion Control Assembly

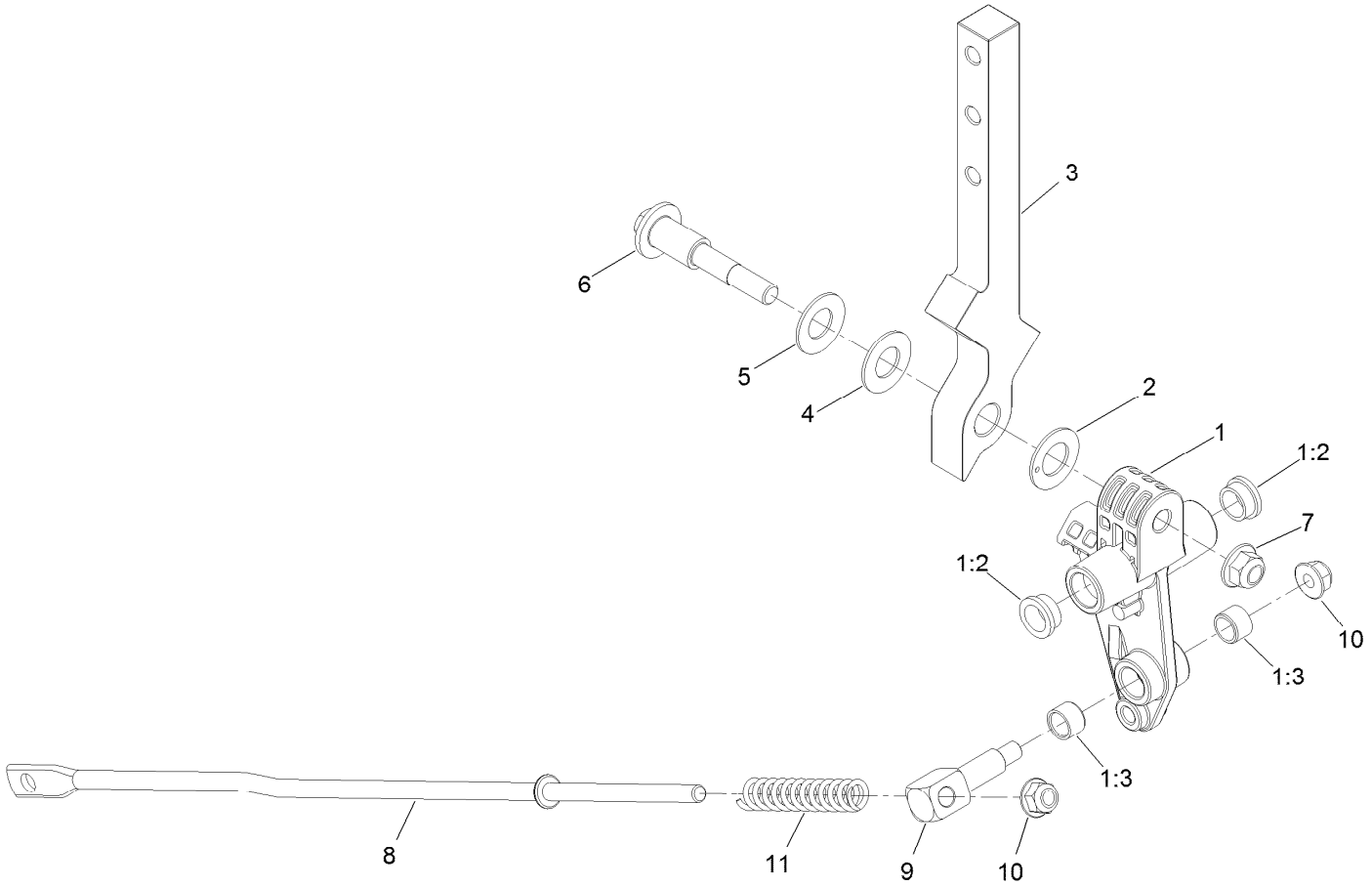

LH Motion Control Assembly (continued)

Ref.	Part Number	Qty.	Description
1	126-3773	1	Control Arm ASM
1:2	126-8909	2	Bushing
1:3	1-413152	2	Bushing-Sleeve
2	126-7296	1	Washer-Friction
3	126-8182	1	Arm-Control
4	117-1240	1	Washer
5	119-8925	1	Washer-Belleville
6	117-1198	1	Bolt-Pivot
7	104-8301	1	Nut-HF, NI
8	126-5435	1	Link-Control
9	126-5434	1	Swivel
10	104-8300	2	Nut-HF, NI
11	126-8195	1	Spring-Return, Neutral

RH Motion Control Assembly

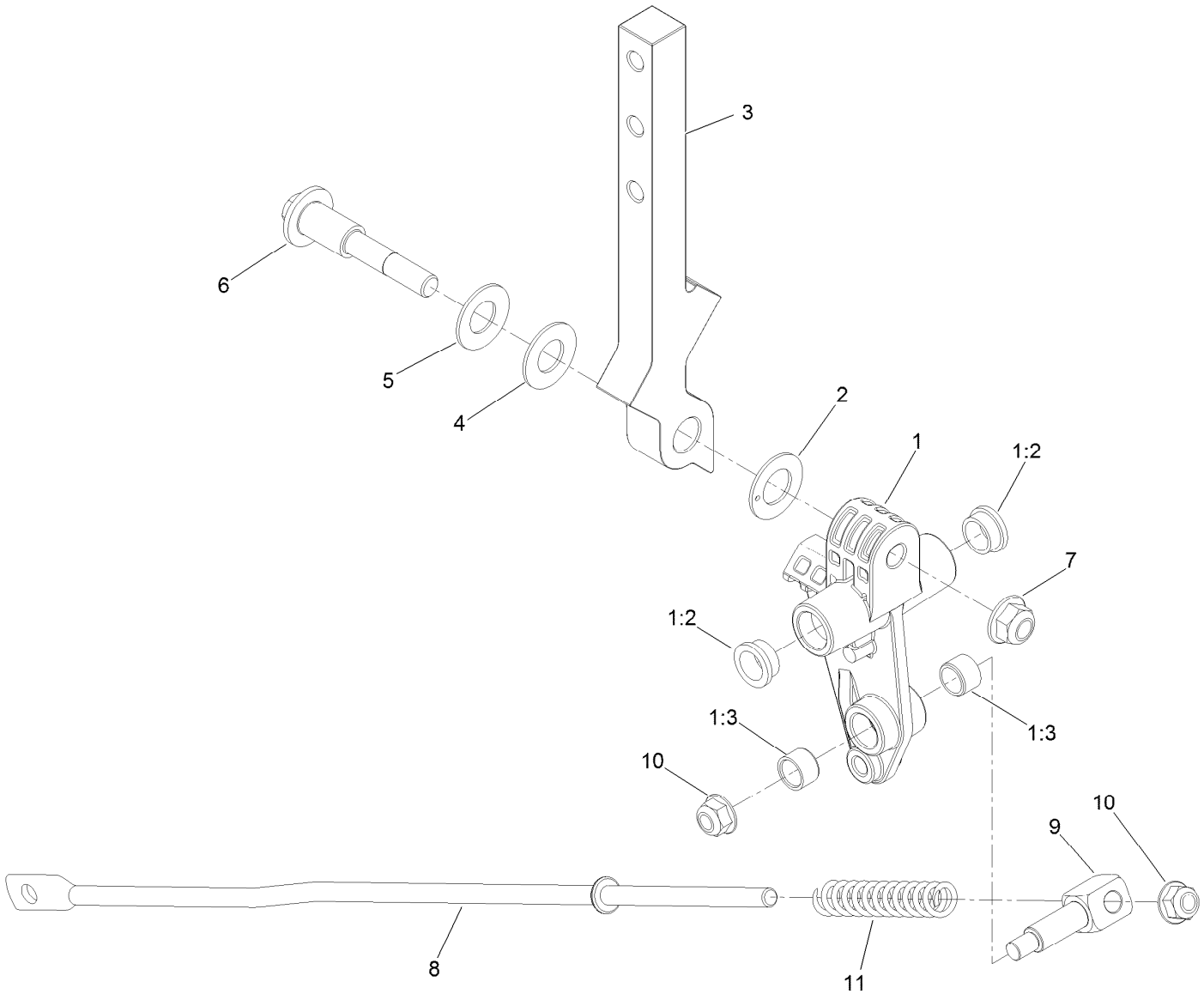

RH Motion Control Assembly (continued)

Ref.	Part Number	Qty.	Description
1	126-3773	1	Control Arm ASM
1:2	126-8909	2	Bushing
1:3	1-413152	2	Bushing-Sleeve
2	126-7296	1	Washer-Friction
3	126-8182	1	Arm-Control
4	117-1240	1	Washer
5	119-8925	1	Washer-Belleville
6	117-1198	1	Bolt-Pivot
7	104-8301	1	Nut-HF, NI
8	126-5435	1	Link-Control
9	126-5434	1	Swivel
10	104-8300	2	Nut-HF, NI
11	126-8195	1	Spring-Return, Neutral

Electrical System Assembly

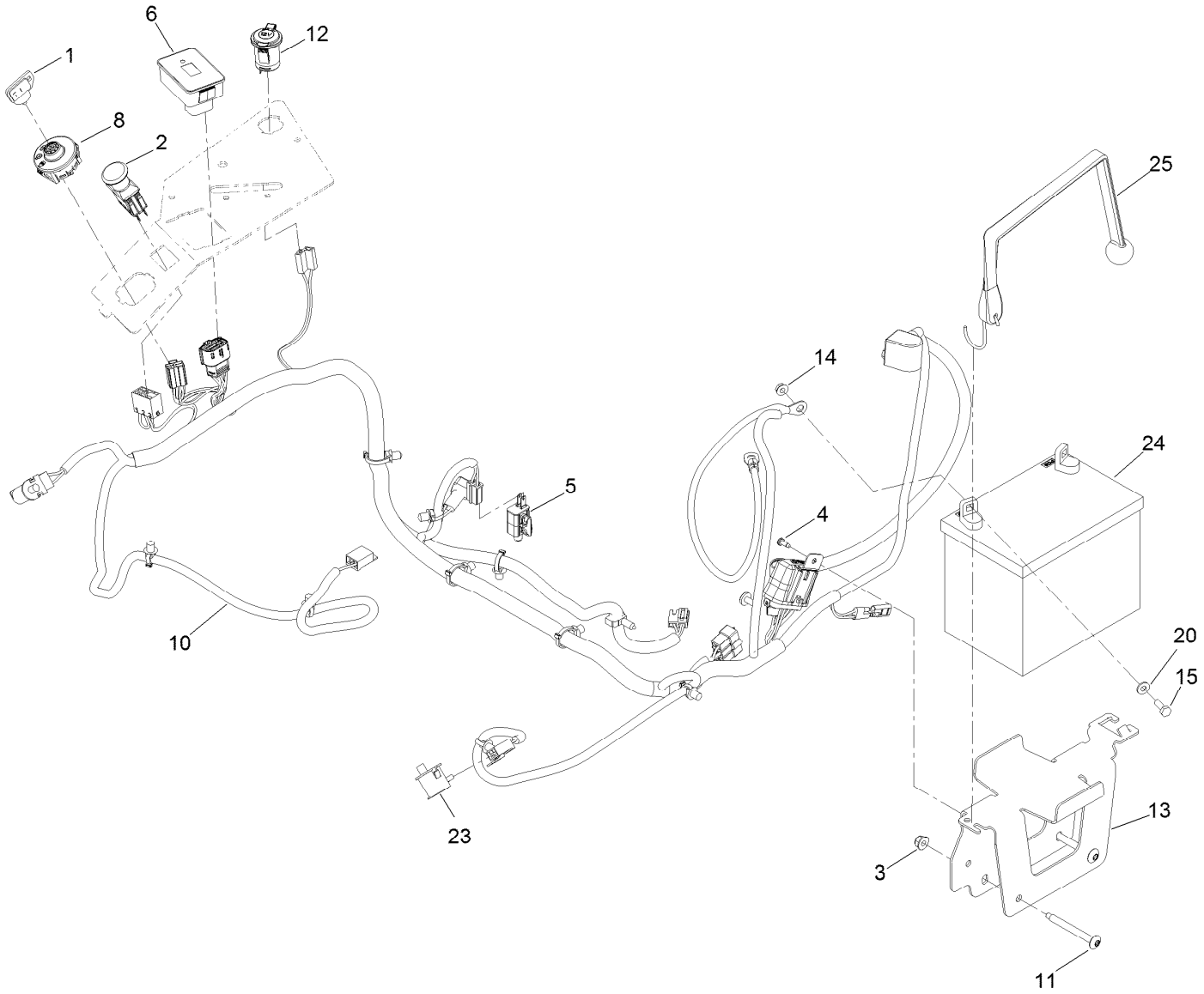

Electrical System Assembly (continued)

Ref.	Part Number	Qty.	Description
1	63-8360	1	Key-Ignition
2	103-5221	1	Switch-PTO
3	104-8300	2	Nut-HF, NI
4	105-6849	1	Screw-Forming, Thread
5	110-6765	1	Switch
6	116-5609	1	Module ASM
8	117-2221	1	Switch-Ignition
10	126-5803	1	Harness-Wire ▲
11	126-6267	2	Screw-Torx
12	126-6499	1	Port-Power, 12V
13	126-6725-03	1	Tray-Battery
14	32128-33	2	Nut-HF
15	321-4	2	Screw-HH
20	3256-22	2	Washer-Flat
23	82-2190	2	Switch-Bail
24		1	Battery (300 CCA, Wet) ●■
25	126-7627	1	Strap-Bungee

● Obtain locally.
■ Not serviced separately
▲ Use dielectric grease on all unsealed connectors and terminals only. Do not apply in sealed connectors.

Wire Harness Assembly No. 126-5803

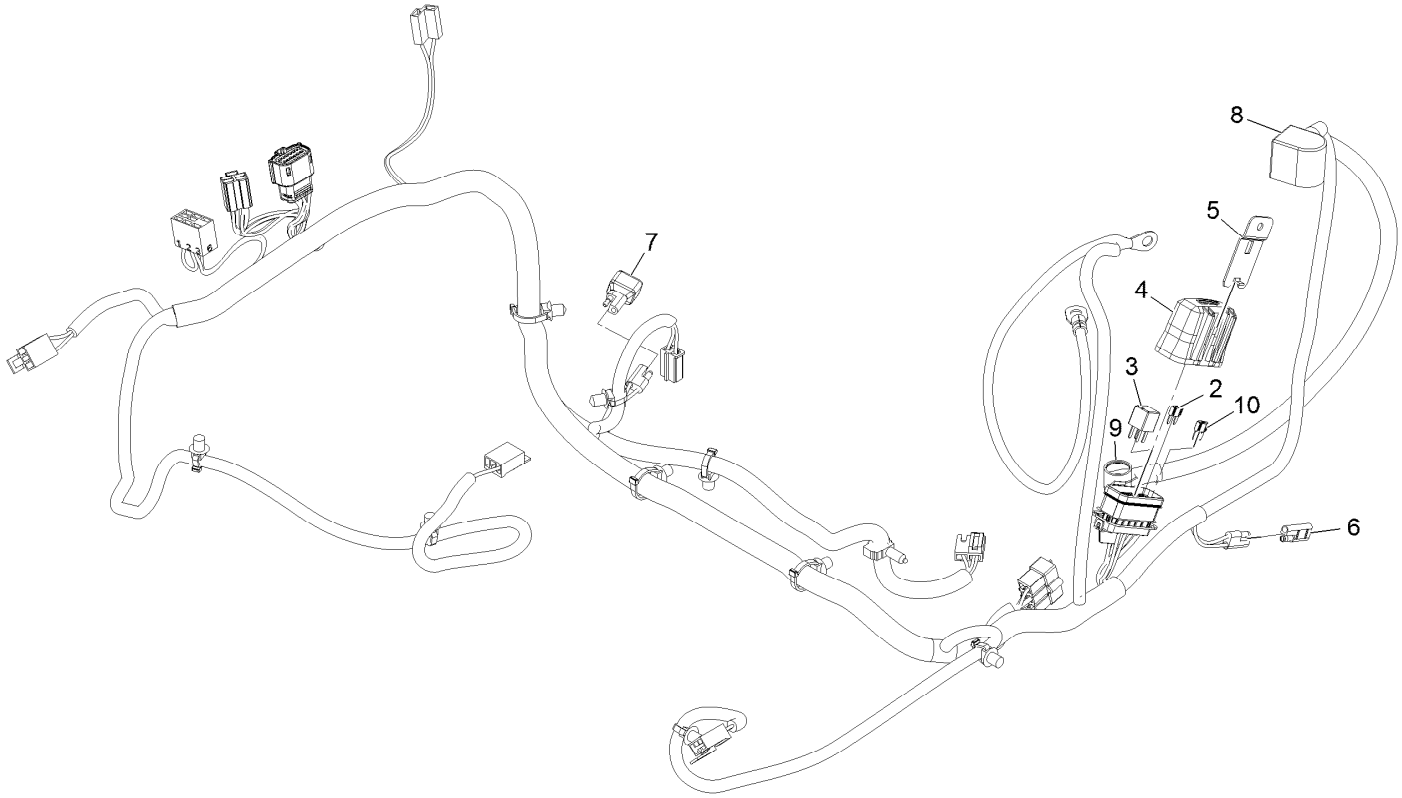

Wire Harness Assembly No. 126-5803 (continued)

Ref.	Part Number	Qty.	Description
2	121-8868	1	Fuse-Mini Blade, 20 Amp
3	126-3991	1	Relay-Micro
4	32180-176	1	Cover-Block, Fuse
5	32180-177	1	Clip-Mounting
6	116-0053	1	Cap-Plug
7	103-3895	1	Diode
8	126-8876	1	Insulator-Battery
9	1-543393	1	Insulator-Solenoid
10	121-8867	1	Fuse-Mini Blade, 15 Amp

Deck Lift Assembly

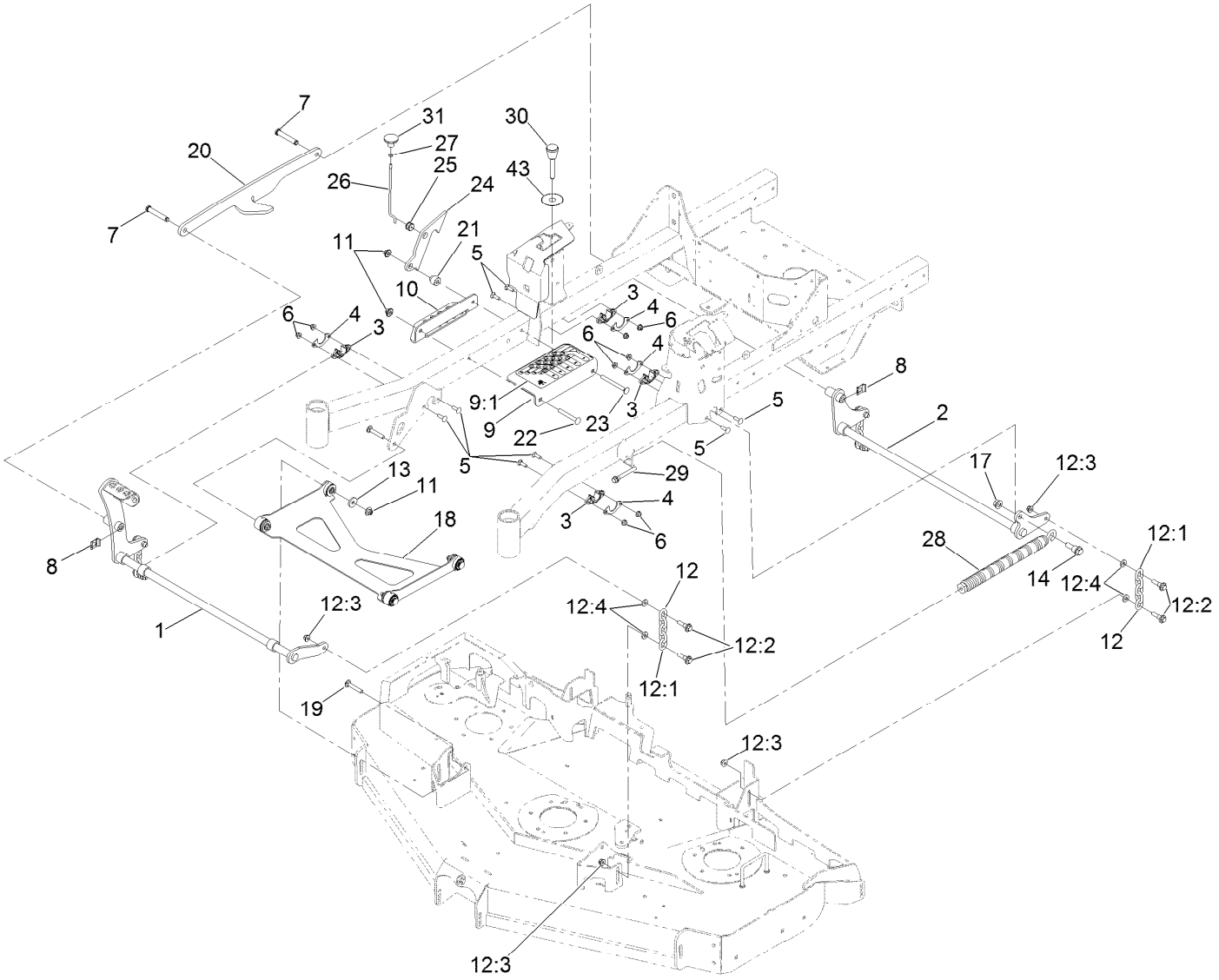

Deck Lift Assembly (continued)

Ref.	Part Number	Qty.	Description
1	126-3342-03	1	Shaft-Lift, Deck
2	126-3343-03	1	Shaft-Lift, Deck (Rear)
3	115-5065	4	Bushing-Flange
4	116-2887	4	Gusset-Lift, Deck
5	3230-22	8	Screw-CARR
6	104-8300	8	Nut-HF, NI
7	126-9181	2	Pin-Clevis
8	95-4064	2	Clip-Pin
9	126-4535	1	Bracket ASM
9:1	126-4784	1	Decal-HOC
10	126-4640-03	1	Angle-HOC, Lower
11	109-6658	4	Nut-Flange, NI
12	126-8877	4	Deck Chain ASM
12:1	1-633447	1	Chain-Lift, Deck
12:2	130-0742	2	Bolt-Shoulder
12:3	104-8301	2	Nut-HF, NI
12:4	43-0940	2	Spacer
13	1-373034	2	Washer

Ref.	Part Number	Qty.	Description
14	116-0780	1	Screw-Shoulder, HHF
17	99-5107	1	Nut-Lock
18	126-8365	1	Deck Strut ASM
19	3231-7	2	Screw-CARR
20	126-4639-03	1	Link-Lift
21	126-5221	1	Spacer-Stepped
22	3231-42	1	Screw-CARR
23	135-0313	1	Screw-CARR
24	126-5222	1	Plate-Lock, Transport
25	126-5593	1	Grommet
26	126-5223	1	Rod-Lock, Transport
27	3218-1	1	Nut-Jam
28	116-0886	1	Spring-Extension
29	92-7674	1	Bolt-Shoulder
30	126-5401	1	Pin-HOC
31	126-7019	1	Knob
43	126-8353	1	Tag-Retention, Magnetic

Deck Strut Assembly No. 126-8365

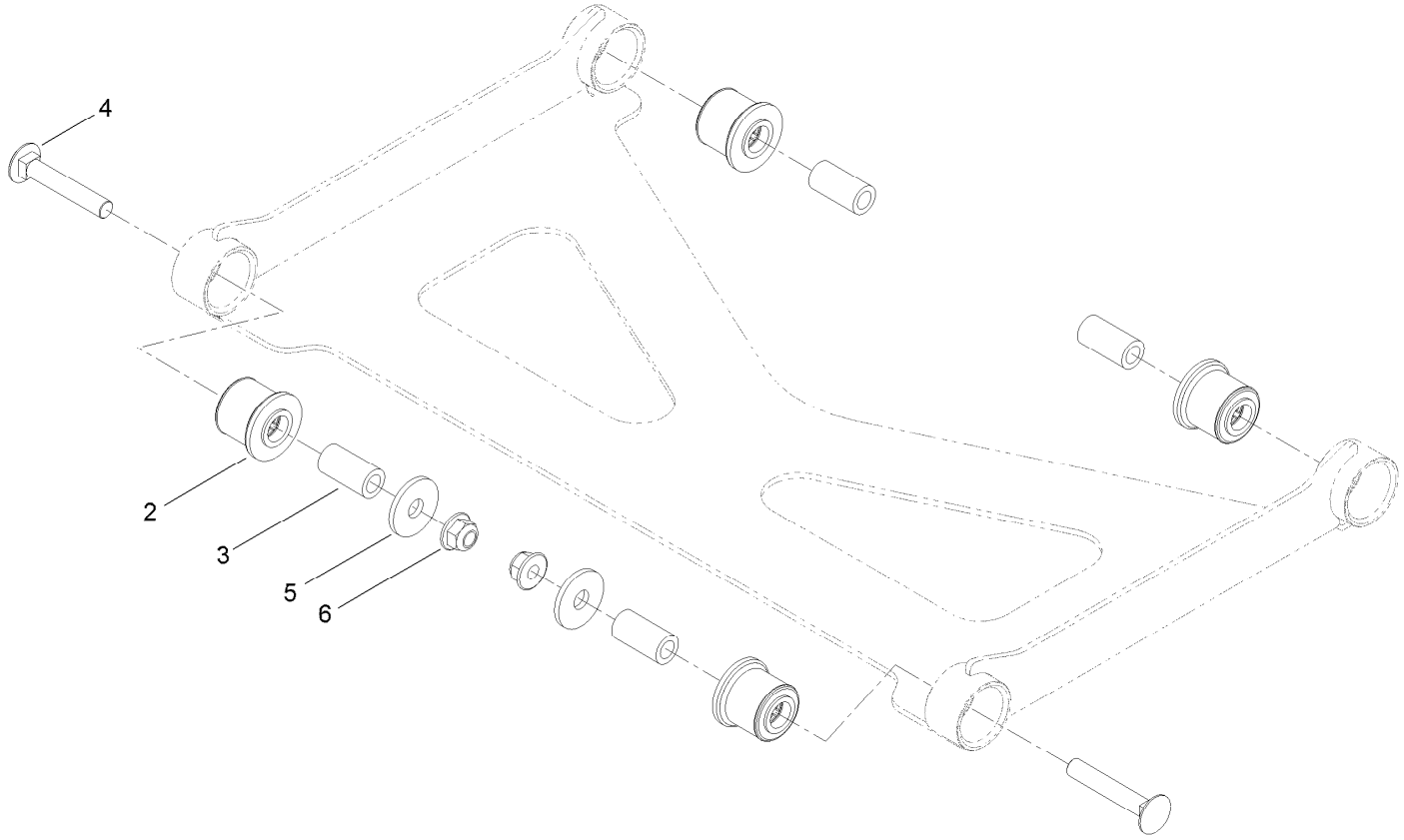

Deck Strut Assembly No. 126-8365 (continued)

Ref.	Part Number	Qty.	Description
2	126-8360	4	Bushing-Rubber, Suspension
3	108-6544	4	Spacer
4	3231-7	2	Screw-CARR
5	2844	2	Washer
6	104-8301	2	Nut-HF, NI

Engine Assembly

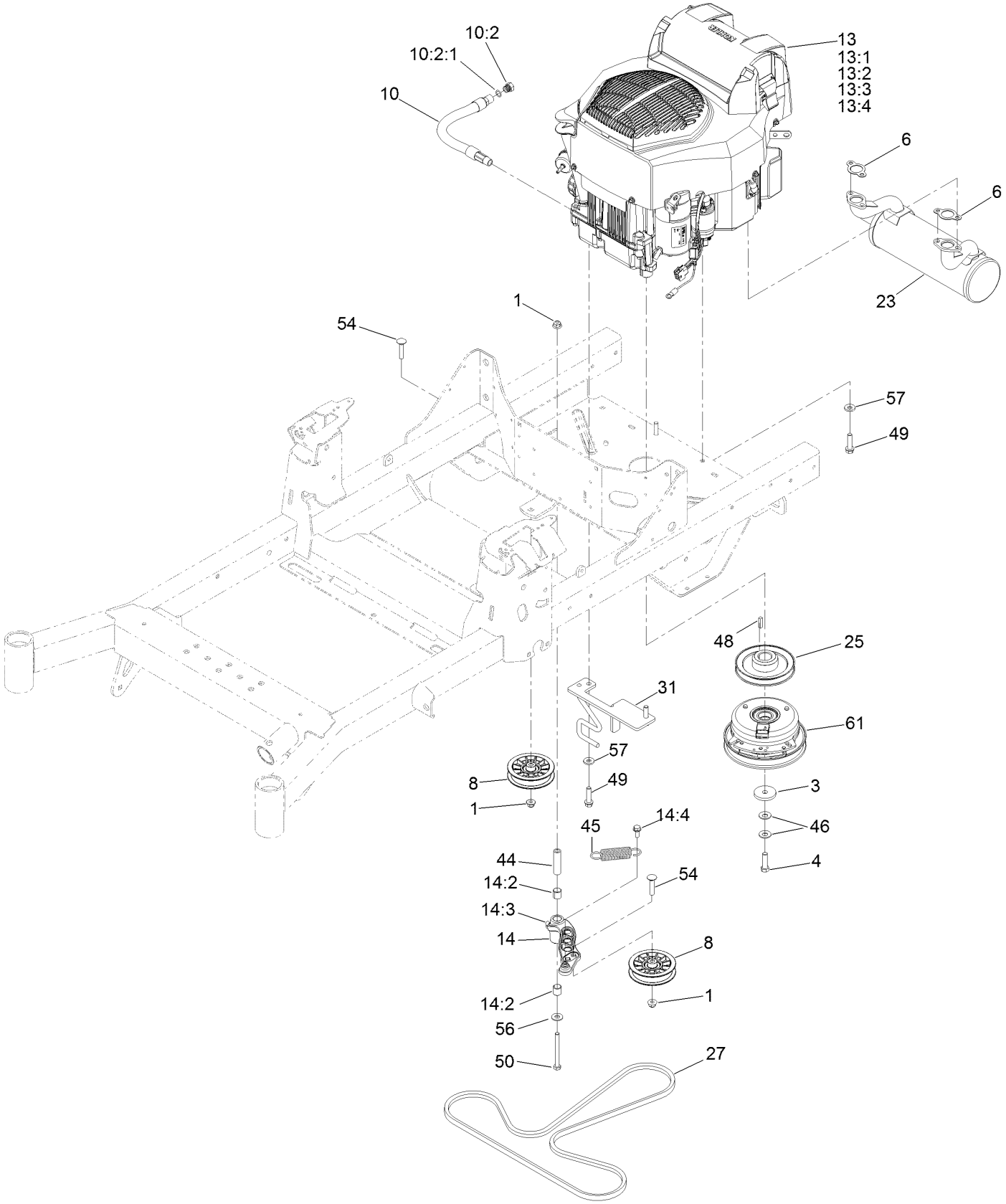

Engine Assembly (continued)

Ref.	Part Number	Qty.	Description
1	104-8301	3	Nut-HF, NI
3	109-6919	1	Washer-Clutch
4	109-9761	1	Screw-HH ❍
6	1-653291	2	Gasket-Exhaust
8	116-2456	2	Pulley-Flat Idler
10	116-5108	1	Oil Drain Hose ASM ■
10:2	353-508	1	Plug-HH ●
10:2:1	237-42	1	O-Ring
13		1	Engine-Kohler, Zt740 ▲◆
13:1		1	Kohler 16 083 01-S Engine Air Filter ▲❑
13:2		1	Kohler 52 050 02-S Engine Oil Filter ▲❑
13:3		1	Kohler 24 050 13-S Fuel Filter ▲❑
13:4		1	Kohler 25 083 04-S Safety Filter ▲❑
14	126-0973	1	Idler Arm ASM

Ref.	Part Number	Qty.	Description
14:2	1-513034	2	Sleeve-Bearing
14:3	302-40	1	Fitting-Grease, 90 DEG
14:4	32144-11	1	Screw-HWH
23	126-4359	1	Muffler-Kohler Aes
25	126-5358	1	Sheave (W/Hub)
27	126-5993	1	Belt-V
31	126-6688-03	1	Anchor-Clutch
44	1-603384	1	Bushing-Pivot, Idler
45	1-603402	1	Spring-Extension
46	1-603610	2	Washer-Spring
48	1-807259	1	Key
49	32144-102	4	Screw-HWH
50	323-15	1	Screw-HH
54	3231-29	2	Screw-CARR
56	3256-4	1	Washer-Flat
57	98-5975	4	Washer-Belleville
61	126-8926	1	Clutch

● Torque to 24-26 ft-lb
▲ Not serviced separately
❑ Obtain parts from www.kohlerplus.com
❍ Use Pro-Lock, Nut Type (P/N 1-840022, .5ml tube) on threads.
■ Torque to 17-23 ft-lb
◆ Obtain parts from www.kawpower.com

Deck Assembly

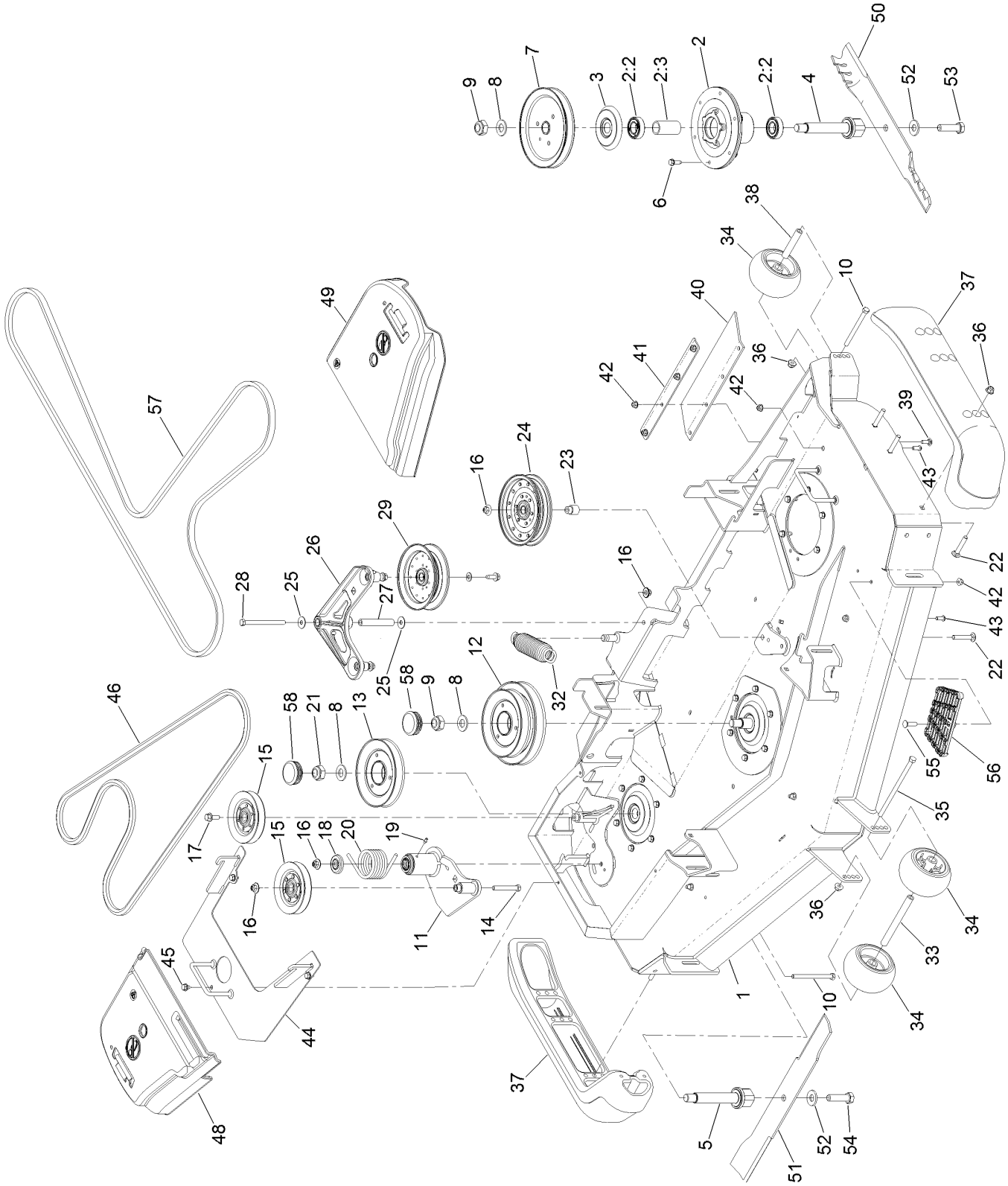

Deck Assembly (continued)

Ref.	Part Number	Qty.	Description
1	126-8924	1	Deck Decal ASM
2	120-5477	3	Spindle ASM
2:2	116-0720	2	Bearing-Ball
2:3	115-2641	1	Spacer-Bearing
3	117-7210	3	Shield-Bearing
4	133-2126	2	Shaft-Spindle
5	126-8143	1	Shaft-Spindle, LH Thread
6	701243	18	Screw-Thd Roll, HWH
7	120-7856	1	Pulley B Section
8	92-5836	3	Washer
9	3296-67	2	Nut-Lock, NI
10	323-23	3	Screw-HH
11	126-0853	1	Idler ASM
12	126-4800	1	Sheave-Double
13	126-4801	1	Sheave
14	323-13	1	Screw-HH
15	126-1478	2	Sheave
16	109-6658	4	Nut-Flange, NI
17	3234-11	1	Screw-HHF
18	103-2916	1	Guard-Top
19	302-19	1	Fitting-Grease
20	108-1921	1	Spring-Torsion
21	125-9325	1	Nut-Lock,NI Left Hand Thread
22	3231-7	7	Screw-CARR
23	1-633456	1	Bushing, Idler
24	116-4670	1	Pulley-Idler, Flat
25	52-2860	2	Washer
26	126-0976	1	Idler Arm ASM
27	116-5111	1	Bushing
28	323-38	1	Screw-HH
29	116-4668	1	Idler-Pulley, Flanged
32	116-6317	1	Spring-Extension
33	98-5967	1	Spacer-Wheel
34	1-603299	4	Roller-Scalp, Anti
35	108-5388	1	Screw-HH
36	104-8301	9	Nut-HF, NI
37	112-1479	2	Skid-Bumper, Deck
38	98-7912	2	Tube-Spanner
39	3230-16	8	Screw-CARR
40	116-8191	2	Guard-Tire
41	126-0413-01	2	Support-Outer Flap
42	104-8300	15	Nut-HF, NI
43	3274-55	6	Screw-HSBH
44	126-5116-01	1	Cover-Drive, Reverse
45	9266934	3	Screw
46	116-8187	1	Belt
48	116-0094	1	Cover-Belt, RH
49	126-1989	1	Cover-Belt, LH
50	133-2157	2	Blade-Rotary, Atomic 20.5
51	126-8142-01	1	Blade-Rotary, 20.5 Low Flow (Counter Rotation)
52	125-1736	3	Washer-Belleville
53	51-4060	2	Screw-Blade
54	125-9326	1	Screw-Blade, LH
55	3230-3	1	Screw-CARR
56	126-4781-03	1	Step-Deck
57	126-6628	1	Belt-V
58	126-8204	2	Caplug-Round

Deck Decal Assembly No. 126-8924

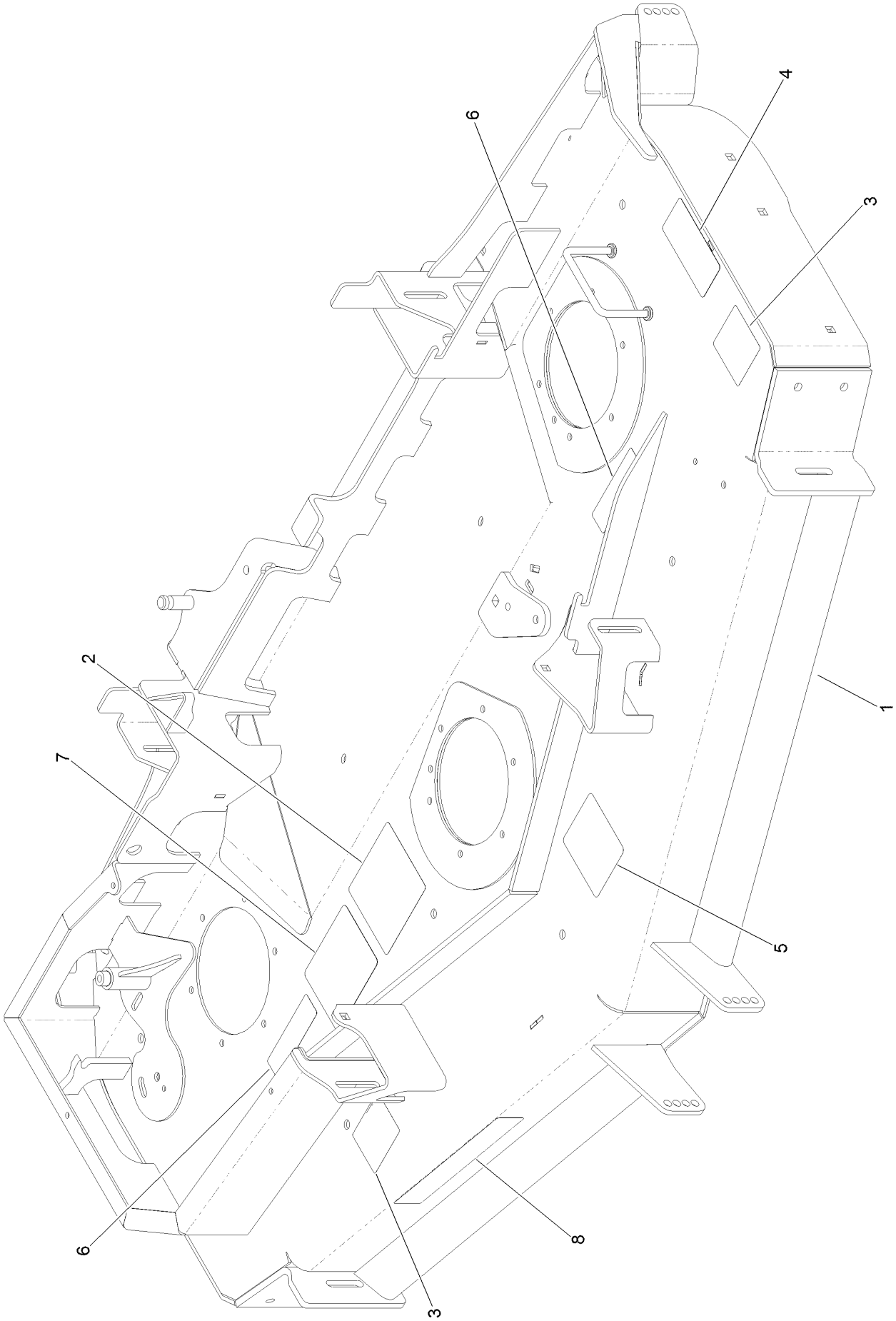

Deck Decal Assembly No. 126-8924 (continued)

Ref.	Part Number	Qty.	Description
1		1	Deck Decal ASM ●
2	126-0768	1	Decal-Routing, Belt
3	126-6599	2	Decal-Danger
4	93-7818	1	Decal-Torque, Blade Bolt
5	109-6036	1	Decal-Roller, Anti-Scalp
6	112-9028	2	Decal-Cover, Missing
7	127-6662	1	Decal-Spindle, Counter Rotating
8	121-3206	1	Decal

● Not serviced separately

Idler Assembly No. 126-0853

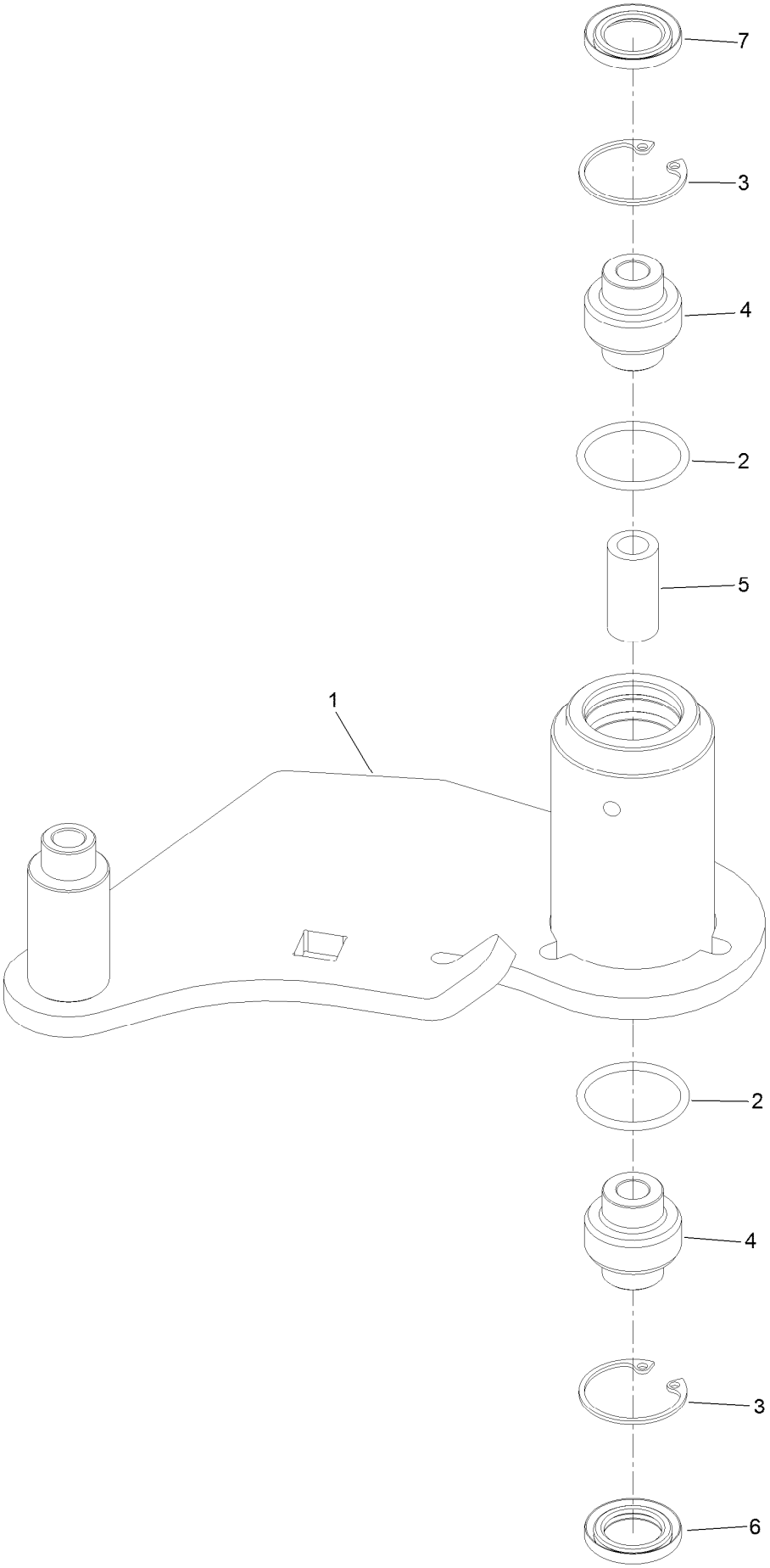

Idler Assembly No. 126-0853 (continued)

Ref.	Part Number	Qty.	Description
1		1	Idler-Deck ●
2	106-7159	2	O-Ring
3	32120-10	2	Ring-Snap
4	103-3504	2	Bearing-Spherical
5	108-6544	1	Spacer
6	103-3505	1	Seal-Lip, Double
7	103-3506	1	Seal-Lip, Single

● Not serviced separately

Idler Arm Assembly No. 126-0976

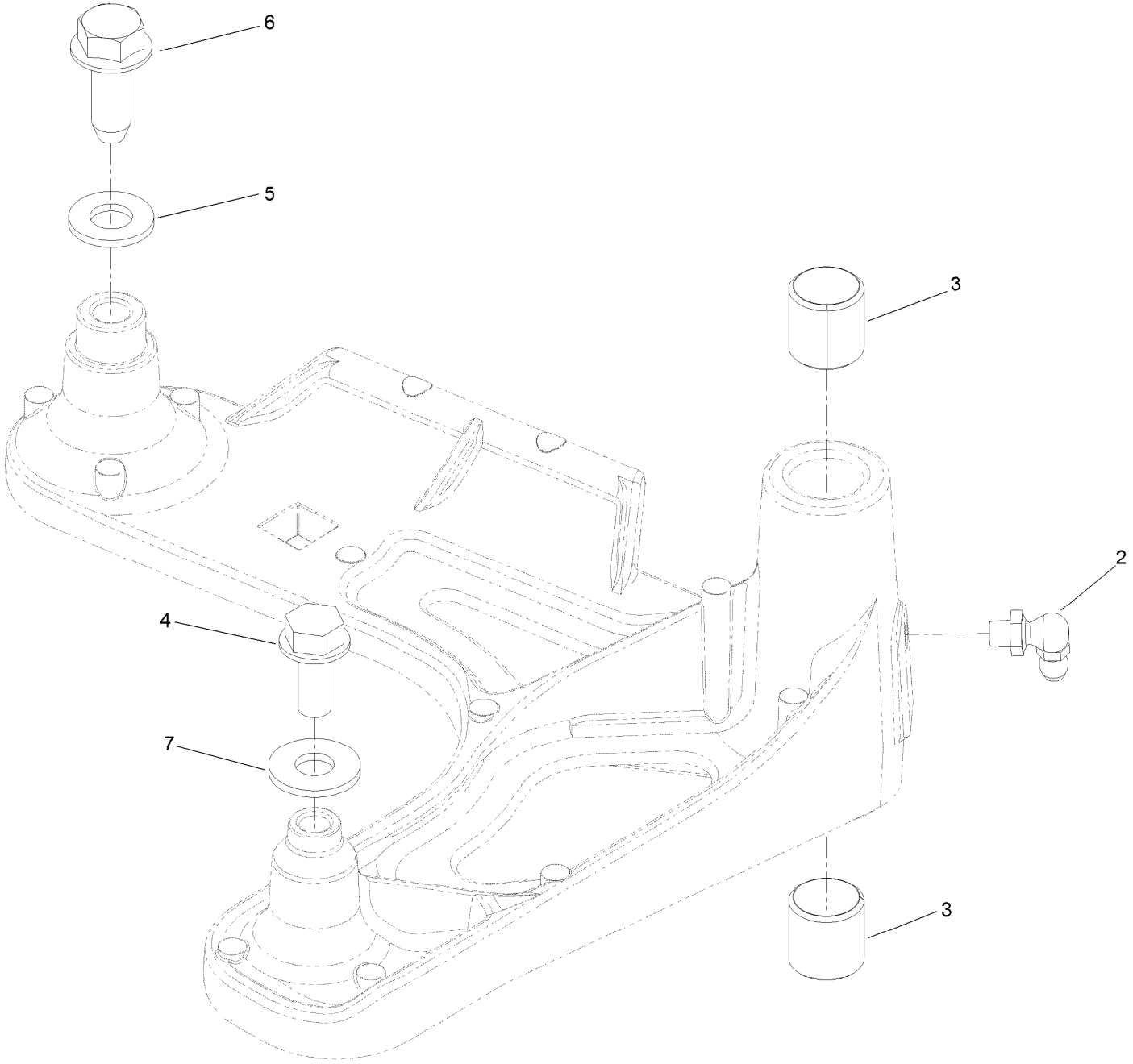

Idler Arm Assembly No. 126-0976 (continued)

Ref.	Part Number	Qty.	Description
2	302-40	1	Fitting-Grease, 90 DEG
3	1-513034	2	Sleeve-Bearing
4	32144-11	1	Screw-HWH
5	3256-24	1	Washer-Flat
6	126-1696	1	Screw-Forming, Thread
7	3256-3	1	Washer-Flat

Attachments and Accessories

For 74463 TITAN HD 2000 Series Riding Mower with 60in Rear-Discharge Deck

Product Name	Model/Part
Finish Cut Kit	116-8547
Toro Hydro Kit	121-3783
LED Light Kit	126-5382
Front Bucket Bracket Kit	126-7011
Sunshade Kit	126-8077
Trash Container Kit	126-8379
Weight Caster Kit	126-8639
Flat Free Wheel and Bearing Kit	126-9368
Jack Kit	127-6666
5 Gallon Bucket	133-2533
Bucket Mount Kit	136-1654
Universal Mount Kit	136-1664
Mount Kit	136-1665
Trimmer Mount Kit	136-1682
Toro Deluxe Rider Cover	490-7319

Notes:

TORO®

Count on it.