FORM NO. 3326–327

Comb and Scraper Kit

For Reelmaster ® 5500 & 6000 Series Cutting Unit

Part No. 104–1845

Installation Instructions

1. Place mower on a level surface.
2. Remove capscrew and flange nut securing each end of front roller to roller brackets. Discard capscrews and flange nuts.
3. Thread a flange nut onto each capscrew as shown in figure.

Note: Comb/scraper assembly is loosely assembled at the factory. Do not tighten locknuts at this time.

4. Mount each end of comb bracket to top of each roller bracket with a flange nut and capscrew as shown in figure.

Note: If scraper is not required, remove it from assembly and insert (2) washers, positioning on each end as shown in figure. Washers are shipped loose.

5. Make sure roller and comb assembly are secure and centered in roller brackets, then tighten flange nuts on capscrews.
6. Using a gauge bar and ruler, set comb aggressiveness to meet your turf conditions. Secure locknuts

- Recommended height of cut range is 0.375” to 0.75”.
- Less aggressive setting = Height of Cut Setting
- More aggressive setting = 1/8” Below Height of Cut Setting

Note: It may require a few weeks of operation to remove excess grain in turf.

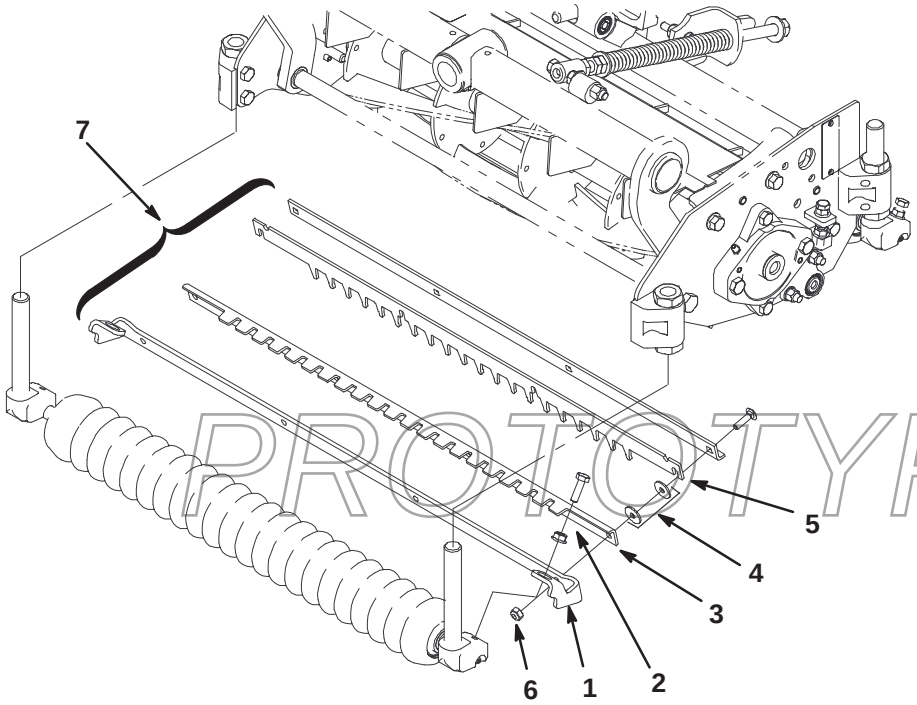

PROTOTYPE

Figure 1

1. Comb bracket
2. Capscrew & flange nut
3. Scraper
4. Washers (if required)
5. Comb
6. Locknuts
7. Comb & scraper assembly

©The Toro Company – 2001
All Rights Reserved

PROTOTYPE