Form No. 3326-329

Dethatcher Kit

Reelmaster® 5500-D/6000-D Series Attachment

Model No. 03872—Serial No. 220000001 and Up

PROTOTYPE

Operator’s Manual

Contents

	Page
Contents	2
Introduction	2
Safety	3
Safe Operating Practices	3
Safety and Instruction Decals	3
Specifications	4
Set–Up	4
Loose Parts	4
Setup	5
Leveling Front Roller	5
Adjusting the Blade Depth	5
Adjust Front and Rear Grass Shields	5
Adjusting the Roller Scrapers	6
Mount Dethatching Reel	6
Operation	7
Training Period	7
Operating Tips	7
Maintenance	8
Lubrication	8
Servicing Rollers	8
Removing Dethatching Reel	9
Removing Dethatching Blades From Shaft	9
Install Dethatching Blades	10
Assembling the Dethatcher Reel	10
The Toro General Commercial Products Warranty	12

Introduction

Read this manual carefully to learn how to operate and maintain your product properly. The information in this manual can help you and others avoid injury and product damage. Although Toro designs and produces safe products, you are responsible for operating the product properly and safely.

Whenever you need service, genuine Toro parts, or additional information, contact an Authorized Service Dealer or Toro Customer Service and have the model and serial numbers of your product ready. The model and serial numbers are located on the side plate.

Write the product model and serial numbers in the space below:

Model No. _____

Serial No. _____

This manual identifies potential hazards and has special safety messages that help you and others avoid personal injury and even death. ***Danger***, ***Warning***, and ***Caution*** are signal words used to identify the level of hazard. However, regardless of the hazard, be extremely careful.

Danger signals an extreme hazard that *will* cause serious injury or death if you do not follow the recommended precautions.

Warning signals a hazard that *may* cause serious injury or death if you do not follow the recommended precautions.

Caution signals a hazard that may cause minor or moderate injury if you do not follow the recommended precautions.

This manual uses two other words to highlight information. **Important** calls attention to special mechanical information and **Note:** emphasizes general information worthy of special attention.

PROTOTYPE

© 2001 by The Toro Company
8111 Lyndale Avenue South
Bloomington, MN 55420-1196

All Rights Reserved
Printed in the USA

Safety

Safe Operating Practices

- Read, understand, and follow all instructions in the traction unit operator's manual before operating the dethatching unit.
- Read, understand, and follow all instructions in this operator's manual before operating the dethatching unit.
- Never allow children to operate the dethatching units. Do not allow adults to operate traction unit or dethatching units without proper instruction. Only trained operators who have read this manual should operate the dethatching units.
- Never operate the dethatching units when under the influence of drugs or alcohol.
- Keep all shields and safety devices in place. If a shield, safety device or decal is illegible or damaged, repair or replace it before operation is commenced. Also tighten any loose nuts, bolts, and screws to ensure dethatching unit is in safe operating condition.
- Always wear substantial shoes. Do not operate dethatching units while wearing sandals, tennis shoes, sneakers or shorts. Also, do not wear loose fitting clothing which could get caught in moving parts. Always wear long pants and substantial shoes. Wearing safety glasses, safety shoes and a helmet is advisable and required by some local ordinances and insurance regulations.
- Remove all debris or other objects that might be picked up and thrown by the dethatching unit reel blades. Keep all bystanders away from the working area.
- If the dethatching blades strike a solid object or the unit vibrates abnormally, stop and shut the engine off. Check dethatching unit for damaged parts. Repair any damage before restarting and operating the dethatching unit.
- Lower the dethatching units to the ground and remove key from ignition switch whenever machine is left unattended.
- Be sure dethatching units are in safe operating condition by keeping nuts, bolts and screws tight.
- Remove key from ignition switch to prevent accidental starting of the engine when servicing, adjusting or storing the machine.
- Perform only those maintenance instructions described in this manual. If major repairs are ever needed or assistance is desired, contact an Authorized Toro Distributor.
- To ensure optimum performance and safety, always purchase genuine Toro replacement parts and accessories to keep the Toro all TORO. **Never use "will-fit" replacement parts and accessories made by other manufacturers.** Look for the Toro logo to assure genuineness. Using unapproved replacement parts and accessories could void the warranty of The Toro Company.

Safety and Instruction Decals

Safety decals and instructions are easily visible to the operator and are located near any area of potential danger. Replace any decal that is damaged or lost.



67-7960

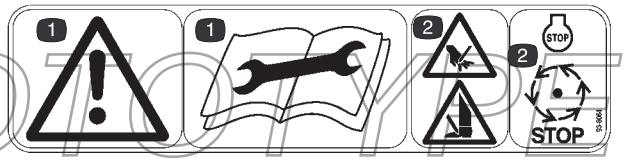

Part No. 93-6688 (for CE)

1. Danger—read and understand the operator's manual before performing any maintenance.
2. Cutting hazard of hands or feet—stop the engine before approaching reel area.

PROTOTYPE

Specifications

Reel construction	Blades and spacers bolted to square shaft
Dethatching range	Up to 1/4 in. deep blade penetration
Reel diameter	7–1/4 in.
Power	Hydraulic motor splined to reel shaft
Reel bearings	Self aligning, roller ball type with cast housing and eccentric collar lock with setscrew
Roller adjustment	Front-fixed, adjustable rear roller

Set–Up

Note: Determine the left and right sides of the machine from the normal operating position.

Loose Parts

Note: Use this chart as a checklist to ensure that all parts have been received. Without these parts, total setup cannot be completed.

Description	Qty.	Use
O–ring	1	For use with reel motor bearing housing
CE Decal	1	Affix to cutting unit for CE.
Operator’s manual	1	Read before operating.
Parts catalog	1	
Registration Card	1	Fill out and return to Toro

PROTOTYPE

Setup

Note: Determine the left and right sides of the machine from the normal operating position.

Leveling Front Roller

Note: Front roller has been leveled at the factory.

1. Place the dethatching reel on a level surface.

Note: To raise rear roller off the ground, place a flat bar under the dethatching reel blades (Fig. 1). Be sure that the bar covers the full length of the dethatching reel blades.

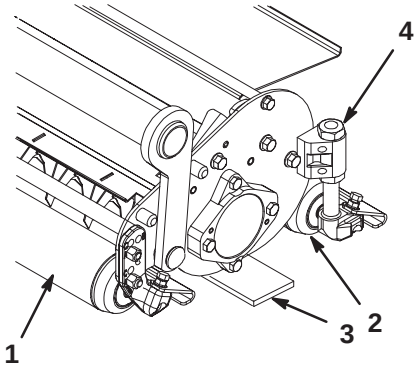

Figure 1

1. Front roller
2. Rear roller
3. Gauge bar
4. Adjusting knob

2. Rock dethatching reel on blades, so front roller touches level surface. If a gap between front roller and surface is greater than .010” (.25mm), proceed as follows:

- Loosen the lock nuts securing the front roller brackets to the side plates.
- Push rearward on the front roller until roller is level on surface, then, tighten the nuts. Do not turn the capscrews—doing so may alter the roller adjustment.

Adjusting the Blade Depth

Note: The maximum recommended setting is 1/4 in. (6 mm) deep blade penetration.

1. Place the dethatching reel on a level surface.

2. Place 2 gauge bars, which have the desired depth of blade penetration below the ground, under the front and rear rollers of the dethatching reel (on each end of the reel) (Fig. 2).

3. Turn the adjusting nut on each height-of-cut bracket (Fig. 2) so that the reel blades come in contact with the level surface on both ends.

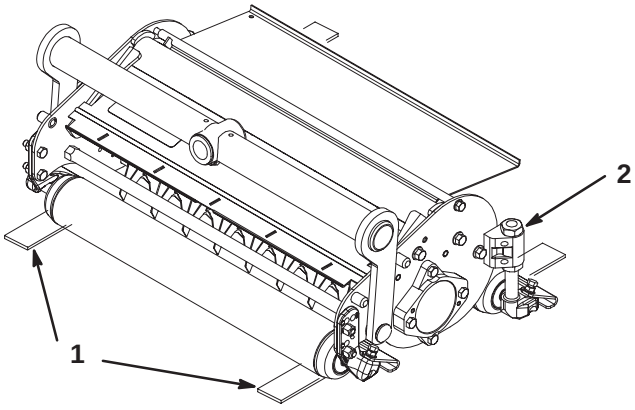

Figure 2

1. Gauge bar (1/4”)
2. Adjusting nut

Note: As the dethatching blades wear, the diameter of the reel will decrease and the depth setting will change. Check height setting periodically to insure desired setting is achieved.

Adjust Front and Rear Grass Shields

Note: When operating in turf conditions where much debris is encountered, or unusually heavy thatch, open the front and rear discharge shields to help allow the debris to discharge from the reel.

1. Loosen the capscrews on the pivot of the grass shield.

2. Rotate the grass shield to the desired setting and tighten the capscrew.

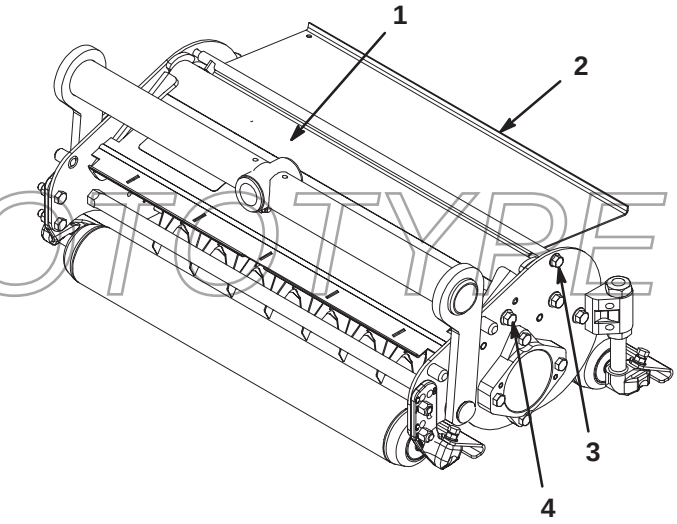

Figure 3

1. Front grass shield
2. Rear grass shield
3. Front capscrew
4. Rear capscrew

PROTOTYPE

Caution

Do not open rear shield so it is higher than level to ground

Thrown debris could cause personal injury

Adjusting the Roller Scrapers

1. Loosen flange nut securing roller scrapers (Fig. 4).

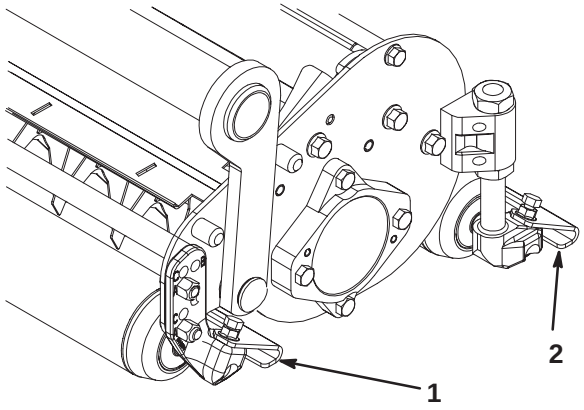

Figure 4

1. Front roller scraper
2. Rear roller scraper

2. Move scraper rods in or out to attain 0.0 to 0.03 in. (.0 to .75mm) clearance between the scraper and roller.

3. Ensure that the scraper rod is parallel to the roller and the level surface.

4. Tighten flange nuts to lock adjustment.

Mount Dethatching Reel

Important **When lowering dethatching reels, care must be taken to prevent damage to the reel blades due to contact with a concrete floor or a paved surface.**

The dethatcher units can be installed at any of the five or seven mounting locations on the traction unit. Figure 5 shows the orientation of the hydraulic drive motor for each of the locations. For any of the locations requiring the motor to be mounted on the right end of the dethatching unit, install a counterweight on the left end of the dethatching unit. For the locations requiring the motor to be mounted on the left end, install a counterweight on the right end of the dethatching unit.

Note: Dethatcher units do not use speed sensors. If traction unit is equipped with speed sensors, secure them to the lift arms with cable ties.

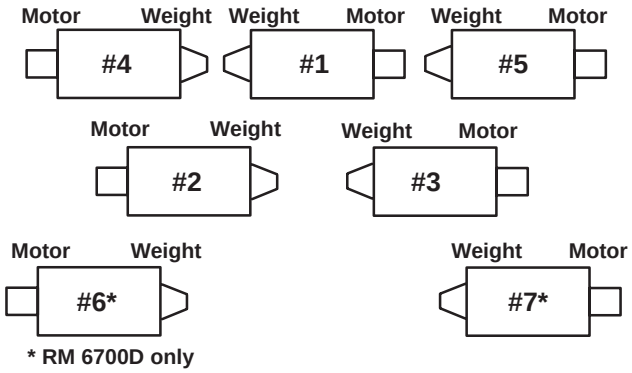

Figure 5

Note: Counterweights are shipped installed to the right end of the dethatching units. The capscrews on the left end are to be used for securing the hydraulic motor.

Dethatching reels are mounted to traction unit the same way cutting units are. Refer to Traction Unit Operator's Manual for mounting instructions.

PROTOTYPE

Operation

Training Period

Before operating the dethatching reels, evaluate the performance of the reel at the desired setting. Operate in a clear, unused area to determine if the desired results will be achieved. Adjust as desired.

Operating Tips

1. Operate the traction unit at full throttle, full reel speed (setting 11) and between 3–5 MPH (5–8 Km/h).
2. Maximum setting on the dethatching blades is 1/4" (6mm) deep penetration.
3. Power requirements to operate the dethatching reels will vary with turf and soil conditions. Travel speed may need to be reduced in some conditions.
4. When operating in turf conditions where much debris is encountered, or unusually heavy thatch, open the front and rear discharge shields to help allow the debris to discharge from the reel.

Caution

Do not open rear shield so it is higher than level to ground

Thrown debris could cause personal injury

PROTOTYPE

Maintenance

Lubrication

Each unit has (3) grease fittings that must be lubricated regularly with No. 2 General Purpose Lithium Base Grease.

1. The grease fitting locations and quantities are: reel bearings (2) and carrier frame (1).

Note: Reel bearings are located on reel side of each side plate.

Important Lubricating immediately after washing helps purge water out of bearings and increases bearing life.

2. Wipe each grease fitting with a clean rag.
3. Apply grease until clean grease is detected around bearing seal of reel and pivot pin.
4. Wipe excess grease away.

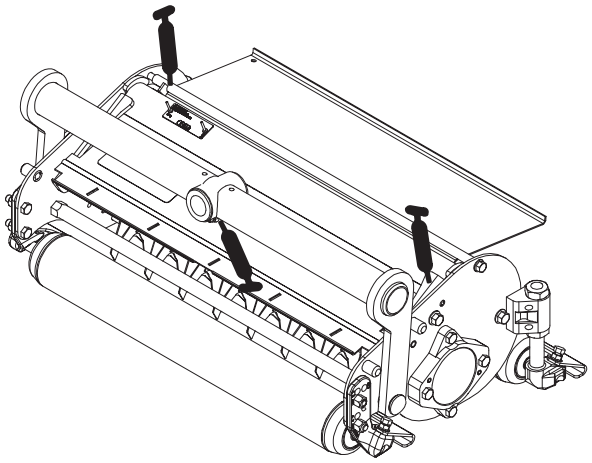

Figure 6

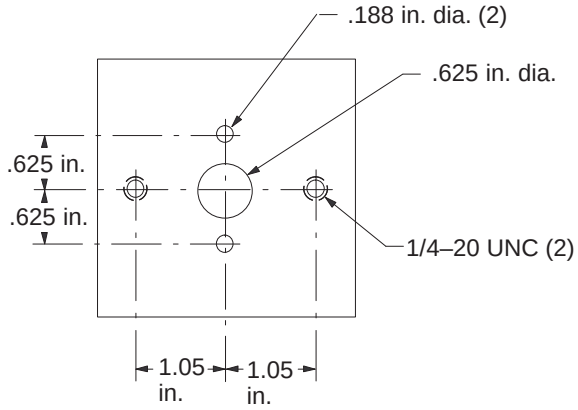

Figure 7

Servicing Rollers

Seal Removal

Using a 1/4 in. thick, 3 in. x 3 in. square piece of steel and the following specifications, make a seal removal tool (Fig. 7).

1. Slide seal tool over roller shaft.
2. Using the tool as a template, locate, mark, and drill 2 holes (7/64 in. [.109 in.] diameter) in outer face of seal.
3. Screw 2 self-tapping screws (No. 8 [.164 in.] x 3/4 in.) into outer face of seal.
4. Install 2 capscrews (1/4 x 1 in.) into seal tool.

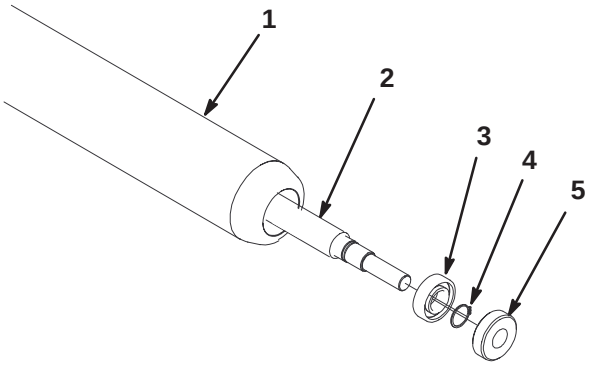

Figure 8

1. Roller
2. Roller shaft
3. Ball bearing
4. Snap ring
5. Grease seal

PROTOTYPE

5. Alternate tightening sequence of 1/4 in. capscrews to pull seal out of housing.

Note: Seal will be destroyed when servicing the rear roller. Do not attempt to re-use these seals.

Bearing Removal

Reference: The bearings are pressed on to the shaft (.0003–.0016 in. interference) and loose fit to housing (.0020–.0035 in. clearance).

1. Remove snap ring on each end of roller (Fig. 8).

2. Loosely secure roller assembly in bench vise and lightly tap one end of roller shaft until free from housing.

3. Remove second bearing from shaft. Support bearing on inner race and tap on roller shaft.

4. Inspect bearings, shaft, and snap ring for damage. Replace damaged components. Re-assemble roller.

Assembly

1. Press bearing onto one end of shaft. Apply pressure to inner race only.

2. Install snap ring on same end as assembled bearing.

3. Install shaft with single bearing into tube assembly.

4. Install second bearing into roller assembly. Press only on inner race. The inner race will contact shoulder of shaft before outer race contacts shoulder of housing.

5. Install second snap ring.

6. Fill 50% of new seal cavity with grease. (This will relube bearing and fill void)

7. Press new seal flush to .03 in. recessed into housing. Repeat for other side.

Removing Dethatching Reel

1. Remove (2) capscrews securing reel motor to bearing housing on drive end of dethatcher. Remove reel motor.

2. Remove the setscrews from the locking collars on the reel bearings.

3. With a drive pin and hammer, loosen the locking collars by driving the locking collar in direction opposite to normal rotation.

4. Remove (2) capscrews securing bearing housing to end of dethatcher and remove bearing housing.

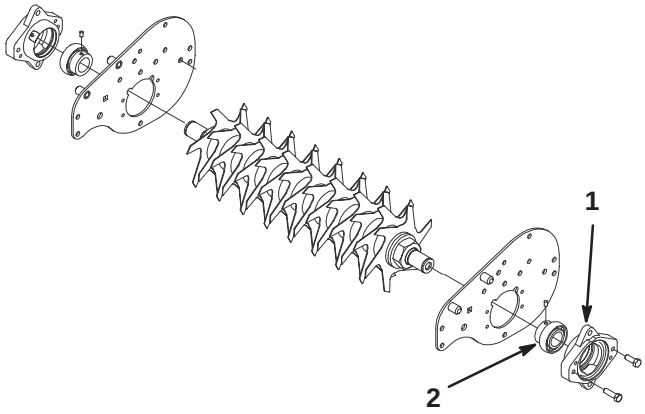

Figure 9

1. Bearing housing
2. Reel bearing / locking collar

Removing Dethatching Blades From Shaft

1. Secure the end of the dethatching shaft, which has only one washer and nut, in a vise.

2. On other end of shaft, rotate nut counter–clockwise. Remove nut.

Caution

The blades are extremely sharp and may have burrs that will cut your hands.

Use caution when removing the blades from the shaft.

3. Remove small spacer, washer, blades and large spacers. Clean and lubricate square shaft with a light coating of grease to simplify assembly.

Important **Do not invert dethatching reel blades. The order of disassembly is extremely important. Do not invert dethatching reel blades when disassembling or reverse the order when assembling. Note the dethatching blades index hole. The index hole is provided for assembly in order to obtain the proper helix for the dethatching reel.**

PROTOTYPE

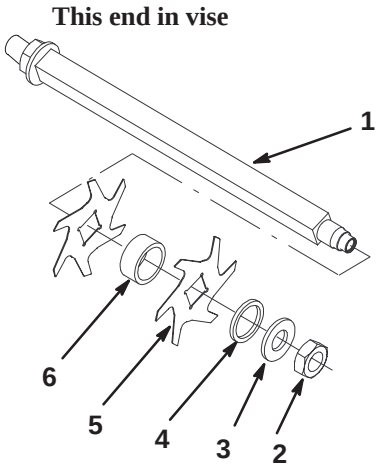

Figure 10

1. Shaft
2. Nut
3. Washer
4. Small spacer
5. Blade (16)
6. Large spacer (15)

Install Dethatching Blades

1. First, assemble a reel blade (Fig. 11).

2. Next, assemble a large spacer.

3. Do not invert reel blades when reassembling on reel shaft. If the blades are inverted, the blades that are in use, (rounded) will be mixed with the sharp ends of the blades which were not in use. This will cause unsatisfactory performance in the dethatching reel unit. Attention should always be taken when disassembling dethatching blades from reel.

4. Install the next blade clockwise so the index reference hole is not aligned with the first blade hole by one flat of the shaft. Continue to install spacers and blades in this manner until the full complement of blades have been installed. When properly assembled, the blades will be staggered in such a manner to give a helix appearance.

5. Install small spacer to shaft.

6. Apply Blue Loctite #242 to nut. Install nut onto shaft, (machined side of nut toward spacer) and tighten to 80 –100 ft–lb.

Assembling the Dethatcher Reel

1. Slide the reel bearing locking collars onto the reel shaft with the locking collars facing inward and not tightened.

2. Place the dethatcher shaft assembly into the frame assembly. Through the side plates, slide a bearing housing onto the dethatcher shaft. Secure the bearing housing to the side plate with the capscrews previously removed. Tighten the capscrews to 14–18 ft.-lb. (19–24 N·m).

3. Position the reel shaft assembly so that the end of the shaft is 0.43 in. inward from the outside surface of the bearing housing (Fig. 11).

4. Use a drive pin and hammer to tighten the locking collars on the reel shaft bearings. Tighten them in the direction of rotation. Tighten the setscrews 61 to 85 in. lb. (7–10 N·m).

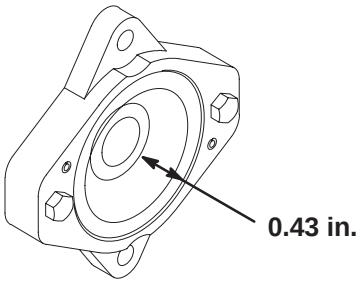

Figure 11

PROTOTYPE

PROTOTYPE

The Toro General Commercial Products Warranty

A Two-Year Limited Warranty

Conditions and Products Covered

The Toro Company and its affiliate, Toro Warranty Company, pursuant to an agreement between them, jointly warrant your 1996 or newer Toro Commercial Product ("Product") purchased after January 1, 1997, to be free from defects in materials or workmanship for two years or 1500 operational hours*, whichever occurs first. Where a warrantable condition exists, we will repair the Product at no cost to you including diagnosis, labor, parts, and transportation. This warranty begins on the date the Product is delivered to the original retail purchaser.

* Product equipped with hour meter

Instructions for Obtaining Warranty Service

You are responsible for notifying the Commercial Products Distributor or Authorized Commercial Products Dealer from whom you purchased the Product as soon as you believe a warrantable condition exists.

If you need help locating a Commercial Products Distributor or Authorized Dealer, or if you have questions regarding your warranty rights or responsibilities, you may contact us at:

Toro Commercial Products Service Department
Toro Warranty Company
8111 Lyndale Avenue South
Bloomington, MN 55420-1196
952-888-8801 or 800-982-2740
E-mail: commercial.service@toro.com

Owner Responsibilities

As the Product owner, you are responsible for required maintenance and adjustments stated in your operator's manual. Failure to perform required maintenance and adjustments can be grounds for disallowing a warranty claim.

Items and Conditions Not Covered

Not all product failures or malfunctions that occur during the warranty period are defects in materials or workmanship. This express warranty does not cover the following:

- Product failures which result from the use of non-Toro replacement parts, or from installation and use of add-on, modified, or unapproved accessories
- Product failures which result from failure to perform required maintenance and/or adjustments
- Product failures which result from operating the Product in an abusive, negligent or reckless manner
- Parts subject to consumption through use unless found to be defective. Examples of parts which are consumed, or used up, during normal Product operation include, but are not limited to, blades, reels, bedknives, tines, spark plugs, castor wheels, tires, filters, belts, etc.
- Failures caused by outside influence. Items considered to be outside influence include, but are not limited to, weather, storage practices, contamination, use of unapproved coolants, lubricants, additives, or chemicals, etc.
- Normal "wear and tear" items. Normal "wear and tear" includes, but is not limited to, damage to seats due to wear or abrasion, worn painted surfaces, scratched decals or windows, etc.

Parts

Parts scheduled for replacement as required maintenance are warranted for the period of time up to the scheduled replacement time for that part.

Parts replaced under this warranty become the property of Toro. Toro will make the final decision whether to repair any existing part or assembly or replace it. Toro may use factory remanufactured parts rather than new parts for some warranty repairs.

General Conditions

Repair by an Authorized Toro Distributor or Dealer is your sole remedy under this warranty.

Neither The Toro Company nor Toro Warranty Company is liable for indirect, incidental or consequential damages in connection with the use of the Toro Products covered by this warranty, including any cost or expense of providing substitute equipment or service during reasonable periods of malfunction or non-use pending completion of repairs under this warranty. Except for the Emissions warranty referenced below, if applicable, there is no other express warranty. All implied warranties of merchantability and fitness for use are limited to the duration of this express warranty.

Some states do not allow exclusions of incidental or consequential damages, or limitations on how long an implied warranty lasts, so the above exclusions and limitations may not apply to you.

This warranty gives you specific legal rights, and you may also have other rights which vary from state to state.

Note regarding engine warranty: The Emissions Control System on your Product may be covered by a separate warranty meeting requirements established by the U.S. Environmental Protection Agency (EPA) and/or the California Air Resources Board (CARB). The hour limitations set forth above do not apply to the Emissions Control System Warranty. Refer to the Engine Emission Control Warranty Statement printed in your operator's manual or contained in the engine manufacturer's documentation for details.

PROTOTYPE

Countries Other than the United States or Canada

Customers who have purchased Toro products exported from the United States or Canada should contact their Toro Distributor (Dealer) to obtain guarantee policies for your country, province, or state. If for any reason you are dissatisfied with your Distributor's service or have difficulty obtaining guarantee information, contact the Toro importer. If all other remedies fail, you may contact us at Toro Warranty Company.

Part No. 374-0031 Rev. –