FORM NO. 3326–335

TORO®

Parking Brake Kit

Proline Mid–Size Hydro Mowers

Part No. 105–0898

INSTALLATION INSTRUCTIONS

Safety

To comply with ANSI B71.4 1999 Standard, this parking brake kit must be added to this machine.

Note: The addition of attachments made by other manufacturers that do not meet American National Standards Institute certification will cause noncompliance of this machine.

Safe Operation

- Be sure all drives are in neutral and parking brake is engaged before starting engine.
- Stop on level ground, disengage drives, engage parking brake, shut off engine before leaving the operator's position for any reason including emptying the catchers or unclogging the chute.
- Check brake operation frequently. Adjust and service as required.

Loose Parts

Note: Use the chart below to identify parts for assembly.

DESCRIPTION	QTY.	USE
Grip	1	Assemble handle and bracket
Handle	1	
Upper bracket	1	
Bushing	1	
Bolt, 3/8 x 2.50 in.	1	
Washer, 7/16 in.	2	
Lock Nut, 3/8 in.	1	
Bracket Assembly	1	Installing Upper Bracket
Bolt, 5/16 x 3–1/4 in., T–bar machines only	1	
Lock Nut, 5/16 in.	1	
Bolt, 1/4 x 7/8 in.	1	
Lock Nut, 1/4 in.	1	
Bolt, 5/16 x 7/8 in., Pistol grip machines only	1	

PROTOTYPE

©The Toro Company – 2001
All Rights Reserved

Printed in USA

DESCRIPTION	QTY.	USE
Brake Assembly	1	
Bolt, 3/8 x 1–1/4 in.	3	
Lock Nut, 3/8 in.	3	
Bolt, 3/8 x 1–3/4 in.	1	
Jam Nut, 3/8 in.	1	Installing Brake Assembly
Flange Nut, 5/16 in.	2	
Bolt, 5/16 x 1–1/4 in.	1	
Spring	1	
Flange Nut, 3/8 in.	1	
Brake Rod	1	
Clevis Pin	1	
Hair pin cotter	1	Installing Brake Rod
Yoke	1	
Cotter Pin	1	

Kit Installation

Remove Bolts

1. Remove long bolt from the rightside bracket as shown in figure 1. Discard this bolt and nut.

2. Remove the one short bolt that holds the bearing to the bracket as shown in figure 1. Discard this bolt and nut.

Note: Save the spacer used on T–bar machines.

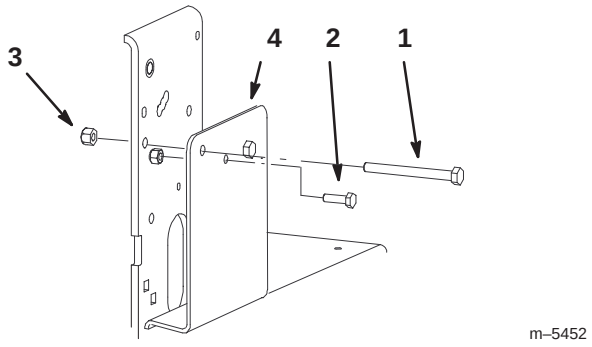

Figure 1

1. Long bolt
2. Short bolt
3. Nut
4. Rightside bracket

PROTOTYPE

Assemble Handle and Bracket

1. Install grip onto handle (Fig. 2).

2. Install bushing into the upper bracket (Fig. 2).

3. Install the handle to bracket with a bolt (3/8 x 2.50 in.), 2 washers (7/16 in.) and a locknut (3/8 in.) (Fig. 2).

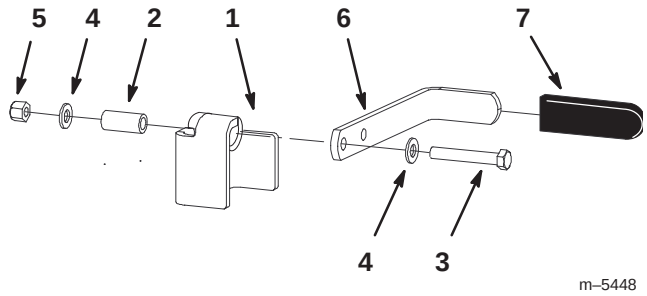

Figure 2

1. Upper bracket
2. Bushing
3. Bolt, 3/8 x 2–1/2 in.
4. Washer, 7/16 in.
5. Locknut. 3/8 in.
6. Handle
7. Grip

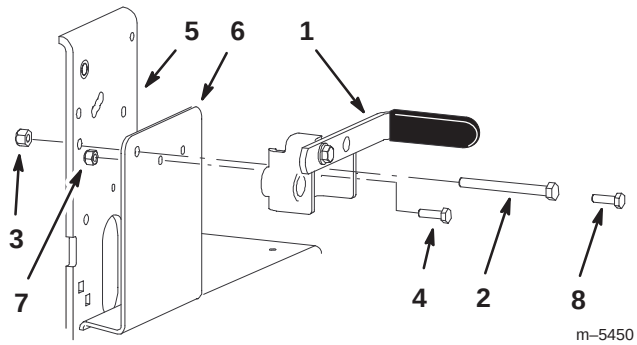

Figure 3

1. Bracket assembly
2. Bolt, 5/16 x 3–1/4 in., for T–bar
3. Locknut. 5/16 in.
4. Bolt, 1/4 x 7/8 in.
5. Machine frame
6. Side plate
7. Locknut. 1/4 in.
8. Bolt, 5/16 x 7/8 in., for Pistol grip

Install Upper Bracket

IMPORTANT: Use the correct bolt in step 1 according to the style of machine you have.

Use a 5/16 x 7/8 in. bolt for a pistol grip machine.

Use a 5/16 x 3–1/4 in. bolt for a T–bar machine.

1. Install upper bracket to the machine frame with a bolt (5/16 x 3–1/4 in. or 5/16 x 7/8 in.) and locknut (Fig. 3). Install spacer on T–bar units.

2. Install upper bracket to the side plate and bearing with a bolt (5/16 x 7/8 in.) and locknut (Fig. 3).

Install Brake Assembly

1. Install brake assembly to machine frame with 3 bolts (3/8 x 1–1/4 in.) and 3 locknuts (3/8 in.) (Fig. 4).

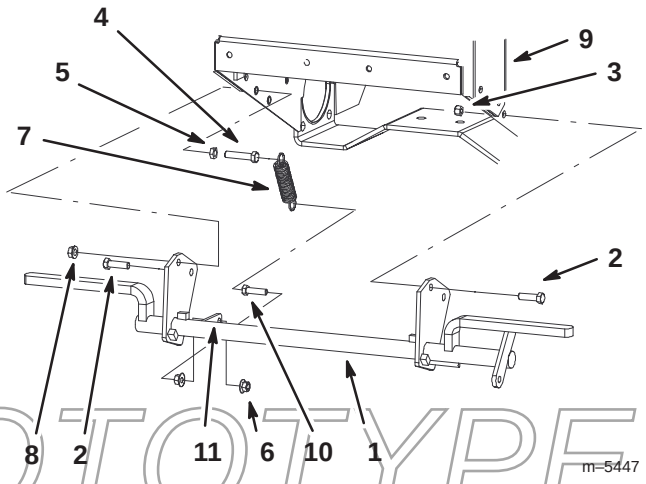

PROTOTYPE

Figure 4

1. Brake assembly
2. Bolt, 3/8 x 1–1/4 in.
3. Lock Nut, 3/8 in.
4. Upper bolt, 3/8 x 1–3/4 in.
5. Jam Nut, 3/8 in.
6. Flange Nut, 5/16 in.
7. Spring
8. Flange Nut, 3/8 in.
9. Machine frame
10. Lower bolt, 5/16 x 1–1/4 in.
11. Tab

2. Install lower bolt (5/16 x 1–1/4 in.) in the brake assembly using two flange nuts (5/16 in.) on both sides of the tab (Fig. 4 and 5).

Note: Install bolt so 2 or 3 threads show out of the flange nut (Fig. 4 and 5).

3. Install spring onto upper bolt (3/8 x 1–3/4 in.) as shown in figures 4 and 5.

4. Install upper bolt (3/8 x 1–3/4 in.) in the brake assembly and machine frame using a flange nut (5/16 in.) and jam nut (5/16 in.) on both sides of the tab (Fig. 4 and 5).

Note: Install bolt so 2 or 3 threads show out of the flange nut (Fig. 4 and 5).

5. Install spring onto lower bolt (5/16 x 1–1/4 in.) as shown in figures 4 and 5.

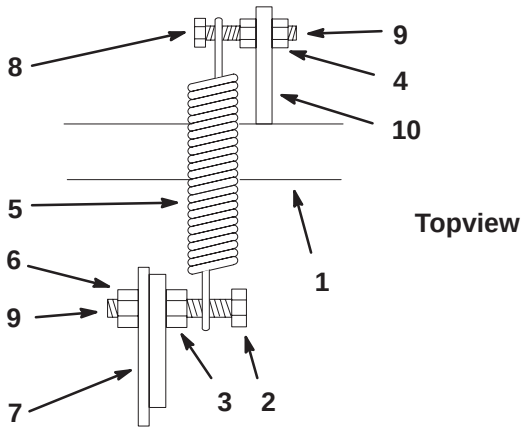

Figure 5

1. Brake assembly
2. Upper bolt, 3/8 x 1–3/4 in.
3. Jam Nut, 3/8 in.
4. Flange Nut, 5/16 in.
5. Spring
6. Flange Nut, 3/8 in.
7. Machine frame
8. Lower bolt, 5/16 x 1–1/4 in.
9. Two or three threads showing
10. Tab

Install Brake Rod

1. Install yoke onto brake rod, 1–1/4 in. from the top of threads.

2. Install yoke onto the brake assembly with a clevis pin and a hairpin cotter.

3. Install the “L” shaped end into brake handle. with a cotter pin.

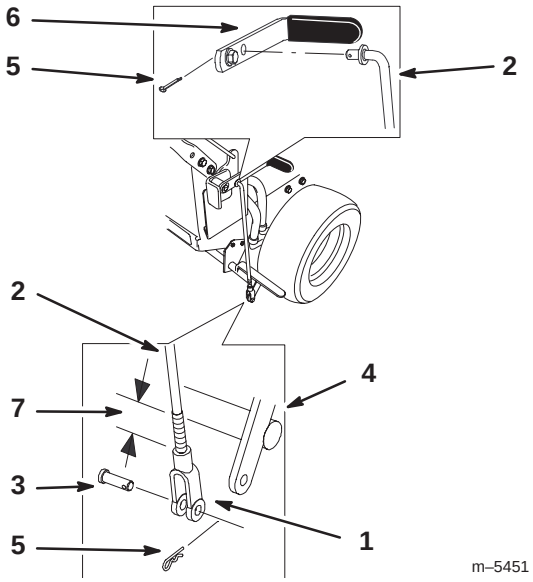

Figure 6

1. Yoke
2. Brake rod
3. Clevis pin
4. Brake assembly
5. Hairpin cotter
6. Handle
7. 1–1/4 in.

Check Operation of Brake

1. Check brake for proper operation as described below.

2. Refer to Brake Service if adjustment is needed on page 5.

PROTOTYPE

Parking Brake Operation

Always set the parking brake when you stop the machine or leave it unattended. Before each use, check brake for proper operation.

If the parking brake does not hold securely, an adjustment is required. Refer to Brake Service on page 5.

Caution

Children or bystanders may be injured if they move or attempt to operate the machine while it is unattended.

Always remove the ignition key and set the parking brake when leaving the machine unattended, even if just for a few minutes.

Setting the Parking Brake

1. Pull the brake handle rearward (Fig. 7).

Releasing the Parking Brake

1. Push the brake handle forward (Fig. 7).

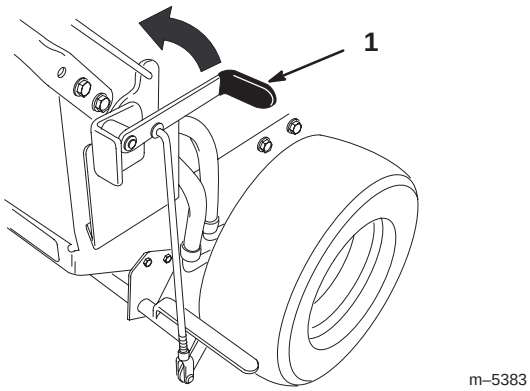

Figure 7

1. Parking brake lever (released position)

Brake Service

Service Interval/Specification

Before each use, check brake for proper operation.

Always set the parking brake when you stop the machine or leave it unattended. If the parking brake does not hold securely, an adjustment is required.

Checking the Brake

1. Set the parking brake (Fig. 8).

2. Park the machine on a level surface, disengage the power take off (PTO) and turn the ignition key to "OFF" to stop the engine. Remove the key.

3. To set the parking brake, it should take a reasonable amount of force. If it engages too hard or easily, adjustment is required. Refer to Adjusting the Brake on page 5.

Note: When the brake is engaged, the brake handle should be close to the 11 o'clock position.

4. If there is a reasonable amount of force, no adjustment is required.

Adjusting the Brake

The brake handle is on the right side of machine (Fig. 8). If the parking brake does not hold securely, an adjustment is required.

1. Check the brake before you adjust it; refer to Checking the Brake, page 5.

2. Release the parking brake; refer to Releasing the Parking Brake, page 5.

3. To adjust the brake, remove the hair pin cotter and clevis pin from the lower brake lever (Fig. 8).

4. Rotate the yoke in to tighten the brake and rotate out to loosen the brake (Fig. 8).

5. Secure yoke to lower brake lever with the hair pin cotter and clevis pin (Fig. 8).

6. Check the brake operation again; refer to Checking the Brake, page 5.

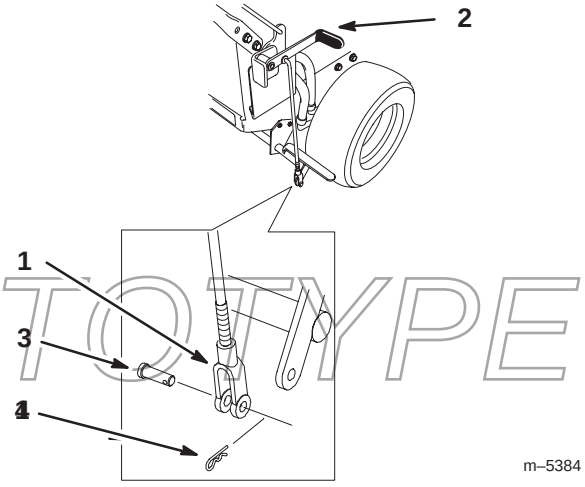

Figure 8

1. Yoke
2. Parking brake lever (released position)
3. Clevis pin
4. Hairpin cotter

PROTOTYPE

PROTOTYPE

PROTOTYPE



PROTOTYPE