Form No. 3326-338

TORO®

Spark Arrester Kit

Z-Master® Traction Units

Part No. 105-1672 (for use on 1-1/4 in muffler outlets) and 105-1673 (for use on 1-1/2 in muffler outlets)

Installation Instructions

Important When finished installing the spark arrester, store this sheet with your traction unit *Operator's Manual* for future reference.

Loose Parts

Note: Use the chart below to identify parts for assembly.

Description	Qty.	Use
Spark arrester	1	Installing the spark arrester
Clamp	1	

Installing the Spark Arrester

1. Stop the PTO, set the parking brake, stop the engine, and remove the ignition key.
2. Allow the traction unit to cool completely.
3. Slide the slotted end of the spark arrester over the exhaust outlet on the muffler as far as possible by hand (Fig. 1).

Important Do not use a hammer or other instrument to pound the arrester onto the exhaust outlet. Pounding on the arrester will damage it.

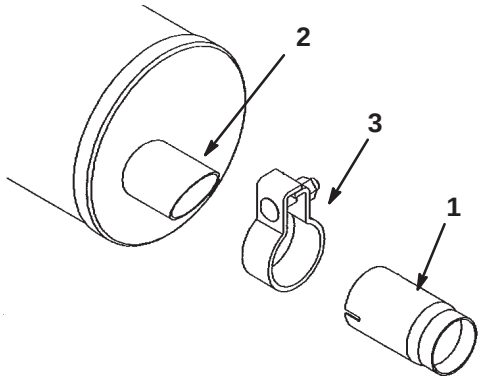

Figure 1

1. Spark arrester
2. Muffler exhaust outlet
3. Clamp

4. Slide the clamp over the arrester until it is flush with the slotted end of the arrester so that the clamp covers the slots in the arrester (Fig. 1).
5. Tighten the clamp.

Maintaining the Spark Arrester

Inspect the spark arrester every 50 hours for damage, such as holes in the screen, and for build-up on the screen. If it is damaged, replace it with a new spark arrester. If it is dirty, remove it and clean the screen with a wire brush and/or soak it in solvent. Install it as indicated in the previous procedure.