Form No. 3448-326 Rev A

TORO®

Count on it.

Parts Catalog

# Workman® GTX

## EFI Utility Vehicle

**Model No. 07409—Serial No. 409755302 and Up**

Register at www.Toro.com.
Original Instructions (EN)

*3448-326* A

# Ordering Replacement Parts

To order replacement parts, please supply the part number, the quantity, and the description of each part desired.

### Understanding Reference Numbers

Each identified part in an illustration has a reference number. The reference number for a part also appears in the parts list, along with other information about the part.

This catalog uses two special reference number formats, one to indicate parts in a service assembly and another to indicate the quantity of a given part in an illustration.

### Service Assembly Reference Numbers

Parts in service assemblies have reference numbers in the form a:b. The a represents the reference number of the entire service assembly and the b represents a sequential number unique to each part within the service assembly.

For example, a wheel assembly might be identified by reference number 6, the tire by 6:1, the valve by 6:2, and the wheel by 6:3. When you order the assembly identified by reference number 6, you receive all parts identified by reference numbers 6:1,6:2, and 6:3. However, you may also order any part individually. Reference numbers of this type appear in illustration and in parts lists.

### Reference Numbers Indicating Quantity

In an illustration, if a reference number indicates more than one part, the reference number has the form nX y. The n represents the quantity of the part, the X is the multiplication symbol, and the y represents the reference number.

For example, in an illustration, the reference number 2X 37 means that two of the parts identified by reference number 37 are indicated.

# Contents

Front Frame and Suspension Assembly . . . . . 4
Floor Plate and Rear Suspension Mount Assembly . . . . . 5
Rear Frame and Suspension Assembly . . . . . 6
Frame Mount and Rear Shock/Spring Assembly . . . . . 7
Brake Assembly . . . . . 8
Master Cylinder Assembly No. 104-6782 . . . . . 9
Brake Caliper Assembly No. 140-2575 . . . . . 10
Steering Assembly . . . . . 11
Pedal and Control Assembly . . . . . 12
Hood and Fender Assembly . . . . . 14
Dash Assembly . . . . . 15
Seatbase Assembly . . . . . 16
Cargo Bed Assembly . . . . . 17
Engine Assembly . . . . . 18
Starter Generator Assembly No. 131-8444 . . . . . 20
Secondary Clutch Assembly No. 119-6011 . . . . . 21
Engine Assembly No. 133-8092 . . . . . 22
Engine Assembly No. 133-8092 . . . . . 25
Air Cleaner Assembly No. 138-3447 . . . . . 27
Primary Clutch Assembly No. 138-0095 . . . . . 28
Rear Wheel and Transaxle Assembly . . . . . 29
Transaxle Assembly No. 131-3486 . . . . . 30
Battery and Cable Assembly . . . . . 32
Electrical Assembly . . . . . 33
Fuel System Assembly . . . . . 35
Attachments and Accessories . . . . . 37

**© 2021—The Toro® Company**
**8111 Lyndale Avenue South**
**Bloomington, MN 55420**



**Contact us at www.Toro.com.**
**Printed in the USA.**
**All Rights Reserved**

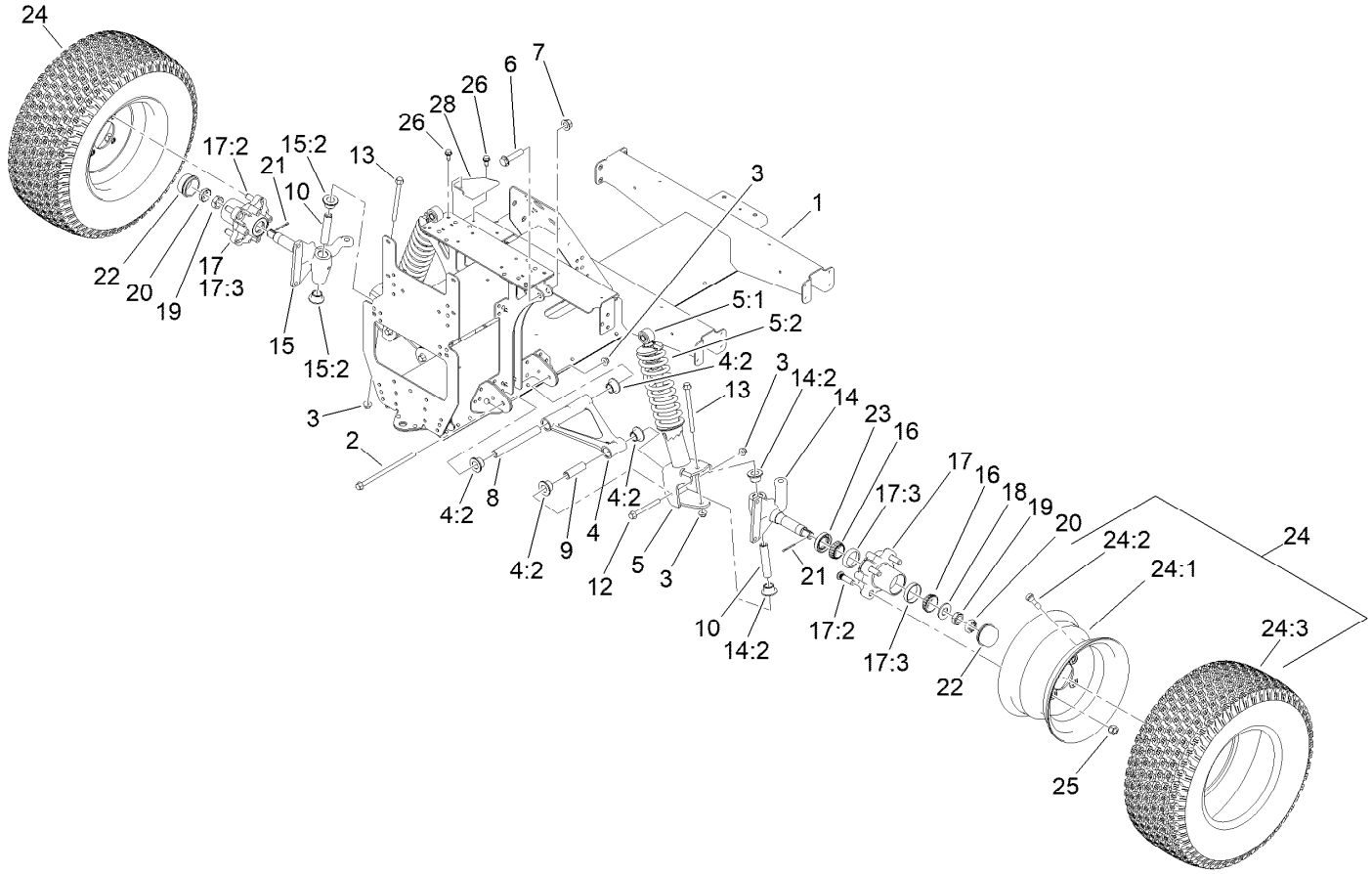


# Front Frame and Suspension Assembly

| Ref. | Part Number | Qty. | Description |
|---|---|---|---|
| 1 | 127-7718-03 | 1 | Frame-Front |
| 2 | 139-3360 | 2 | Screw-HF |
| 3 | 139-3380 | 6 | Nut-HF |
| 4 | 144-2161 | 2 | Control Arm ASM |
| 4:2 | 140-4615 | 4 | Bushing-Flange |
| 5 | 139-4484 | 2 | Strut ASM, 250 Lb (16.33" EXT Length) |
| 5:1 | 131-8574 | 1 | Isolator-Shock |
| 5:2 | 137-6719 | 1 | Spring-Compression, 250Lb |
| 6 | 3234-46 | 2 | Screw-HHF |
| 7 | 99-5107 | 2 | Nut-Lock |
| 8 | 131-8581 | 2 | Sleeve-Control Arm, Inner |
| 9 | 131-8583 | 2 | Sleeve-Control Arm, Outer |
| 10 | 131-8582 | 2 | Sleeve-Kingpin |
| 12 | 139-3370 | 2 | Screw-HF |
| 13 | 139-3350 | 2 | Screw-HF |
| 14 | 144-2162 | 1 | Spindle ASM, LH |
| 14:2 | 140-4615 | 2 | Bushing-Flange |
| 15 | 144-2163 | 1 | Spindle ASM, RH |

| Ref. | Part Number | Qty. | Description |
|---|---|---|---|
| 15:2 | 140-4615 | 2 | Bushing-Flange |
| 16 | 254-94 | 4 | Bearing-Cone, Tapered |
| 17 | 127-8851 | 2 | Front Hub ASM |
| 17:2 | 10-6830 | 4 | Stud-Type, Drive |
| 17:3 | 254-72 | 2 | Bearing-Cup, Tapered |
| 18 | 93-0309 | 2 | Washer-Tab |
| 19 | 3220-7 | 2 | Nut-Jam |
| 20 | 93-0307 | 2 | Nut-Lock, Retainer |
| 21 | 3272-12 | 2 | Pin-Cotter |
| 22 | 241-119 | 2 | Cap-Dust |
| 23 | 112-1690 | 2 | Seal-Oil |
| 24 | 139-4495 | 2 | Wheel And Tire ASM |
| 24:1 | 131-8317 | 1 | Wheel |
| 24:2 | 232-27 | 1 | Stem-Valve |
| 24:3 | 139-4475 | 1 | Tire-20 X 8.00-10 |
| 25 | 242-50 | 8 | Nut-Lug |
| 26 | 32144-70 | 2 | Screw-HWHTF |
| 28 | 131-8339-03 | 1 | Reinforcement-Tower |

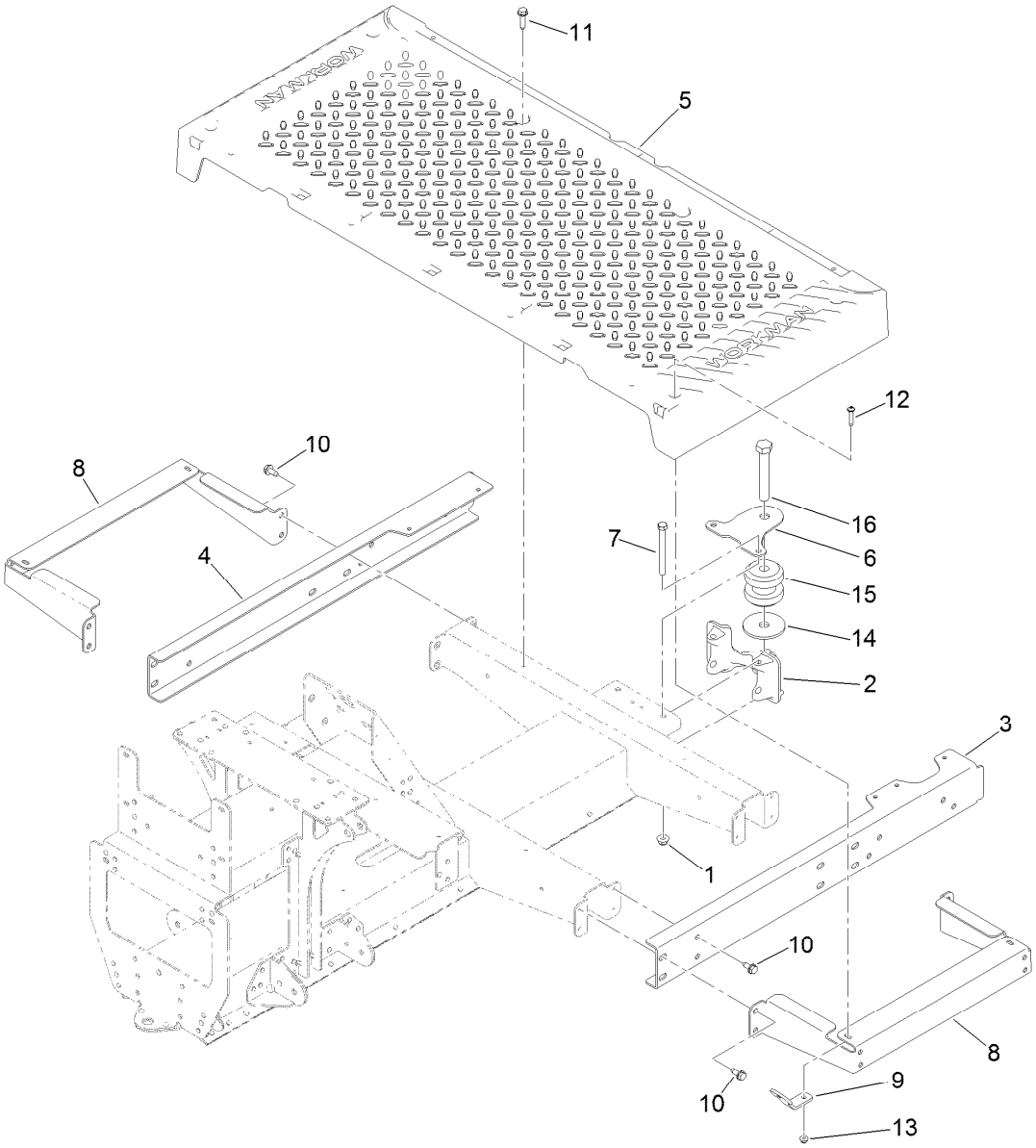


# Floor Plate and Rear Suspension Mount Assembly

| Ref. | Part Number | Qty. | Description |
|---|---|---|---|
| 1 | 104-8301 | 2 | Nut-HF, NI |
| 2 | 131-8466 | 1 | Mount-Suspension, Rear |
| 3 | 127-7820-03 | 1 | Channel-Frame, Front (LH) |
| 4 | 127-7821-03 | 1 | Channel-Frame, Front (RH) |
| 5 | 127-7829 | 1 | Plate-Floor |
| 6 | 131-8597 | 1 | Plate-Gimbal, Upper |
| 7 | 323-42 | 2 | Screw-HH |
| 8 | 127-7837-03 | 2 | Bracket-Support, Floor Plate |

| Ref. | Part Number | Qty. | Description |
|---|---|---|---|
| 9 | 127-7832 | 2 | Bracket-Angle |
| 10 | 32144-70 | 16 | Screw-HWHTF |
| 11 | 32144-49 | 4 | Screw-HWHTF |
| 12 | 132-6777 | 4 | Screw-TTH |
| 13 | 104-7201 | 4 | Nut-HF, NI |
| 14 | 110-4549 | 1 | Washer-Snubbing |
| 15 | 131-8480 | 1 | Isolator |
| 16 | 104-5877 | 1 | Screw-HH |

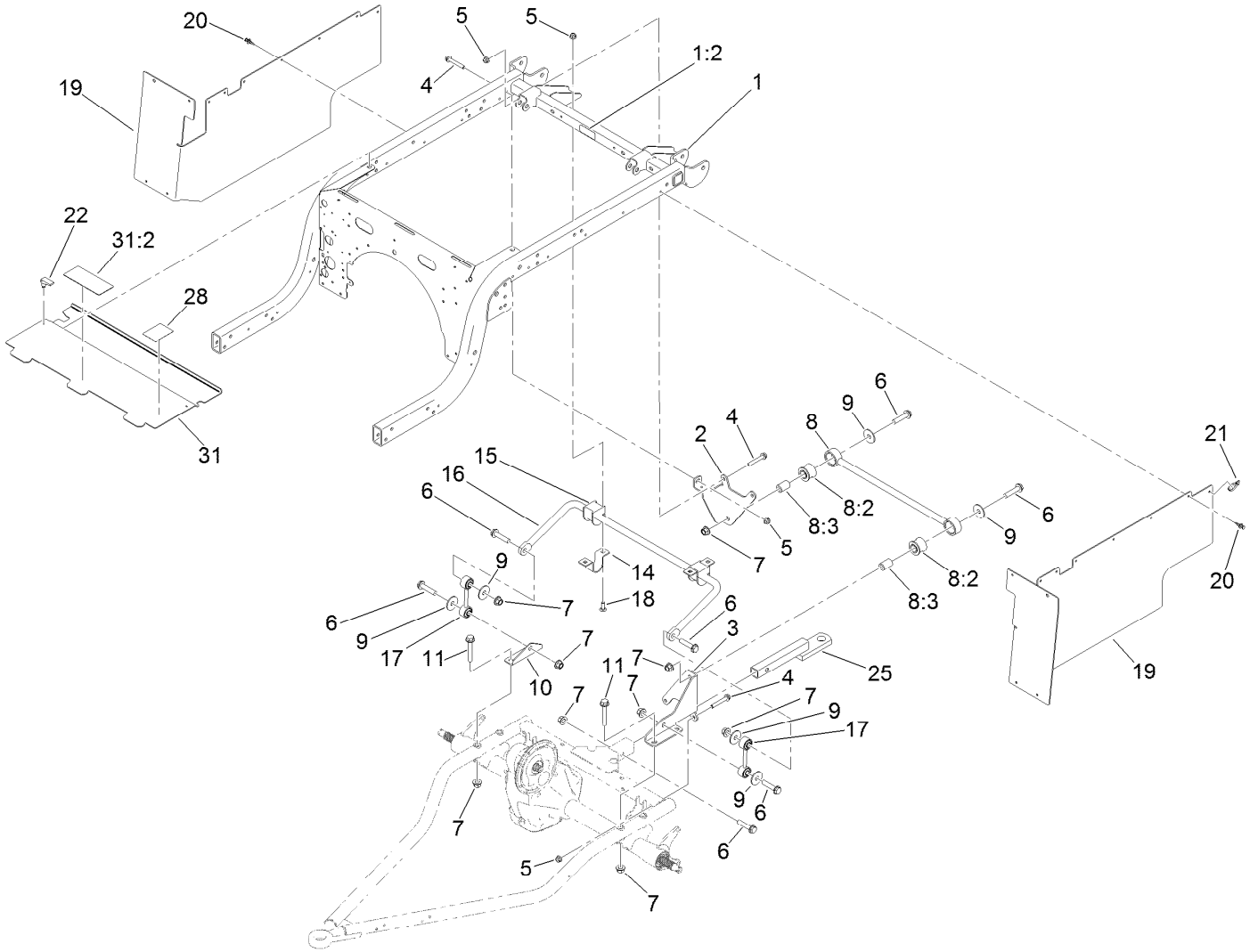


# Rear Frame and Suspension Assembly

| Ref. | Part Number | Qty. | Description |
|---|---|---|---|
| 1 | 140-2498 | 1 | Rear Frame ASM |
| 1:2 | 115-2047 | 1 | Decal-Surface, Hot |
| 2 | 139-4647-03 | 1 | Bracket-Stabilizer Bar |
| 3 | 127-7411-03 | 1 | Bracket-Bar, Stabilizer |
| 4 | 3234-39 | 5 | Screw-HHF |
| 5 | 104-8301 | 9 | Nut-HF, NI |
| 6 | 3234-46 | 7 | Screw-HHF |
| 7 | 99-5107 | 11 | Nut-Lock |
| 8 | 109-5013 | 1 | Panhard Rod ASM |
| 8:2 | 109-5009 | 2 | Bushing-Suspension, Rubber |
| 8:3 | 109-5010 | 2 | Spacer |
| 9 | 86-1990 | 6 | Washer-Thrust |
| 10 | 131-8315 | 1 | Bracket-Link, Sway Bar |

| Ref. | Part Number | Qty. | Description |
|---|---|---|---|
| 11 | 3234-40 | 4 | Screw-HF |
| 14 | 139-4644 | 2 | Clamp, Anti-Sway Bar |
| 15 | 87-3910 | 2 | Bushing-Rubber |
| 16 | 131-8310-03 | 1 | Bar-Sway, Anti |
| 17 | 131-8394 | 2 | Link-Bar, Sway |
| 18 | 3231-22 | 4 | Screw-CARR |
| 19 | 131-8346 | 2 | Panel-Side |
| 20 | 125-9622 | 20 | Rivet-Blind |
| 21 | 3290-378 | 2 | Tie-Cable |
| 22 | 74-5950 | 2 | Latch-Swell |
| 25 | 137-6741 | 1 | Ball Mount ASM |
| 28 | 138-3528 | 1 | Decal-Service |
| 31 | 140-4573 | 1 | Extended Panel-Cover |
| 31:2 | 99-7345 | 1 | Decal-Warning |

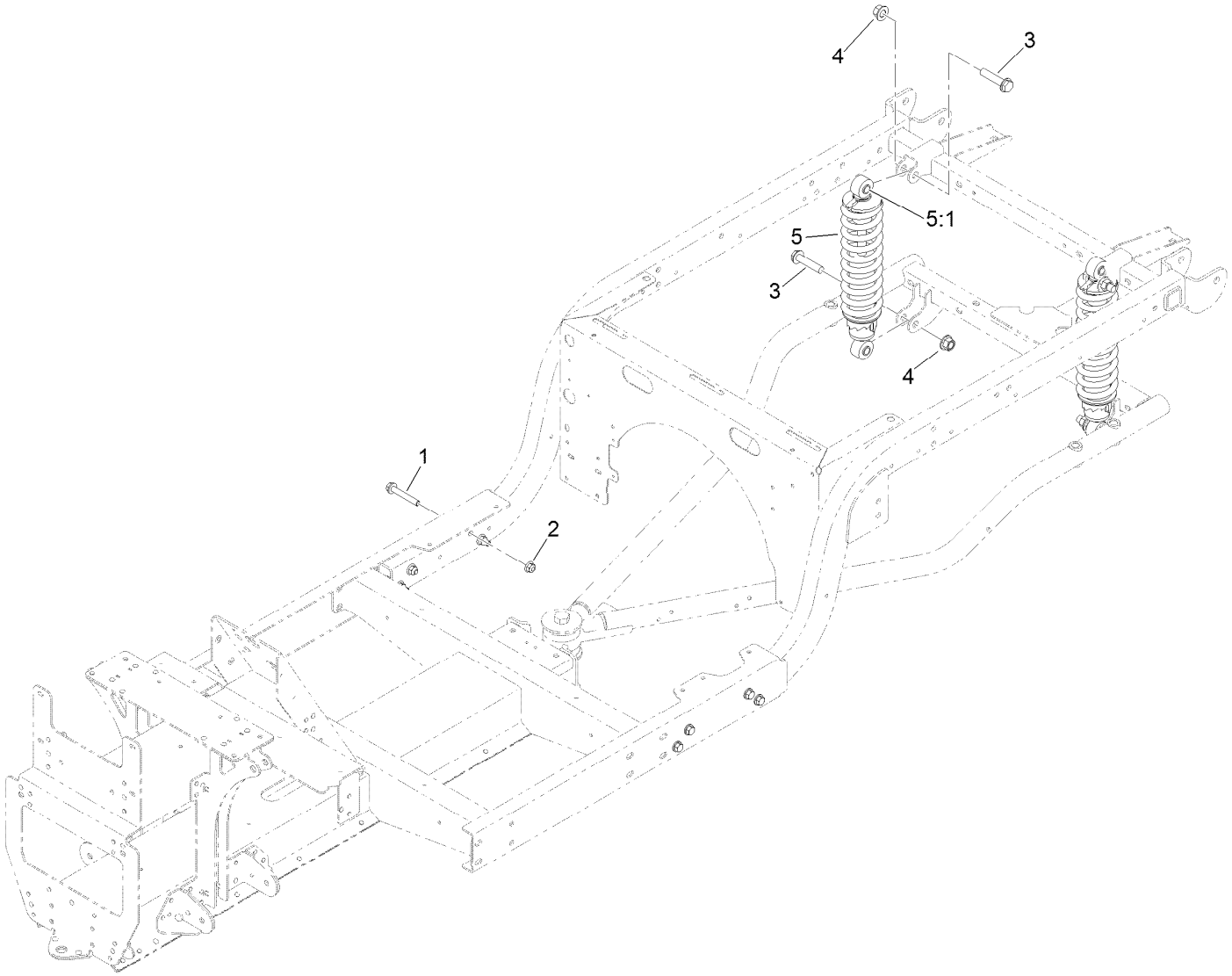


# Frame Mount and Rear Shock/Spring Assembly

| *Ref.* | *Part Number* | *Qty.* | *Description* |
|---|---|---|---|
| 1 | 3234-39 | 8 | Screw-HHF |
| 2 | 104-8301 | 8 | Nut-HF, NI |
| 3 | 3234-46 | 4 | Screw-HHF |
| 4 | 99-5107 | 4 | Nut-Lock |
| 5 | 139-4607 | 2 | Shock/Spring ASM |
| 5:1 | 131-8574 | 2 | Isolator-Shock |

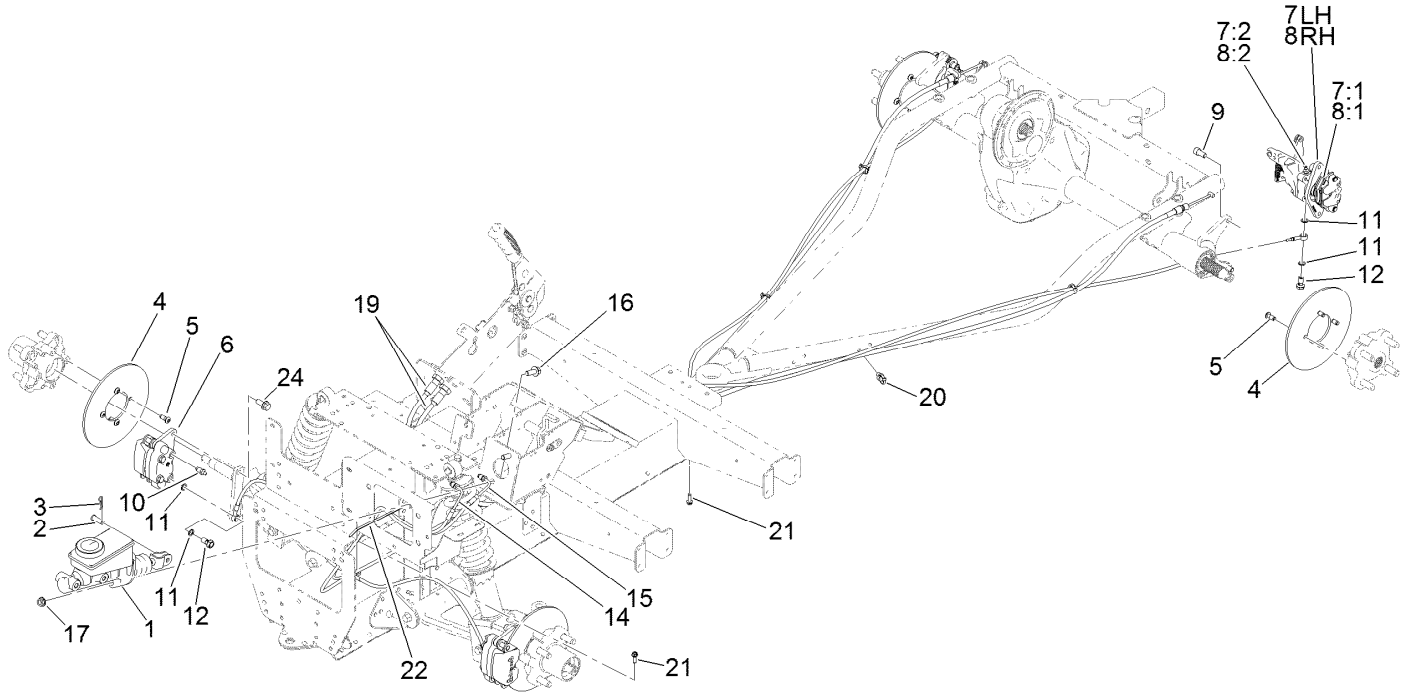


# Brake Assembly

| Ref. | Part Number | Qty. | Description |
|---|---|---|---|
| 1 | 104-6782 | 1 | Master Cylinder ASM |
| 2 | 283-2 | 1 | Pin-Clevis |
| 3 | 1-806003 | 1 | Pin-Cotter |
| 4 | 139-4474 | 4 | Rotor-Brake |
| 5 | 121-9671 | 16 | Screw-HSBH |
| 6 | 140-2575 | 2 | Brake Caliper ASM |
| 7 | 140-2585 | 1 | Brake Caliper ASM, LH |
| 7:1 | 140-2595 | 1 | Brake Pad Service Kit (Rear, Qty 4) |
| 7:2 | 119-9509 | 1 | Screw-Bleed |
| 7:3 | 136-6328 | 2 | Spring-Rattle, Anti ● |
| 8 | 140-2590 | 1 | Brake Caliper ASM, RH |
| 8:1 | 140-2595 | 1 | Brake Pad Service Kit (Rear, Qty 4) |
| 8:2 | 119-9509 | 1 | Screw-Bleed |
| 8:3 | 136-6328 | 2 | Spring-Rattle, Anti ● |
| 9 | 131-8573 | 4 | Screw-HSH |
| 10 | 119-9509 | 2 | Screw-Bleed |
| 11 | 115-2341 | 8 | Washer-Banjo |
| 12 | 120-4875 | 4 | Bolt-Flange, Banjo |
| 14 | 127-7781 | 1 | Brake Line-Front |
| 15 | 127-7782 | 1 | Brake Line-Rear |
| 16 | 3234-11 | 2 | Screw-HHF |
| 17 | 3290-357 | 2 | Nut-HHF, Whiz |
| 19 | 131-8406 | 2 | Cable-Park Brake |
| 20 | 32180-030 | 4 | Clip-Tie |
| 21 | 49-2040 | 2 | Screw-HWHTF |
| 22 | 3290-378 | 1 | Tie-Cable |
| 24 | 3234-25 | 4 | Screw-HHF |

● Not illustrated

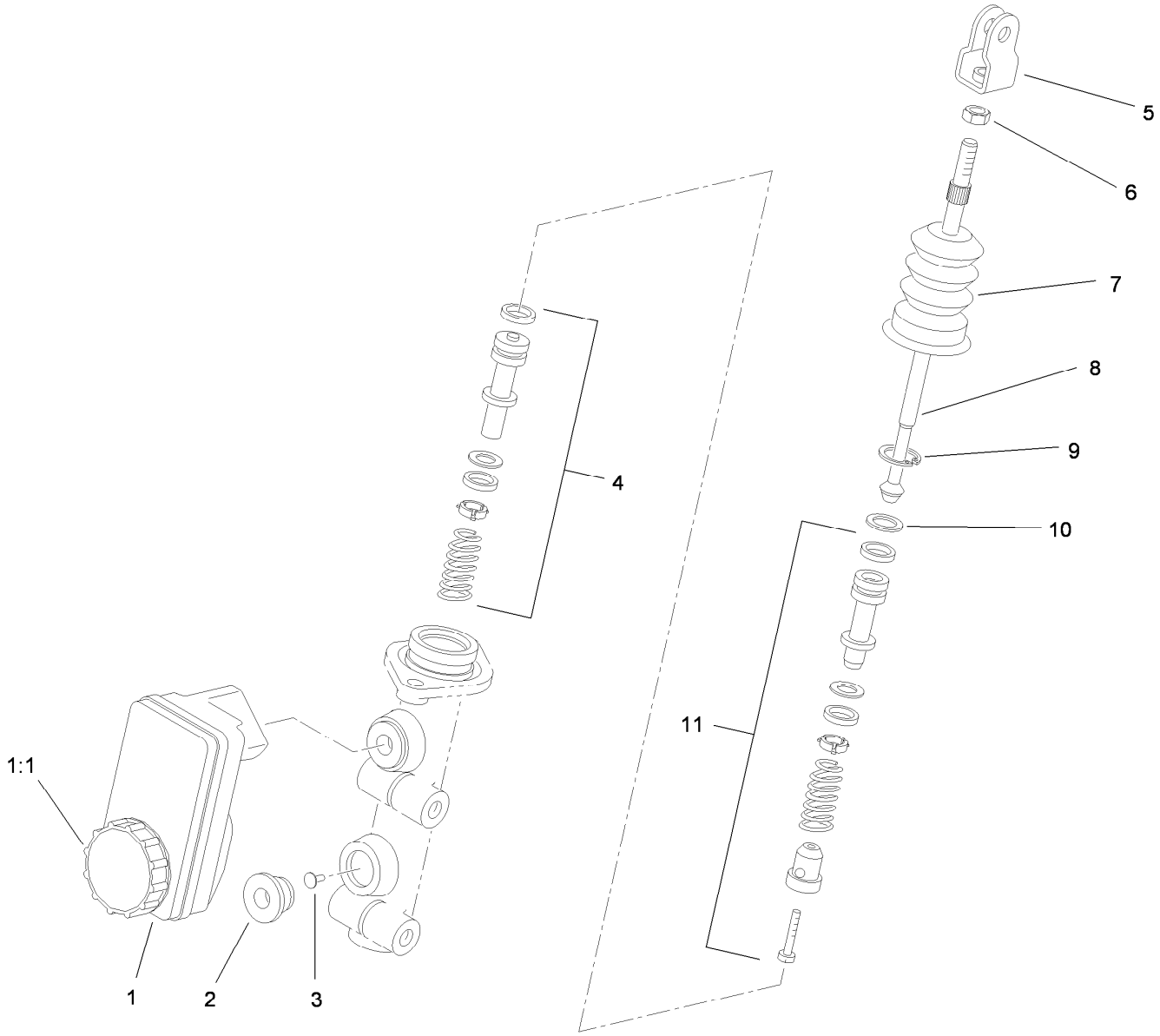


# Master Cylinder Assembly No. 104-6782

| *Ref.* | *Part Number* | *Qty.* | *Description* |
|---|---|---|---|
| 1 | 104-6845 | 1 | Reservoir ASM |
| 1:1 | 92-4112 | 1 | Cap ASM |
| 2 | 93-8971 | 2 | Seal-Port, Flange |
| 3 | 92-4103 | 1 | Pin-Stop |
| 4 | 92-4102 | 1 | Secondary Piston ASM |
| 5 | 92-4110 | 1 | Clevis |
| 6 | 21-0360 | 1 | Nut-Hex |
| 7 | 94-5209 | 1 | Cover-Dust |
| 8 | 94-5210 | 1 | Rod-Push |
| 9 | 92-4109 | 1 | Ring-Snap |
| 10 | 92-4108 | 1 | Retainer-Washer |
| 11 | 92-4101 | 1 | Primary Piston ASM |

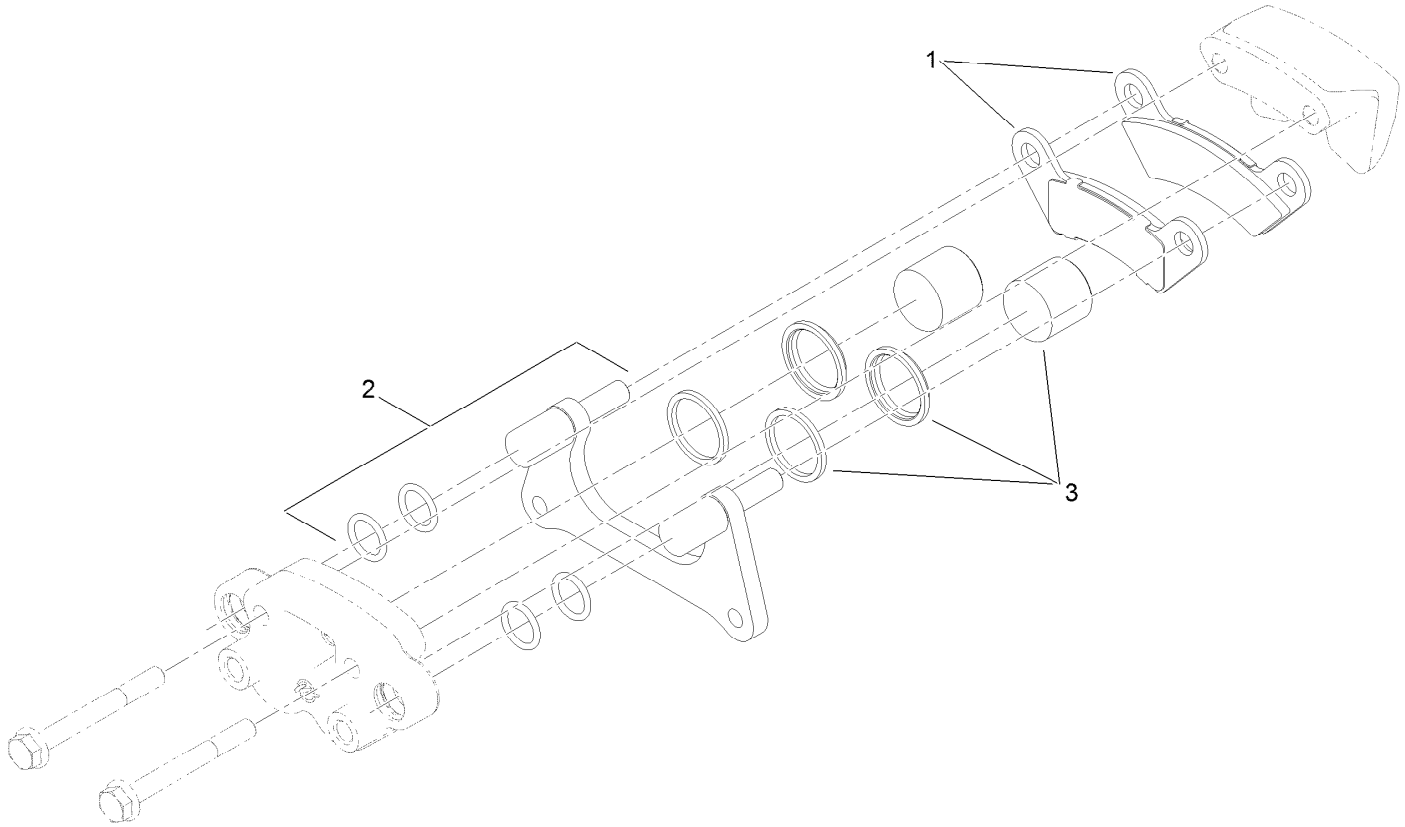


# Brake Caliper Assembly No. 140-2575

| *Ref.* | *Part Number* | *Qty.* | *Description* |
|---|---|---|---|
| 1 | 140-2580 | 1 | Brake Pad Service Kit (Front, Qty 4) |
| 2 | 119-9511 | 1 | Bracket Kit |
| 3 | 133-0614 | 1 | Piston Kit |

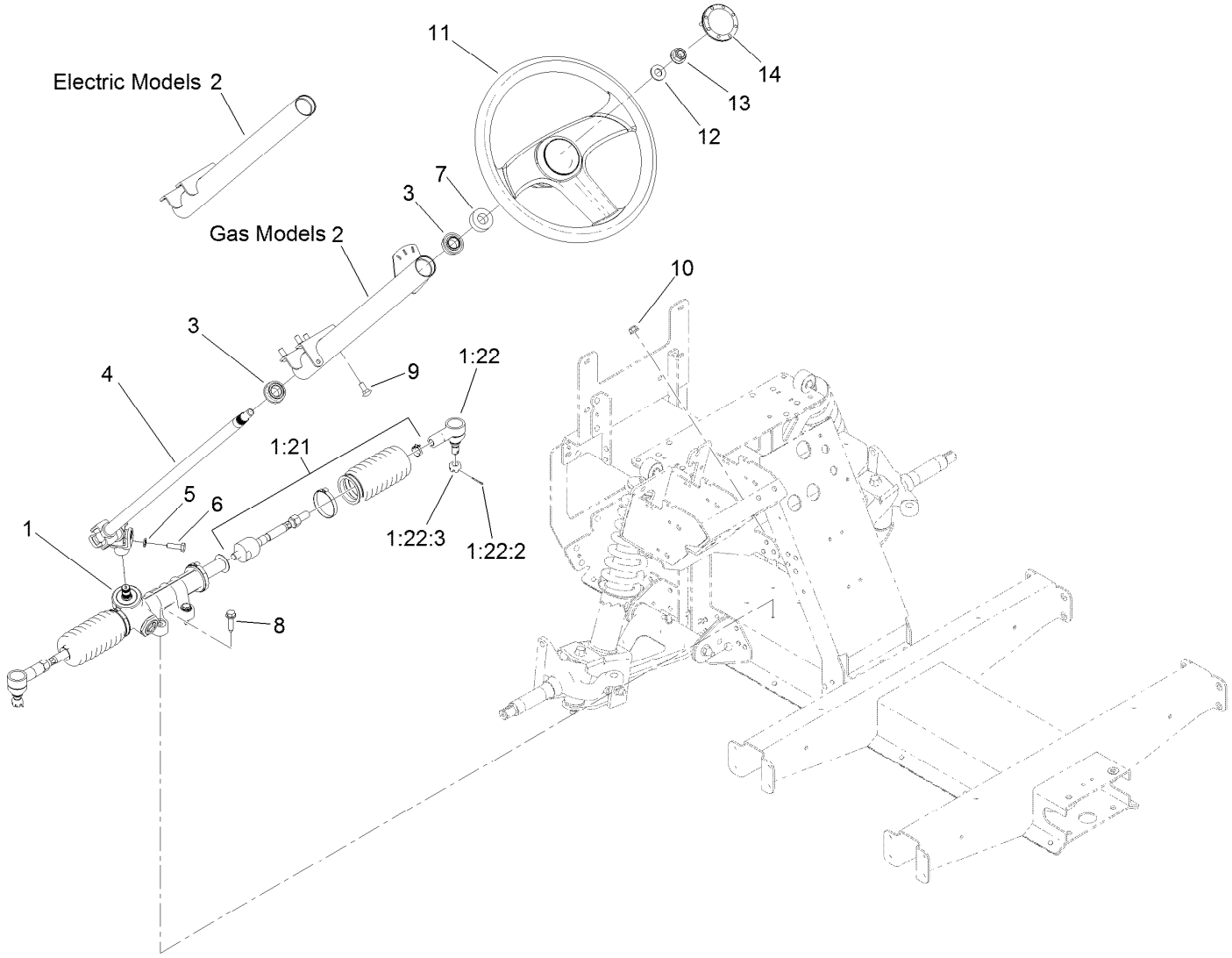


# Steering Assembly

| Ref. | Part Number | Qty. | Description |
|---|---|---|---|
| 1 | 138-0114 | 1 | Steering Rack ASM |
| 1:21 | 140-4591 | 1 | Kit-Tie Rod ASM, Gtx |
| 1:22 | 140-4592 | 1 | Kit-Rod End ASM |
| 1:22:2 | 3272-42 | 1 | Pin-Cotter |
| 1:22:3 | 140-2493 | 1 | Nut-Hex, Slotted |
| 2 | 137-2754 | 1 | Steering Column ASM |
| 3 | 112-3262 | 2 | Bearing |
| 4 | 127-8804 | 1 | Shaft-Steering |
| 5 | 3253-4 | 1 | Washer-Lock |

| Ref. | Part Number | Qty. | Description |
|---|---|---|---|
| 6 | 116-3515 | 1 | Screw-HH, Special |
| 7 | 21-9260 | 1 | Cover-Dust |
| 8 | 32144-49 | 4 | Screw-HWHTF |
| 9 | 3230-1 | 4 | Bolt-CARR |
| 10 | 104-8300 | 4 | Nut-HF, NI |
| 11 | 131-0957 | 1 | Wheel-Steering |
| 12 | 3256-26 | 1 | Washer-Flat |
| 13 | 99-5107 | 1 | Nut-Lock |
| 14 | 131-3630 | 1 | Cap-Wheel, Steering |

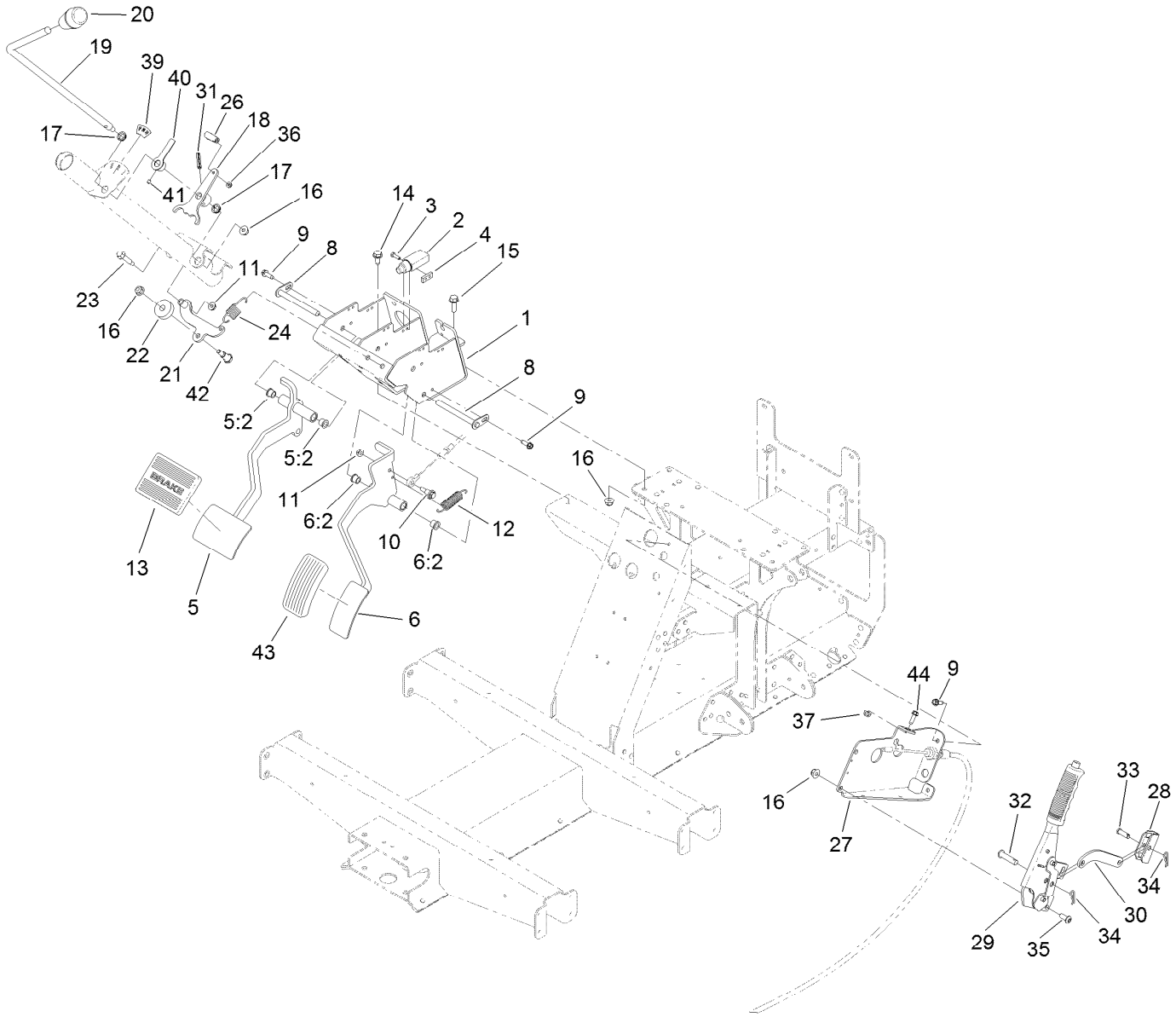


# Pedal and Control Assembly

| Ref. | Part Number | Qty. | Description |
|---|---|---|---|
| 1 | 127-8817-03 | 1 | Mount-Pedal |
| 2 | 99-7407 | 1 | Switch |
| 3 | 3290-134 | 2 | Screw |
| 4 | 1-633181 | 1 | Plate-Tapped |
| 5 | 138-9385 | 1 | Brake Pedal ASM |
| 5:2 | 256-116 | 2 | Bushing-Flange |
| 6 | 138-9390 | 1 | Throttle Pedal ASM, Gtx |
| 6:2 | 256-116 | 2 | Bushing-Flange |
| 8 | 131-8459 | 2 | Shaft-Pivot |
| 9 | 49-2040 | 4 | Screw-HWHTF |
| 10 | 104-0858 | 1 | Bolt-Shoulder |
| 11 | 32128-33 | 2 | Nut-HF |
| 12 | 67-1450 | 1 | Spring-Idler |
| 13 | 7-3900 | 1 | Pad-Brake |
| 14 | 32144-70 | 2 | Screw-HWHTF |
| 15 | 3234-29 | 1 | Screw-HHF |
| 16 | 104-8300 | 5 | Nut-HF, NI |
| 17 | 110-3318 | 2 | Bushing-Snap |
| 18 | 127-8833 | 1 | Arm-Shift |
| 19 | 127-8830 | 1 | Shaft-Shifter |
| 20 | 131-8473 | 1 | Knob-Tapered |

| Ref. | Part Number | Qty. | Description |
|---|---|---|---|
| 21 | 133-7214 | 1 | Arm-Detent |
| 22 | 133-7212 | 1 | Bushing-Detent, Shift |
| 23 | 116-6876 | 1 | Screw-Shoulder |
| 24 | 131-8419 | 1 | Spring-Extension |
| 26 | 2411-38 | 1 | Joint-Ball |
| 27 | 140-4836-03 | 1 | Mount-Park Brake |
| 28 | 87-3480 | 1 | Bracket-Equalizer, Cable |
| 29 | 131-8320 | 1 | Lever-Brake, Park |
| 30 | 144-0516 | 1 | Link-Park, Brake |
| 31 | 32121-9 | 1 | Pin-Roll, Slotted |
| 32 | 283-10 | 1 | Pin-Clevis |
| 33 | 1-808280 | 1 | Pin-Clevis |
| 34 | 1-806003 | 2 | Pin-Cotter |
| 35 | 3274-55 | 2 | Screw-HSBH |
| 36 | 3296-27 | 1 | Nut-Lock, NI |
| 37 | 104-7201 | 1 | Nut-HF, NI |
| 39 | 131-8463 | 1 | Decal-Shift |
| 40 | 131-8462-01 | 1 | Indicator-Shift |
| 41 | 3245-20 | 1 | Screw-HSH |
| 42 | 613529 | 1 | Screw-Shoulder |

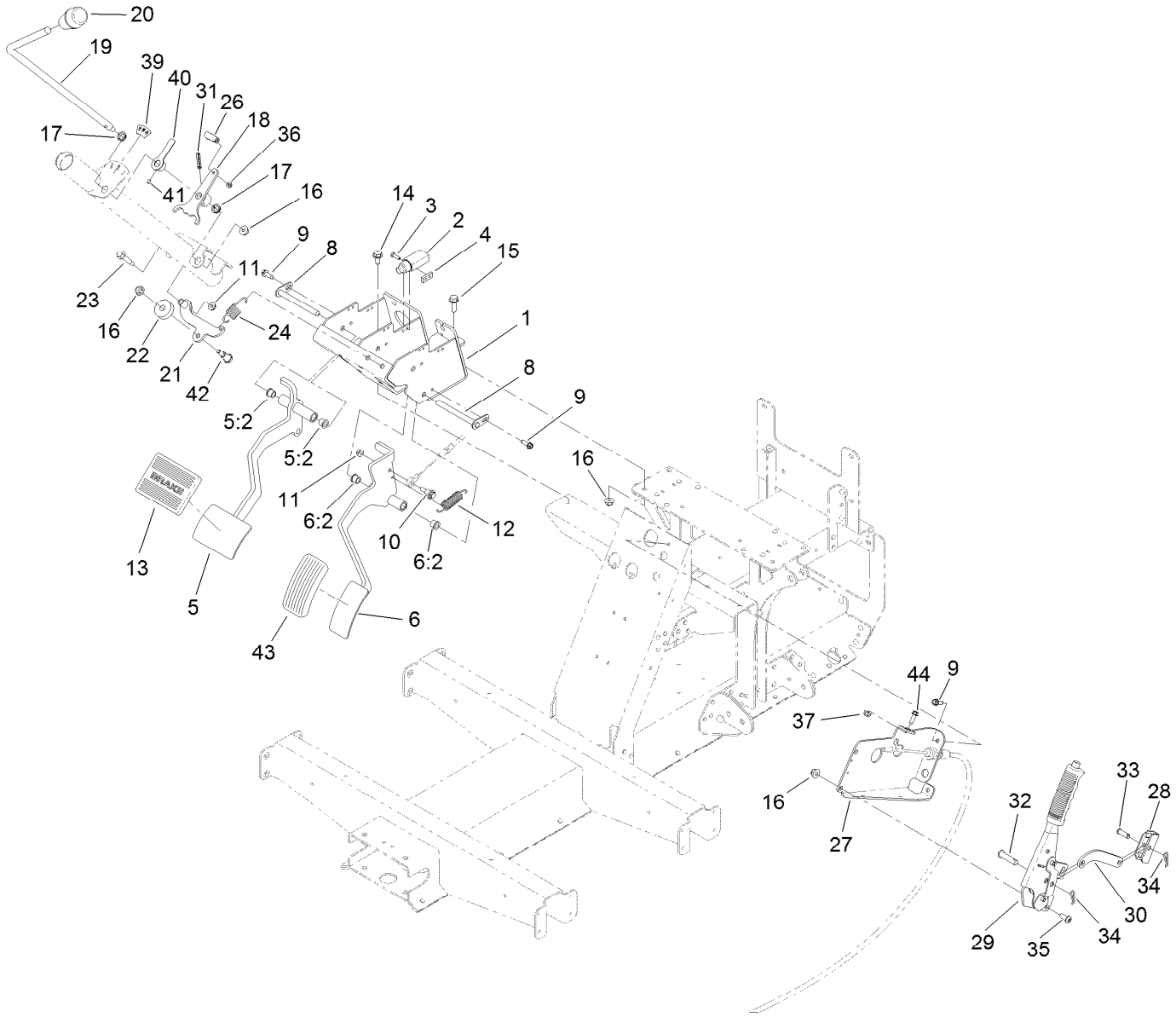


# Pedal and Control Assembly (continued)

| Ref. | Part Number | Qty. | Description |
|---|---|---|---|
| 43 | 140-4572 | 1 | Pedal Pad-Throttle |
| 44 | 115-5103 | 1 | Screw-HHF |

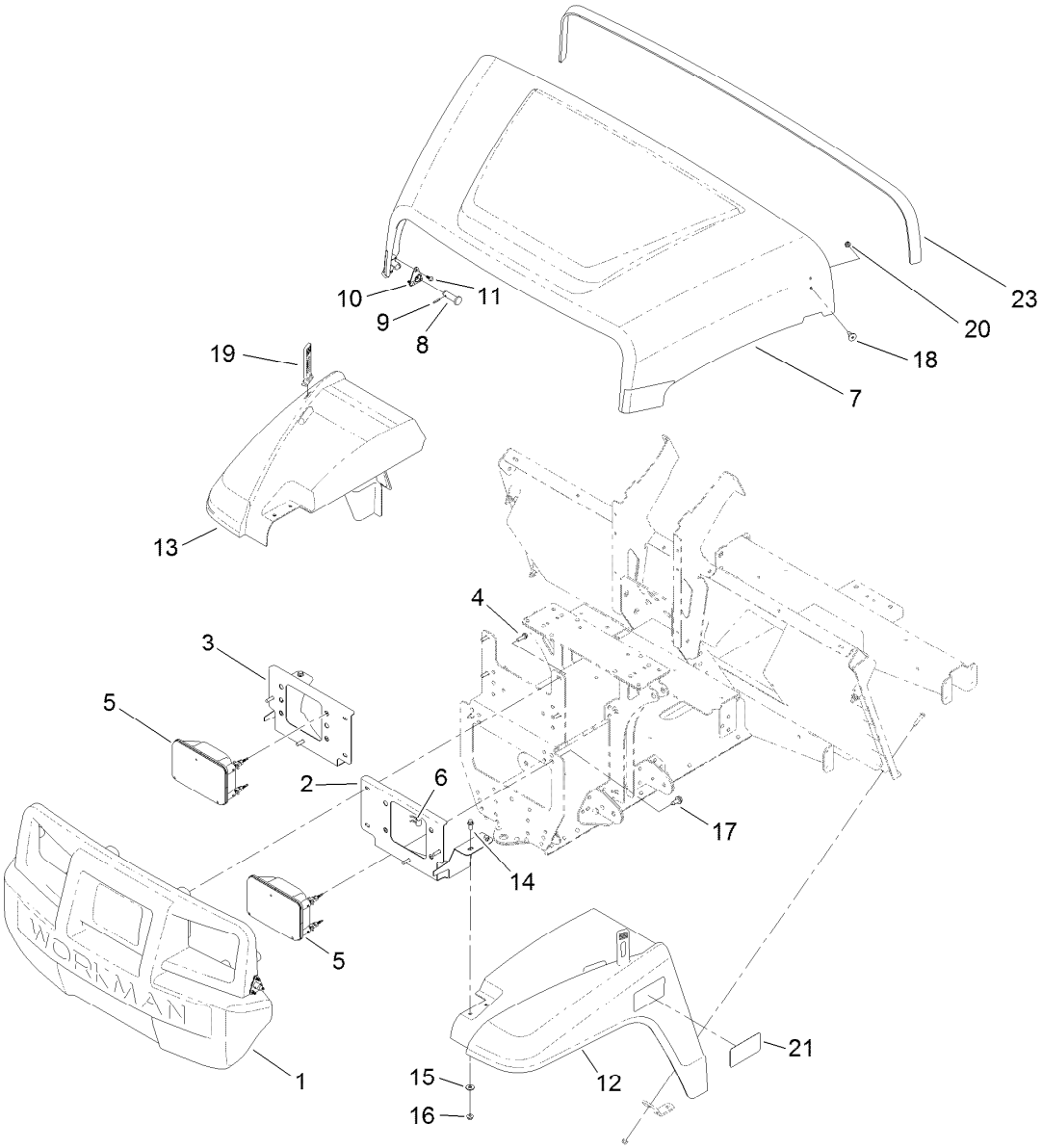


# Hood and Fender Assembly

| Ref. | Part Number | Qty. | Description |
|---|---|---|---|
| 1 | 132-8530 | 1 | Bumper |
| 2 | 131-8455-03 | 1 | Bracket-Headlight, LH |
| 3 | 131-8456-03 | 1 | Bracket-Headlight, RH |
| 4 | 46-8091 | 8 | Screw-HWH |
| 5 | 138-9260 | 2 | Headlight ASM |
| 6 | 115-2408 | 6 | Clip-Speed |
| 7 | 136-6281 | 1 | Hood |
| 8 | 117-5094 | 2 | Pin-Clevis |
| 9 | 32121-50 | 2 | Pin-Spring |
| 10 | 112-3308 | 2 | Retainer-Pin |
| 11 | 121-9605 | 6 | Screw-HWH |

| Ref. | Part Number | Qty. | Description |
|---|---|---|---|
| 12 | 127-7771 | 1 | Fender-Front, LH |
| 13 | 127-7772 | 1 | Fender-Front, RH |
| 14 | 3234-33 | 4 | Screw-HHF |
| 15 | 3256-2 | 4 | Washer-Flat |
| 16 | 104-7201 | 4 | Nut-HF, NI |
| 17 | 32144-70 | 2 | Screw-HWHTF |
| 18 | 125-1122 | 2 | Screw |
| 19 | 131-8402 | 2 | Strap-Down, Hold |
| 20 | 3296-56 | 2 | Nut-Lock, NI |
| 21 | 138-3527 | 2 | Decal-Fender |
| 23 | 133-7210 | 1 | Seal-Trim, Hood |

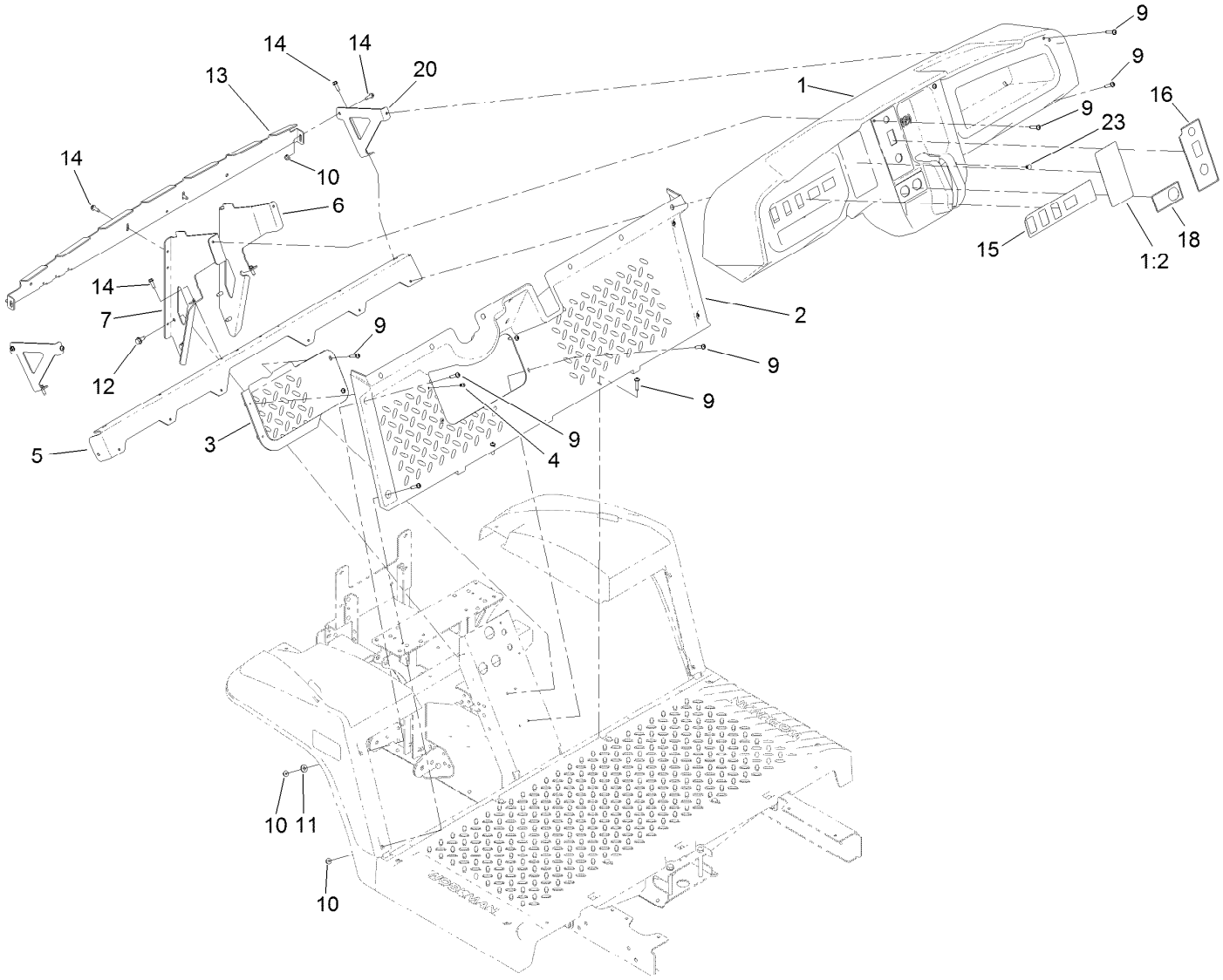


# Dash Assembly

| Ref. | Part Number | Qty. | Description |
|---|---|---|---|
| 1 | 131-8593 | 1 | Dash |
| 1:2 | 131-8414 | 1 | Decal-Danger |
| 2 | 127-7846 | 1 | Footboard |
| 3 | 127-7847 | 1 | Cover-Footboard |
| 4 | 107-7461 | 2 | Screw-Plastite |
| 5 | 127-7831-03 | 1 | Angle |
| 6 | 131-8336-03 | 1 | Bracket-Dash, RH |
| 7 | 131-8335-03 | 1 | Bracket-Dash, LH |
| 9 | 132-6777 | 20 | Screw-TTH |
| 10 | 104-7201 | 6 | Nut-HF, NI |

| Ref. | Part Number | Qty. | Description |
|---|---|---|---|
| 11 | 3256-2 | 2 | Washer-Flat |
| 12 | 32144-70 | 4 | Screw-HWHTF |
| 13 | 131-8568-03 | 1 | Reinforcement-Dash |
| 14 | 49-2040 | 8 | Screw-HWHTF |
| 15 | 138-3524 | 1 | Decal-Dashboard |
| 16 | 138-3397 | 1 | Decal-Control Panel, EFI |
| 18 | 131-8493 | 1 | Decal-USB |
| 20 | 131-8569-03 | 2 | Bracket-Dash, Side |
| 23 | 104-9368 | 1 | Plug-Dome |

Reference Model 07048 For Bucket Seat Base Kit Parts

Reference Model 07047 For Bench Seat Base Kit Parts

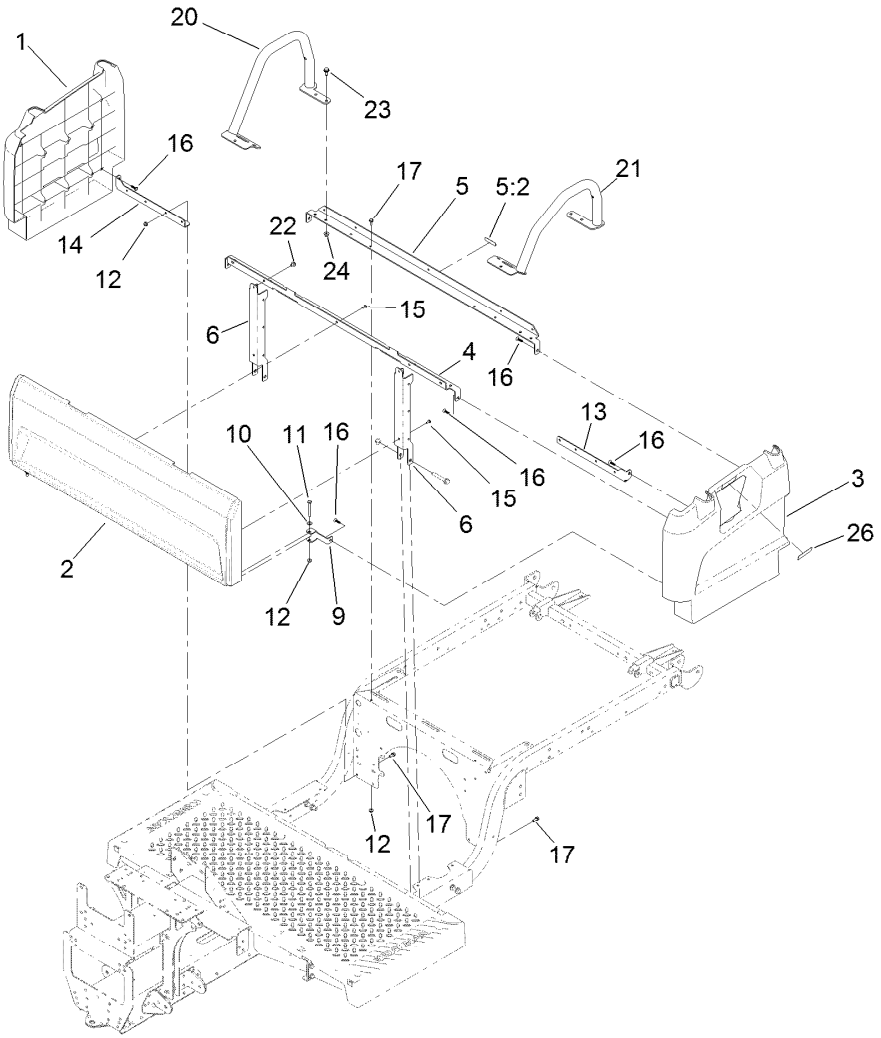


# Seatbase Assembly

| Ref. | Part Number | Qty. | Description |
|---|---|---|---|
| 1 | 127-7805 | 1 | Side-Base, Seat (RH) |
| 2 | 133-7188 | 1 | Panel-Base, Seat |
| 3 | 127-7807 | 1 | Side-Base, Seat (LH) |
| 4 | 133-7345-03 | 1 | Support-Seat |
| 5 | 137-6991 | 1 | Seat Support ASM |
| 5:2 | 120-9570 | 1 | Decal-Warning |
| 6 | 127-7841-03 | 2 | Channel-Support, Seat |
| 9 | 127-7844-03 | 2 | Clamp-Plate, Floor |
| 10 | 3256-22 | 2 | Washer-Flat |
| 11 | 321-18 | 2 | Screw-HH |
| 12 | 104-7201 | 8 | Nut-HF, NI |

| Ref. | Part Number | Qty. | Description |
|---|---|---|---|
| 13 | 127-7842-03 | 1 | Bracket-Support, Side (LH) |
| 14 | 127-7843-03 | 1 | Bracket-Support, Side (RH) |
| 15 | 112-6349 | 5 | Screw-HWH |
| 16 | 120-2349 | 8 | Screw |
| 17 | 3234-33 | 6 | Screw-HHF |
| 20 | 131-8352-05 | 1 | Restraint-Hip, RH |
| 21 | 131-8353-05 | 1 | Restraint-Hip, LH |
| 22 | 46-6810 | 2 | Screw And Washer ASM |
| 23 | 32144-70 | 6 | Screw-HWHTF |
| 24 | 104-8300 | 6 | Nut-HF, NI |
| 26 | 131-8410 | 1 | Decal-Danger, Fuel |

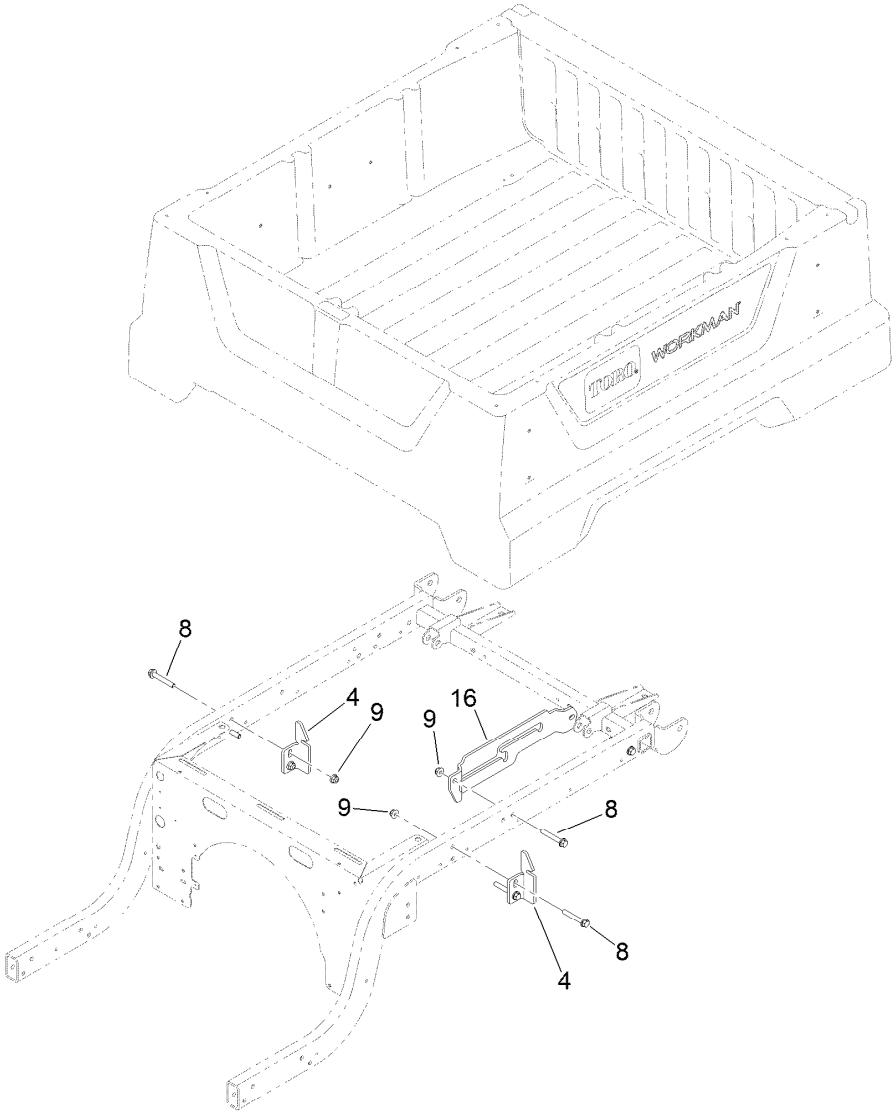


# Cargo Bed Assembly

| Ref. | Part Number | Qty. | Description |
|---|---|---|---|
| 4 | 127-7428-03 | 2 | Striker-Latch, Bed |
| 8 | 3234-39 | 6 | Screw-HHF |
| 9 | 104-8301 | 6 | Nut-HF, NI |
| 16 | 132-8518 | 1 | Bracket-Rod, Prop |

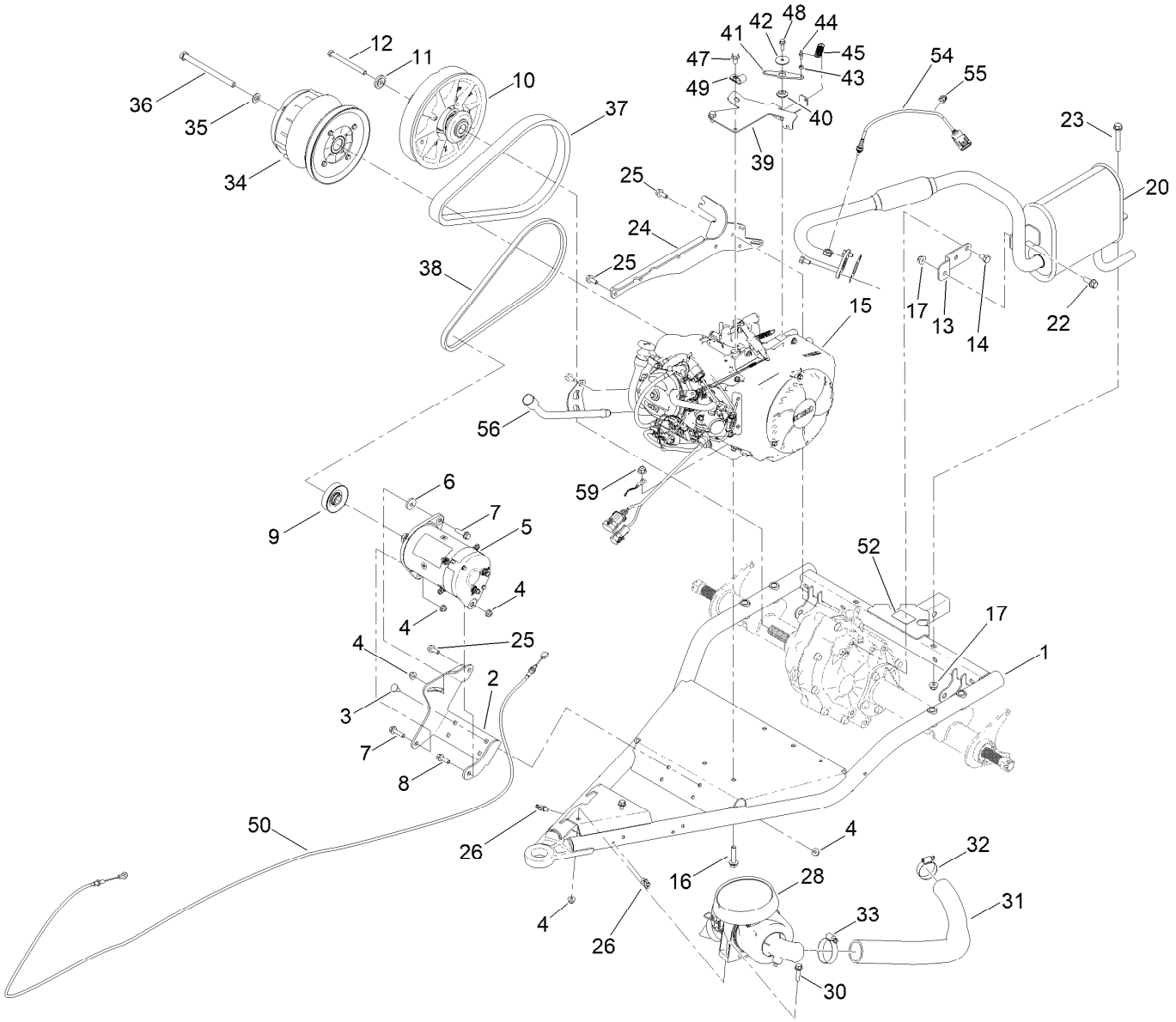


# Engine Assembly

| Ref. | Part Number | Qty. | Description |
|---|---|---|---|
| 1 | 140-2558-03 | 1 | Gtx Swing Arm ASM |
| 2 | 131-8503-03 | 1 | Bracket-Starter/Generator |
| 3 | 3230-23 | 4 | Bolt-CARR |
| 4 | 104-8300 | 9 | Nut-HF, NI |
| 5 | 131-8444 | 1 | Starter/Generator ASM |
| 6 | 65-8270 | 1 | Washer |
| 7 | 119-4036 | 2 | Screw-HHF |
| 8 | 3234-29 | 1 | Screw-HHF |
| 9 | 121-6277 | 1 | Pulley-Drive |
| 10 | 119-6011 | 1 | Secondary Clutch ASM |
| 11 | 104-6563 | 1 | Washer-Stepped |
| 12 | 119-0723 | 1 | Screw-HH, Lock |
| 13 | 131-8329 | 1 | Bracket-Muffler |
| 14 | 70-8470 | 2 | Screw-HH |
| 15 | 133-8092 | 1 | Engine-Kohler, Ech440 |
| 16 | 140-4808 | 4 | Screw-HHF |
| 17 | 104-8301 | 2 | Nut-HF, NI |
| 20 | 138-9275 | 1 | Exhaust ASM |
| 22 | 3234-42 | 1 | Screw-HHF |
| 23 | 3234-39 | 1 | Screw-HHF |
| 24 | 140-4648 | 1 | Plate-Spanner |

| Ref. | Part Number | Qty. | Description |
|---|---|---|---|
| 25 | 139-3392 | 6 | Screw-Lock |
| 26 | 32180-030 | 2 | Clip-Tie |
| 28 | 138-3447 | 1 | Air Cleaner ASM |
| 30 | 3234-36 | 2 | Screw-HHF |
| 31 | 131-8489 | 1 | Hose-Intake, Air |
| 32 | 2412-111 | 1 | Clamp-Hose, W/Liner |
| 33 | 2412-92 | 1 | Clamp-Hose |
| 34 | 138-0095 | 1 | Primary Clutch ASM |
| 35 | 3256-25 | 1 | Washer-Flat |
| 36 | 131-8521 | 1 | Screw-HH |
| 37 | 131-8567 | 1 | Belt-Variable |
| 38 | 94-8803 | 1 | V-Belt, Impeller |
| 39 | 131-8505 | 1 | Bracket-Throttle |
| 40 | 131-8524 | 1 | Bushing-Flange |
| 41 | 131-8504 | 1 | Lever-Throttle |
| 42 | 3256-55 | 1 | Washer-Flat |
| 43 | 110-2619 | 1 | Keeper-Spring |
| 44 | 99-7847 | 1 | Ball-Stud |
| 45 | 71-5470 | 1 | Spring-Brake |
| 47 | 33104-016 | 2 | Screw-HHF |
| 48 | 33103-020 | 1 | Screw-HHF |

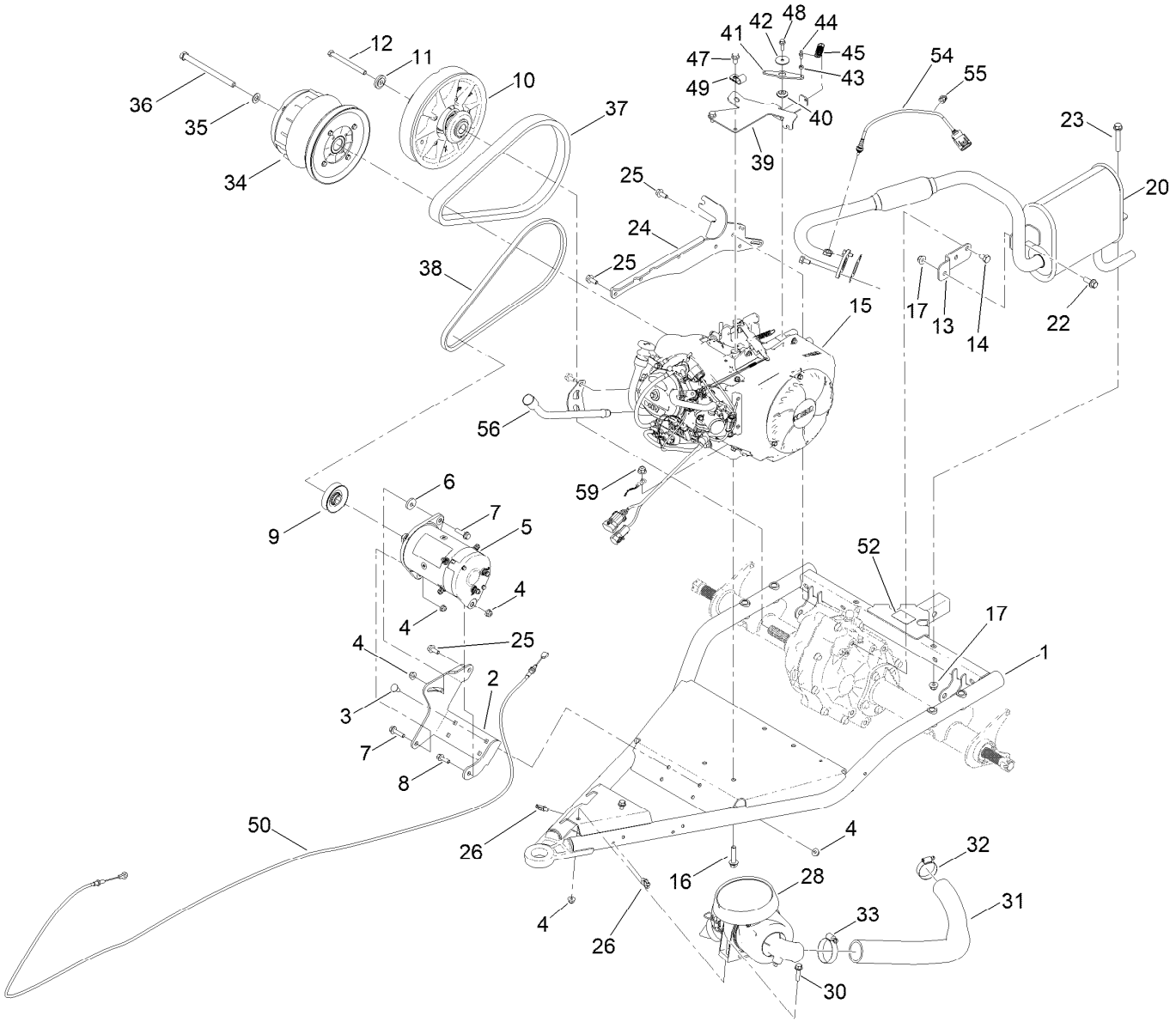


# Engine Assembly (continued)

| Ref. | Part Number | Qty. | Description |
|---|---|---|---|
| 49 | 2412-138 | 1 | R-Clamp |
| 50 | 127-8860 | 1 | Cable-Accelerator |
| 52 | 137-9984 | 1 | Decal-Load, Towing |
| 54 | 136-6348 | 1 | Sensor-O2 |
| 55 | 32180-226 | 1 | Clip-Edge, Parallel W/Tie |
| 56 | 140-4595 | 1 | Dip Stick Tube ASM |
| 59 | 139-3380 | 4 | Nut-HF |

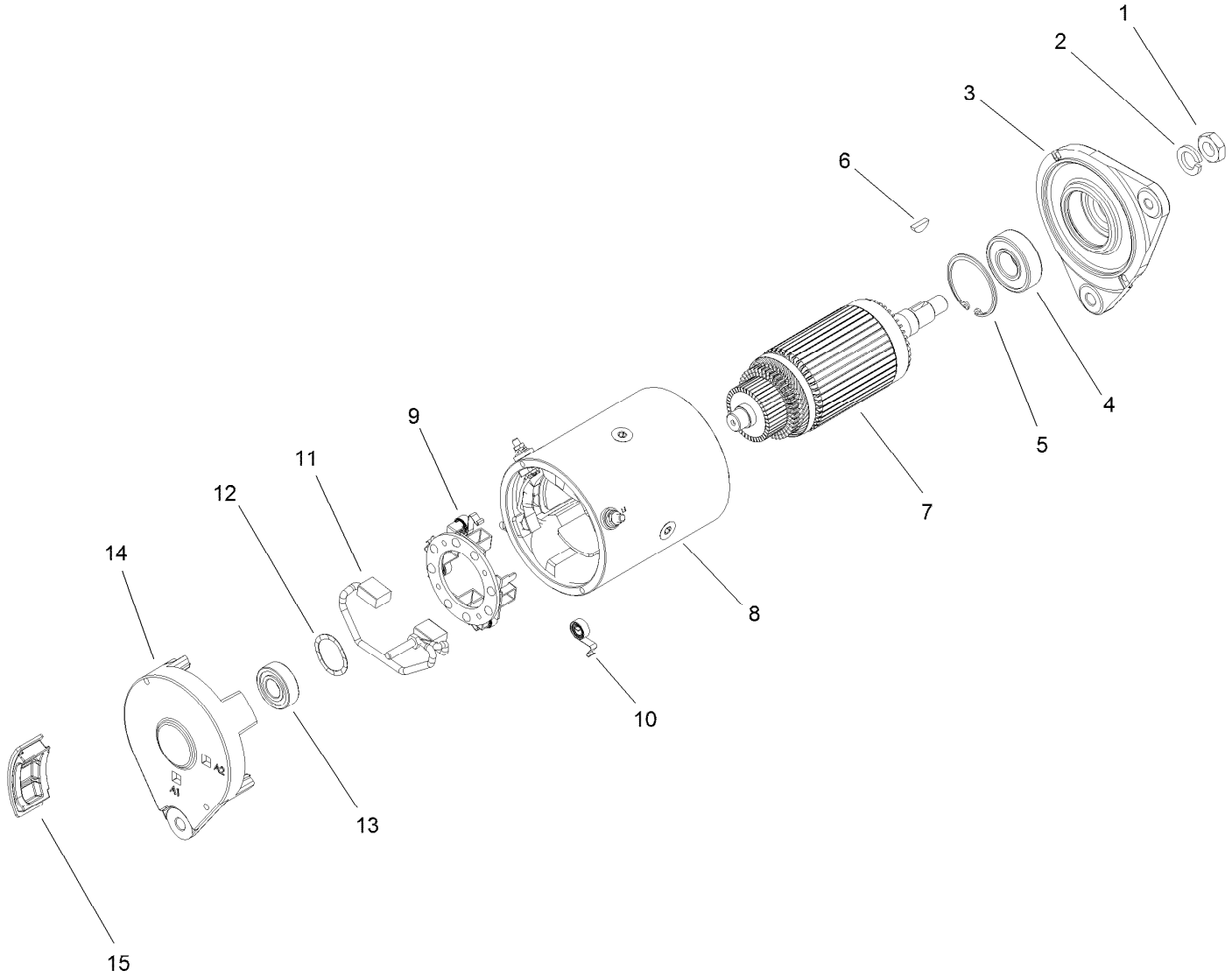


# Starter Generator Assembly No. 131-8444

| Ref. | Part Number | Qty. | Description |
|---|---|---|---|
| 1 | 119-9651 | 1 | Nut |
| 2 | 119-9652 | 1 | Washer-Lock |
| 3 | 133-0599 | 1 | Head-Drive End |
| 4 | 119-9655 | 1 | Bearing |
| 5 | 119-9656 | 1 | Ring-Retaining |
| 6 | 119-9657 | 1 | Key-Woodruff |
| 7 | 119-9658 | 1 | Armature ASM |
| 8 | | 1 | Frame And Field Assembly ● |
| 9 | 119-9661 | 1 | Brush Box ASM |
| 10 | 119-9660 | 4 | Spring-Brush |
| 11 | 119-9659 | 1 | Brush Lead And Terminal Service Kit |
| 12 | 119-9662 | 1 | Washer-Wave |
| 13 | 119-9663 | 1 | Bearing |
| 14 | | 1 | Head-End, Cummutator ● |
| 15 | 133-0600 | 4 | Plug-Rubber |

● Not serviced separately

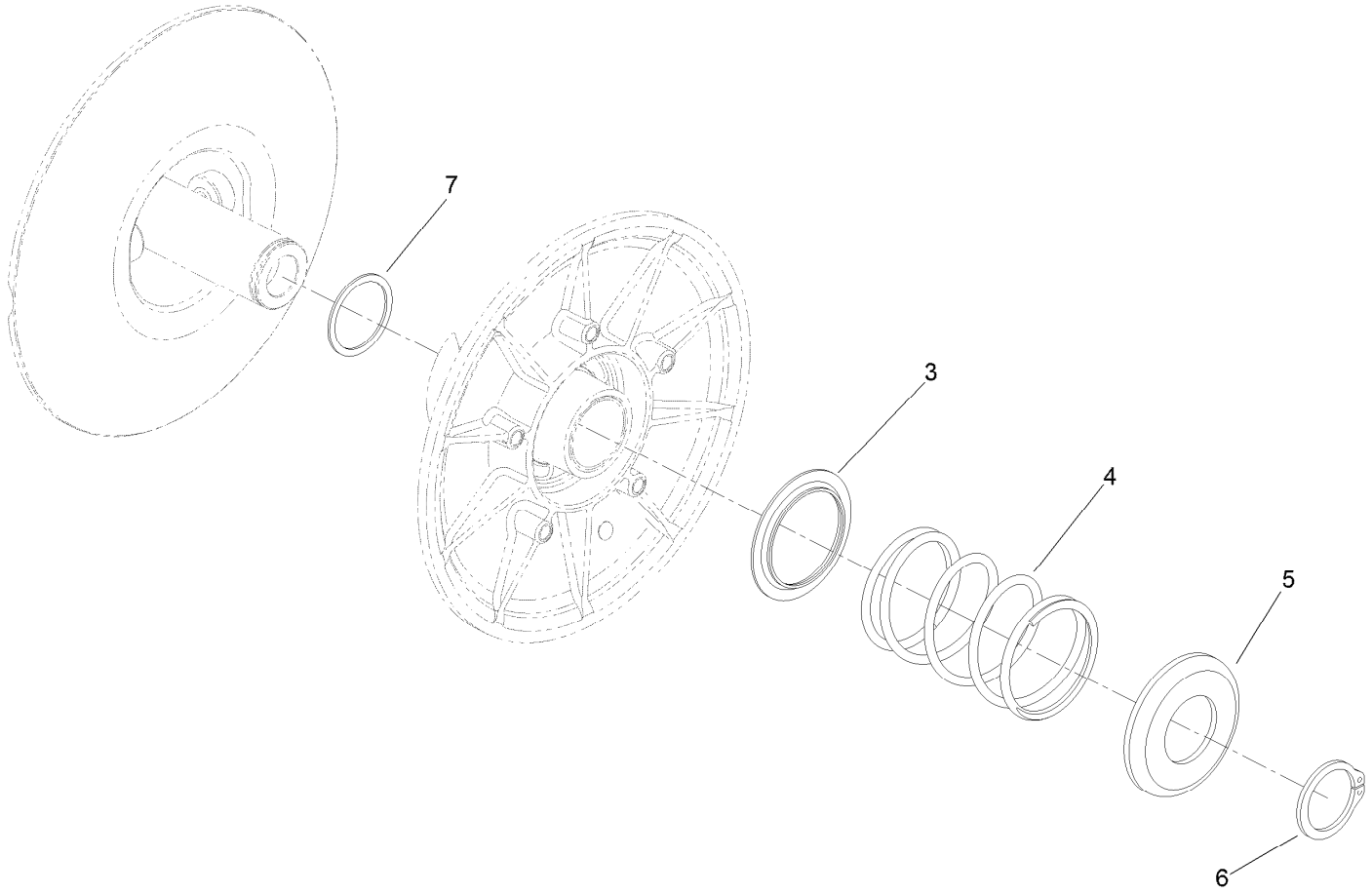


# Secondary Clutch Assembly No. 119-6011

| *Ref.* | *Part Number* | *Qty.* | *Description* |
|---|---|---|---|
| 3 | 119-0809 | 1 | Cup-Spring Retainer, Inner |
| 4 | 119-9360 | 1 | Spring-Compression, Black/Almond |
| 5 | 119-0810 | 1 | Cup-Spring Retainer, Outer |
| 6 | 119-0811 | 1 | Ring-Retaining |
| 7 | 119-6018 | 1 | Shim-Thrust |

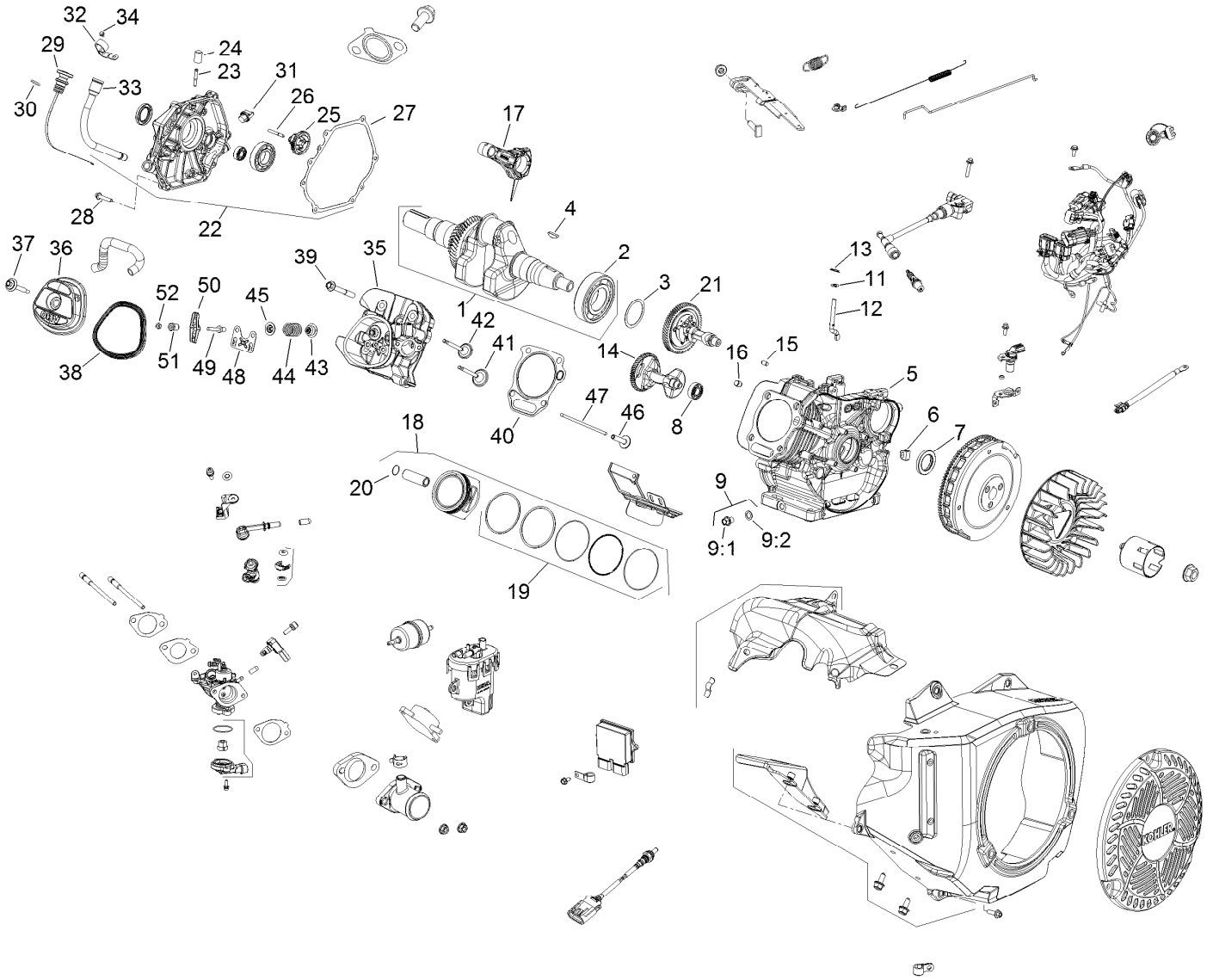


# Engine Assembly No. 133-8092

| Ref. | Part Number | Qty. | Description |
|---|---|---|---|
| 1 | 136-4909 | 1 | Crankshaft ASM |
| 2 | 136-4918 | 2 | Bearing-Crankshaft |
| 3 | 136-4917 | 4 | Bearing-Shaft, Balance |
| 4 | 136-4906 | 1 | Key-Flywheel |
| 5 | | 1 | Crankcase (Not Serviced) ■ |
| 6 | 136-4957 | 1 | Grommet-Crankcase |
| 7 | 136-4920 | 2 | Seal-Crankshaft |
| 8 | 136-4916 | 2 | Adapter-Inlet, Air |
| 9 | 136-4942 | 2 | Drain Plug Kit |
| 9:1 | | 1 | Plug-Drain ■ |
| 9:2 | 136-4967 | 1 | Washer-Plug, Drain |
| 11 | 136-4968 | 2 | Washer-Flat |
| 12 | 136-4944 | 1 | Shaft-Cross, Governor |
| 13 | 136-4904 | 1 | Clip-Shaft, Governor |
| 14 | 136-4945 | 1 | Shaft-Balance |
| 15 | 136-4965 | 2 | Pin-Dowel |
| 16 | 136-4964 | 2 | Pin-Dowel, Cylinder Head |
| 17 | 140-2401 | 1 | Connecting Rod ASM |

| Ref. | Part Number | Qty. | Description |
|---|---|---|---|
| 18 | 136-4977 | 1 | Piston W/Ring Set (STD) |
| 18 | 136-4978 | 1 | Piston Kit (0.25 Os) |
| 18:1 | | 1 | Piston (STD) ● ■ |
| 18:1 | | 1 | Piston (0.25 Os) ● ■ |
| 18:2 | 136-4937 | 1 | Ring Set ● |
| 18:2 | | 1 | Ring Set (0.25 Os) ● ■ |
| 18:3 | 136-4913 | 2 | Retainer-Piston ● |
| 18:3 | 136-4913 | 2 | Retainer-Piston ● |
| 18:4 | | 1 | Wrist Pin ● ■ |
| 18:4 | | 1 | Pin-Wrist ● ■ |
| 19 | 136-4937 | 2 | Ring Set |
| 20 | 136-4913 | 2 | Retainer-Piston |
| 21 | 136-4908 | 1 | Camshaft ASM |
| 22 | 140-2402 | 1 | Kit-Closure Plate |
| 23 | 136-4955 | 1 | Fitting-Pump, Pulse |
| 24 | 140-2403 | 1 | Cap-Masking |
| 25 | 136-4956 | 1 | Governor ASM |
| 26 | 136-4943 | 1 | Shaft-Gear, Governor |

● Not illustrated

■ Not serviced separately

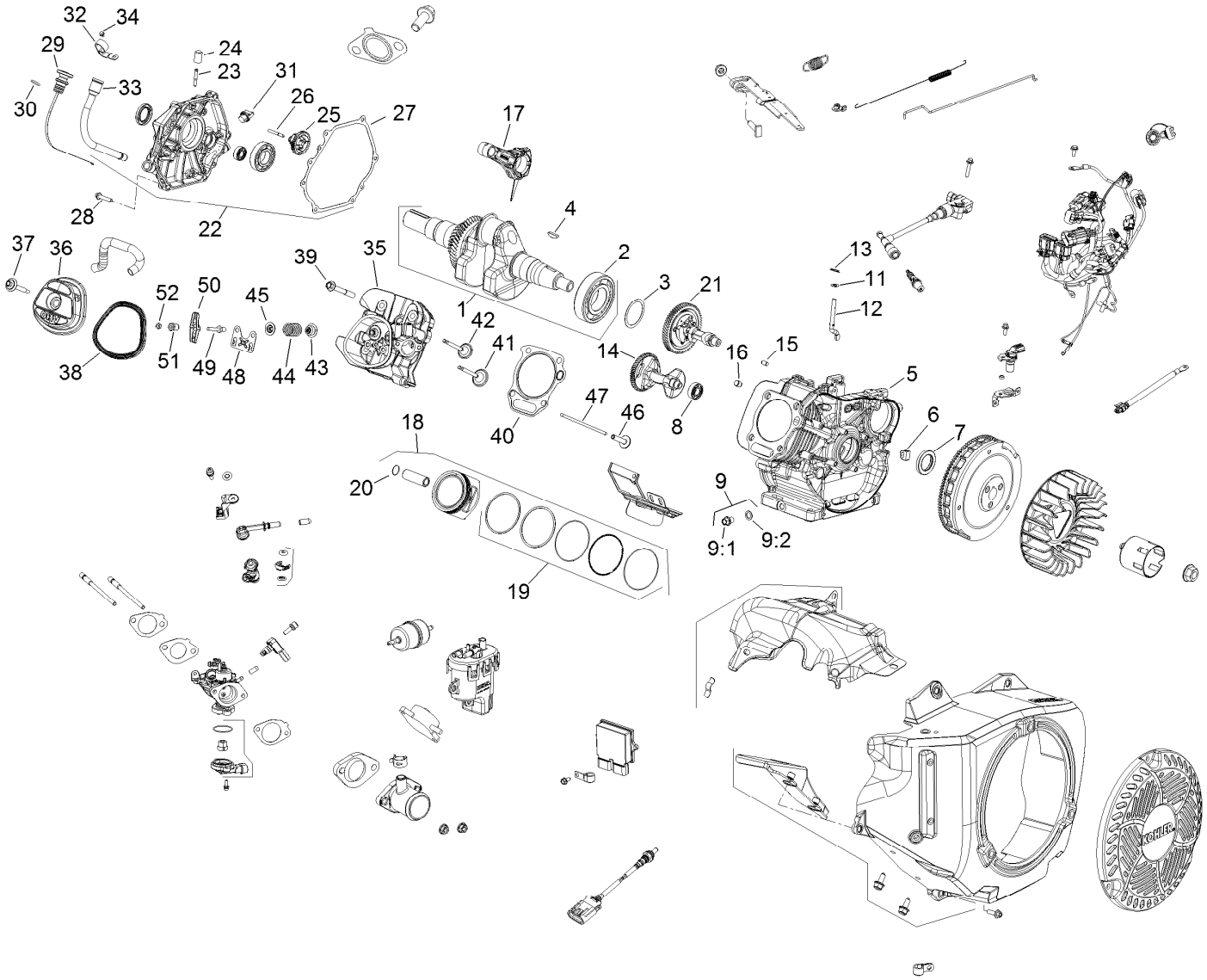


# Engine Assembly No. 133-8092 (continued)

| Ref. | Part Number | Qty. | Description |
|---|---|---|---|
| 27 | 136-4923 | 1 | Gasket-Plate, Closure |
| 28 | 136-4983 | 7 | Screw-Plate, Closure |
| 29 | 140-2404 | 1 | Dipstick ASM |
| 30 | 140-2405 | 1 | O-Ring-Dipstick Cap |
| 31 | 136-4952 | 1 | Oil Fill Cap ASM |
| 31:1 | | 1 | Oil Fill Cap ●■ |
| 31:2 | | 1 | Gasket ●■ |
| 32 | 140-2406 | 1 | Bracket-Dipstick Tube |
| 33 | 140-4595 | 1 | Dip Stick Tube ASM |
| 34 | 136-4991 | 1 | Screw-HF |
| 35 | 136-4961 | 1 | Cylinder Head Kit |
| 35:1 | | 1 | Head-Cylinder ●■ |
| 35:2 | 136-4929 | 2 | Stud-Intake ● |
| 36 | 136-4935 | 1 | Valve Cover Kit |
| 36:1 | | 1 | Cover-Valve ●■ |
| 36:2 | 136-4927 | 1 | Gasket-Cover, Valve ● |
| 36:3 | 136-4988 | 1 | Screw (Valve Cover Seal ASM) ● |
| 36:3:1 | | 1 | Screw-Cover, Valve ●■ |
| 36:3:2 | | 1 | Gasket-Screw, Valve Cover ●■ |
| 37 | 136-4988 | 1 | Screw (Valve Cover Seal ASM) |
| 37:1 | | 1 | Screw-Cover, Valve ●■ |
| 37:2 | | 1 | Gasket-Screw, Valve Cover ●■ |
| 38 | 136-4927 | 1 | Gasket-Cover, Valve |
| 39 | 140-2407 | 4 | Screw-Hex Flange |
| 40 | 140-2408 | 1 | Head Gasket Kit |
| 41 | 136-4911 | 1 | Valve-Intake |
| 42 | 136-4912 | 1 | Retainer-Spring, Valve |
| 43 | 136-4919 | 2 | Seal-Stem, Valve |
| 44 | 136-4931 | 2 | Spring-Valve |
| 45 | 136-4912 | 2 | Retainer-Spring, Valve |
| 46 | 136-4963 | 2 | Lifter-Valve |
| 47 | 136-4966 | 2 | Rod-Push |

● Not illustrated

■ Not serviced separately

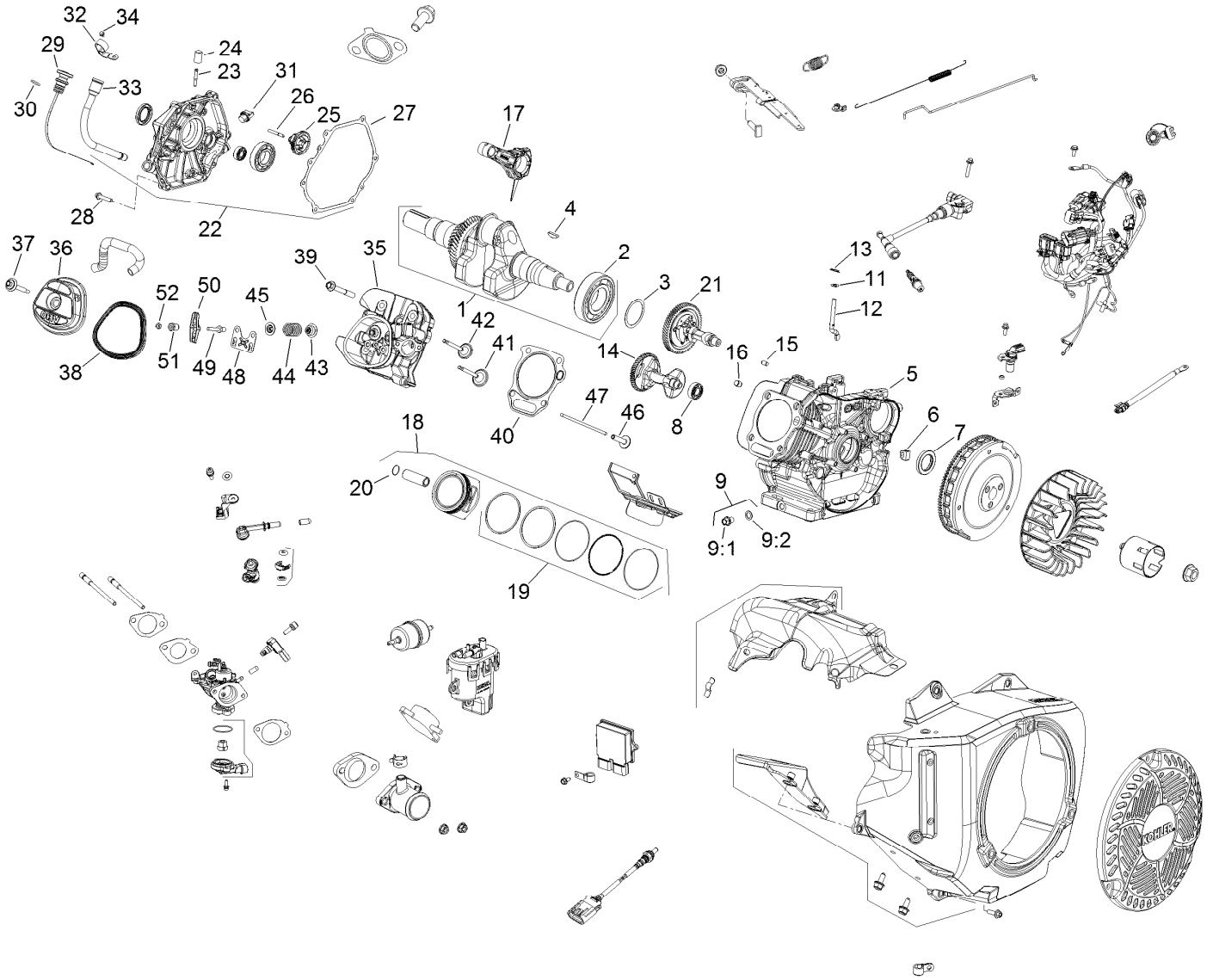


# Engine Assembly No. 133-8092 (continued)

| Ref. | Part Number | Qty. | Description |
|---|---|---|---|
| 48 | 136-4946 | 1 | Plate-Guide, Pushrod |
| 49 | 136-4900 | 2 | Stud-Arm, Rocker |
| 50 | 136-4953 | 2 | Arm-Rocker |
| 51 | 136-4907 | 2 | Pivot-Arm, Rocker |
| 52 | 136-4901 | 2 | Nut-HJ |

● Not illustrated

■ Not serviced separately

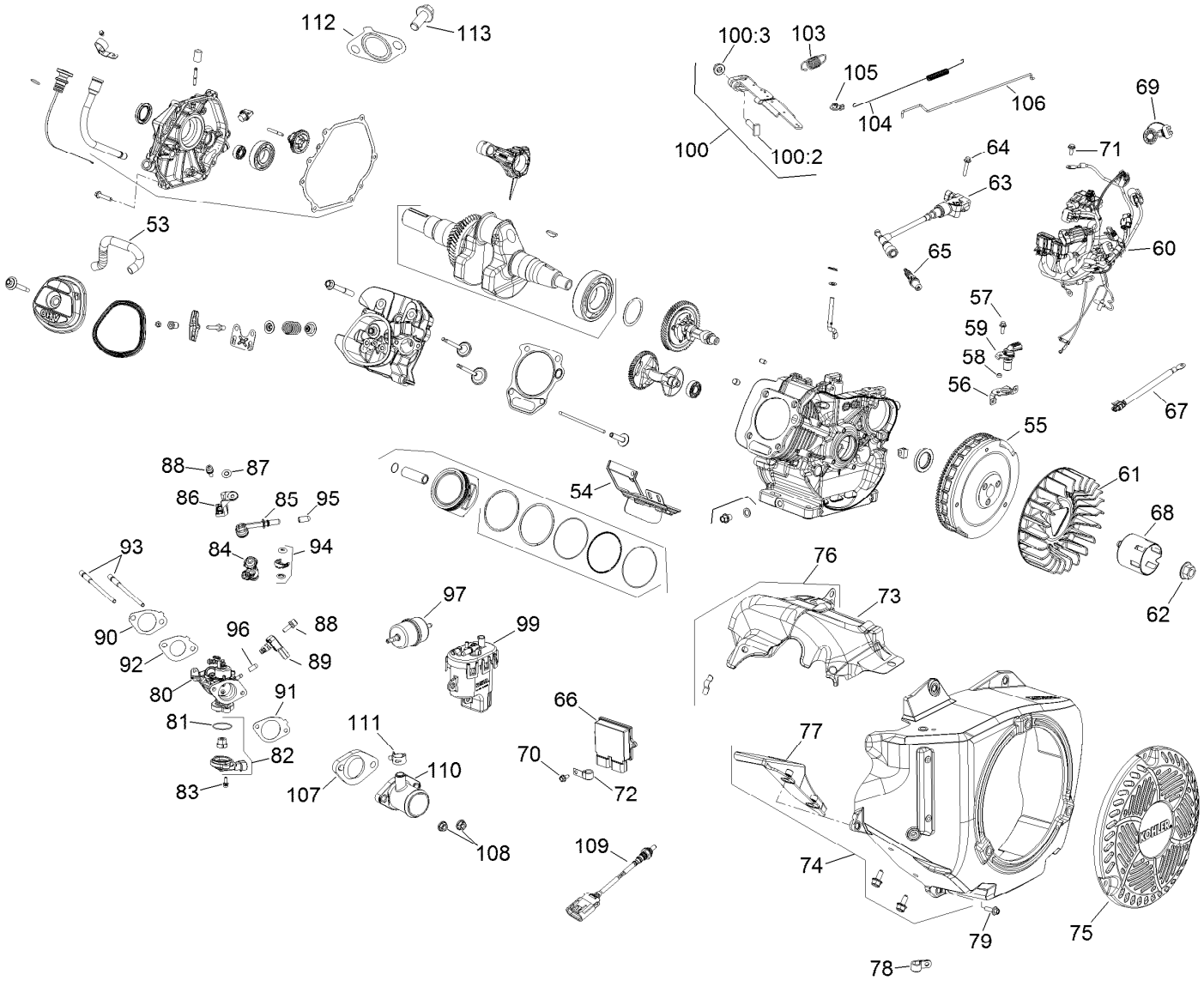


# Engine Assembly No. 133-8092

| Ref. | Part Number | Qty. | Description |
|---|---|---|---|
| 53 | 136-4962 | 1 | Hose-Breather |
| 54 | 140-2409 | 1 | Cylinder Shield ASM |
| 55 | 140-2410 | 1 | Flywheel ASM |
| 56 | 140-2411 | 1 | Bracket-Crank Sensor |
| 57 | 140-2412 | 1 | Screw-Hex Flange |
| 58 | 140-2413 | 1 | Spacer |
| 59 | 140-2414 | 1 | Sensor-Speed |
| 60 | 140-2415 | 1 | Wiring Harness ASM |
| 61 | 136-4949 | 1 | Fan-Flywheel |
| 62 | 136-4936 | 1 | Nut-Flywheel |
| 63 | 140-2416 | 1 | Coil-Ignition, EFI |
| 64 | 140-2417 | 1 | Screw-Hex Flange, M6 |
| 65 | 131-8589 | 1 | Spark Plug |
| 66 | 140-2419 | 1 | Module-Ecu |
| 67 | 140-2420 | 1 | Lead-Sensor, Temp |
| 68 | 136-4938 | 1 | Cup-Drive, Starter |
| 69 | 140-2421 | 2 | Cap-Connector |
| 70 | 136-4979 | 9 | Screw-HF |

| Ref. | Part Number | Qty. | Description |
|---|---|---|---|
| 71 | 140-2422 | 3 | Screw-M6 X 16 |
| 72 | 140-2423 | 1 | Clip-Cable |
| 73 | 140-2424 | 1 | Shield-Heat, Upper |
| 74 | 140-2425 | 1 | Blower Housing Kit |
| 75 | 136-4950 | 1 | Screen-Housing, Blower |
| 76 | 140-2426 | 1 | Heat Shield Sm |
| 77 | 136-4958 | 1 | Flywheel Finger Guard ASM |
| 78 | 140-2427 | 1 | Clamp-Insulated |
| 79 | 136-4982 | 5 | Screw |
| 80 | 140-2428 | 1 | Throttle Body And Gasket Kit |
| 81 | 140-2429 | 1 | O-Ring |
| 82 | 140-2430 | 1 | Tps Kit |
| 83 | 140-2431 | 2 | Screw-Hexalob Sems M4 X 0.7 |
| 84 | 140-2432 | 1 | Injector-Fuel |
| 85 | 140-2433 | 2 | Cap-Fuel Injector |
| 86 | 140-2434 | 1 | Fuel Cap Bracket ASM |

● Not illustrated

■ Not serviced separately

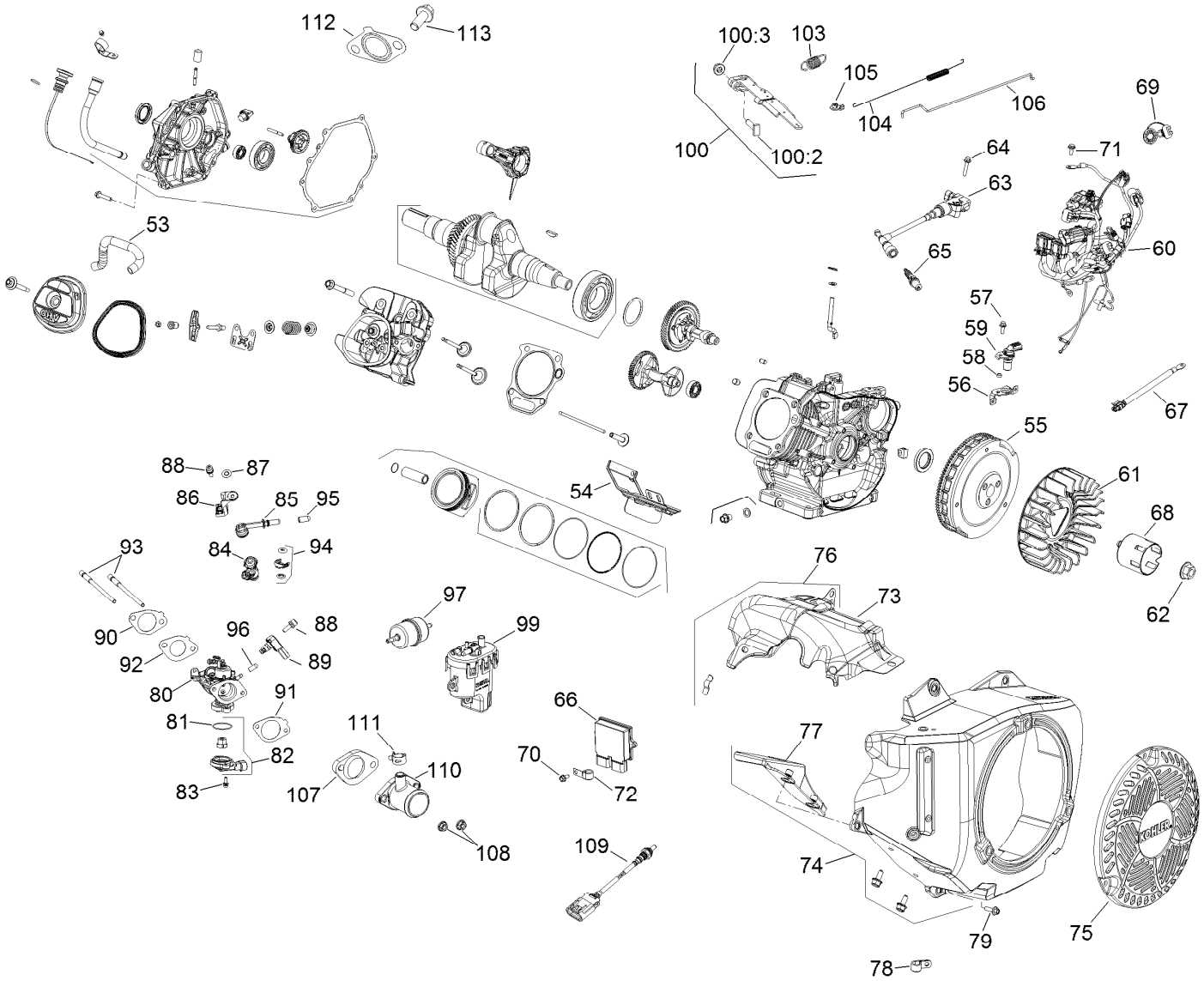


# Engine Assembly No. 133-8092 (continued)

| Ref. | Part Number | Qty. | Description |
|---|---|---|---|
| 87 | 140-2435 | 1 | Clip-Retainer |
| 88 | 140-2436 | 2 | Screw-Hexalob Sems M6 X 1 |
| 89 | 140-2437 | 1 | Sensor-Tmap |
| 90 | 136-4924 | 1 | Intake Gasket Kit |
| 90:1 | | 1 | Gasket (Insulator To Head) ●■ |
| 90:2 | 136-4925 | 1 | Gasket (Carb To Insulator) ● |
| 90:3 | 136-4926 | 1 | Gasket-Cleaner, Air ● |
| 91 | 140-2438 | 1 | Gasket-Throttle Body |
| 92 | 140-2439 | 1 | Gasket-Insulator, T-Body |
| 93 | 136-4929 | 2 | Stud-Intake |
| 94 | 140-2440 | 1 | Fuel Injector O-Ring Kit |
| 95 | 140-2441 | 1 | Cap-Masking |
| 96 | 140-2442 | 1 | Cap-Masking |
| 97 | 140-2443 | 1 | Filter-Fuel |
| 99 | 140-2452 | 1 | Fuel Pump Module Kit-World Wide |

| Ref. | Part Number | Qty. | Description |
|---|---|---|---|
| 100 | 136-4934 | 1 | Governor Lever Kit |
| 100:1 | | 1 | Lever-Governor ●■ |
| 100:2 | 136-4980 | 1 | Screw-Rect Head |
| 100:3 | 136-4902 | 1 | Nut-HF |
| 103 | 136-4933 | 1 | Spring-Governor |
| 104 | 140-2446 | 1 | Spring-Linkage |
| 105 | 140-2447 | 1 | Bushing-Linkage Retainer |
| 106 | 140-2448 | 1 | Linkage-Governor |
| 107 | 140-2449 | 1 | Insulator-Throttle Body |
| 108 | 136-4903 | 2 | Nut-HF, Lock |
| 109 | 140-2450 | 1 | Sensor-Oxygen |
| 110 | 136-4916 | 1 | Adapter-Inlet, Air |
| 111 | 140-2451 | 1 | Clamp-Breather Hose |
| 112 | 136-4922 | 1 | Gasket-Muffler |
| 113 | 136-4985 | 2 | Screw |

● Not illustrated

■ Not serviced separately

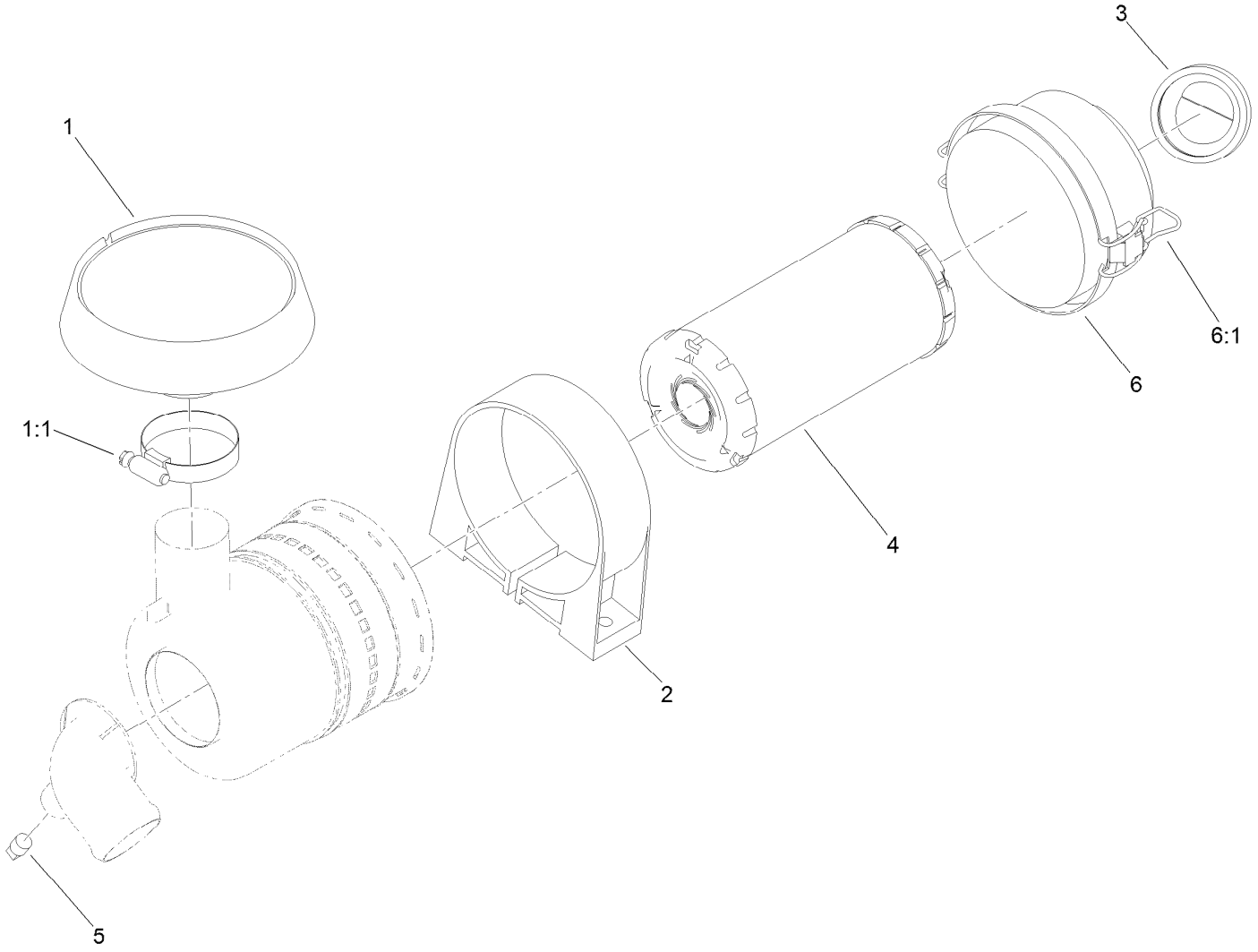


# Air Cleaner Assembly No. 138-3447

| *Ref.* | *Part Number* | *Qty.* | *Description* |
|---|---|---|---|
| 1 | 136-7859 | 1 | Rain Cap Kit |
| 1:1 | 1-643009 | 1 | Clamp-Hose |
| 2 | 95-5806 | 1 | Bracket-Mounting, Air Cleaner |
| 3 | 87-9400 | 1 | Valve-Vacuator |
| 4 | 108-3811 | 1 | Filter-Air |
| 5 | 281-7 | 1 | Cap-Pipe |
| 6 | 94-3652 | 1 | Cover ASM |
| 6:1 | 1-643283 | 2 | Latch-Cleaner, Air |

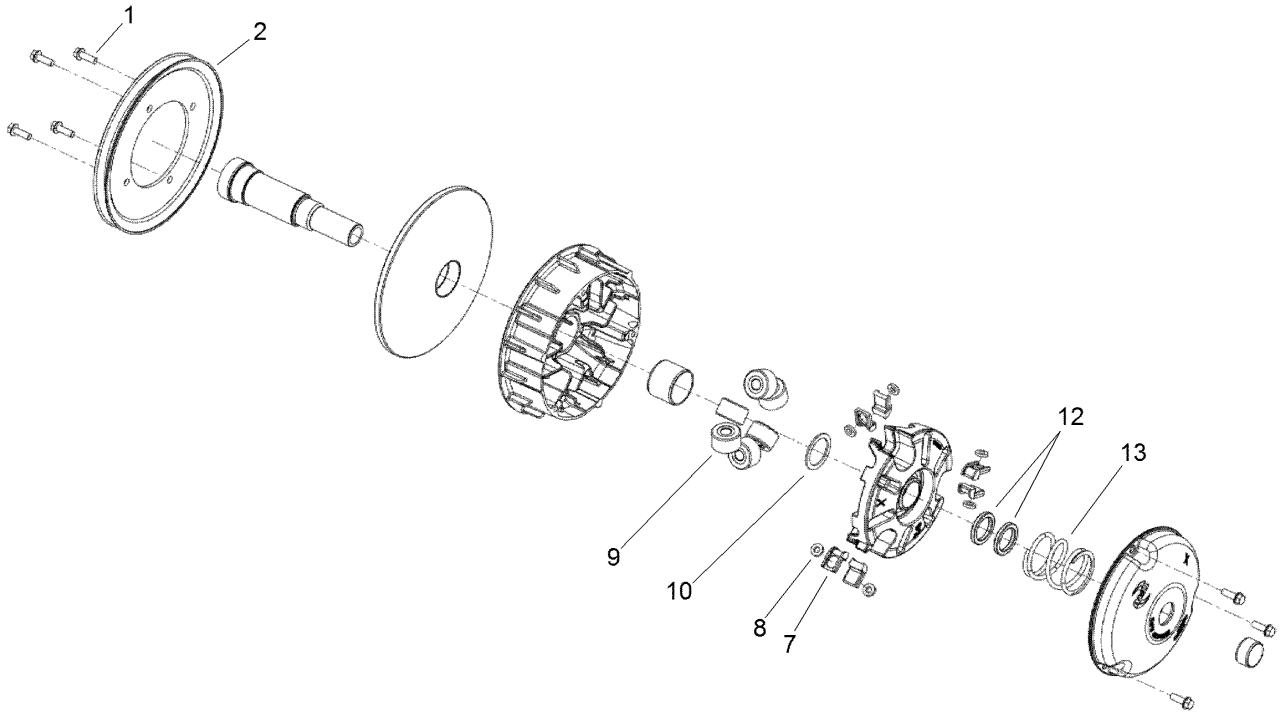


# Primary Clutch Assembly No. 138-0095

| *Ref.* | *Part Number* | *Qty.* | *Description* |
|---|---|---|---|
| 1 | 49-2040 | 7 | Screw-HWHTF |
| 2 | 119-0813 | 1 | Pulley-Primary |
| 7 | 127-8689 | 6 | Button-Primary, Torque |
| 8 | 127-8690 | 6 | Plug-Button, Torque |
| 9 | 119-0804 | 6 | Weight-Roller |
| 10 | 119-0812 | 1 | Shim-Spider |
| 12 | 119-0807 | 2 | Shim-Limiter |
| 13 | 119-9532 | 1 | Spring-Red/White |

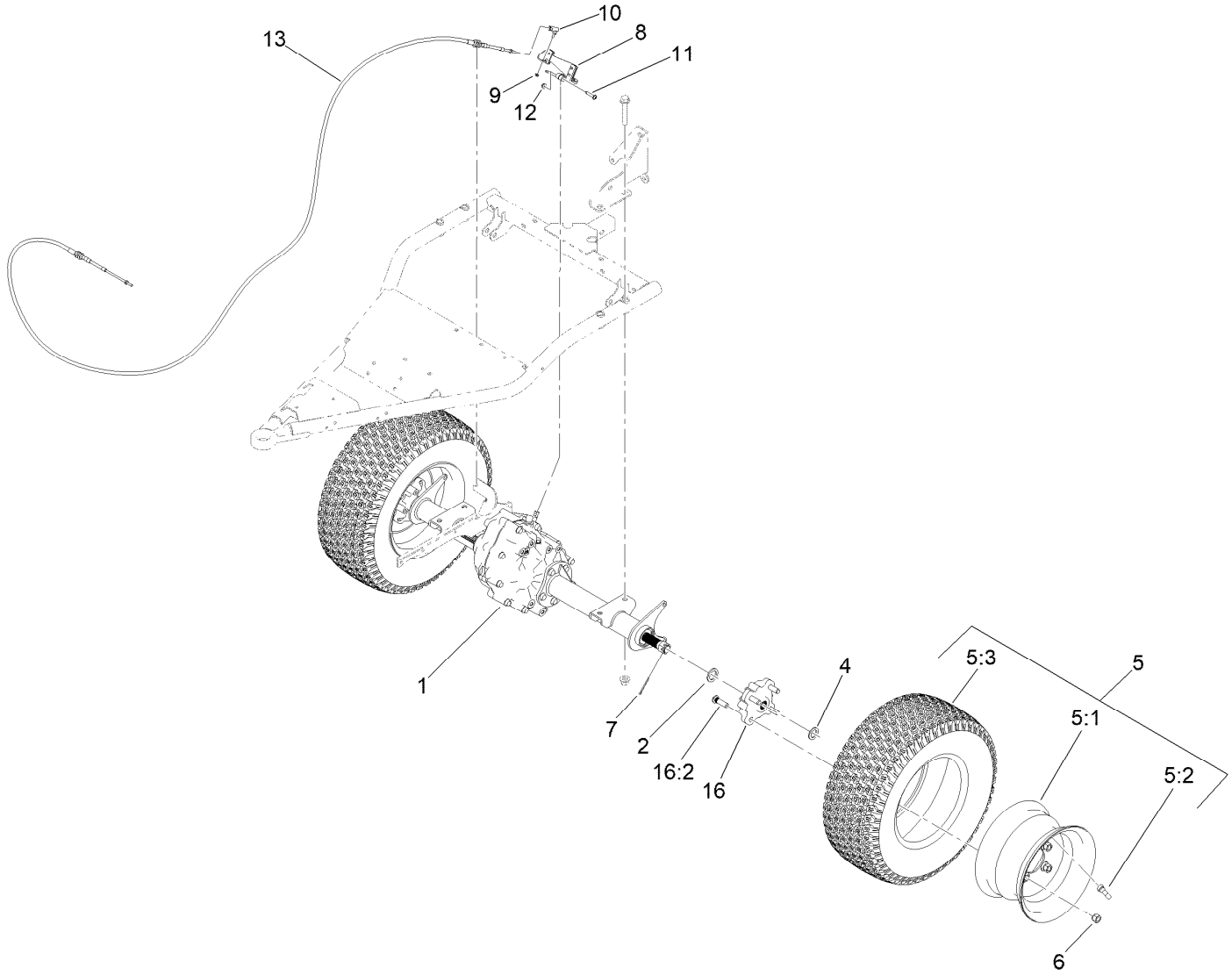


# Rear Wheel and Transaxle Assembly

| Ref. | Part Number | Qty. | Description |
|---|---|---|---|
| 1 | 131-3486 | 1 | Transaxle |
| 2 | 131-8570 | 2 | Spacer-Hardened |
| 4 | 3-7898 | 2 | Washer-Thrust |
| 5 | 139-4495 | 2 | Wheel And Tire ASM |
| 5:1 | 131-8317 | 1 | Wheel |
| 5:2 | 232-27 | 1 | Stem-Valve |
| 5:3 | 139-4475 | 1 | Tire-20 X 8.00-10 |
| 6 | 242-50 | 8 | Nut-Lug |
| 7 | 1-806800 | 2 | Pin-Cotter |

| Ref. | Part Number | Qty. | Description |
|---|---|---|---|
| 8 | 133-7260-03 | 1 | Arm-Shift |
| 9 | 3296-27 | 1 | Nut-Lock, NI |
| 10 | 2411-38 | 1 | Joint-Ball |
| 11 | 132-6777 | 1 | Screw-TTH |
| 12 | 104-7201 | 1 | Nut-HF, NI |
| 13 | 127-8897 | 1 | Cable-Shift |
| 16 | 140-4849 | 2 | Hub ASM, Rear |
| 16:2 | 10-6830 | 4 | Stud-Type, Drive |

# Transaxle Assembly No. 131-3486

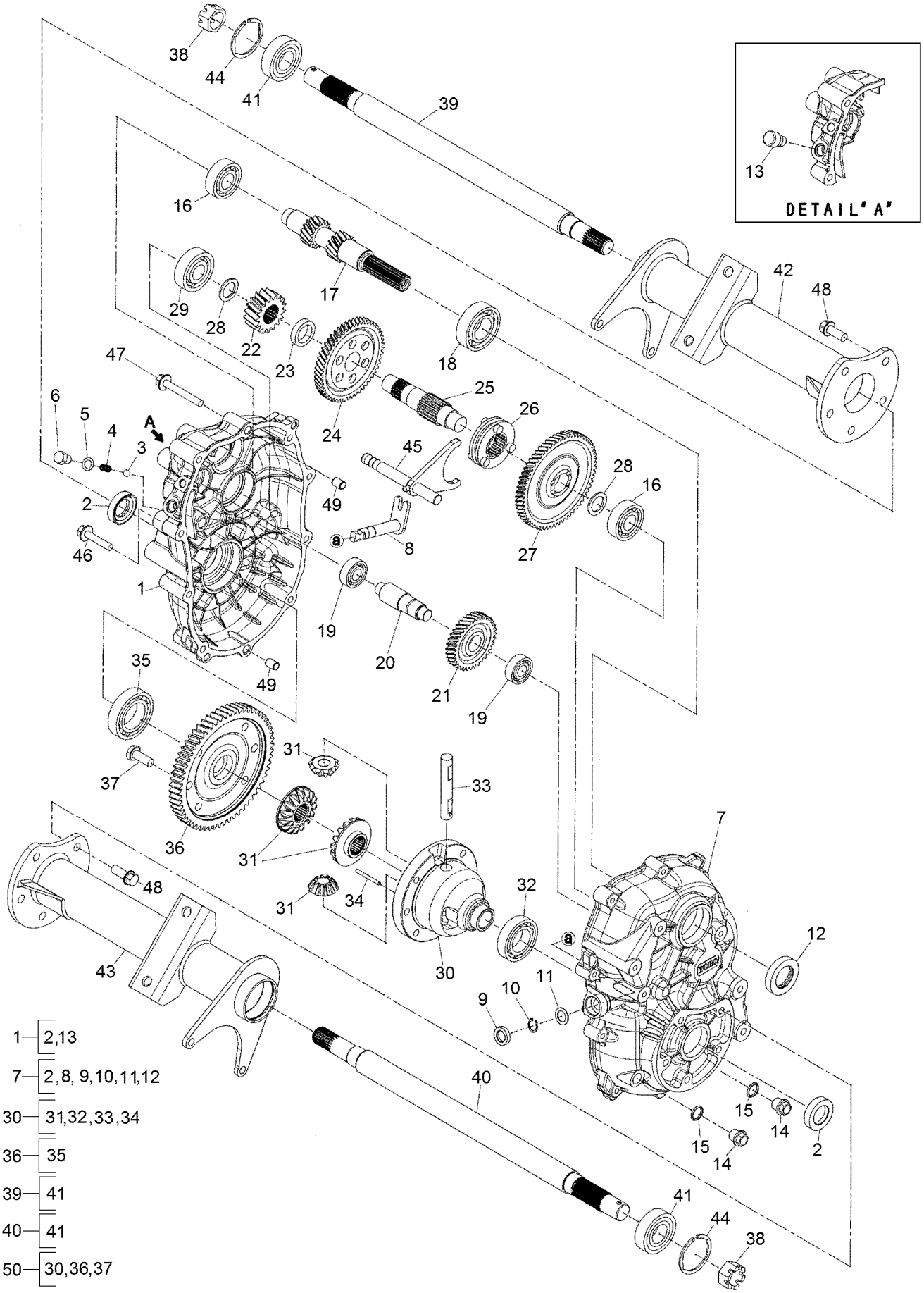

# Transaxle Assembly No. 131-3486 (continued)

| Ref. | Part Number | Qty. | Description |
|---|---|---|---|
| 1 | 133-2400 | 1 | Case-LH |
| 2 | 133-2401 | 2 | Seal-Oil |
| 3 | 104-1660 | 1 | Ball-Steel |
| 4 | 104-1661 | 1 | Spring |
| 5 | 104-1662 | 1 | Gasket |
| 6 | 104-1663 | 1 | Bolt |
| 7 | 133-2402 | 1 | Case-RH |
| 8 | 133-2403 | 1 | Shaft-Select |
| 9 | 133-2446 | 1 | Seal-Oil |
| 10 | 133-2404 | 1 | Ring-Snap |
| 11 | 133-2405 | 1 | Spacer |
| 12 | 104-1607 | 1 | Seal-Oil |
| 13 | 133-2406 | 1 | Breather-Air |
| 14 | 133-2407 | 2 | Plug-Drain, Oil |
| 15 | 133-2408 | 2 | Gasket |
| 16 | 133-2409 | 2 | Bearing-Ball |
| 17 | 133-2410 | 1 | Shaft-Input |
| 18 | 133-2411 | 1 | Bearing-Ball |
| 19 | 133-2412 | 2 | Bearing-Ball |
| 20 | 133-2413 | 1 | Shaft-Counter |
| 21 | 133-2414 | 1 | Gear |
| 22 | 133-2415 | 1 | Gear |
| 23 | 133-2416 | 1 | Collar |
| 24 | 133-2417 | 1 | Gear |
| 25 | 133-2418 | 1 | Shaft-Center |

| Ref. | Part Number | Qty. | Description |
|---|---|---|---|
| 26 | 133-2419 | 1 | Clutch-Pin |
| 27 | 133-2420 | 1 | Gear |
| 28 | 133-2421 | 2 | Spacer |
| 29 | 133-2422 | 1 | Bearing-Ball |
| 30 | 133-2423 | 1 | Case-Differentail |
| 31 | 133-2424 | 1 | Set-Gear, Differential |
| 32 | 133-2425 | 1 | Bearing-Ball |
| 33 | 104-1644 | 1 | Shaft-Differential |
| 34 | 104-1645 | 1 | Pin |
| 35 | 133-2426 | 1 | Bearing-Ball |
| 36 | 133-2427 | 1 | Gear |
| 37 | 104-1649 | 6 | Bolt |
| 38 | 133-2428 | 2 | Nut-Castle |
| 39 | 133-2429 | 1 | Shaft-Axle, LH |
| 40 | 133-2430 | 1 | Shaft-Axle, RH |
| 41 | 133-2431 | 2 | Bearing-Ball |
| 42 | 133-2432 | 1 | Case-Axle, LH |
| 43 | 133-2433 | 1 | Case-Axle, RH |
| 44 | 133-2434 | 2 | Ring-Snap |
| 45 | 133-2435 | 1 | Shaft-Shift |
| 46 | 133-2436 | 1 | Bolt-Flange |
| 47 | 133-2437 | 9 | Bolt-Flange |
| 48 | 133-2438 | 10 | Bolt-Flange |
| 49 | 133-2439 | 2 | Pipe-Knock |
| 50 | 133-2440 | 1 | Differential ASM |

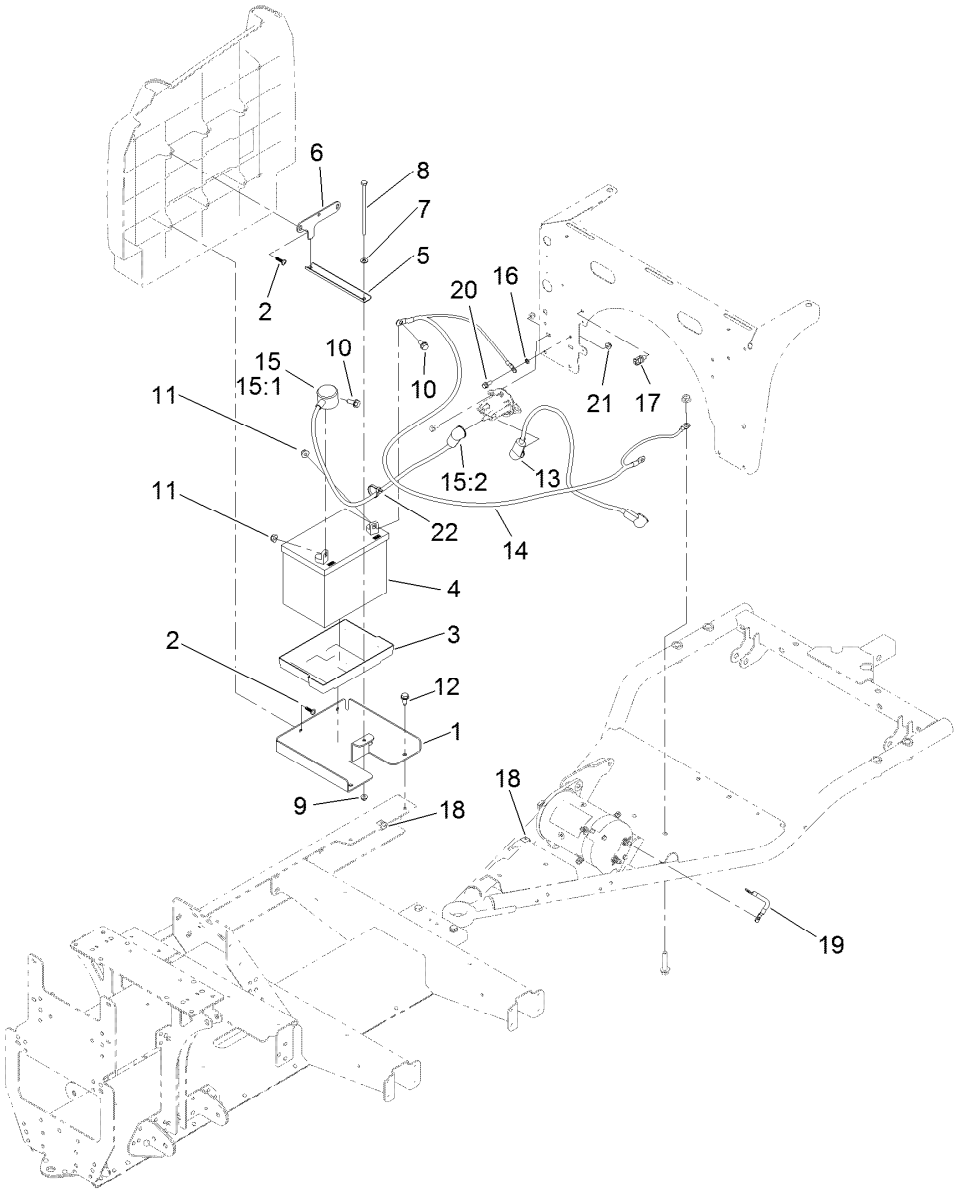


# Battery and Cable Assembly

| Ref. | Part Number | Qty. | Description |
|---|---|---|---|
| 1 | 127-7810-03 | 1 | Base-Battery |
| 2 | 120-2349 | 4 | Screw |
| 3 | 106948 | 1 | Tray-Battery |
| 4 | 104-8162 | 1 | Battery |
| 5 | 127-7816-03 | 1 | Channel-Clamp, Battery |
| 6 | 127-7814-03 | 1 | Plate-Clamp, Battery |
| 7 | 3256-22 | 1 | Washer-Flat |
| 8 | 321-47 | 1 | Screw-HH |
| 9 | 104-7201 | 1 | Nut-HF, NI |
| 10 | 3234-5 | 2 | Screw-HHF |
| 11 | 104-8300 | 2 | Nut-HF, NI |
| 12 | 32144-70 | 2 | Screw-HWHTF |
| 13 | 122-0639 | 1 | Cable-Battery, Positive |
| 14 | 122-0638 | 1 | Cable-Battery, Negative |

| Ref. | Part Number | Qty. | Description |
|---|---|---|---|
| 15 | 109-7621 | 1 | Positive Battery Cable ASM |
| 15:1 | 1-543393 | 1 | Insulator-Solenoid |
| 15:2 | 109-2407 | 1 | Insulator-Battery |
| 16 | 3255-7 | 1 | Washer-Lock/EXT |
| 17 | 32180-030 | 1 | Clip-Tie |
| 18 | 32180-082 | 3 | Clip-Edge W/Tie, Perpendicular |
| 19 | 122-1176 | 1 | Cable-Battery, Negative |
| 20 | 3234-33 | 1 | Screw-HHF |
| 21 | 104-7201 | 1 | Nut-HF, NI |
| 22 | 3290-378 | 1 | Tie-Cable |
| 99 | 107-0392 | 1 | Protection-Terminal, Aerosol ● |

● Not illustrated

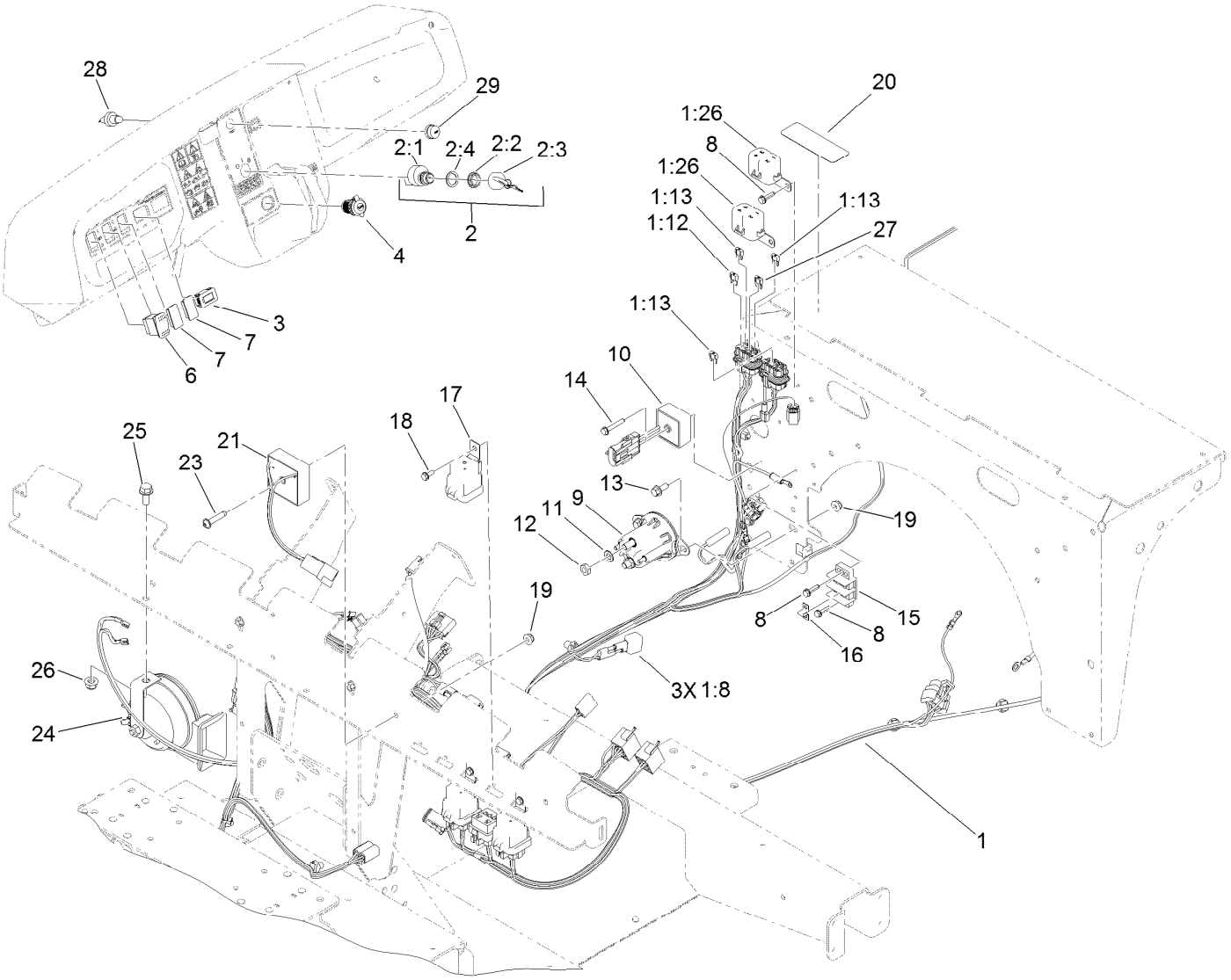


# Electrical Assembly

| Ref. | Part Number | Qty. | Description |
|---|---|---|---|
| 1 | 122-2433 | 1 | Harness-Wire, Main |
| 1:8 | 100-4918 | 3 | Diode |
| 1:12 | 121-8867 | 1 | Fuse-Mini Blade, 15 Amp |
| 1:13 | 121-8866 | 3 | Fuse-Mini Blade, 10 Amp |
| 1:14 | 32160-093 | 1 | Connector-Mp280, 2M ● |
| 1:23 | 32180-056 | 1 | Cap ● |
| 1:24 | 32180-156 | 1 | Cap-Plug, 6 Way ● |
| 1:26 | 32180-179 | 2 | Cover-Bussman |
| 2 | 122-1145 | 1 | Ignition Switch ASM |
| 2:1 | | 1 | Switch-Ignition ■ |
| 2:2 | 108-8660 | 1 | Nut-Mounting |
| 2:3 | 106-5270 | 1 | Ignition Key Set |
| 2:4 | 108-8659 | 1 | Washer-Backup |
| 3 | 120-2244 | 1 | Hourmeter |
| 4 | 131-8388 | 1 | Socket-USB |
| 6 | 95-8999 | 1 | Switch |
| 7 | 99-7420 | 2 | Plug-Hole |
| 8 | 100-4351 | 5 | Screw-HWH |

| Ref. | Part Number | Qty. | Description |
|---|---|---|---|
| 9 | 114-3315 | 1 | Solenoid |
| 10 | 119-9492 | 1 | Regulator-Voltage |
| 11 | 3255-8 | 2 | Washer-Lock |
| 12 | 3220-2 | 2 | Nut-Jam |
| 13 | 3234-33 | 2 | Screw-HHF |
| 14 | 100-4352 | 1 | Screw-HWH |
| 15 | 42862 | 1 | Block-Terminal, Ground |
| 16 | 42863 | 1 | Strip-Jumper |
| 17 | 99-7430 | 3 | Relay-Mini |
| 18 | 32144-1 | 3 | Screw-Taptite |
| 19 | 104-7201 | 4 | Nut-HF, NI |
| 20 | 139-3340 | 1 | Decal-Fuse Block, EFI |
| 21 | 138-0085 | 1 | Timer-Delay, 30 Sec (1 Amp) |
| 23 | 132-6777 | 1 | Screw-TTH |
| 24 | 110-2594 | 1 | Horn |
| 25 | 3234-5 | 1 | Screw-HHF |
| 26 | 104-8300 | 1 | Nut-HF, NI |

● Not illustrated

■ Not serviced separately

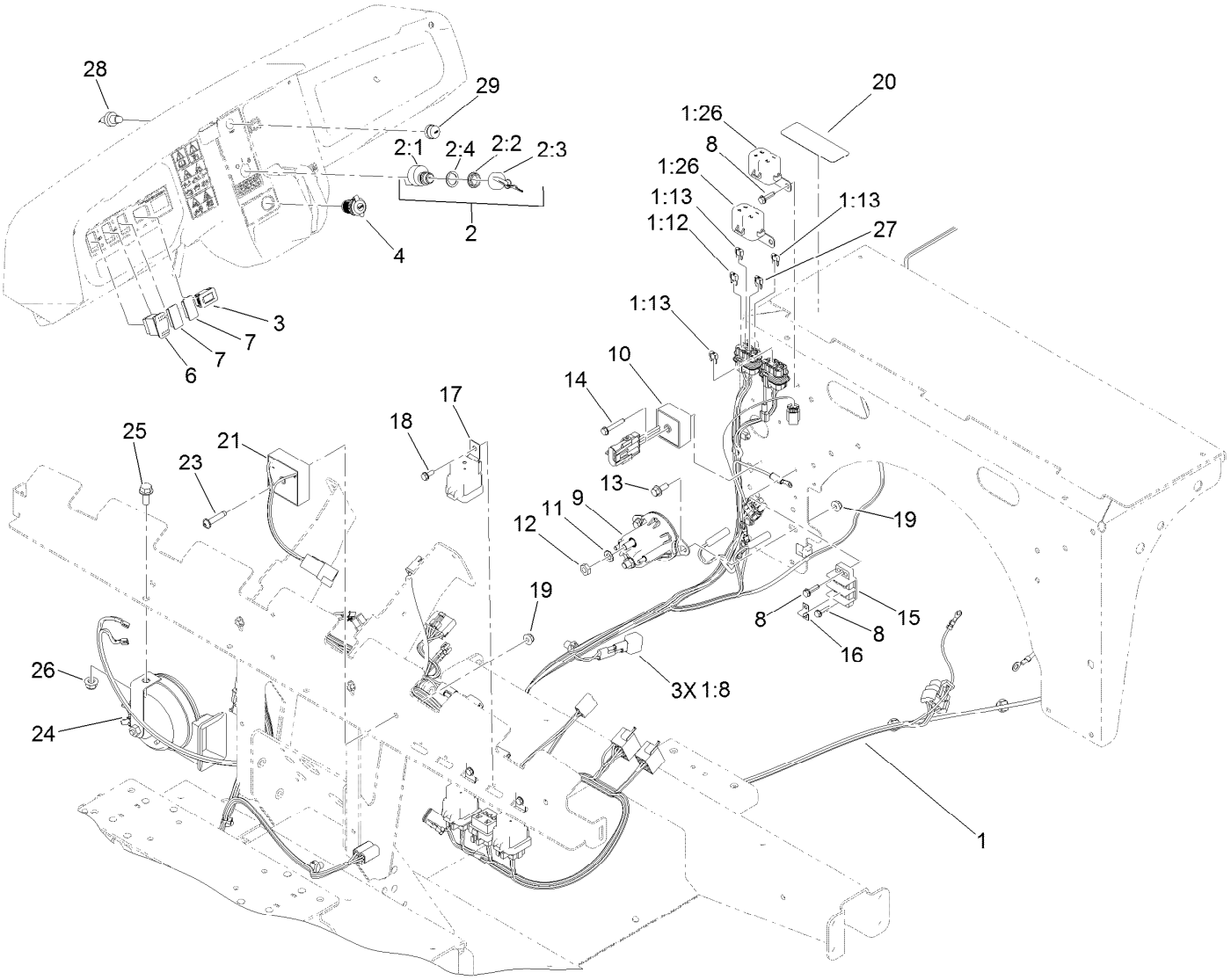


# Electrical Assembly (continued)

| Ref. | Part Number | Qty. | Description |
|---|---|---|---|
| 27 | 121-8870 | 1 | Fuse-Mini Blade, 30 Amp |

| Ref. | Part Number | Qty. | Description |
|---|---|---|---|
| 28 | 112-3324 | 1 | Switch-Horn |
| 29 | 112-3313 | 1 | Nut-Weatherproof |

● Not illustrated

■ Not serviced separately

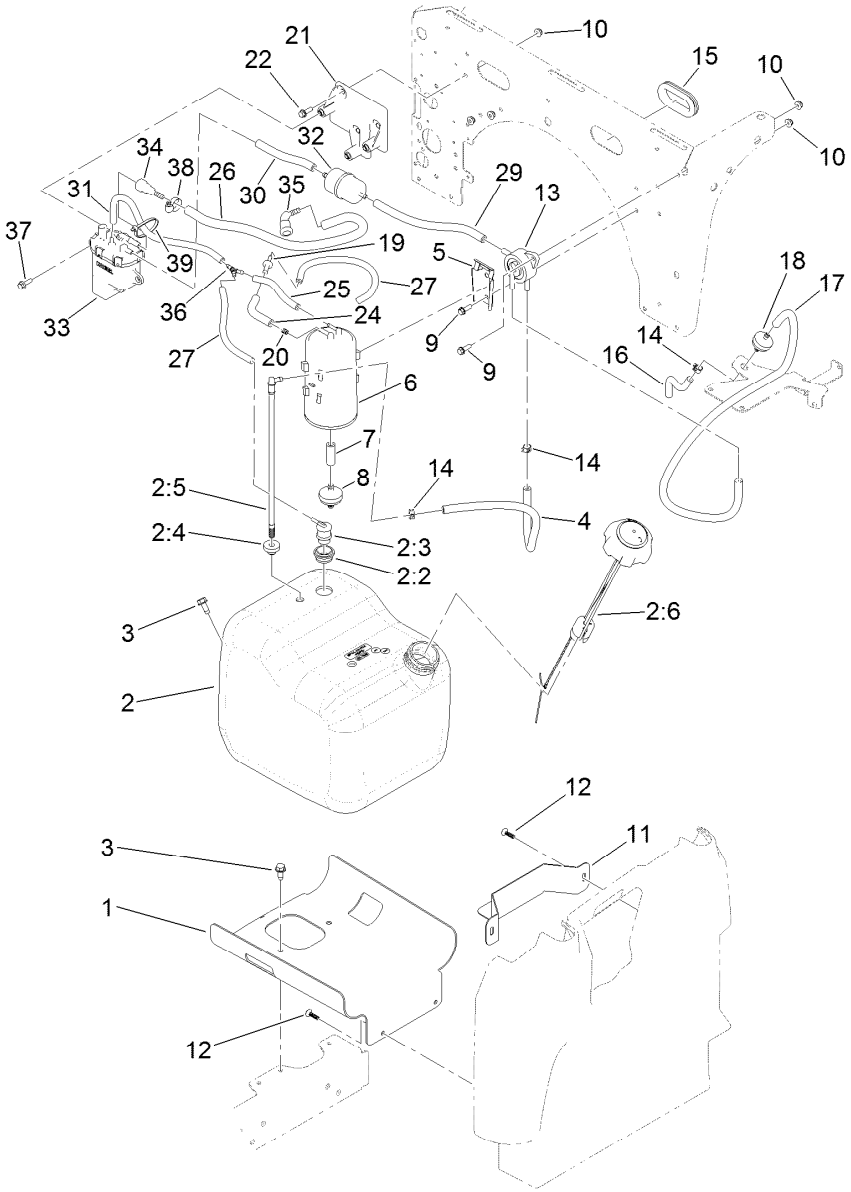


# Fuel System Assembly

| Ref. | Part Number | Qty. | Description |
|---|---|---|---|
| 1 | 127-7739-03 | 1 | Mount-Tank, Fuel |
| 2 | 127-7849 | 1 | Fuel Tank ASM |
| 2:2 | 114-0284 | 1 | Grommet |
| 2:3 | 114-0285 | 1 | Valve-Rollover |
| 2:4 | 46-6560 | 1 | Bushing |
| 2:5 | 115-9044 | 1 | Pipe-Stand |
| 2:6 | 131-8357 | 1 | Cap-Gauge |
| 3 | 32144-70 | 3 | Screw-HWHTF |
| 4 | 114-4428 | 1 | Hose-Fuel |
| 5 | 114-0292 | 1 | Bracket-Canister, Carbon |
| 6 | 127-8685 | 1 | Canister-Carbon |
| 7 | 106-5317 | 1 | Hose-Fuel |
| 8 | 115-7854 | 1 | Filter-Fuel, Inline |
| 9 | 32105-15 | 4 | Screw-HWH |
| 10 | 104-7201 | 7 | Nut-HF, NI |
| 11 | 127-7845-05 | 1 | Bracket-Fuel Tank |
| 12 | 120-2349 | 4 | Screw |
| 13 | 131-8526 | 1 | Pump-Fuel |
| 14 | 2412-98 | 8 | Clamp-Hose |
| 15 | 240-12 | 1 | Grommet-Rubber |

| Ref. | Part Number | Qty. | Description |
|---|---|---|---|
| 16 | 140-4825 | 1 | Hose-Pulse (.212 X 5.00, J200, LP) |
| 17 | 109-3491 | 1 | Hose-Fuel |
| 18 | 56-6360 | 1 | Filter-Fuel |
| 19 | 117-5399 | 1 | Adaptor-Orifice |
| 20 | 120-2038 | 1 | Cartridge-Valve, Check |
| 21 | 136-6346 | 1 | Bracket-Pump, Fuel |
| 22 | 115-5103 | 3 | Screw-HHF |
| 24 | 114-3765 | 1 | Hose-Fuel |
| 25 | 68-3632 | 1 | Hose-Fuel |
| 26 | 136-6343 | 1 | Hose-Fuel |
| 27 | 136-6345 | 2 | Hose-Fuel |
| 29 | 109-0282 | 1 | Hose-Fuel |
| 30 | 109-0650 | 1 | Hose-Fuel |
| 31 | 136-6344 | 1 | Hose-Fuel |
| 32 | 94-9695 | 1 | Filter-Fuel |
| 33 | 136-6347 | 1 | Pump-Fuel, EFI |
| 34 | 125-2921 | 1 | Fitting-Fuel |
| 35 | 121-5585 | 1 | Fitting-Fuel |
| 36 | 136-6339 | 1 | Fitting-Fuel |
| 37 | 33103-020 | 3 | Screw-HHF |

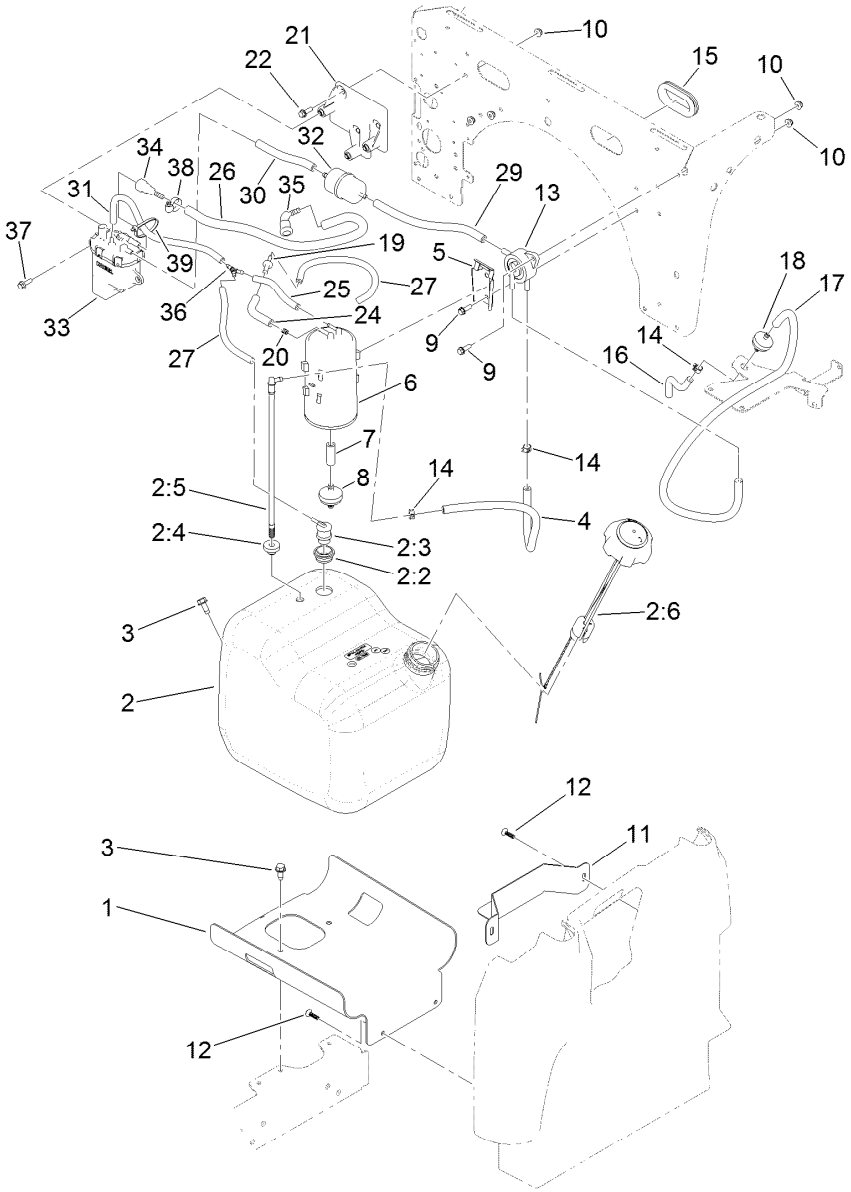


# Fuel System Assembly (continued)

| Ref. | Part Number | Qty. | Description |
|---|---|---|---|
| 38 | 2412-36 | 2 | Clamp-Hose |
| 39 | 3290-378 | 1 | Tie-Cable |

# Attachments and Accessories

## For 07409 Workman GTX EFI Utility Vehicle

| Product Name | Model/Part |
|---|---|
| Workman GTX 2-Person Canopy | 07921 |
| 12V Electric Lift Kit | 07144 |
| Work Light Kit | 130-5485 |
| Steel Flat Bed Kit | 07148 |
| Beacon Kit | 130-5484 |
| Exterior Mirror Kit | 130-5448 |
| Storage Box Kit | 07156 |
| Interior Mirror Kit | 130-5449 |
| Windshield Washer Fluid Kit, 2015 and after Workman MD/HD Series Utility Vehicle | 130-5615 |
| Brake and Signal Light Kit | 132-8579 |
| 6in L-Track Kit | 07158 |
| 2in L-Track Kit | 07159 |
| Aggressive Tire Kit | 07423 |
| Horn Kit | 133-3016 |
| Reverse Alarm Kit | 133-3018 |
| Power Point Kit | 131-8550 |
| Parking Brake Alarm Kit | 133-3019 |
| Spark Arrestor Screen Kit | 133-7109 |
| Bed Rack Kit | 07031 |
| Cab Kit | 07142 |
| Mount-Ball | 133-7116 |
| Road Light and Homologation Kit | 133-7128 |
| 12V Electric Bed Lift Kit | 07167 |
| Brush Guard Kit | 07145 |
| Tire-20 8.00-10 | 116-7333 |
| MVP Kit 400 Hour | 136-6280 |
| Cab Mount Kit, Workman GTX Utility Vehicle with Extended Flatbed | 133-7198 |
| Service Hood ASM | 133-7209 |
| ROPS Kit | 07032 |
| Door Mount Mirror Kit | 136-1997 |
| Hose Reel Mounting Kit | 07027 |
| Cargo Bed Kit | 07046 |
| Trash Can Mounting Kit | 07028 |
| Bench Seat Base Kit | 07047 |
| Walk Spreader Mounting Kit | 07029 |
| Bucket Seat Base Kit | 07048 |
| Extension Kit | 07049 |
| Front Hitch Kit, Workman GTX Series Utility Vehicles with Brush Guard | 07146 |
| Front Hitch Kit, Workman GTX or MDX Series Utility Vehicles without Brush Guard | 07147 |
| Small Bedrack Mount Grip Kit | 136-6311 |
| Shim-Limiter | 119-0807 |
| Large Bedrack Mount Grip Kit | 136-6312 |
| Small Seat Cover | 131-6690 |
| Wireless Hourmeter Kit | 136-6323 |
| Plate-Skid | 137-2886-03 |
| Switch-Ignition ASM, Key1 | 138-3500 |

# Attachments and Accessories (continued)

Switch-Ignition ASM, Key2 ..... 138-3501
Switch-Ignition ASM, Key3 ..... 138-3502
Switch-Ignition ASM, Key4 ..... 138-3503
Switch-Ignition ASM, Key5 ..... 138-3504
Glove Box Cover Kit ..... 137-2883
Fold-Down Rear Facing Seat..... 07123
Lift Kit..... 07414
Tire/Wheel Asm ..... 131-8319
Van Box ..... 07440
Folding Windshield Kit, Workman GTX Utility Vehicle with Canopy ..... 07923
Tire ..... 94-5236
Wide Angle Mirror Kit..... 133-1009
Wide Angle Mirror Kit..... 133-1038
Bracket-Mount, Radio.....133-7111-03
GTX Ball Cage ROPS, Certified..... 07161
Canopy W/ ROPS..... 07169
Canopy Mount Kit, Workman GTX Utility Vehicle with Extended Flatbed ..... 07199
Full Shelf For Van Box ..... 07441

**Notes:**

TORO®

Count on it.