Form No. 3428-370 Rev E

# 30in TurfMaster™ HDX Walk-Behind Lawn Mower

**Model No. 22215—Serial No. 400000000 and Up**

**Operator's Manual**

# Introduction

This rotary-blade, walk-behind lawn mower is intended to be used by professional, hired operators. It is designed primarily for cutting grass on well-maintained lawns on residential or commercial properties. Using this product for purposes other than its intended use could prove dangerous to you and bystanders.

Read this information carefully to learn how to operate and maintain your product properly and to avoid injury and product damage. You are responsible for operating the product properly and safely.

Visit www.Toro.com for more information, including safety tips, training materials, accessory information, help finding a dealer, or to register your product.

Whenever you need service, genuine Toro parts, or additional information, contact an Authorized Service Dealer or Toro Customer Service and have the model and serial numbers of your product ready. Figure 1 identifies the location of the model and serial numbers on the product. Write the numbers in the space provided.

***Important:*** **With your mobile device, you can scan the QR code on the serial number decal (if equipped) to access warranty, parts, and other product information**

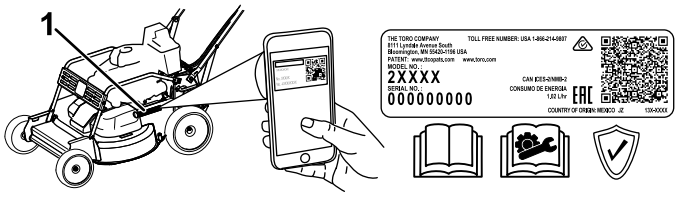


**Figure 1**

1. Model and serial number location

**Model No.** _____

**Serial No.** _____

This manual identifies potential hazards and has safety messages identified by the safety-alert symbol (Figure 2), which signals a hazard that may cause serious injury or death if you do not follow the recommended precautions.

g000502

**Figure 2**

Safety-alert symbol

This manual uses 2 words to highlight information. **Important** calls attention to special mechanical information and **Note** emphasizes general information worthy of special attention.

It is a violation of California Public Resource Code Section 4442 or 4443 to use or operate the engine on any forest-covered, brush-covered, or grass-covered land unless the engine is equipped with a spark arrester, as defined in Section 4442, maintained in effective working order or the engine is constructed, equipped, and maintained for the prevention of fire.

The enclosed engine owner's manual is supplied for information regarding the US Environmental Protection Agency (EPA) and the California Emission Control Regulation of emission systems, maintenance, and warranty. Replacements may be ordered through the engine manufacturer.

**Gross or Net Torque:** The gross or net torque of this engine was laboratory rated by the engine manufacturer in accordance with the Society of Automotive Engineers (SAE) J1940 or J2723. As configured to meet safety, emission, and operating requirements, the actual engine torque on this class of mower will be significantly lower. Please refer to the engine manufacturer's information included with the machine.

**⚠ WARNING**

**CALIFORNIA**
**Proposition 65 Warning**

**The engine exhaust from this product contains chemicals known to the State of California to cause cancer, birth defects, or other reproductive harm.**

**Use of this product may cause exposure to chemicals known to the State of California to cause cancer, birth defects, or other reproductive harm.**

**© 2021—The Toro® Company**
**8111 Lyndale Avenue South**
**Bloomington, MN 55420**

Register at www.Toro.com.

Original Instructions (EN)
**Printed in Mexico**
**All Rights Reserved**

*3428-370*

# Contents


Introduction ..... 1
Safety ..... 2
General Safety ..... 2
Safety and Instructional Decals ..... 3
Setup ..... 5
1 Installing the Handle ..... 5
2 Adding Oil to the Engine ..... 6
3 Assembling the Grass Bag ..... 6
Product Overview ..... 8
Controls ..... 8
Specifications ..... 8
Attachments/Accessories ..... 9
Operation ..... 9
Before Operation ..... 9
Before Operation Safety ..... 9
Filling the Fuel Tank ..... 9
Checking the Engine-Oil Level ..... 10
Adjusting the Handle Height ..... 10
Adjusting the Cutting Height ..... 11
Checking the Blade-Stop System Operation ..... 12
During Operation ..... 12
During Operation Safety ..... 12
Starting the Engine ..... 13
Operating the Self-Propel Drive and Engaging the Blades ..... 14
Shutting Off the Engine ..... 15
Engaging the Parking Brake ..... 15
Disengaging the Parking Brake ..... 15
Recycling the Clippings ..... 16
Bagging the Clippings ..... 17
Side-Discharging the Clippings ..... 18
Operating Tips ..... 19
After Operation ..... 19
After Operation Safety ..... 19
Cleaning under the Machine ..... 19
Cleaning the Wheels ..... 20
Maintenance ..... 21
Recommended Maintenance Schedule(s) ..... 21
Maintenance Safety ..... 21
Servicing the Air Filter ..... 22
Changing the Engine Oil ..... 22
Changing the Oil Filter ..... 23
Servicing the Spark Plug ..... 24
Checking the Condition of the Belts ..... 24
Emptying the Fuel Tank and Cleaning the Filter ..... 24
Changing the Fuel Filter ..... 25
Servicing the Blade-Drive System ..... 25
Servicing the Blades ..... 26
Changing the Blade-Drive Belt ..... 28
Changing the Blade-Brake-Clutch (BBC) Belt ..... 29
Adjusting the Blade-Brake Cable ..... 30
Changing the Transmission Belt ..... 31
Adjusting the Parking-Brake Cable ..... 32
Adjusting the Self-Propel Drive ..... 33
Storage ..... 34
Storage Safety ..... 34
General Information ..... 34
Preparing the Fuel System ..... 34
Preparing the Engine ..... 34
Removing the Machine from Storage ..... 34
Troubleshooting ..... 35


# Safety

This machine has been designed in accordance with ANSI B71.4-2017.

## General Safety

This product is capable of amputating hands and feet and of throwing objects. Always follow all safety instructions to avoid serious personal injury.

- Read, understand, and follow the instructions and warnings in this *Operator's Manual* and on the machine and attachments before starting the engine.
- Do not put your hands or feet near moving parts or under the machine. Keep clear of any discharge opening.
- Do not operate the machine without all guards and other safety protective devices in place and functioning properly on the machine.
- Keep bystanders and children out of the operating area. Do not allow children to operate the machine. Allow only people who are responsible, trained, familiar with the instructions, and physically capable to operate the machine.
- Stop the machine, shut off the engine, and wait for all moving parts to stop before servicing, fueling, or unclogging the machine.

Improperly using or maintaining this machine can result in injury. To reduce the potential for injury, comply with these safety instructions and always pay attention to the safety-alert symbol ⚠, which means Caution, Warning, or Danger—personal safety instruction. Failure to comply with these instructions may result in personal injury or death.

# Safety and Instructional Decals

Safety decals and instructions are easily visible to the operator and are located near any area of potential danger. Replace any decal that is damaged or missing.

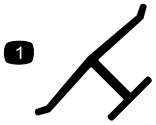


decaloemmarkt

**Manufacturer's Mark**

1. This mark indicates that the blade is identified as a part from the original machine manufacturer.

---

decal93-7009

**93-7009**

1. Warning—Do not operate the machine with the deflector up or removed; keep the deflector in place.
2. Cutting/dismemberment hazard of hand or foot, mower blade—stay away from moving parts.

---

decal94-8072

**94-8072**

---

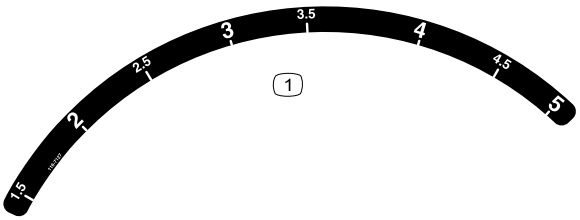


decal116-7127

**116-7127**

1. Height of cut

---

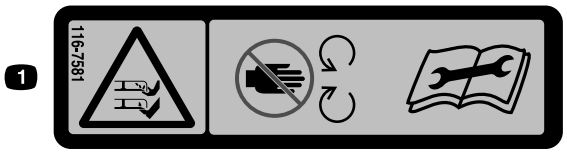


decal116-7581

**116-7581**

1. Cutting/dismemberment hazard of hand or foot, mower blade—stay away from moving parts. Read the *Operator's Manual* before adjusting servicing, or cleaning the machine.

---

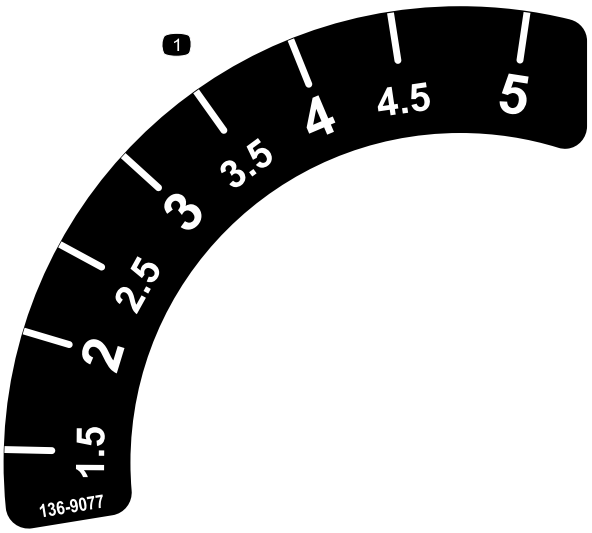


decal136-9077

**136-9077**

1. Height of cut

---

decal139-5405

**139-5405**

1. Parking brake—engage
2. Parking brake—disengage

---

decal116-7583

**116-7583**

1. Warning—read the *Operator's Manual*; do not operate this machine unless you are trained.
2. Thrown object hazard—keep bystanders away.
3. Thrown object hazard—do not operate the mower without the rear discharge plug or bag in place.
4. Cutting/dismemberment hazard of hand or foot, mower blade—stay away from moving parts; keep all guards in place.
5. Warning—wear hearing protection.
6. Cutting/dismemberment hazard of hand or foot, mower blade—do not operate up and down slopes; operate side to side on slopes; shut off the engine before leaving the machine; pick up any debris before mowing; look behind you when moving in reverse.

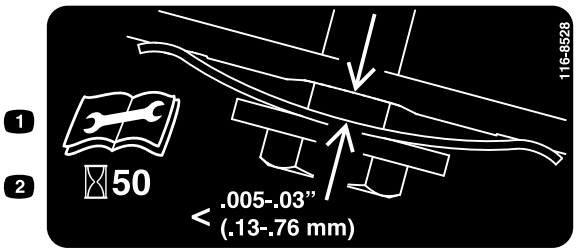


decal116-8528

**116-8528**

1. Read the *Operator's Manual* before performing any maintenance.
2. Check belt tension every 50 operating hours.

decal116-9313

**116-9313**

1. Read the *Operator's Manual*.
2. Fire hazard
3. Toxic gas inhalation hazard
4. Hot surface; burn hazard

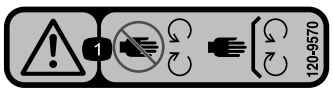


decal120-9570

**120-9570**

1. Warning—stay away from moving parts; keep all guards and shields in place.

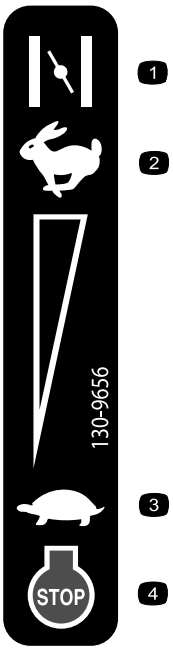


decal130-9656

**130-9656**

1. Choke
2. Fast
3. Slow
4. Engine—stop (shut off)

decal133-8062

**133-8062**

# Setup

***Important:*** **Remove and discard the protective plastic sheet that covers the engine and any other plastic or wrapping on the machine.**

**1**

## Installing the Handle

**No Parts Required**

### Procedure

**⚠ WARNING**

**Folding or unfolding the handle improperly can damage the cables, causing an unsafe operating condition.**

- **Do not damage the cables when folding or unfolding the handle.**
- **If a cable is damaged, contact an Authorized Service Dealer.**

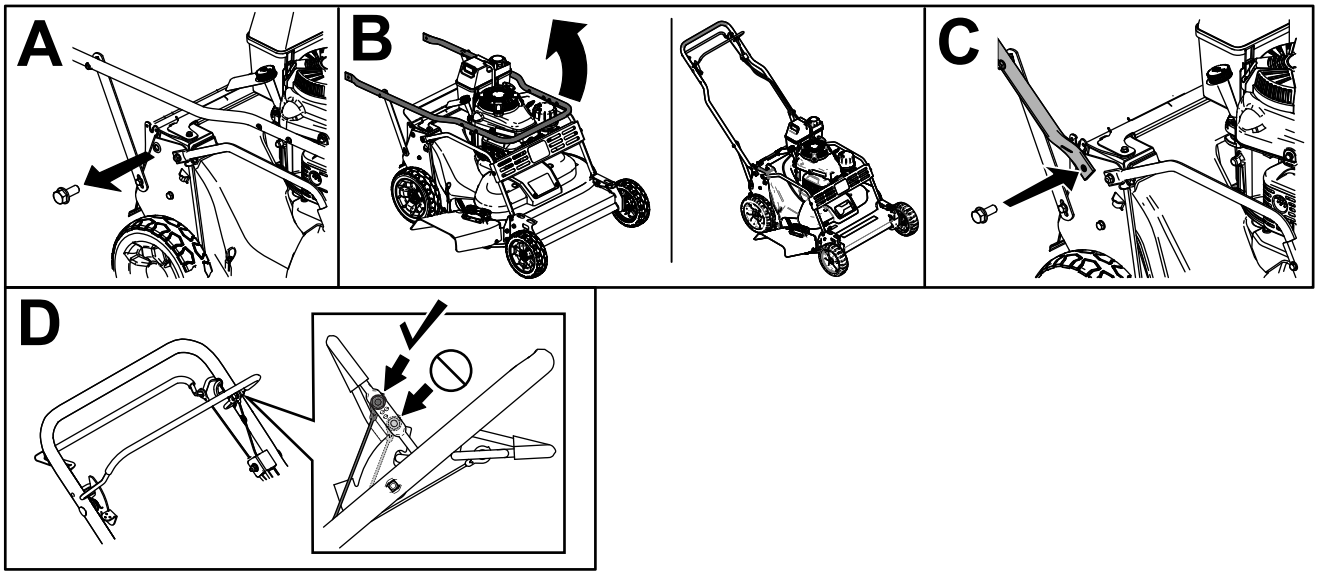


**Figure 3**

# 2

# Adding Oil to the Engine

**No Parts Required**

## Procedure

***Important:*** **Your machine does not come with oil in the engine. Before starting the engine, add oil to the engine.**

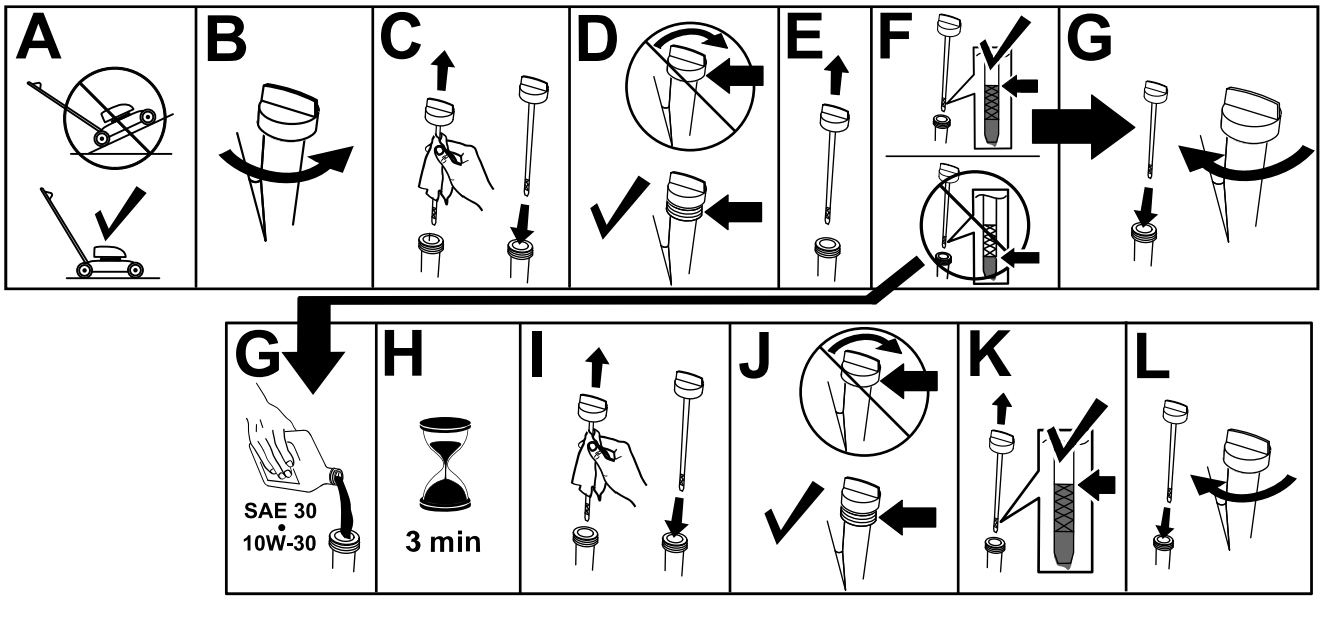


**Figure 4**

# 3

# Assembling the Grass Bag

**No Parts Required**

## Procedure

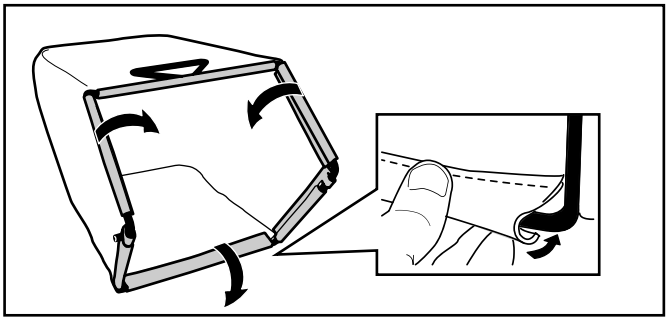

g238450

**Figure 5**

# Product Overview

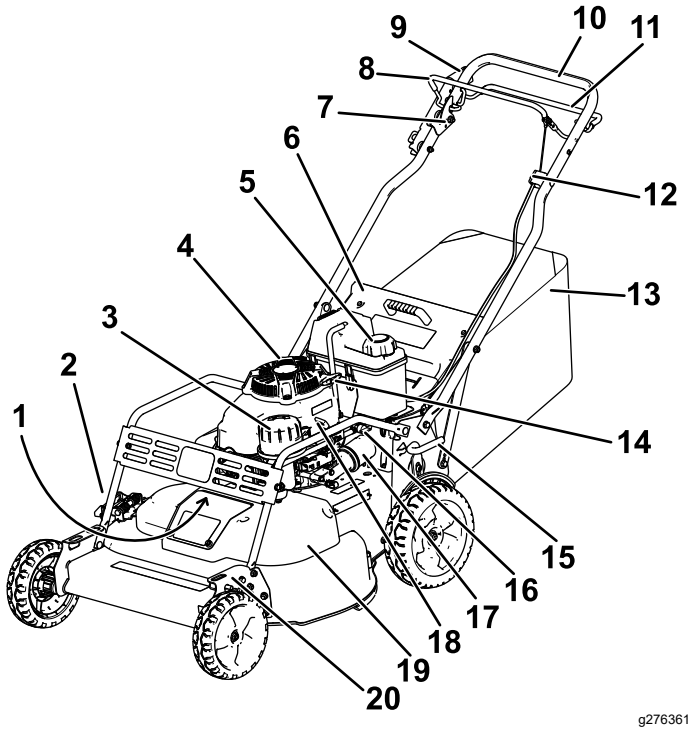


**Figure 6**

1. Spark plug (under brush guard)
2. Side-discharge deflector
3. Air filter
4. Oil fill/dipstick
5. Fuel-tank cap
6. Rear deflector
7. Blade-control-lock lever
8. Blade-control bar
9. Parking brake
10. Handle
11. Drive bail
12. Self-propel adjustment
13. Grass bag
14. Recoil-start handle
15. Rear cutting-height lever
16. Fuel-shutoff valve
17. Oil filter
18. Throttle lever
19. Belt cover
20. Front cutting-height lever

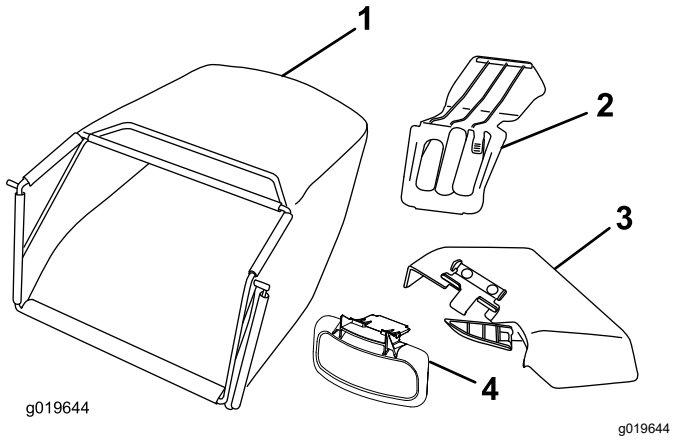


**Figure 7**

1. Grass bag
2. Rear-discharge plug
3. Side-discharge chute
4. Side-discharge deflector

# Controls

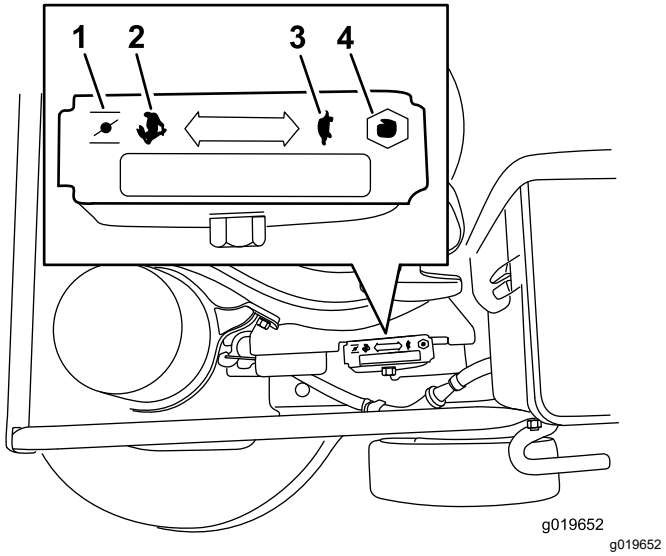


**Figure 8**

Throttle (Throttle lever not shown for the sake of clarity)

1. Choke
2. Fast
3. Slow
4. Off

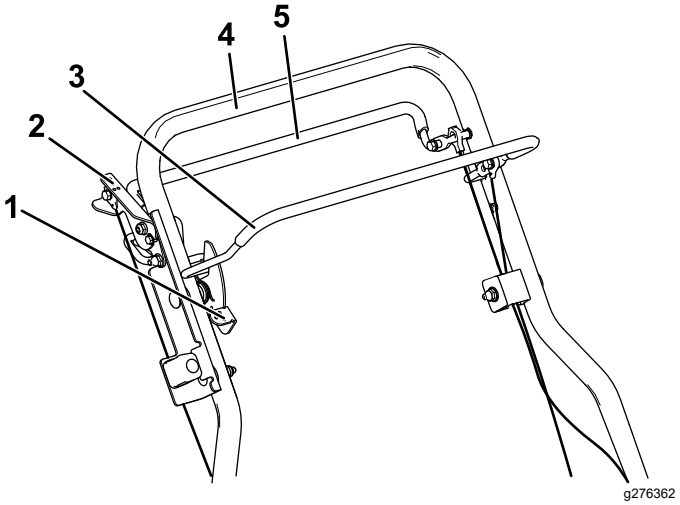


**Figure 9**

1. Blade-control-lock lever
2. Parking brake
3. Blade-control bar
4. Handle
5. Drive bar

# Specifications

| Model | Weight | Length | Width | Height |
|---|---|---|---|---|
| 22215 | 85 kg (187 lb) | 170 cm (67 inches) | 81 cm (32 inches) | 99 cm (39 inches) |

## Attachments/Accessories

A selection of Toro approved attachments and accessories is available for use with the machine to enhance and expand its capabilities. Contact your Authorized Service Dealer or authorized Toro distributor or go to www.Toro.com for a list of all approved attachments and accessories.

To ensure optimum performance and continued safety certification of the machine, use only genuine Toro replacement parts and accessories. Replacement parts and accessories made by other manufacturers could be dangerous, and such use could void the product warranty.

# Operation

**Note:** Determine the left and right sides of the machine from the normal operating position.

# *Before Operation*

## Before Operation Safety

### General Safety

- Always shut off the machine, wait for all moving parts to stop, and allow the machine to cool before adjusting, servicing, cleaning, or storing it.
- Become familiar with the safe operation of the equipment, operator controls, and safety signs.
- Check that all guards and safety devices, such as deflectors and/or grass catcher, are in place and functioning properly.
- Always inspect the machine to ensure that the blades and blade bolts are not worn or damaged.
- Inspect the area where you will use the machine, and remove all objects that could interfere with the operation of the machine or that the machine could throw.
- Contact with the moving blade will cause serious injury. Do not put your fingers under the housing when adjusting the cutting height.

### Fuel Safety

- Fuel is extremely flammable and highly explosive. A fire or explosion from fuel can burn you and others and can damage property.
  - To prevent a static charge from igniting the fuel, place the container and/or machine directly on the ground before filling, not in a vehicle or on an object.
  - Fill the fuel tank outdoors, in an open area, when the engine is cold. Wipe up any fuel that spills.
  - Do not handle fuel when smoking or around an open flame or sparks.
  - Do not remove the fuel cap or add fuel to the tank while the engine is running or hot.
  - If you spill fuel, do not attempt to start the engine. Avoid creating a source of ignition until the fuel vapors have dissipated.
  - Store fuel in an approved container and keep it out of the reach of children.
- Fuel is harmful or fatal if swallowed. Long-term exposure to vapors can cause serious injury and illness.
  - Avoid prolonged breathing of vapors.
  - Keep your hands and face away from the nozzle and the fuel-tank opening.
  - Keep fuel away from your eyes and skin.

## Filling the Fuel Tank

| | |
|---|---|
| Type | Unleaded gasoline |
| Minimum octane rating | 87 (US) or 91 (research octane; outside the US) |
| Ethanol | No more than 10% by volume |
| Methanol | None |
| MTBE (methyl tertiary butyl ether) | Less than 15% by volume |
| Oil | Do not add to the fuel |

Use only clean, fresh (no more than 30 days old), fuel from a reputable source.

***Important:*** **To reduce starting problems, add fuel stabilizer/conditioner to fresh fuel as directed by the fuel-stabilizer/conditioner manufacturer.**

Fill the fuel tank as shown in Figure 10.

**Note:** The capacity of the fuel tank is 3.76 L (0.99 US gallon).

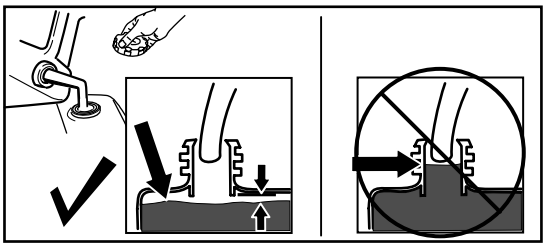

g230458

**Figure 10**

# Checking the Engine-Oil Level

**Service Interval:** Before each use or daily

***Important:*** **If the oil level in the crankcase is too low or too high and you run the engine, you may damage the engine.**

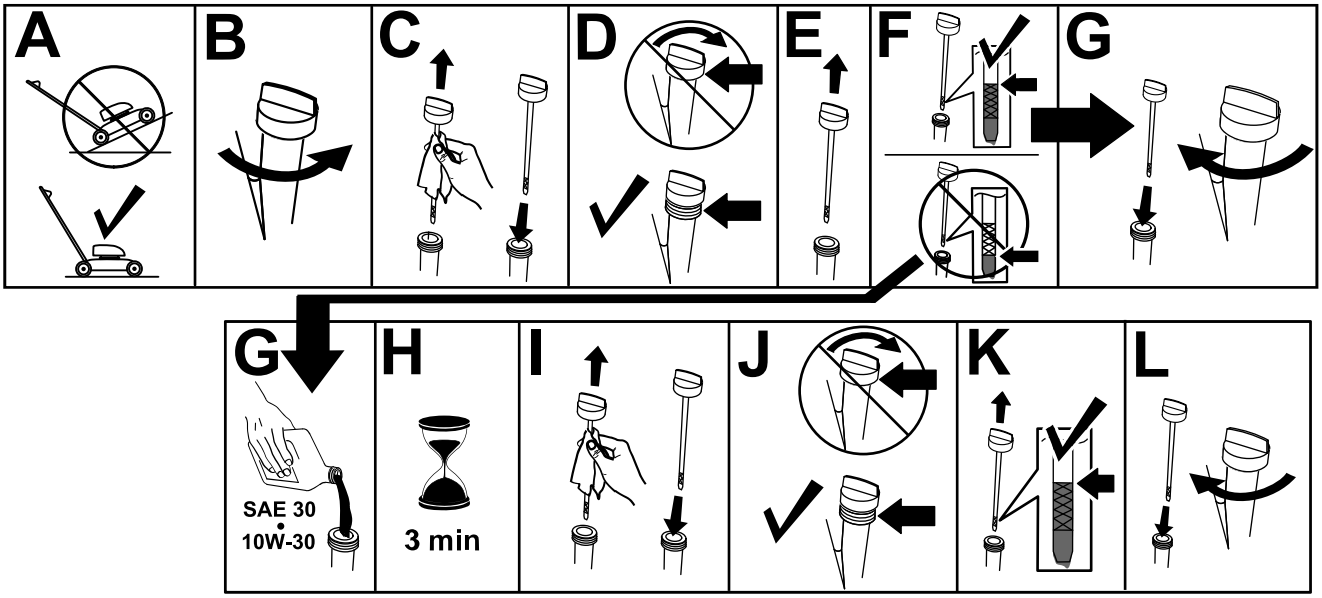


g235721

**Figure 11**

# Adjusting the Handle Height

You can raise or lower the handle in 1 of 3 positions that is more comfortable for you (Figure 12).

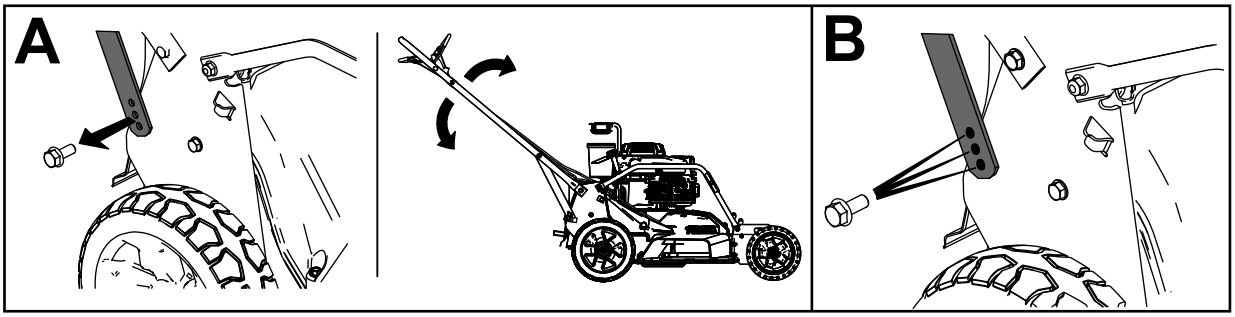


g235868

**Figure 12**

1. Remove both handle bolts and corresponding nuts.
2. Move the handle to the desired height position.
3. Secure the handle with the previously removed bolts and corresponding nuts.

# Adjusting the Cutting Height

The cutting height is controlled with a front lever and a rear lever, both on the left side of the machine. To raise or lower the machine, engage the lever, raise or lower the machine, and then disengage the lever.

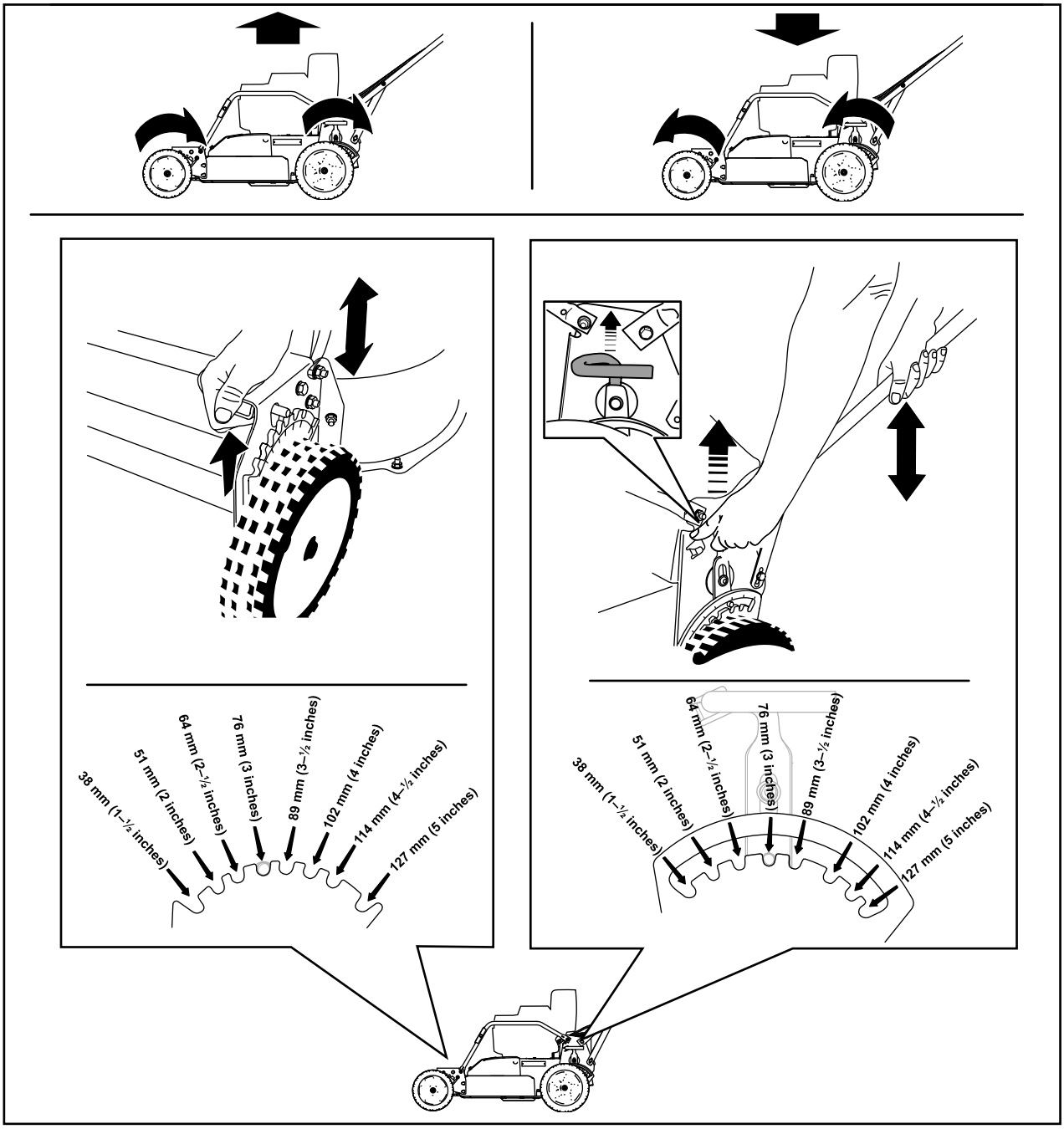


g232160

**Figure 13**

# Checking the Blade-Stop System Operation

Before each use, check that the blades stop within 3 seconds of releasing the control bar.

## Using the Grass Bag

**Service Interval:** Before each use or daily—Check the blade-stop system operation. The blades should stop within 3 seconds of releasing the control bar; if they do not, contact an Authorized Service Dealer.

You can use the grass bag to check the blade-stop system.

1. Remove the rear-discharge plug.
2. Install the empty grass bag on the machine.
3. Start the engine.
4. Engage the blades.

   **Note:** The bag should begin to inflate, indicating that the blades are rotating.
5. While watching the bag, release the control bar.

   **Note:** If the bag does not deflate within 3 seconds of releasing the control bar, the blade-stop system may be deteriorating and, if ignored, could result in an unsafe operating condition. Have the machine inspected and serviced by an Authorized Service Dealer.
6. Shut off the engine and wait for all moving parts to stop.

## Not Using the Grass Bag

1. Move the machine onto a paved surface in a non-windy area.
2. Set all 4 wheels to the 3-1/2 inch (89 mm) cutting height setting.
3. Take a half sheet of newspaper and crumple it into a ball small enough to go under the machine (about 3 inches or 75 mm in diameter).
4. Place the newspaper ball about 5 inches (13 cm) in front of the machine.
5. Start the engine.
6. Engage the blades.
7. Release the control bar and begin counting out 3 seconds.
8. On the count of 3, push the machine quickly forward over the newspaper.
9. Shut off the engine and wait for all moving parts to stop.
10. Go to the front of the machine and check the newspaper ball.

    **Note:** If the newspaper ball did not go under the machine, repeat steps 4 through 10.

    ***Important:*** **If the newspaper is unravelled or shredded, the blades did not stop properly, which could result in an unsafe operating condition. Contact an Authorized Service Dealer.**

# *During Operation*

# During Operation Safety

## General Safety

- Wear appropriate clothing, including eye protection; long pants; substantial, slip-resistant footwear; and hearing protection. Tie back long hair and do not wear loose clothing or loose jewelry.
- Use your full attention while operating the machine. Do not engage in any activity that causes distractions; otherwise, injury or property damage may occur.
- Do not operate the machine while ill, tired, or under the influence of alcohol or drugs.
- The blade is sharp; contacting the blade can result in serious personal injury. Shut off the engine and wait for all moving parts to stop before leaving the operating position.
- When you release the blade-control bar, the engine should shut off and the blade should stop within 3 seconds. If not, stop using your machine immediately and contact an Authorized Service Dealer.
- Keep bystanders out of the operating area. Keep small children out of the operating area and under the watchful care of a responsible adult who is not operating the machine. Stop the machine if anyone enters the area.
- Always look down and behind you before moving the machine in reverse.
- Operate the machine only in good visibility and appropriate weather conditions. Do not operate the machine when there is the risk of lightning.
- Wet grass or leaves can cause serious injury if you slip and contact the blade. Avoid mowing in wet conditions.
- Use extreme care when approaching blind corners, shrubs, trees, or other objects that may block your view.

- Do not direct the discharge material toward anyone. Avoid discharging material against a wall or obstruction; material may ricochet toward you. Stop the blade(s) when crossing gravel surfaces.
- Watch for holes, ruts, bumps, rocks, or other hidden objects. Uneven terrain could cause you to lose your balance or footing.
- If the machine strikes an object or starts to vibrate, immediately shut off the engine, wait for all moving parts to stop, and disconnect the wire from the spark plug before examining the machine for damage. Make all necessary repairs before resuming operation.
- Before leaving the operating position, shut off the engine and wait for all moving parts to stop.
- If the engine has been running, it will be hot and can severely burn you. Keep away from the hot engine.
- Operate the engine only in well-ventilated areas. Exhaust gases contain carbon monoxide, which is lethal if inhaled.
- Check the grass catcher components and the discharge chute frequently for any wear or deterioration and replace them with genuine Toro parts when necessary.

## Slope Safety

- Mow across the face of slopes; never up and down. Use extreme caution when changing direction on slopes.
- Do not mow on excessively steep slopes. Poor footing could cause a slip-and-fall accident.
- Mow with caution near drop-offs, ditches, or embankments.

# Starting the Engine

1. Connect the wire to the spark plug (Figure 6).
2. Open the fuel-shutoff valve (Figure 14).

   **Note:** When the fuel-shutoff valve is open, the lever is parallel with the fuel line.

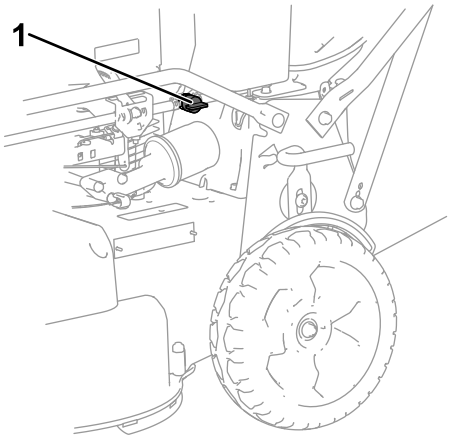


g276446

**Figure 14**

1. Fuel-shutoff valve

3. Move the throttle control to the CHOKE position (A of Figure 15).
4. Pull the starter handle lightly until you feel resistance, then pull it sharply (B of Figure 15).
5. Move the throttle control lever to the FAST position when the engine starts (C of Figure 15).

   **Note:** If the engine fails to start after 3 pulls, repeat steps 3 through 5.

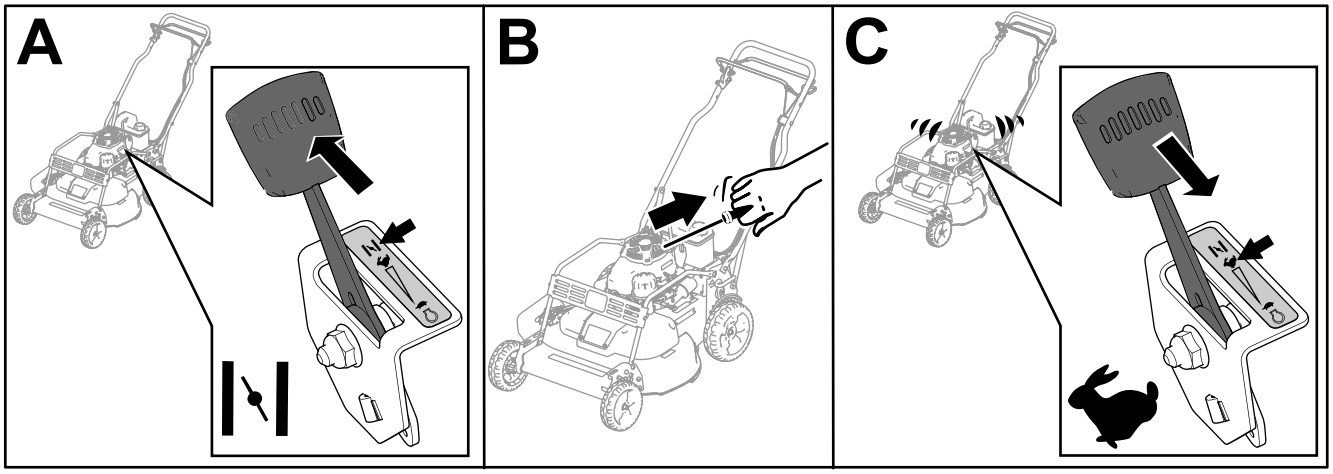


g232243

**Figure 15**

# Operating the Self-Propel Drive and Engaging the Blades

To operate the self-propel drive, pull and hold the drive bail to the handle (Figure 16).

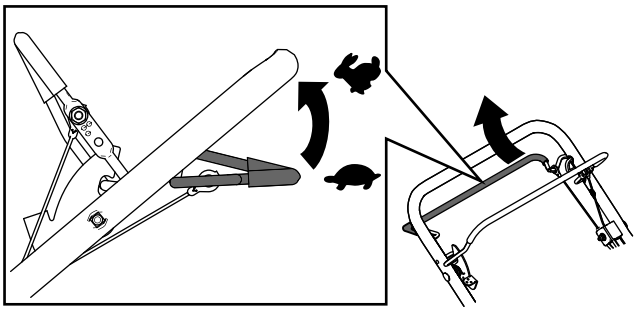

g237184

**Figure 16**

To engage the blades, do the following:

1. Push and hold the blade-control lock lever forward to release the blade-control bail (A of Figure 17).
2. Pull the blade-control bail to the handle and release the blade-control-lock lever; the blade should engage (A of Figure 17).
3. Release the blade-control bail to disengage the blade (B of Figure 17). The blade-control-lock lever resets to lock the blade-control bail.

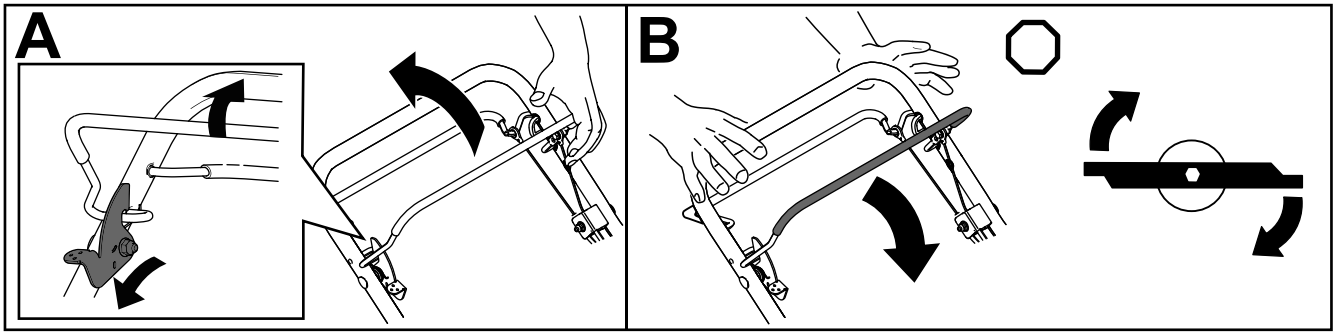


g237185

**Figure 17**

# Shutting Off the Engine

1. Move the throttle control to the OFF position and wait for all moving parts to stop.
2. Close the fuel-shutoff valve and disconnect the wire from the spark plug if you do not use the machine or leave it unattended.

# Engaging the Parking Brake

Engage the parking brake by pulling the brake lever up toward the handle (Figure 18).

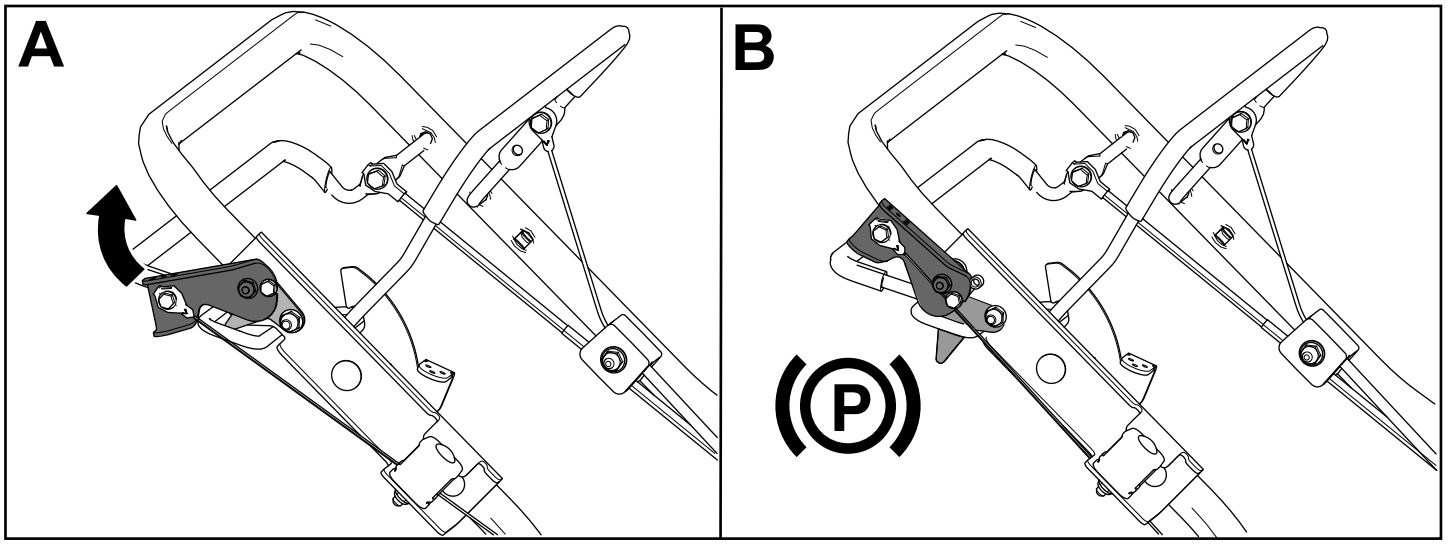


g276567

**Figure 18**

# Disengaging the Parking Brake

Disengage the parking brake by pushing the brake lever down away from the handle (Figure 19).

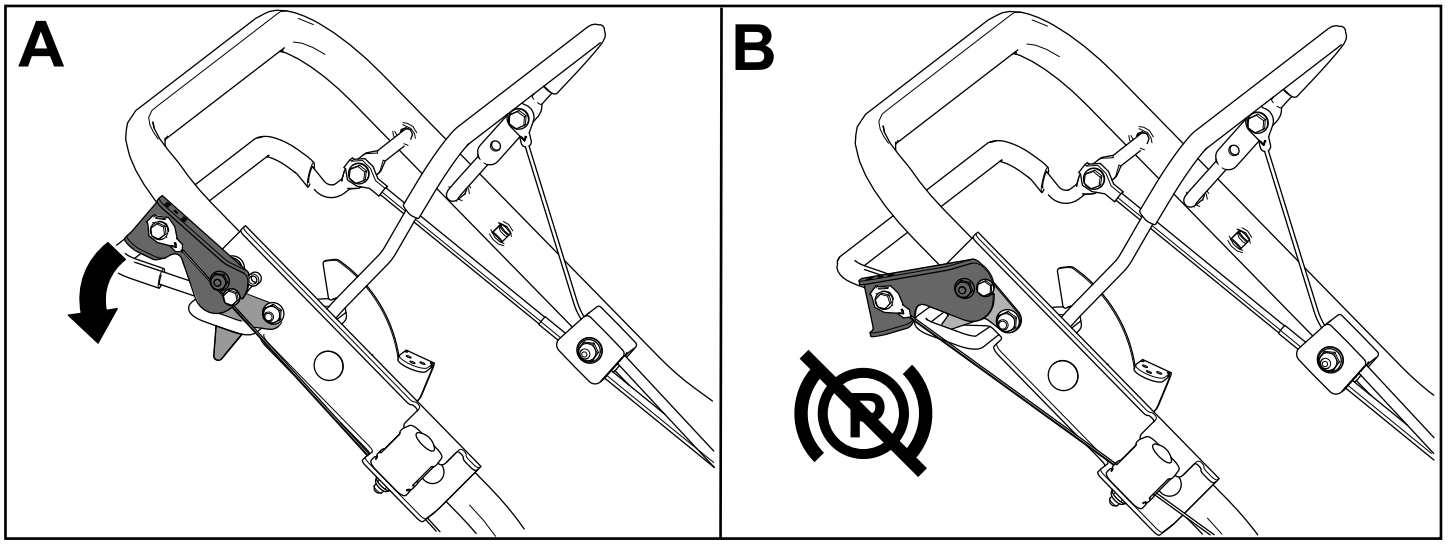


g276568

**Figure 19**

# Recycling the Clippings

This machine comes from the factory ready to recycle grass and leaf clippings back into the lawn. To prepare the machine to recycle:

- If the side-discharge chute is on the machine, remove it and install the side-discharge deflector; refer to Removing the Side-Discharge Chute (page 18).
- If the grass bag is on the machine, remove it; refer to Removing the Grass Bag (page 17).
- If the rear-discharge plug is not installed, grip it by the handle, raise the rear deflector, and insert it into the rear-discharge chute until the latch locks into place; refer to Figure 20.

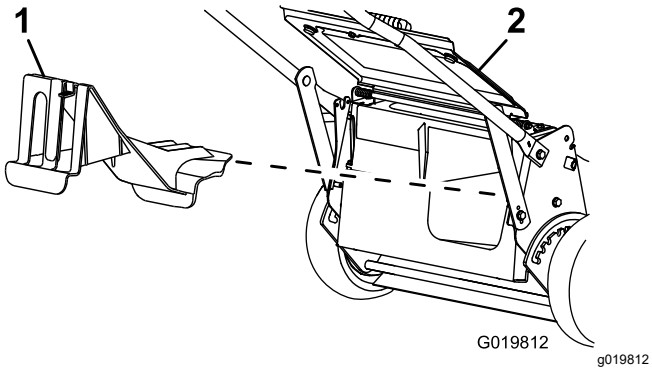


**Figure 20**

1. Rear-discharge plug
2. Rear deflector

# Bagging the Clippings

Use the grass bag when you want to collect grass and leaf clippings from the lawn.

If the side-discharge chute is on the machine, remove it and install the side-discharge deflector before bagging the clippings; refer to Removing the Side-Discharge Chute (page 18).

## Installing the Grass Bag

1. Raise and hold up the rear deflector (A of Figure 21).
2. Remove the rear-discharge plug by pulling down on the latch with your thumb and pulling the plug out from the machine (B of Figure 21).
3. Install the bag rod into the notches at the base of the handle, and rock the bag back and forth to ensure that the rod is seated at the bottom of both notches (C of Figure 21).
4. Lower the rear deflector until it rests on the grass bag.

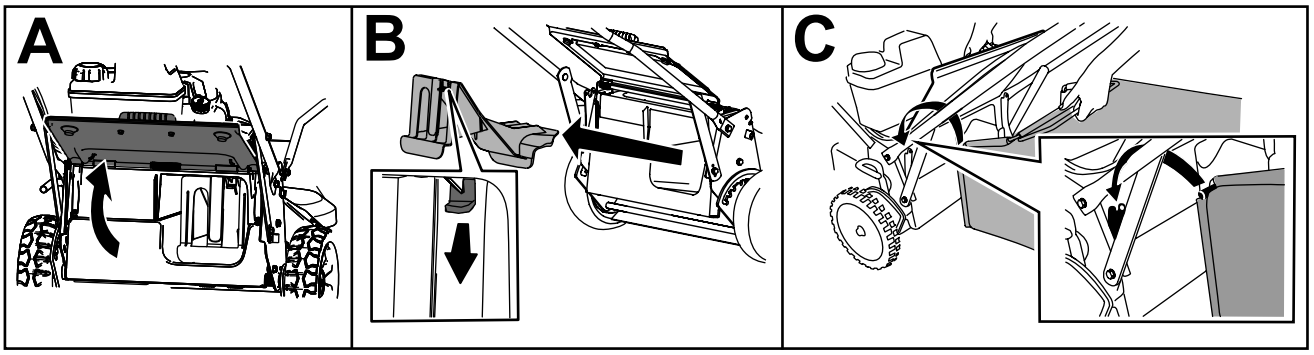


g235892

**Figure 21**

## Removing the Grass Bag

To remove the bag, reverse the steps in Installing the Grass Bag (page 17).

# Side-Discharging the Clippings

Use the side discharge for cutting very tall grass.

## Installing the Side-Discharge Chute

***Important:*** **Ensure that the rear-discharge plug is in place before you recycle the clippings.**

1. Shut off the engine and wait for all moving parts to stop.
2. Remove the grass bag if it is installed on the machine; refer to Removing the Grass Bag (page 17).
3. Insert the rear-discharge plug (A of Figure 22).
4. Remove the side-discharge deflector by pulling up on the spring that holds the deflector in place and removing the deflector (B and C of Figure 22).
5. Install the side-discharge chute by pulling up on the spring, placing the chute over the opening, and lowering the spring over the tabs on top of the discharge chute (D and E of Figure 22).

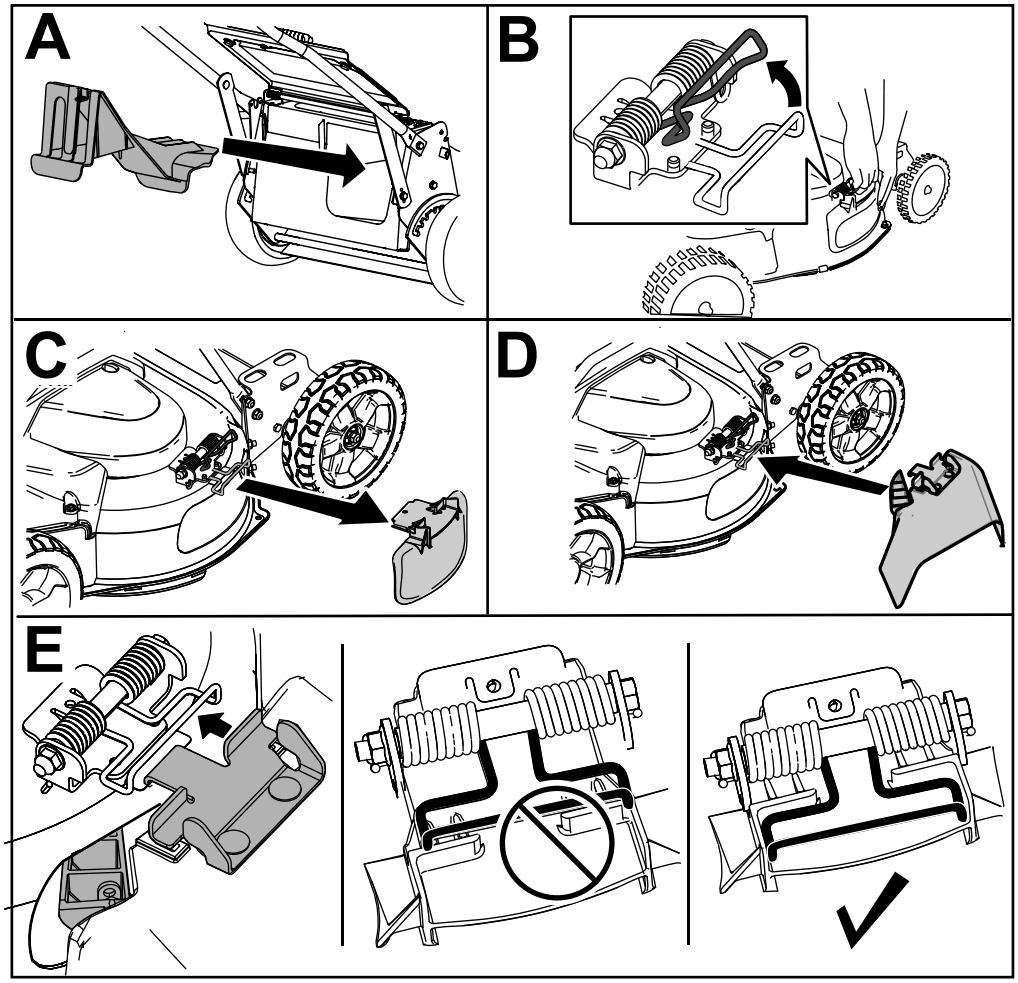


g235903

**Figure 22**

## Removing the Side-Discharge Chute

To remove the side-discharge chute, reverse the steps in Installing the Side-Discharge Chute (page 18).

# Operating Tips

## General Tips

- Review the safety instructions and read this manual carefully before operating the machine.
- Clear the area of sticks, stones, wire, branches, and other debris that the blades could hit and throw.
- Keep everyone, especially children and pets, away from the area of operation.
- Avoid striking trees, walls, curbs, or other solid objects. Never deliberately mow over any object.
- If the machine strikes an object or starts to vibrate, immediately shut off the engine, disconnect the wire from the spark plug, and examine the machine for damage.
- Maintain sharp blades throughout the cutting season. Periodically file down nicks on the blades.
- Replace the blades when necessary with original Toro replacement blades.
- Mow only dry grass or leaves. Wet grass and leaves tend to clump on the yard and can cause the machine to plug or the engine to stall.
- Clean the underside of the machine deck after each mowing. Refer to Cleaning under the Machine (page 19).
- Keep the engine in good running condition.
- Set the engine speed to the fastest position for the best cutting results.
- Clean the air filter frequently. Mulching stirs up more clippings and dust which clogs the air filter and reduces engine performance.

## Cutting Grass

- Grass grows at different rates at different times of the year. In the summer heat, it is best to cut grass at the 51 mm (2 inch), 64 mm (2-1/2 inch), or 83 mm (3 inch) cutting-height settings. Cut only about a third of the grass blade at a time. Do not cut below the 51 mm (2 inch) setting unless the grass is sparse or it is late fall when grass growth begins to slow down.
- When cutting grass over 15 cm (6 inches) tall, first mow at the highest cutting-height setting and walk slower; then mow again at a lower setting for the best lawn appearance. If the grass is too long and the leaves clump on top of the lawn, the machine may plug and cause the engine to stall.
- Alternate the mowing direction. This helps disperse the clippings over the lawn for even fertilization.

If the finished lawn appearance is unsatisfactory, try 1 or more of the following:

- Sharpen the blades.
- Walk at a slower pace while mowing.
- Raise the cutting height on your machine.
- Cut the grass more frequently.
- Overlap cutting swaths instead of cutting a full swath with each pass.

## Cutting Leaves

- After cutting the lawn, ensure that half of the lawn shows through the cut leaf cover. You may need to make more than a single pass over the leaves.
- For light leaf coverage, set all the wheels at the same cutting-height setting.
- Slow down your mowing speed if the machine does not cut the leaves finely enough.

# *After Operation*

# After Operation Safety

## General Safety

- Always shut off the machine, wait for all moving parts to stop, and allow the machine to cool before adjusting, servicing, cleaning, or storing it.
- Clean grass and debris from the machine to help prevent fires. Clean up oil or fuel spills.
- Never store the machine or fuel container where there is an open flame, spark, or pilot light, such as on a water heater or on other appliances.

## Hauling Safety

- Use care when loading or unloading the machine.
- Secure the machine from rolling.
- Close the fuel valve before loading the machine for hauling.

# Cleaning under the Machine

For optimal cutting performance, keep the underside of the machine housing clean. You may either wash or scrape the clippings away from under the machine housing.

## Washing under the Machine

**Service Interval:** After each use—Clean under the machine housing.

1. Position the machine on a flat concrete or asphalt surface near a garden hose.

2. Start the engine.
3. Hold the running garden hose at handle level and direct the water to flow on the ground just in front of the right rear wheel (Figure 23).

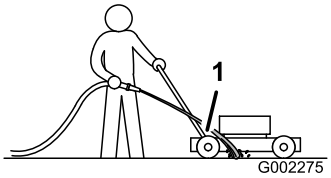


g002275

**Figure 23**

1. Right rear wheel

**Note:** The blades will draw in water and wash out clippings. Let the water run until you no longer see clippings being washed out from under the machine.

4. Shut off the engine and wait for all moving parts to stop.
5. Turn off the water.
6. Start the machine and let it run for a few minutes to dry out the moisture on the machine and its components.

## Scraping under the Machine

If washing does not remove all debris from under the machine, scrape it clean.

1. Disconnect the wire from the spark plug.
2. Drain the fuel from the fuel tank; refer to Emptying the Fuel Tank and Cleaning the Filter (page 24).
3. Tip the machine onto its side, with the air filter up in the air, until the upper handle rests on the ground.
4. Remove the dirt and grass clippings with a hardwood scraper; avoid burrs and sharp edges.
5. Turn the machine upright.
6. Fill the fuel tank.
7. Connect the wire to the spark plug.

# Cleaning the Wheels

**Service Interval:** Every 40 hours

1. Remove the rear wheels and clean any debris from the wheel-gear area.

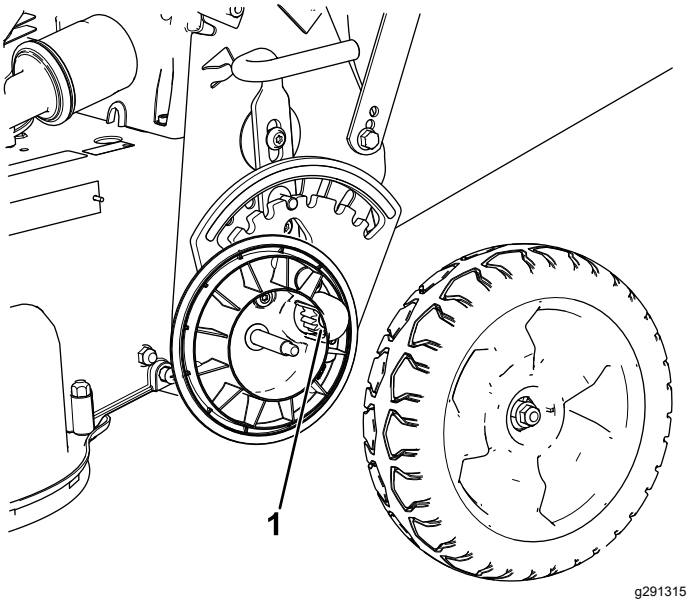


g291315

**Figure 24**

1. Gears

2. After cleaning, apply a small amount of anti-seize to the gears.

   **Note:** If you are operating the machine in extreme conditions, cleaning the wheels more frequently than recommended will result in increased gear life.

   **Note:** To prevent damage to the bearing seals, do not use a high pressure water sprayer on the bearings.

# Maintenance

## Recommended Maintenance Schedule(s)

| Maintenance Service Interval | Maintenance Procedure |
|---|---|
| After the first 5 hours | • Change the engine oil without the oil filter.<br>• Service the blade-drive system. |
| Before each use or daily | • Check the engine-oil level and add oil as needed.<br>• Check the blade-stop system operation. The blades should stop within 3 seconds of releasing the control bar; if they do not, contact an Authorized Service Dealer.<br>• Inspect the air filter.<br>• Check the blades and service them, if necessary.<br>• Inspect the blades.<br>• Check the parking-brake function. |
| After each use | • Clean under the machine housing. |
| Every 25 hours | • Clean the foam pre-cleaner (more frequently in dusty conditions). |
| Every 40 hours | • Clean the wheels and gears. |
| Every 50 hours | • Change the engine oil (more often in dusty conditions).<br>• Check the condition of the belts.<br>• Check the fuel hose and replace it if necessary.<br>• Remove debris from under the belt cover.<br>• Service the blade-drive system. |
| Every 100 hours | • Change the oil filter.<br>• Check the spark plug.<br>• Clean the fuel-tank filter.<br>• Change the fuel filter. |
| Every 250 hours | • Change the blade-brake-clutch belt.<br>• Change the transmission belt. |
| Every 300 hours | • Replace the paper air filter (more frequently in dusty conditions). |
| Yearly or before storage | • Empty the fuel tank before repairs as director or before storage. |

***Important:*** **Refer to your engine owner's manual for additional maintenance procedures.**

## Maintenance Safety

- Disconnect the spark-plug wire from the spark plug before performing any maintenance procedure.
- Wear gloves and eye protection when servicing the machine.
- The blade is sharp; contacting the blade can result in serious personal injury. Wear gloves when servicing the blade. Do not repair or alter the blade(s).
- Never tamper with safety devices. Check their proper operation regularly.
- Tipping the machine may cause the fuel to leak. Fuel is flammable and explosive, and can cause personal injury. Run the engine dry or remove the fuel with a hand pump; never siphon the fuel.
- To ensure optimum performance of the machine, use only genuine Toro replacement parts and accessories. Replacement parts and accessories made by other manufacturers could be dangerous, and such use could void the product warranty.

# Servicing the Air Filter

**Service Interval:** Before each use or daily

Every 25 hours—Clean the foam pre-cleaner (more frequently in dusty conditions).

Every 300 hours—Replace the paper air filter (more frequently in dusty conditions).

***Important:*** **Do not operate the engine without the air filter assembly; extreme engine damage will occur.**

1. Shut off the engine and wait for all moving parts to stop.
2. Disconnect the wire from the spark plug.
3. Remove the cover and clean it thoroughly (Figure 25).

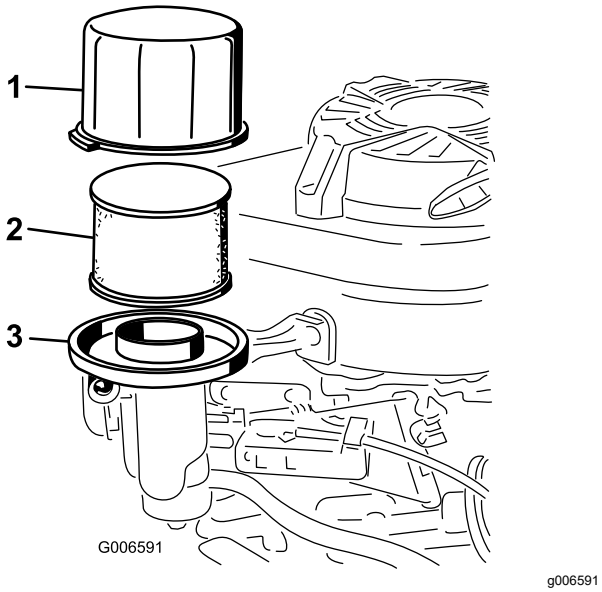


**Figure 25**

1. Cover
2. Foam pre-filter and paper filter
3. Air-filter base

4. Remove the foam pre-filter from the paper filter (Figure 25), and replace the paper filter if it is excessively dirty.

   ***Important:*** **Do not try to clean a paper filter.**

5. Wash the foam pre-cleaner with a mild detergent and water, then blot it dry.

   **Note:** Do not add oil to the foam pre-cleaner.

6. Install the foam pre-cleaner onto the paper filter.
7. Install the air-filter assembly.
8. Install the cover.

# Changing the Engine Oil

**Service Interval:** After the first 5 hours—Change the engine oil without the oil filter.

Every 50 hours—Change the engine oil (more often in dusty conditions).

**Note:** Run the engine a few minutes before changing the oil to warm it. Warm oil flows better and carries more contaminants.

## Engine Oil Specifications

| | |
|---|---|
| **Engine oil capacity** | 0.65 L (22 fl oz) without oil filter; 0.85 L (29 fl oz) with oil filter |
| **Oil viscosity** | SAE 30 or SAE 10W-30 detergent oil |
| **API service classification** | SJ or higher |

1. Move the machine to a level surface.
2. Refer to Maintenance Safety (page 21).
3. Remove the dipstick by rotating the cap counterclockwise and pulling it out (Figure 26).

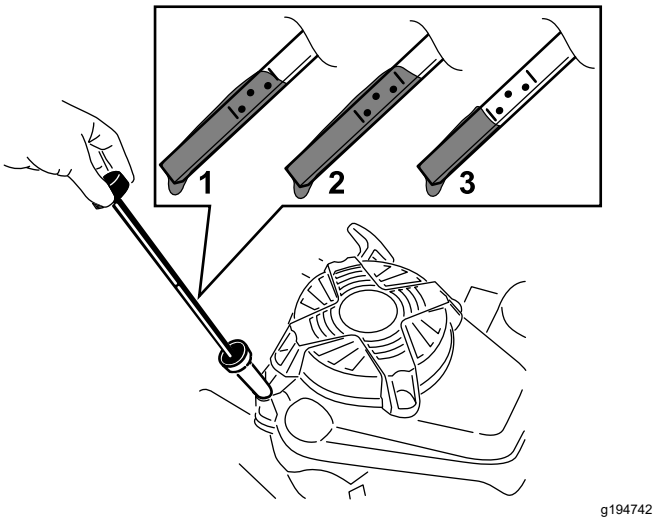


**Figure 26**

1. Full
2. High
3. Low

4. Tip the machine onto its side (so that the air filter is up) to drain the used oil from the oil-fill tube (Figure 27).

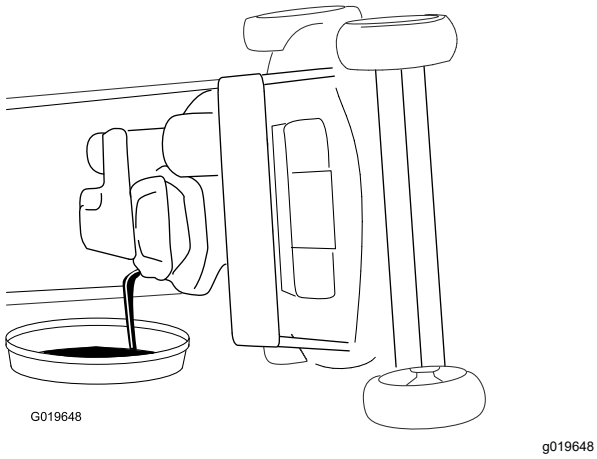


**Figure 27**

5. After draining the used oil, return the machine to the operating position.
6. Carefully pour about 3/4 of the engine capacity of oil into the oil-fill tube.
7. Wait 3 minutes for the oil to settle in the engine.
8. Wipe the dipstick clean with a clean cloth.
9. Insert the dipstick into the oil-fill tube, then remove the dipstick.
10. Read the oil level on the dipstick (Figure 26).
    - If the oil level on the dipstick is too low, carefully pour a small amount of oil into the oil-fill tube, wait 3 minutes, and repeat steps 8 through 10 until the oil level on the dipstick is correct.
    - If the oil level on the dipstick is too high, drain the excess oil until the oil level on the dipstick is correct.

    ***Important:*** **If the oil level in the engine is too low or too high and you run the engine, you may damage the engine.**
11. Install the dipstick securely.
12. Recycle the used oil properly.

# Changing the Oil Filter

**Service Interval:** Every 100 hours

1. Run the engine to warm the oil.
2. Shut off the engine and wait for all moving parts to stop.
3. Disconnect the wire from the spark plug.
4. Drain the engine oil; refer to Changing the Engine Oil (page 22).
5. Place a rag under the oil filter to catch any oil that may leak out as you remove the filter.
6. Remove the oil filter (Figure 28).

   **Note:** Make sure that the oil-filter gasket comes off with the filter.

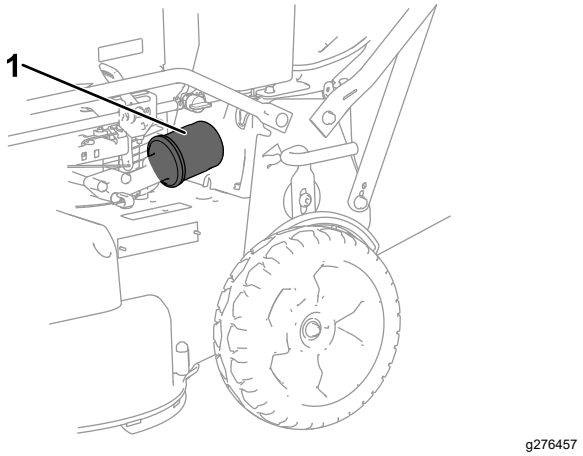


**Figure 28**

1. Oil filter

7. Use your finger to coat the gasket on the new filter with oil (Figure 29).

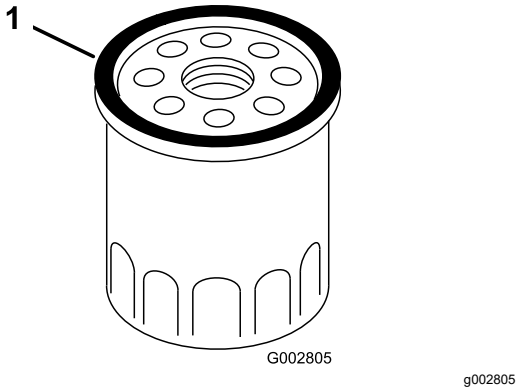


**Figure 29**

1. Gasket

8. Install the new filter until the gasket contacts the filter base, then hand tighten the filter an additional 2/3 turn.
9. Fill the crankcase to the correct level on the dipstick with fresh oil; refer to 2 Adding Oil to the Engine (page 6).
10. Connect the wire to the spark plug.
11. Run the engine for about 3 minutes.
12. Shut off the engine, wait for all moving parts to stop, and check for oil leakage around the filter.
13. Add oil to compensate for the oil in the oil filter; refer to 2 Adding Oil to the Engine (page 6)
14. Recycle the used oil filter according to local codes.

# Servicing the Spark Plug

**Service Interval:** Every 100 hours

Use an **NGK BPR5ES** spark plug or equivalent.

1. Shut off the engine and wait for all moving parts to stop.
2. Disconnect the wire from the spark plug.
3. Clean around the spark plug.
4. Remove the spark plug from the cylinder head.

   ***Important:*** **Replace a cracked, fouled, or dirty spark plug. Do not clean the electrodes because grit entering the cylinder can damage the engine.**
5. Set the gap on the plug to 0.76 mm (0.030 inch); refer to Figure 30.

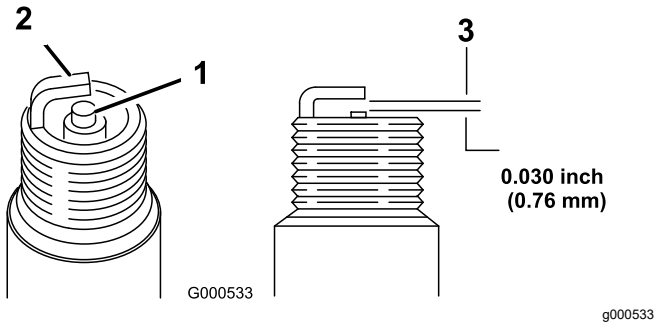


**Figure 30**

1. Center-electrode insulator
2. Side electrode
3. Air gap (not to scale)

6. Install the spark plug and the gasket seal.
7. Torque the plug to 23 N·m (17 ft-lb).
8. Connect the wire to the spark plug.

# Checking the Condition of the Belts

**Service Interval:** Every 50 hours

1. Shut off the engine and wait for all moving parts to stop.
2. Remove the belt cover (Figure 6) by removing the 4 bolts that hold it to the machine housing.
3. Check the belts for any cracks, frayed edges, burn marks, or any other damage.
4. Replace all damaged belts.
5. If you replace the blade-drive belt, you must adjust it. Refer to Servicing the Blade-Drive System (page 25).
6. Install the belt cover with the 4 bolts that you removed in step 2.

# Emptying the Fuel Tank and Cleaning the Filter

**Service Interval:** Every 50 hours—Check the fuel hose and replace it if necessary.

Every 100 hours—Clean the fuel-tank filter.

Yearly or before storage—Empty the fuel tank before repairs as director or before storage.

**Note:** The fuel-tank filter (screen) element is located inside the fuel tank at the outlet. This filter is a part of the fuel tank and cannot be removed.

1. Shut off the engine and wait for it to cool down.

   ***Important:*** **Drain fuel from a cold engine only.**
2. Disconnect the wire from the spark plug.
3. Close the fuel-shutoff valve.
4. Disconnect the fuel line by loosening the tube clamp at the carburetor.
5. Open the fuel-shutoff valve and drain the fuel completely from the tank and fuel line into an approved fuel container.
6. Remove the fuel tank from the machine.
7. Pour a small amount of fuel in the fuel tank, move the fuel around in the tank, and pour it out into an approved fuel container.
8. Install the fuel tank and the fuel line.

# Changing the Fuel Filter

**Service Interval:** Every 100 hours

1. Shut off the engine and wait for all moving parts to stop.
2. Disconnect the wire from the spark plug.
3. Close the fuel-shutoff valve (Figure 31).

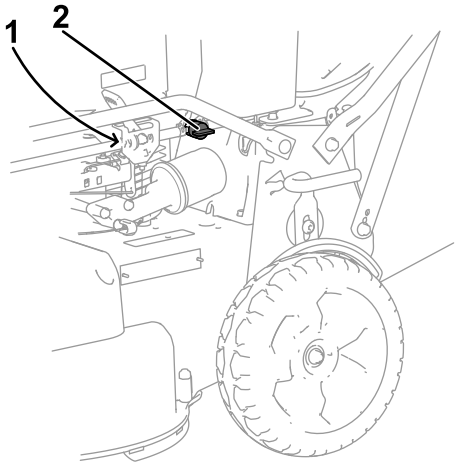


g277609

**Figure 31**

1. Fuel filter (not shown)
2. Fuel-shutoff valve

4. Remove the fuel filter (Figure 31) from the fuel line by loosening the tube clamps surrounding the fuel filter.
5. Install a new fuel filter in the fuel line using the tube clamps that you removed in step 4.

# Servicing the Blade-Drive System

**Service Interval:** After the first 5 hours

Every 50 hours—Remove debris from under the belt cover.

Every 50 hours—Service the blade-drive system.

1. Loosen the 2 quarter-turn fasteners on the belt-cover-access panel and remove the panel (Figure 32).

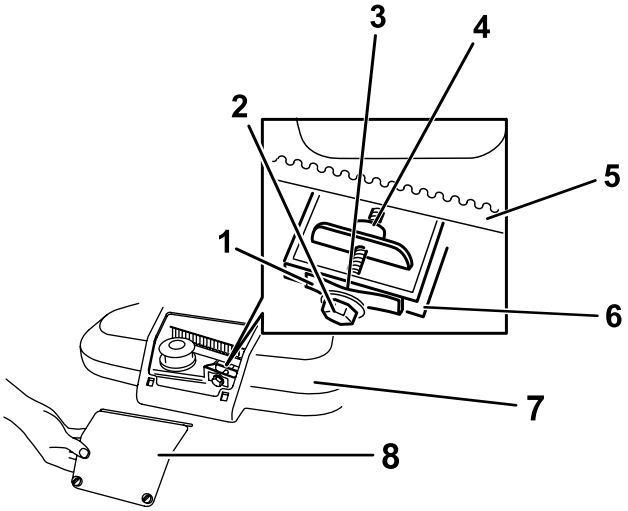


g208925

**Figure 32**

1. Belt-tension spring
2. Adjusting bolt
3. Gap
4. Adjusting nut
5. Blade-drive belt
6. Wall
7. Belt cover
8. Belt-cover-access panel

2. Brush or blow out debris from the inside of the belt cover and around all the parts.
3. Hold a feeler gauge set between 0.13 and 0.76 mm (0.005 and 0.03 inches) against the wall and slide it down behind the belt tension spring; refer to Figure 33.

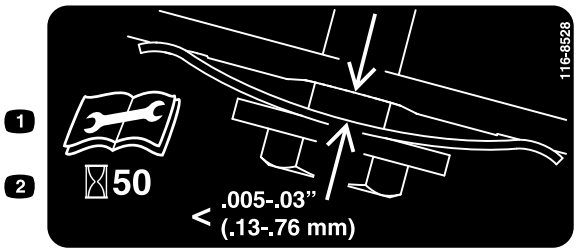


decal116-8528

**Figure 33**

1. Read the *Operator’s Manual* before performing any maintenance.
2. Check belt tension every 50 hours.

**Note:** If there is a visible gap between the gauge and the spring, tighten the adjusting bolt and the nut until the feeler gauge barely slides freely in and out of the gap (Figure 32).

***Important:*** **Do not overtighten the adjusting bolt. This could damage the blade-drive belt.**

4. Install the belt-cover-access panel.

# Servicing the Blades

**Service Interval:** Before each use or daily

***Important: You will need a torque wrench to install the blades properly.*** **If you do not have a torque wrench or are uncomfortable performing this procedure, contact an Authorized Service Dealer.**

Examine the blades for sharpness and any wear or damage whenever you run out of fuel; refer to Inspecting the Blades (page 26). If the blade edge is dull or nicked, have it sharpened or replace it. If the blades are worn, bent, damaged or cracked, replace them immediately with genuine Toro replacement blades.

**⚠ DANGER**

**A worn or damaged blade can break, and a piece of the blade could be thrown toward you or bystanders, resulting in serious personal injury or death.**

- **Inspect the blades periodically for wear or damage.**
- **Replace worn or damaged blades.**

**Note:** Maintain sharp blades throughout the cutting season, because sharp blades cut cleanly without tearing or shredding the grass blades. Tearing and shredding turns grass brown at the edges, which slows growth and increases the chance of disease.

## Preparing to Service the Cutting Blades

Tip the machine onto its side, with the air filter up in the air, until the upper handle rests on the ground.

**⚠ WARNING**

**The blades are sharp; contacting a blade could result in serious personal injury.**

- **Disconnect the wire from the spark plug.**
- **Wear gloves when servicing the blades.**

## Inspecting the Blades

**Service Interval:** Before each use or daily

1. Inspect the cutting edges (Figure 34). If the edges are not sharp or have nicks, remove the blades and have them sharpened or replace them.

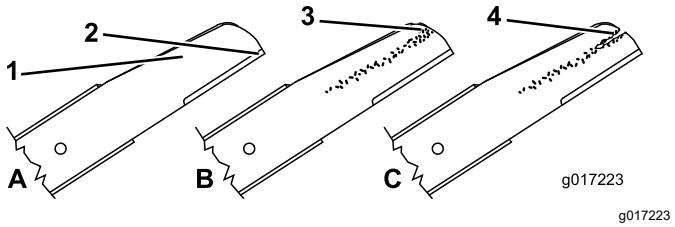


**Figure 34**

1. Curved area
2. Cutting edge
3. Wear/slot forming
4. Crack

2. Inspect the blades themselves, especially the curved area (Figure 34). If you notice any damage, wear, or a slot forming in this area, immediately replace them with new blades.

**⚠ DANGER**

**If you allow a blade to wear, a slot will form between the sail and flat part of the blade. Eventually a piece of the blade may break off and be thrown from under the housing, possibly resulting in serious injury to you or bystanders.**

- **Inspect the blades periodically for wear or damage.**
- **Never try to straighten a blade that is bent or weld a broken or cracked blade.**
- **Check for bent blades; refer to Checking for Bent Blades (page 27).**

## Checking for Bent Blades

1. Rotate the blades until they are positioned as shown in Figure 35.

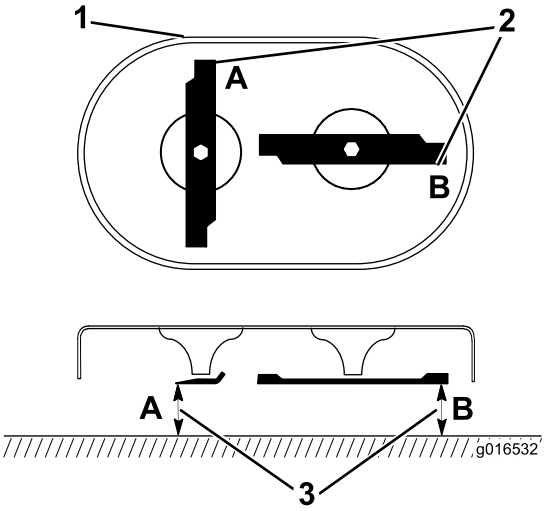


g016532

**Figure 35**

1. Front of cutting deck
2. Measure at locations A and B
3. Measure from the cutting edge to a smooth, level surface

2. Measure from a level surface to the cutting edges at locations **A** and **B**, (Figure 35), and record both dimensions.
3. Rotate the blades so that their opposite ends are at locations **A** and **B**.
4. Repeat the measurements in step 2 and record them.

   **Note:** If the difference between dimensions **A** and **B** obtained in steps 2 and 4 exceeds 1/8 inch, replace the blades; refer to Removing the Blades (page 27).

**⚠ WARNING**

**A blade that is bent or damaged could break apart and could seriously injure or kill you or bystanders.**

- **Always replace a bent or damaged blade with a new blade.**
- **Never file or create sharp notches in the edges or surfaces of a blade.**

## Removing the Blades

Replace the blades when they strike a solid object, are out of balance, bent, or worn. Use only genuine Toro replacement blades.

1. Use a block of wood to hold each blade steady and turn the blade bolt counterclockwise as shown in Figure 36.

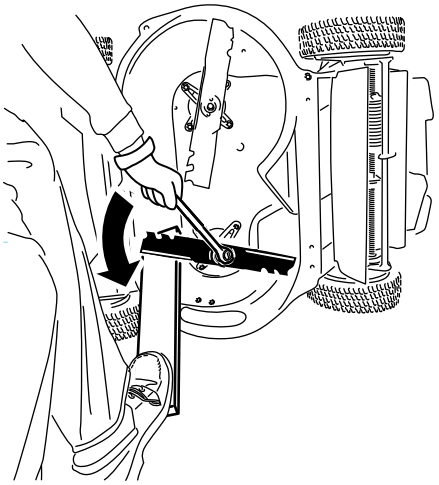

g232790

**Figure 36**

2. Remove each blade as shown in Figure 37.

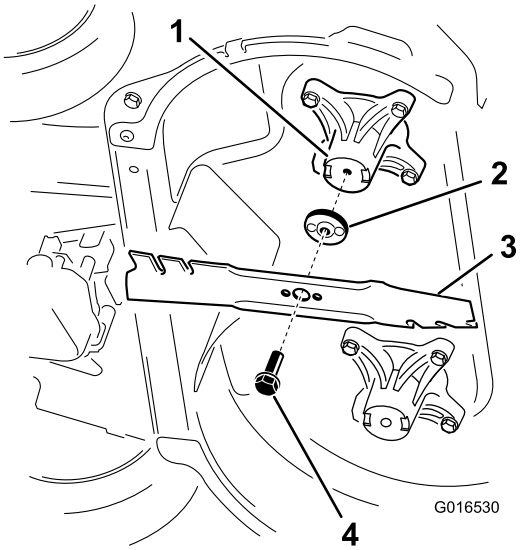


g016530

**Figure 37**

1. Spindle (2)
2. Blade driver (2)
3. Blade (2)
4. Blade bolt (2)

3. Inspect the pins on the blade drivers for wear and damage.

## Installing the Blades

**⚠ WARNING**

**Incorrectly installing the blades could damage the machine or cause an injury to you or bystanders.**

**Install the blades according to the instructions.**

1. Install the first blade so that it is horizontal, along with all mounting hardware as shown in Figure 37.

   **Note:** Tighten the bolt with your fingers.

   ***Important:*** **Position the curved ends of the blades to point toward the machine housing. Be sure to nest the raised areas on each blade driver with the recesses in the head of its corresponding spindle, and the pins on the other side of each blade driver with the holes in its corresponding blade.**

2. Steady each blade with a board and turn the blade bolt clockwise with a torque wrench as shown in Figure 38; torque each blade bolt to 82 N·m (60 ft-lb).

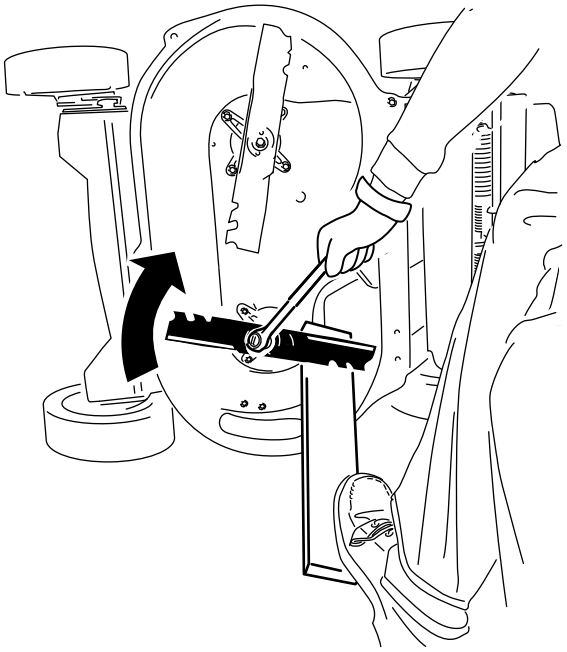

g232801

**Figure 38**

3. Rotate the installed blade 1/4 turn until it is vertical, and install the other blade in the same manner as the first (refer to step 1).

   **Note:** The blades should be perpendicular, forming an inverted “T” as shown in Figure 39.

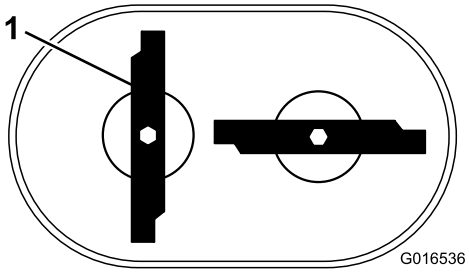


g016536

**Figure 39**

1. Blade (2)

4. Tighten the second blade; refer to step 2.
5. Rotate the blades by hand a full 360° turn to ensure that they do not touch.

   **Note:** If the blades touch each other, they are not mounted correctly. Repeat steps 1 through 3 until the blades no longer touch each other.

# Changing the Blade-Drive Belt

Change the blade-drive belt as needed.

1. Shut off the engine and wait for all moving parts to stop.
2. Disconnect the wire from the spark plug.
3. Remove the belt cover (Figure 6) by removing the 4 bolts that hold it to the machine housing.

   **Note:** Save the bolts for installing the belt cover to the machine housing.

4. Remove any debris from under the belt cover.
5. Remove the BBC belt guard and the mounting hardware.

   **Note:** Save the BBC belt guard and hardware for installation later.

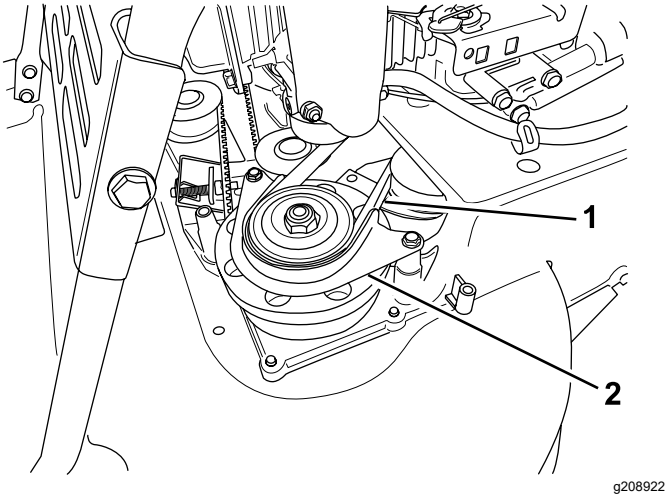


**Figure 40**

1. BBC belt
2. BBC belt guard

6. Remove the BBC belt from the front, left pulley.
7. Loosen the adjusting bolt (Figure 32).
8. Remove the fixed idler pulley and the hardware (Figure 41).

   **Note:** Save the idler pulley and hardware for installation later.

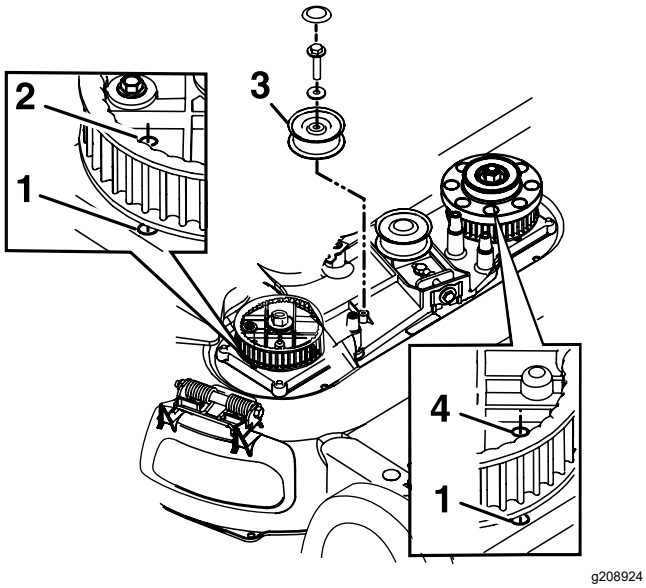


**Figure 41**

The BBC idler pulley is removed for clarity

1. Hole in the housing
2. Right sprocket hole
3. Fixed-idler pulley
4. Left sprocket hole

9. Remove the blade-drive belt.
10. Align the holes in the right and left sprockets with the holes in the housing as shown in Figure 41.

    **Note:** Hold the sprockets in place with a rod or a screwdriver.

11. When you have locked the sprockets in place, install the blade-drive belt and the fixed idler pulley.

    **Note:** Ensure that the teeth are engaged in the sprockets.

12. Tighten the belt tension to the recommended settings; refer to Servicing the Blade-Drive System (page 25).
13. Remove the rod or screwdriver from the sprockets.
14. Ensure that the blades under the housing are properly aligned; refer to Servicing the Blades (page 26).
15. Install the BBC belt and the BBC belt guard and hardware.
16. Install the belt cover using the 4 bolts that you removed in step 3.
17. Connect the wire to the spark plug.
18. Check the operation of the control bar and the blade-brake clutch.

# Changing the Blade-Brake-Clutch (BBC) Belt

**Service Interval:** Every 250 hours

1. Shut off the engine and wait for all moving parts to stop.
2. Disconnect the wire from the spark plug.
3. Remove the 4 bolts that hold the belt cover to the machine housing.

   **Note:** Save the bolts for installing the belt cover to the machine housing.

4. Remove the belt cover.
5. Remove any debris from under the belt cover.
6. Remove the transmission belt; refer to Removing the Transmission Belt (page 31).
7. Remove the BBC belt guard (Figure 42).

   **Note:** Save the mounting hardware for installing the BBC belt guard later.

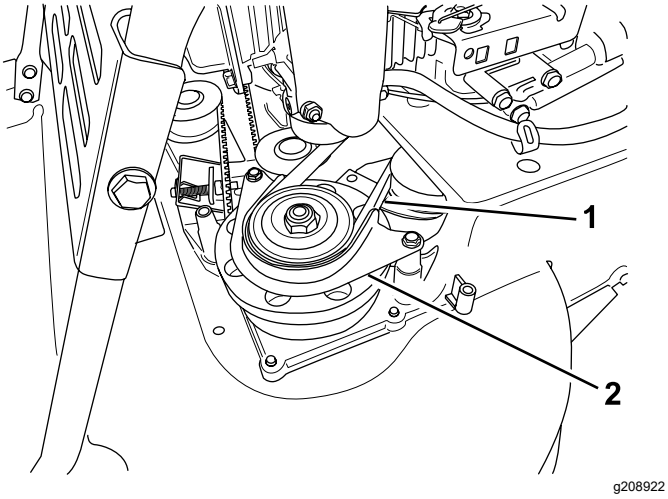


**Figure 42**

1. BBC belt
2. BBC belt guard

8. Remove the BBC belt from the brake-drum pulley and then remove the belt from the machine.

   **Note:** Hold one of the blades using a glove or a rag and turn the blade spindle to help remove the BBC belt.

9. To install a new BBC belt, reverse the steps above.
10. Adjust the BBC cable; refer to Adjusting the Blade-Brake Cable (page 30).

# Adjusting the Blade-Brake Cable

Adjust the blade-brake cable whenever you install a new cable or replace the BBC belt.

1. Shut off the engine and wait for all moving parts to stop.
2. Disconnect the wire from the spark plug.
3. Remove the belt cover (Figure 6) by removing the 4 bolts that hold it to the machine housing.

   **Note:** Save the bolts for installing the belt cover to the machine housing.

4. Remove any debris from under the belt cover.
5. Loosen the cable-clamp screw (Figure 43).

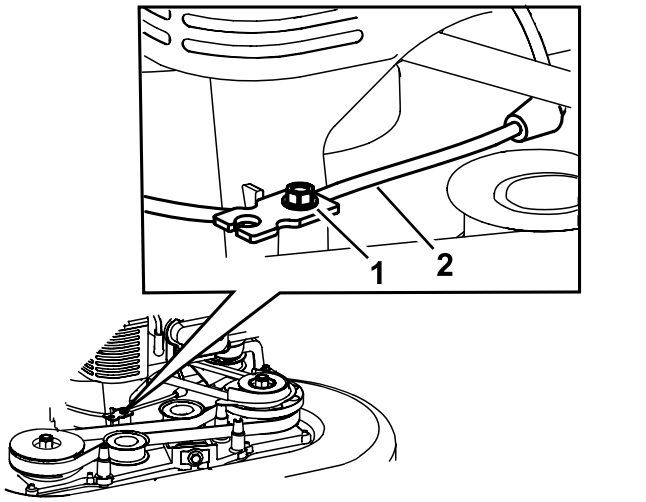


**Figure 43**

1. Cable-clamp screw
2. Blade-brake cable

6. Pull the cable jacket to remove slack (Figure 44).

   **Note:** Do not put tension on the spring.

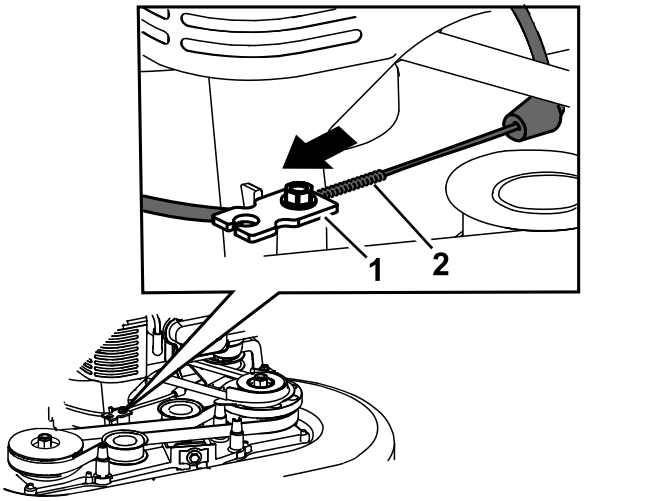


**Figure 44**

1. Cable clamp
2. Spring

7. Mark the brake cable (Figure 45), then adjust the jacket until there is approximately 11 mm (7/16 inch) of slack (Figure 46).

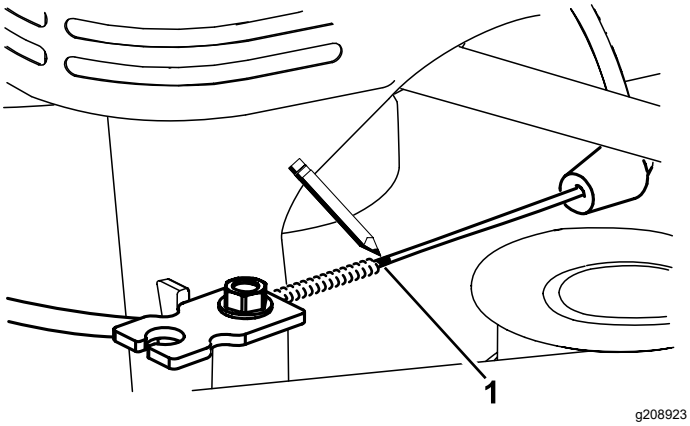


**Figure 45**

1. Mark the cable here

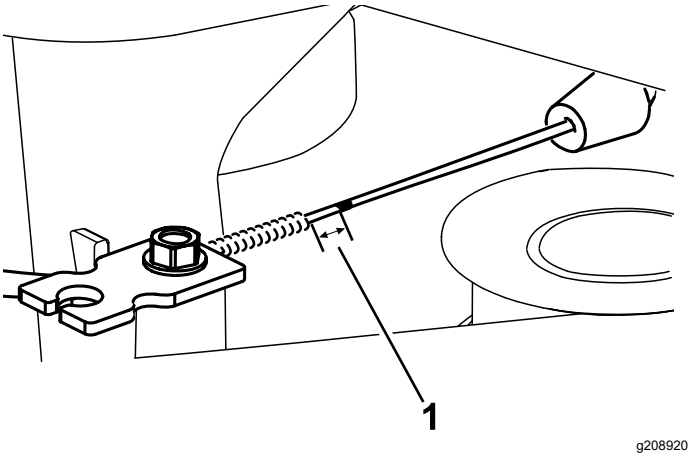


**Figure 46**

1. Slack—11 mm (7/16 inch)

8. Torque the cable-clamp screw to 11 to 14 N·m (99 to 121 in-lb) to lock the adjustment in place.
9. Install the belt cover with the 4 bolts that you removed in step 3.
10. Connect the wire to the spark plug.
11. Check the operation of the blade-brake clutch.

# Changing the Transmission Belt

**Service Interval:** Every 250 hours

## Removing the Transmission Belt

**Note:** Retain all hardware removed in this procedure, except the old transmission belt, for installation in Installing the Transmission Belt (page 32).

1. Shut off the engine and wait for all moving parts to stop.
2. Disconnect the wire from the spark plug.
3. Remove the 4 bolts that hold the belt cover to the machine housing.
4. Remove the belt cover.
5. Remove any debris from under the belt cover.
6. If the grass bag is on the machine, remove it. Refer to Removing the Grass Bag (page 17).
7. Raise and hold up the rear deflector.
8. Remove the rear-viewing window, located under the rear-discharge deflector, by removing the bolt holding it in place (Figure 47).

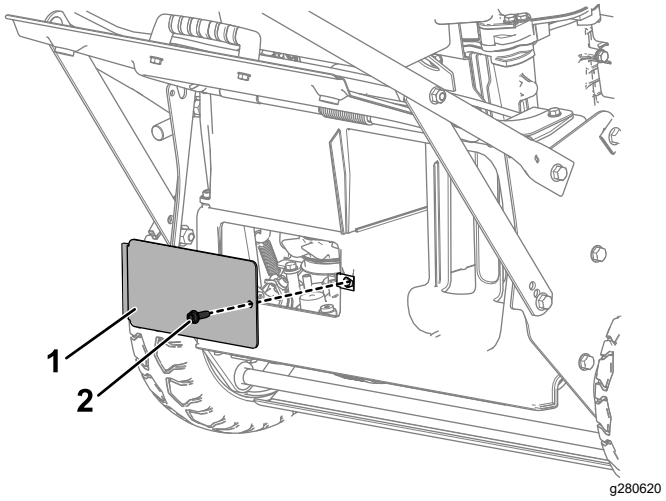


**Figure 47**

1. Rear-viewing window
2. Rear-viewing-window bolt

9. Remove the trailing shield by removing the 2 bolts holding it in place (Figure 48).

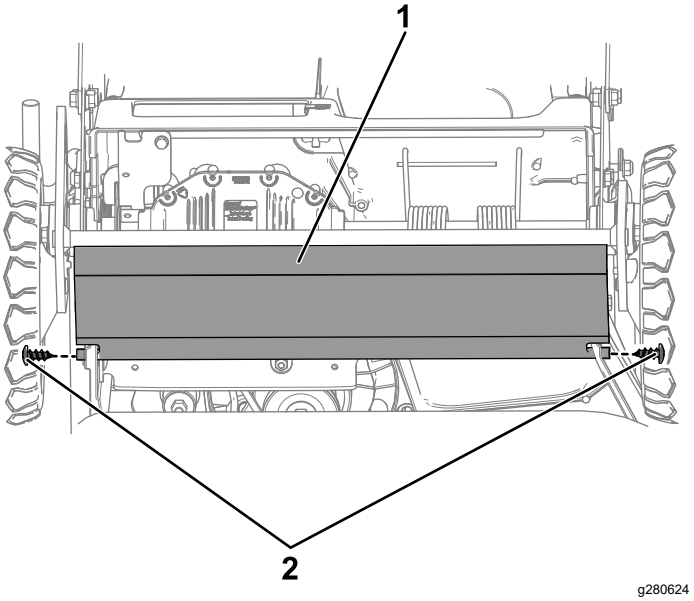


**Figure 48**

1. Trailing shield
2. Trailing-shield bolts

10. Rotate the idler pulley over the access hole on the transmission by using a socket wrench to turn the idler-pulley nut clockwise.

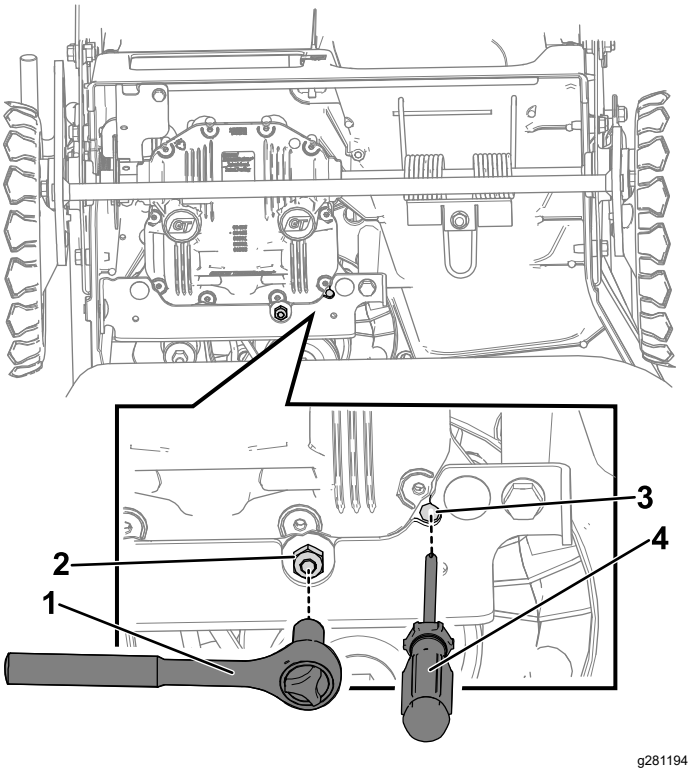


**Figure 49**

1. Socket wrench
2. Idler-pulley nut
3. Access hole
4. Screwdriver

11. While you are holding the idler pulley over the access hole on the transmission, insert a screwdriver through the access hole to catch a rib on the idler pulley.

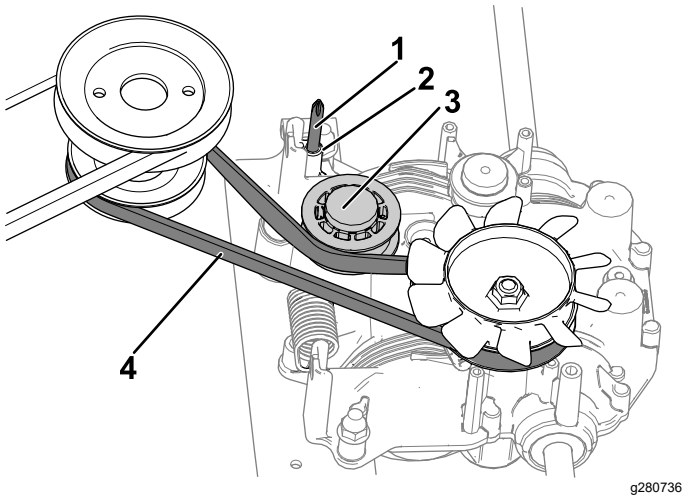


**Figure 50**

1. Screwdriver through access hole
2. Access hole
3. Idler pulley
4. Transmission belt

12. Use the screwdriver to hold the idler pulley out of the way until you are done installing the new transmission belt.
13. From the front of the machine, remove the belt from the engine pulley and then remove from the transmission pulley.

## Installing the Transmission Belt

1. While the idler pulley is pulled out of the way, install the new transmission belt placing the belt over the transmission pulley first and then over the engine pulley.
2. Remove the screwdriver from the access hole in the transmission to return the idler pulley to its tensioned position.
3. Use the rear-viewing window, located under the rear-discharge deflector, to ensure that the new transmission belt is positioned correctly.
4. Install the trailing shield using the 2 trailing-shield bolts removed in Step 9 of Removing the Transmission Belt (page 31).
5. Install the rear-viewing window, located under the rear-discharge deflector, using the corresponding bolt removed in 8 of Removing the Transmission Belt (page 31).

# Adjusting the Parking-Brake Cable

Whenever you install a new parking-brake cable or if the parking brake is out of adjustment, adjust the parking-brake cable.

1. Disengage the parking brake; refer to Disengaging the Parking Brake (page 15).
2. Turn the adjustment nut counterclockwise to loosen the cable adjustment (Figure 51).

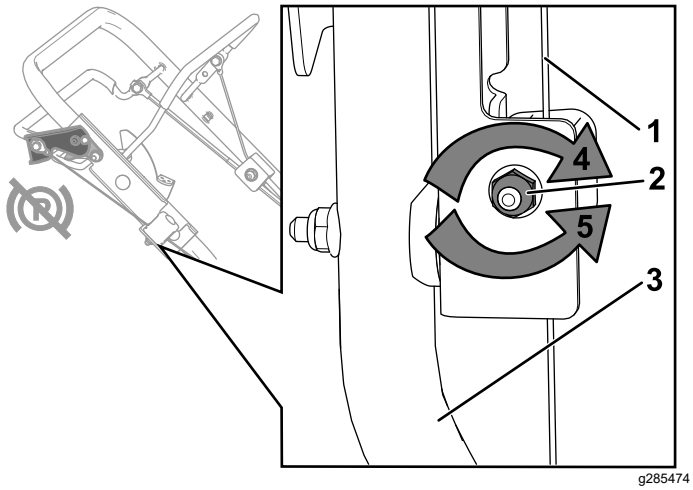


**Figure 51**

1. Parking-brake cable
2. Adjustment nut
3. Handle (right side)
4. Turn the nut clockwise to tighten the adjustment.
5. Turn the nut counterclockwise to loosen the adjustment.

3. Adjust the tension on the cable (Figure 51) by pulling or pushing the cable jacket and holding that position.

   **Note:** Pull the cable jacket toward the engine to increase tension (also increases brake clamp load); push the cable jacket away from the engine to decrease tension (also decreases brake clamp load).

   ***Important:*** **Adjust the cable jacket in small increments to avoid over tensioning. Over tensioning may cause the machine to not roll free even when the parking brake is disengaged. Correct tensioning allows the machine to roll free when the parking brake is disengaged and to hold position when the parking brake is engaged.**

4. Turn the adjustment nut clockwise to tighten the cable adjustment.

   **Note:** Tighten the nut firmly with a socket or wrench.

# Adjusting the Self-Propel Drive

## For Self-Propel-Drive Models Only

Whenever you install a new self-propel cable or if the self-propel drive is out of adjustment, adjust the self-propel drive.

1. Turn the adjustment nut counterclockwise to loosen the cable adjustment (Figure 52).

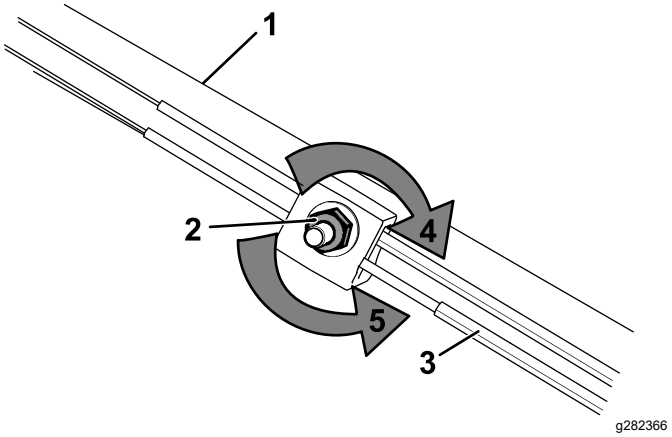


**Figure 52**

1. Handle (left side)
2. Adjustment nut
3. Self-propel-drive cable
4. Turn the nut clockwise to tighten the adjustment.
5. Turn the nut counterclockwise to loosen the adjustment.

2. Adjust the tension on the cable (Figure 52) by pulling it forward or pushing it back and holding that position.

   **Note:** Pull the cable toward the engine to increase the traction; push the cable away from the engine to decrease the traction.

   **Note:** Adjust the cable in small increments to avoid over adjusting it.

3. Turn the adjustment nut clockwise to tighten the cable adjustment.

   **Note:** Tighten the nut firmly with a socket or wrench.

# Storage

## Storage Safety

Always shut off the machine, wait for all moving parts to stop, and allow the machine to cool before adjusting, servicing, cleaning, or storing it.

## General Information

Store the machine in a cool, clean, dry place. Cover the machine to keep it clean and protected.

1. Perform the recommended annual maintenance procedures; refer to Maintenance (page 21).
2. Clean under the machine; refer to Cleaning under the Machine (page 19).
3. Remove chaff, dirt, and grime from the external parts of the engine, the shrouding, and the top of the machine.
4. Check the condition of the blades; refer to Servicing the Blades (page 26).
5. Service the air filter; refer to Servicing the Air Filter (page 22).
6. Tighten all nuts, bolts, and screws.
7. Touch up all rusted or chipped paint surfaces with paint available from an Authorized Service Dealer.

## Preparing the Fuel System

On the last refueling of the year, add fuel stabilizer to the fuel as directed by the engine manufacturer. Empty the fuel tank when mowing the last time before storing the machine.

1. Run the machine until the engine shuts off from running out of fuel.
2. Start the engine again.
3. Allow the engine to run until it shuts off. When you can no longer start the engine, it is sufficiently dry.

## Preparing the Engine

1. While the engine is still warm, change the engine oil and the oil filter; refer to Changing the Engine Oil (page 22) and Changing the Oil Filter (page 23).
2. Remove the spark plug.
3. Using an oil can, add about 30 ml (1 fl oz), of motor oil to the engine through the spark-plug hole.
4. Slowly pull the starter rope several times to distribute oil throughout the cylinder.
5. Install the spark plug but do not connect the wire to the spark plug. Secure the wire so that it does not come into contact with the spark plug.

## Removing the Machine from Storage

1. Check and tighten all fasteners.
2. Remove the spark plug and spin the engine rapidly using the starter to blow excess oil from the cylinder.
3. Inspect the spark plug and replace it if it is dirty, worn, or cracked; refer to the engine owner's manual.
4. Install the spark plug and tighten it to the recommended torque of 20 N·m (180 in-lb).
5. Perform any needed maintenance procedures; refer to Maintenance (page 21).
6. Check the engine-oil level; refer to Checking the Engine-Oil Level (page 10).
7. Fill the fuel tank with fresh fuel; refer to Filling the Fuel Tank (page 9).
8. Connect the wire to the spark plug.

# Troubleshooting

| Problem | Possible Cause | Corrective Action |
|---|---|---|
| The engine does not start. | 1. The fuel tank is empty or the fuel system contains stale fuel. | 1. Drain and/or fill the fuel tank with fresh fuel. If the problem persists, contact an Authorized Service Dealer. |
| | 2. The fuel-shutoff valve is closed. | 2. Open the fuel-shutoff valve. |
| | 3. The throttle lever is not in the correct position. | 3. Move the throttle lever to the CHOKE position. |
| | 4. There is dirt, water, or stale fuel in the fuel system. | 4. Contact an Authorized Service Dealer. |
| | 5. The wire is not connected to the spark plug. | 5. Connect the wire to the spark plug. |
| | 6. The spark plug is pitted, fouled, or the gap is incorrect. | 6. Check the spark plug and adjust the gap if necessary. Replace the spark plug if it is pitted, fouled, or cracked. |
| | 7. There is dirt in the fuel filter. | 7. Replace the fuel filter and clean the in-tank filter screen. |
| The engine starts hard or loses power. | 1. The air-filter element is dirty and is restricting the air flow. | 1. Clean the air-filter pre-cleaner and/or replace the paper filter. |
| | 2. The engine-oil level is low or the oil is dirty. | 2. Check the engine oil. Change the oil if it is dirty or add oil if it is low. |
| | 3. The fuel-tank vent hose is plugged. | 3. Clean or replace the fuel-tank-vent hose. |
| | 4. There is dirt in the fuel filter. | 4. Replace the fuel filter and clean the in-tank filter screen. |
| | 5. There is dirt, water, or stale fuel in the fuel system. | 5. Contact an Authorized Service Dealer. |
| | 6. The underside of the machine contains clippings and debris. | 6. Clean under the machine. |
| | 7. The spark plug is pitted, fouled, or the gap is incorrect. | 7. Check the spark plug and adjust the gap if necessary. Replace the spark plug if it is pitted, fouled, or cracked. |
| The engine runs rough. | 1. The wire is not securely connected to the spark plug. | 1. Connect the wire securely to the spark plug. |
| | 2. The spark plug is pitted, fouled, or the gap is incorrect. | 2. Check the spark plug and adjust the gap if necessary. Replace the spark plug if it is pitted, fouled, or cracked. |
| | 3. The throttle lever is not in the FAST position. | 3. Move the throttle lever to the FAST position. |
| | 4. The air-filter element is dirty and is restricting the air flow. | 4. Clean the air-filter pre-filter and/or replace the paper filter. |
| | 5. There is dirt in the fuel filter. | 5. Replace the fuel filter and clean the in-tank filter screen. |
| The machine or engine vibrates excessively. | 1. A blade is bent or is out of balance. | 1. Balance the blade(s). If a blade is bent, replace it. |
| | 2. A blade-mounting bolt is loose. | 2. Tighten the blade-mounting bolts. |
| | 3. The underside of the machine housing contains clippings and debris. | 3. Clean under the machine. |
| | 4. The engine mounting bolts are loose. | 4. Tighten the engine mounting bolts. |
| | 5. The engine pulley, idler pulley, or blade pulley are loose. | 5. Tighten the loose pulley. |
| | 6. The engine pulley is damaged. | 6. Contact an Authorized Service Dealer. |
| | 7. The blade spindle is bent. | 7. Contact an Authorized Service Dealer. |
| | 8. The belt is damaged. | 8. Replace the belt. |

| Problem | Possible Cause | Corrective Action |
|---|---|---|
| There is an uneven cutting pattern. | 1. All 4 wheels are not at the same height.<br>2. The blades are dull.<br>3. You are mowing in the same pattern repeatedly.<br>4. The underside of the machine contains clippings and debris.<br>5. The blade spindle is bent. | 1. Place all 4 wheels at the same height.<br>2. Sharpen and balance the blades.<br>3. Change the mowing pattern.<br>4. Clean under the machine.<br>5. Contact an Authorized Service Dealer. |
| The discharge chute gets plugged up. | 1. The throttle lever is not in the Fast position.<br>2. The cutting height is too low.<br>3. You are mowing too fast.<br>4. The grass is wet.<br>5. The underside of the machine contains clippings and debris. | 1. Move the throttle lever to the FAST position.<br>2. Raise the cutting height; if necessary, mow a second time at a lower cutting height.<br>3. Slow down.<br>4. Allow the grass to dry before mowing.<br>5. Clean under the machine. |
| The machine does not self-propel. | 1. The self-propel-drive cable is out of adjustment or is damaged.<br>2. There is debris in the belt area.<br>3. The belt is damaged. | 1. Adjust the self-propel-drive cable; replace the cable if necessary.<br>2. Clean the debris from the belt area.<br>3. Replace the belt. |
| The blades do not rotate or they slip. | 1. The BBC belt or the timing belt is worn, loose, or broken.<br>2. The BBC belt is off the pulley.<br>3. The BBC cable is worn, loose, or broken. | 1. Adjust the BBC cable; adjust the timing belt tension; replace them if necessary.<br>2. Check the belt for damage and contact an Authorized Service Dealer if necessary.<br>3. Adjust the BBC cable; replace it if necessary. |
| The blades contact each other. | 1. The blades are installed or aligned incorrectly.<br>2. The blade adapters are worn, loosen, or broken.<br>3. The timing belt or worn, loose, or broken.<br>4. The timing sprockets or idler pulley is worn, loose, or broken. | 1. Install the blades properly.<br>2. Replace the blade adapters.<br>3. Contact an Authorized Service Dealer.<br>4. Contact an Authorized Service Dealer. |

# Notes:

# Notes:

# California Proposition 65 Warning Information

## What is this warning?

You may see a product for sale that has a warning label like the following:

**WARNING:** Cancer and Reproductive Harm—www.p65Warnings.ca.gov.

## What is Prop 65?

Prop 65 applies to any company operating in California, selling products in California, or manufacturing products that may be sold in or brought into California. It mandates that the Governor of California maintain and publish a list of chemicals known to cause cancer, birth defects, and/or other reproductive harm. The list, which is updated annually, includes hundreds of chemicals found in many everyday items. The purpose of Prop 65 is to inform the public about exposure to these chemicals.

Prop 65 does not ban the sale of products containing these chemicals but instead requires warnings on any product, product packaging, or literature with the product. Moreover, a Prop 65 warning does not mean that a product is in violation of any product safety standards or requirements. In fact, the California government has clarified that a Prop 65 warning "is not the same as a regulatory decision that a product is 'safe' or 'unsafe.'" Many of these chemicals have been used in everyday products for years without documented harm. For more information, go to https://oag.ca.gov/prop65/faqs-view-all.

A Prop 65 warning means that a company has either (1) evaluated the exposure and has concluded that it exceeds the "no significant risk level"; or (2) has chosen to provide a warning based on its understanding about the presence of a listed chemical without attempting to evaluate the exposure.

## Does this law apply everywhere?

Prop 65 warnings are required under California law only. These warnings are seen throughout California in a wide range of settings, including but not limited to restaurants, grocery stores, hotels, schools, and hospitals, and on a wide variety of products. Additionally, some online and mail order retailers provide Prop 65 warnings on their websites or in catalogs.

## How do the California warnings compare to federal limits?

Prop 65 standards are often more stringent than federal and international standards. There are various substances that require a Prop 65 warning at levels that are far lower than federal action limits. For example, the Prop 65 standard for warnings for lead is 0.5 µg/day, which is well below the federal and international standards.

## Why don't all similar products carry the warning?

- Products sold in California require Prop 65 labelling while similar products sold elsewhere do not.
- A company involved in a Prop 65 lawsuit reaching a settlement may be required to use Prop 65 warnings for its products, but other companies making similar products may have no such requirement.
- The enforcement of Prop 65 is inconsistent.
- Companies may elect not to provide warnings because they conclude that they are not required to do so under Prop 65; a lack of warnings for a product does not mean that the product is free of listed chemicals at similar levels.

## Why does Toro include this warning?

Toro has chosen to provide consumers with as much information as possible so that they can make informed decisions about the products they buy and use. Toro provides warnings in certain cases based on its knowledge of the presence of one or more listed chemicals without evaluating the level of exposure, as not all the listed chemicals provide exposure limit requirements. While the exposure from Toro products may be negligible or well within the "no significant risk" range, out of an abundance of caution, Toro has elected to provide the Prop 65 warnings. Moreover, if Toro does not provide these warnings, it could be sued by the State of California or by private parties seeking to enforce Prop 65 and subject to substantial penalties.

TORO®

Count on it.