Form No. 3326-380

TORO®

CCR™ Powerlite® 325

Snowthrower

Model No. 38173—220000001 and Up

Model No. 38183—220000001 and Up

Operator's Manual

CE

International English (GB)

This spark ignition system complies with Canadian ICES-002.

Ce système d'allumage par étincelle de véhicule est conforme à la norme NMB-002 du Canada.

The enclosed Engine Owner's Manual is supplied for information regarding The U.S. Environmental Protection Agency (EPA) and the California Emission Control Regulation of emission systems, maintenance and warranty.

Keep this engine Owner's Manual with your unit. Should this engine Owner's Manual become damaged or illegible, replace immediately. Replacements may be ordered through the engine manufacturer.

Contents

	Page
Introduction	2
Safety	3
Safe Operating Practices	3
Toro Snowthrower Safety	4
Sound Pressure Level	4
Sound Power Level	4
Vibration Level	4
Safety and Instruction Decals	5
Assembly	7
Loose Parts	7
Installing the Handle	8
Installing the Discharge Chute	8
Installing the Control Cable	8
Before Operation	9
Mixing Gasoline and Oil	9
Filling the Fuel Tank	11
Reviewing the Maintenance Schedule	11
Operation	11
Operating Controls	11
Starting the Engine	11
Stopping the Engine	12
Adjusting the Discharge Chute	12
Snowthrowing Tips	12
Maintenance	13
Recommended Maintenance Schedule	13
Adjusting the Control Cable	13
Replacing the Scraper	14
Replacing the Rotor Blades	14
Replacing the Drive Belt	15
Replacing the Spark Plug	16
Emptying the Fuel Tank	17
Storage	17
Preparing the Fuel System	17
Preparing the Engine	17
Preparing the Snowthrower	18
Folding and Unfolding the Handle	18
Troubleshooting	19

Introduction

Read this manual carefully to learn how to operate and maintain your product properly. The information in this manual can help you and others avoid injury and product damage. Although Toro designs and produces safe products, you are responsible for operating the product properly and safely.

Whenever you need service, genuine Toro parts, or additional information, contact an Authorized Service Dealer or Toro Customer Service and have the model and serial numbers of your product ready. Figure 1 illustrates the location of the model and serial numbers on the product.

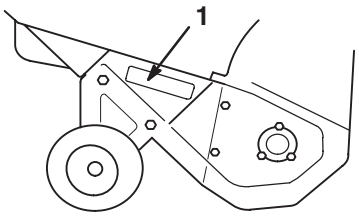

Figure 1

1. Location of the model and serial numbers

Write the product model and serial numbers in the space below:

Model No. _____

Serial No. _____

This manual identifies potential hazards and has special safety messages that help you and others avoid personal injury and even death. ***Danger***, ***Warning***, and ***Caution*** are signal words used to identify the level of hazard. However, regardless of the hazard, be extremely careful.

Danger signals an extreme hazard that *will* cause serious injury or death if you do not follow the recommended precautions.

Warning signals a hazard that *may* cause serious injury or death if you do not follow the recommended precautions.

Caution signals a hazard that may cause minor or moderate injury if you do not follow the recommended precautions.

© 2001 by The Toro Company
8111 Lyndale Avenue South
Bloomington, MN 55420-1196

All Rights Reserved

Printed in the USA

This manual uses two other words to highlight information. **Important** calls attention to special mechanical information and **Note:** emphasizes general information worthy of special attention.

Safety

To ensure maximum safety and best performance, and to gain knowledge of the product, it is essential that you and any other operator of the snowthrower read and understand the contents of this manual before the engine is ever started.

⚠ This is the safety alert symbol. It is used to alert you to potential personal injury hazards. Obey all safety messages that follow this symbol to avoid possible injury or death.

Improperly using or maintaining this snowthrower could result in injury or death. To reduce this potential, comply with the following safety instructions.

Safe Operating Practices

The following instructions have been adapted from the ANSI/OPEI B71.3–1995 standard and the ISO 8437:1989 standard. Information or terminology specific to Toro snowthrowers is enclosed in parenthesis.

Training

- Read the operator's manual carefully. Be thoroughly familiar with the controls and the proper use of the equipment. Know how to stop the unit and disengage the controls quickly.
- Never allow children to operate the snowthrower. Never allow adults to operate the snowthrower without proper instruction.
- Keep the area of operation clear of all persons (particularly small children) and pets.
- Exercise caution to avoid slipping or falling.

Preparation

- Thoroughly inspect the area where you will use the snowthrower. Remove all doormats, sleds, boards, wires, and other foreign objects.
- Release the control bar to disengage the rotor blades before starting the engine.
- Do not operate the snowthrower without wearing adequate winter garments. Wear footwear that will improve your footing on slippery surfaces.
- Handle fuel with care; it is highly flammable.
  - Use an approved fuel container.
  - Never add fuel to a running or hot engine.
  - Fill the fuel tank outdoors with extreme care. Never fill the fuel tank indoors.
  - Replace the fuel tank cap securely and wipe up any spilled fuel.
- Use only the power cord supplied with the snowthrower and a receptacle appropriate for use with the power cord for electric-start motors.
- Never attempt to make any adjustments while the engine is running, except where specifically recommended by Toro.
- Let the engine and the snowthrower adjust to the outdoor temperature before starting to clear snow.
- Operating any powered machine can result in foreign objects being thrown into the eyes. Always wear safety glasses or eye shields while operating, adjusting, or repairing the snowthrower.

Operation

- Do not put hands or feet near or under rotating parts. Keep clear of the discharge opening at all times.
- Exercise extreme caution when crossing gravel drives, walks, or roads. Stay alert for hidden hazards or traffic.
- Do not attempt to clear snow from a crushed-rock or gravel surface. This product is intended for use only on paved surfaces.
- After striking a foreign object, stop the engine, remove the ignition key, thoroughly inspect the snowthrower for any damage, and repair the damage before operating the snowthrower.
- If the unit should start to vibrate abnormally, stop the engine and check immediately for the cause. Vibration is generally a warning of trouble.
- Stop the engine whenever you leave the operating position, before unclogging the discharge chute, and when making any repairs, adjustments, or inspections.
- When cleaning, repairing, or inspecting, make certain that the rotor blades and all moving parts have stopped.
- Do not run the engine indoors, except when starting it and for moving the snowthrower in or out of the building. Open the outside doors; exhaust fumes are dangerous.
- Do not clear snow across the face of slopes. Exercise extreme caution when changing direction on slopes. Do not attempt to clear steep slopes.
- Never operate the snowthrower without proper guards, plates, or other safety protective devices in place.

- Never operate the snowthrower near glass enclosures, automobiles, window wells, and drop-offs without properly adjusting the snow discharge angle. Keep children and pets away.
- Do not overload the machine capacity by attempting to clear snow at too fast a rate.
- Look behind and use care when backing up with the snowthrower.
- Never direct the discharge at bystanders or allow anyone in front of the unit.
- Never operate the snowthrower without good visibility or light. Always be sure of your footing, and keep a firm hold on the handle. Walk; never run.

Maintenance and Storage

- Check all fasteners at frequent intervals for proper tightness to be sure that the equipment is in safe working condition.
- Never store the machine with fuel in the fuel tank inside a building where ignition sources are present, such as hot water and space heaters and clothes dryers. Allow the engine to cool before storing in any enclosure.
- Always refer to this operator's manual for important details if the snowthrower is to be stored for an extended period.
- Maintain or replace safety and instruction labels when necessary.

Toro Snowthrower Safety

The following list contains safety information specific to Toro products or other safety information that you must know.

- *Rotating rotor blades can injure fingers or hands.* Stay behind the handles and away from the discharge opening while operating the snowthrower. *Keep your face, hands, feet, and any other part of your body or clothing away from moving or rotating parts.*
- Before adjusting, cleaning, repairing, and inspecting the snowthrower, and before unclogging the discharge chute, *stop the engine, remove the key, and wait for all moving parts to stop*.
- Use a stick, *not your hands*, to remove obstructions from the discharge chute.
- *Before* leaving the operating position, stop the engine, remove the key, and wait for all moving parts to stop.
- Do not wear loose-fitting clothing that could get caught in moving parts.
- If a shield, safety device, or decal is damaged, illegible, or lost, repair or replace it before beginning operation. Also, tighten any loose fasteners.
- *Do not* smoke while handling gasoline.
- *Do not* use the snowthrower on a roof.
- Do not touch the engine while it is running or soon after it has stopped because the engine may be hot enough to cause a burn.
- Perform only those maintenance instructions described in this manual. Before performing any maintenance, service, or adjustment, stop the engine, remove the key. If major repairs are ever needed, contact your Authorized Service Dealer.
- Do not change the governor settings on the engine.
- When storing the snowthrower for more than 30 days, drain the fuel from the fuel tank to prevent a potential hazard. Store fuel in an approved fuel container. Remove the key from the ignition switch before storing the snowthrower.
- To ensure the best performance and safety, purchase only genuine Toro replacement parts and accessories.

Sound Pressure Level

This unit has a sound pressure at the operator's ear of 90 dB(A), based on measurements of identical machines per Directive 84/538/EEC.

Sound Power Level

This unit has a sound power level of 103 LwA, based on measurements of identical machines per Directive 84/538/EEC.

Vibration Level

This unit has a maximum hand-arm vibration level of 11.4 m/s^2, based on measurements of identical machines per EN 1033.

Safety and Instruction Decals

Safety decals and instructions are easily visible to the operator and are located near any area of potential danger. Replace any decal that is damaged or lost.

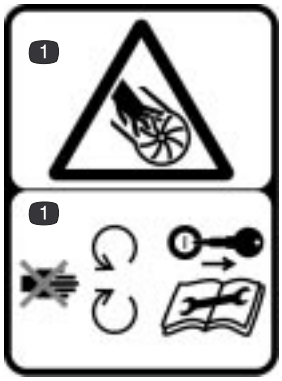

94-2560

1. Cutting/dismemberment in impeller hazard—stay away from moving parts, stop the engine, and remove the key before performing maintenance

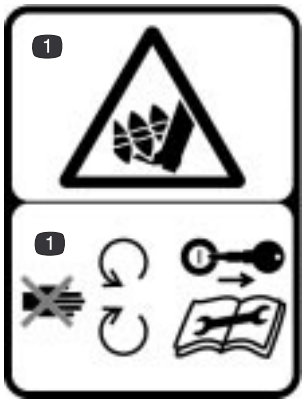

94-2562

1. Cutting/dismemberment in auger hazard—stay away from moving parts, stop the engine, and remove the key before performing maintenance

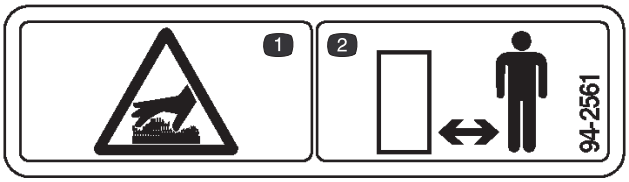

94-2561

1. Hot surface; do not touch
2. Stay a safe distance from the machine

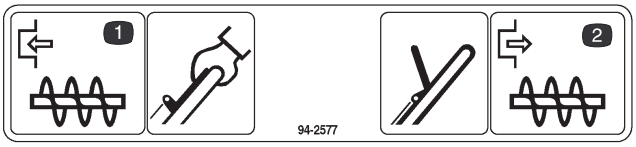

94-2577

1. Squeeze the control bar to engage the rotor blades
2. Release the control bar to release the rotor blades

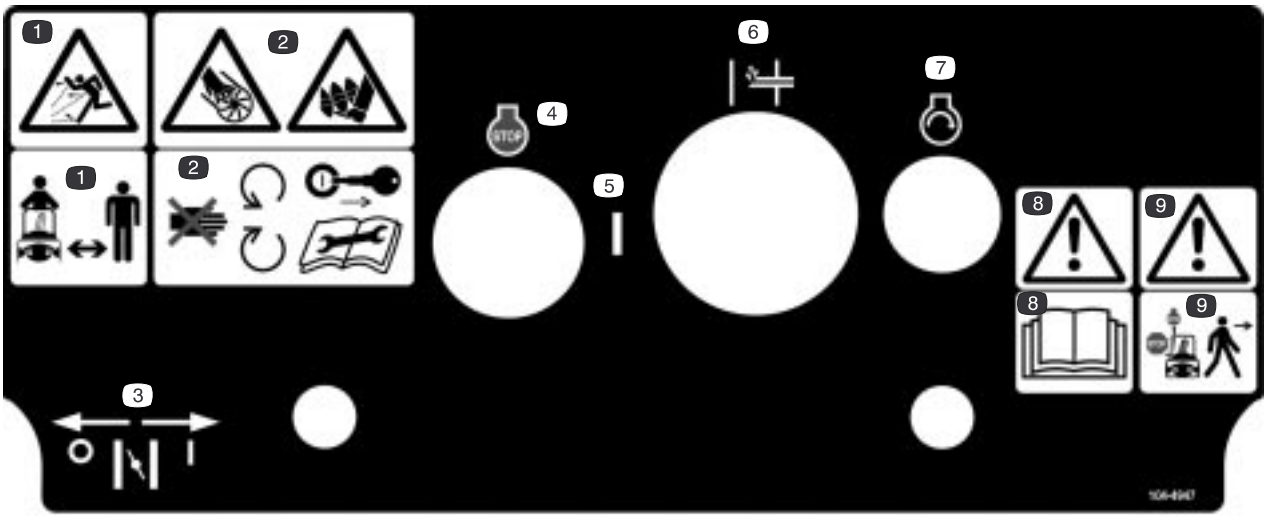

104-4947 (Recoil-start model only)

1. Thrown object hazard—keep bystanders away
2. Cutting/dismemberment in impeller and auger hazard—stay away from moving parts, stop the engine, and remove the key before performing maintenance
3. Choke
4. Ignition off
5. Ignition on
6. Primer
7. Starter
8. Warning—read the *Operator's Manual*
9. Warning—stop the engine before leaving the machine

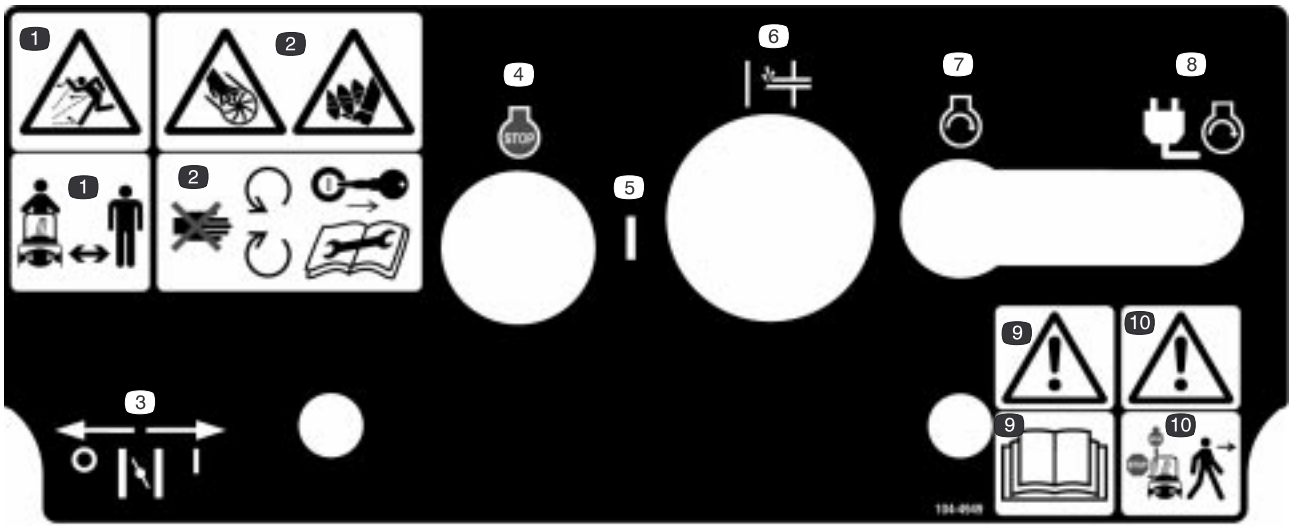

104-4949 (Electric-start model only)

1. Thrown object hazard—keep bystanders away
2. Cutting/dismemberment in impeller and auger hazard—stay away from moving parts, stop the engine, and remove the key before performing maintenance
3. Choke
4. Ignition off
5. Ignition on
6. Primer
7. Recoil Starter
8. Electric starter
9. Warning—read the *Operator's Manual*
10. Warning—stop the engine before leaving the machine



104-9740

Assembly

Note: Determine the left and right sides of the machine from the normal operating position.

Loose Parts

Description	Qty.	Use
Upper handle section	1	Installing the handle
Handle knobs	2	
Oval-head bolts	2	
Curved washers	2	
Locknuts	3	Installing the discharge chute
Washers	3	
Discharge chute	1	
Spring	1	Installing the control cable
Spring cover	1	
Cable adjuster	1	
Control cable	1	
Ignition key	1	Starting and stopping the engine

Installing the Handle

1. Position the ends of the upper handle section on the inside of the lower handle section and align the holes (Fig. 2).

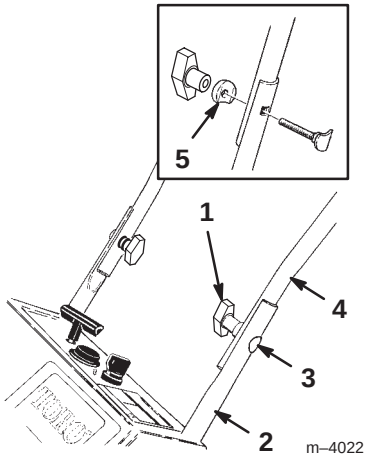

Figure 2

1. Handle knob (2)
2. Lower handle section
3. Oval-head bolt (2)
4. Upper handle section
5. Curved washer (2)

---

2. Insert the oval-head bolts into the aligned holes in the handle sections with the bolt heads on the outside of the handle (Fig. 2).

3. Install the curved washers and the handle knobs on the oval-head bolts and *tighten the handle knobs securely.*

Note: Ensure that the oval-head bolts and the curved washers are properly installed (See inset in Fig. 2).

Installing the Discharge Chute

1. Position the holes in the sides on the discharge chute over the hex bolts on the sides of the chute handle (Fig. 3).

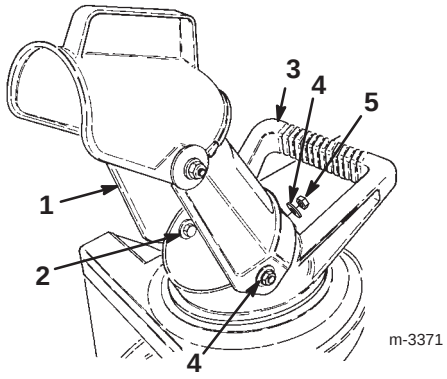

Figure 3

1. Discharge chute
2. Hex bolt (3)
3. Chute handle
4. Washer (3)
5. Locknut (3)

---

2. Secure the discharge chute onto the hex bolts with two washers and two locknuts (Fig. 3).

3. Hold the hex bolt heads with a wrench and tighten the locknuts securely.

4. Rotate the discharge chute to the upright position.

5. Install the locknut and the washer *tightly* onto the screw at the rear of the discharge chute (Fig. 3).

Installing the Control Cable

Important When you install the control cable to the upper handle, ensure that the cable is in the groove of the cable pulley on the lower left side of the snowthrower (Fig. 13).

1. Route the control cable through the loop on the left side of the snowthrower (Fig. 4).

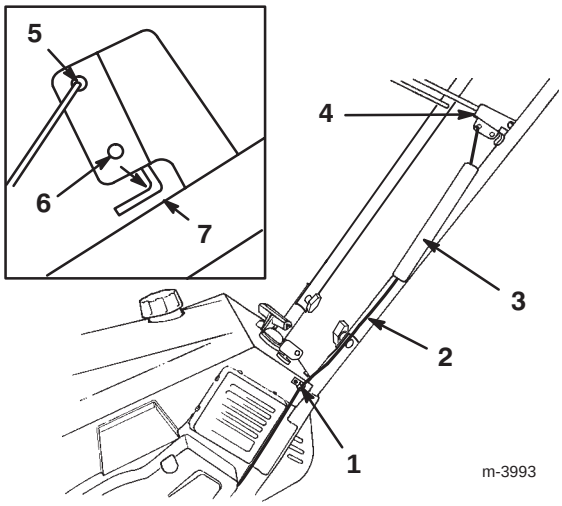

Figure 4

1. Loop
2. Control cable
3. Spring cover
4. Control bar bracket
5. Top hole
6. Bottom hole
7. 1/16 to 1/8 in. (2 to 3 mm)

2. Hook the spring into the round hole at the end of the cable adjuster (Fig. 5).

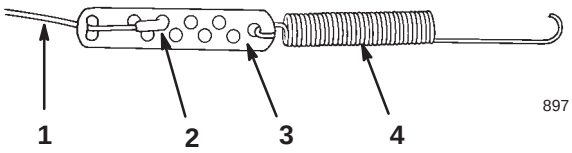

Figure 5

1. Cable
2. Z-fitting
3. Cable adjuster
4. Spring

3. Secure the end of the cable to the cable adjuster as illustrated in Figure 5.

4. Slide the spring cover over the spring and the cable adjuster and push the spring end through the hole at the end of the spring cover (Fig. 4).

5. Hook the spring into the top hole of the control bar bracket (Fig. 4).

6. Move the control bar back toward the handle to remove the slack in the cable.

7. Ensure that a 1/16- to 1/8-inch (2 to 3 mm) gap exists between the control bar and the handle (Refer to the inset in Fig. 4). To adjust this gap, refer to Adjusting the Control Cable on page 13.

Important The control cable must contain slack when you disengage the control bar.

Before Operation

Mixing Gasoline and Oil

Your Toro snowthrower is powered by a two-cycle engine that requires a 50:1 gasoline-to-oil mixture.

Use only clean, unleaded gasoline no more than 30 days old and with an octane rating of 87 or higher. Using unleaded gasoline reduces combustion chamber deposits and promotes longer spark plug life.

Engines certified to comply with U.S. EPA emission regulations for ULGE engines are certified to operate on a mixture of regular unleaded gasoline and oil, include the following emission control system(s): EM and TWC (if equipped), and do not include any user-adjustable features.

Important *Do not* use methanol, gasoline containing methanol, gasohol containing more than 10% ethanol, premium gasoline, or white gas. Using these fuels can damage the fuel system.

Important *Do not* use an automotive oil (such as SAE 30 or 10W30), a two-cycle oil that is not NMMA TCW-certified, or a fuel mixed at the wrong gasoline-to-oil ratio. This can cause engine damage not covered under the Toro warranty.

Danger

In certain conditions, gasoline is extremely flammable and highly explosive. A fire or explosion from gasoline can burn you and others and can damage property.

- **Fill the fuel tank outdoors, in an open area, and when the engine is cold. Wipe up any gasoline that spills.**
- **Do not fill the fuel tank completely full. Add gasoline to the fuel tank until the level is 1/4 to 1/2 in. (6 to 13 mm) below the bottom of the filler neck. This empty space in the tank allows the gasoline to expand.**
- **Never smoke when handling gasoline, and stay away from an open flame or where a spark may ignite the gasoline fumes.**
- **Store gasoline in an approved fuel container and keep it out of the reach of children.**
- **Never buy more than a 30-day supply of gasoline.**

Danger

When fueling, under certain circumstances, a static charge can develop, igniting the gasoline. A fire or explosion from gasoline can burn you and others and damage property.

- **Always place gasoline containers on the ground and away from your vehicle before filling.**
- **Do not fill gasoline containers inside a vehicle or on a truck or trailer bed because interior carpets or plastic truck bed liners may insulate the container and slow the loss of any static charge.**
- **When practical, remove gasoline-powered equipment from the truck or trailer and refuel the equipment with its wheels on the ground.**
- **If this is not possible, then refuel such equipment on a truck or trailer from a portable container, not from a gasoline dispenser nozzle.**
- **If you must use a gasoline dispenser nozzle, keep the nozzle in contact with the rim of the fuel tank or container opening at all times until fueling is complete.**

Note: Use a fuel stabilizer/conditioner for all Toro gasoline-powered products during operation and storage. A fuel stabilizer/conditioner cleans the engine during operation and prevents gum-like varnish deposits from forming in the engine during storage. A fuel stabilizer/conditioner works best when you mix it with fresh gasoline. If you use *Toro 50:1 2-Cycle Oil (Fuel Stabilizer Added)*, you do not need to add a fuel stabilizer/conditioner.

Important Do not use fuel additives except a fuel stabilizer during storage. Do not use fuel stabilizers with an alcohol base, such as ethanol, methanol, or isopropanol.

1. Pour a half gallon (1.9 liters) of fresh, unleaded gasoline into an approved fuel container.

Note: Do not mix gasoline and oil in the fuel tank. Oil at room temperature mixes easier and more thoroughly than cold oil. Oil below 32°F (0°C) requires additional mixing.

2. Add the full amount of *Toro 50:1 2-Cycle Oil (Fuel Stabilizer Added)* or an equivalent high grade, NMMA TCW-certified two-cycle oil to the gasoline according to the chart below:

50:1 Gasoline-to-Oil Ratio Mixing Chart	
Gasoline	Oil
1 gallon (4 liters)	2.6 ounces (80 ml)
2 gallons (8 liters)	5.2 ounces (160 ml)
5 gallons (20 liters)	13 ounces (400 ml)

Important For a new engine, use twice the normal amount of oil to mix with the very first gallon of gasoline. Thereafter, use the amount of oil indicated in the chart above.

3. Install the cap on the fuel container.
4. Shake the container to mix the gasoline and oil thoroughly.
5. Slowly remove the cap and add the remaining amount of gasoline.

Filling the Fuel Tank

Important Do not overfill the fuel tank. The gasoline-and-oil mixture must have room to expand.

1. Clean around the fuel tank cap (Fig. 6); do not allow snow or water to enter the fuel tank.

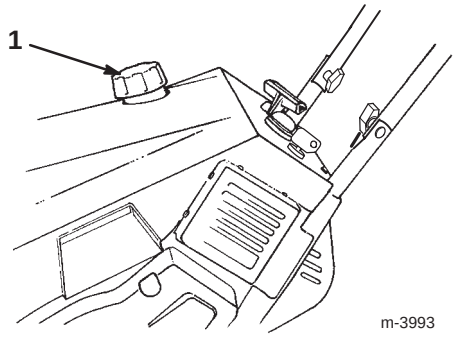

Figure 6

1. Fuel tank cap

2. Remove the fuel tank cap and fill the fuel tank with the gasoline-and-oil mixture to within 1/4 inch (6 mm) from the top of the tank. *Do not fill into the filler neck.*
3. Install the fuel tank cap securely and wipe up any spilled fuel.

Reviewing the Maintenance Schedule

Review the Recommended Maintenance Schedule on page 13. You may need to perform one or more additional procedures before or soon after you begin operating the snowthrower.

Operation

Note: Determine the left and right sides of the machine from the normal operating position.

Operating Controls

The snowthrower control panel contains a key switch, a primer, a recoil starter, and an electric-start button (electric-start model only). The choke lever is just below the lower left corner of the control panel (Fig. 7).

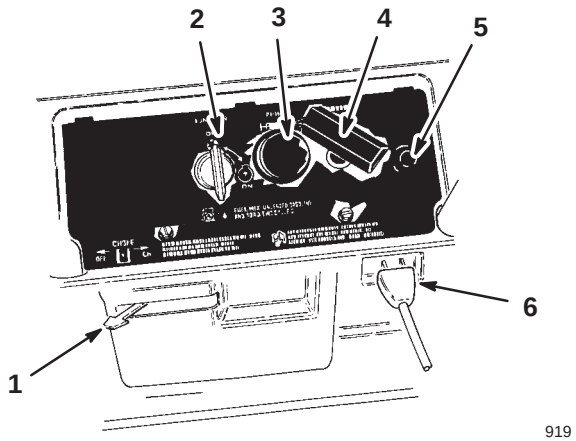

Figure 7

1. Choke lever
2. Key switch
3. Primer
4. Recoil starter
5. Electric-start button (electric-start model only)
6. Power cord connection (electric-start model only)

Starting the Engine

1. Turn the key to the *On* position.
2. Move the choke lever to the *On* (far right) position.
3. Cover the hole in the center of the primer with your thumb and slowly push the primer in twice, pausing a moment between pushes. In extremely cold temperatures, repeat this step if necessary.

Note: Take off your glove when you push in the primer so that air cannot escape from the primer hole.

Note: Do not use the choke or the primer when starting a warm engine.

4. Start the engine by doing the following:

   For a recoil starter: Hold the snowthrower with one hand and pull the recoil starter vigorously with the other hand.

   For an electric starter (electric-start model only):

   A. Connect the power cord to the snowthrower and to a standard household power outlet.

Caution

If you leave the snowthrower plugged into a power outlet, someone could inadvertently start the snowthrower and seriously injure people or damage property.

Unplug the power cord whenever you are not starting the snowthrower.

   B. Push the starter button.

Note: Run the electric starter no more than ten times at intervals of five seconds on, then five seconds off.

Important Running the electric starter extensively can overheat and damage the starter.

Note: If the engine does not start after this series of attempts, wait at least 40 minutes to allow the starter to cool before attempting to start it again.

Note: If the engine does not start after the second series of attempts, take the snowthrower to an Authorized Service Dealer for service.

C. When the engine starts, disconnect the power cord from the snowthrower and the outlet.

5. After warming up the engine, move the choke lever to the *Off* (far left) position.

Stopping the Engine

Turn the key to the *Off* position and wait for all moving parts to stop before leaving the operating position.

Adjusting the Discharge Chute

Move the chute handle left and right to adjust the direction of the snow stream (Fig. 8). The chute deflector handle on top of the discharge chute controls the height of the snow stream. *Do not overtighten the chute deflector mounting nuts.*

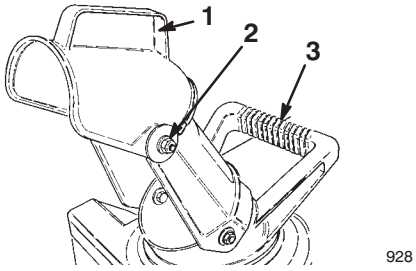

Figure 8

1. Chute deflector handle
2. Deflector mounting nut (2)
3. Chute handle

Snowthrowing Tips

Warning

The rotor blades can throw stones, toys and other foreign objects and cause serious personal injury to the operator or to bystanders.

- **Keep the area to be cleared free of all objects that the rotor blades could pick up and throw.**
- **Keep all children and pets away from the area of operation.**

- Remove the snow as soon as possible after it falls. This produces the best snow removal results.
- The snowthrower clears down to the ground and propels itself forward when you raise the handle. The snowthrower tilts *slightly* forward so that the rotor blades strike the ground. The wheels do not need to touch the ground to self-propel. The more you tilt the handle forward, the faster the snowthrower self-propels.
- Overlap each swath to ensure complete snow removal.
- Discharge the snow downwind whenever possible.
- Do not attempt to clear snow from a crushed-rock or gravel surface. This product is intended for use only on paved surfaces.
- In snowy and cold conditions, some controls and moving parts may freeze. *Do not use excessive force when trying to operate frozen controls.* If you have difficulty operating any control or part, start the engine and let it run for a few minutes.
- After clearing the snow, let the engine run for a few minutes to prevent moving parts from freezing. Shut off the engine, wait for all moving parts to stop, and remove all ice and snow from the snowthrower.
- With the engine off, pull the recoil starter handle several times to prevent the recoil starter from freezing up.

Maintenance

Note: Determine the left and right sides of the machine from the normal operating position.

Recommended Maintenance Schedule

Maintenance Service Interval	Maintenance Procedure
Initially	• Check the control cable both initially and after the first hour of operation; adjust it if necessary. Refer to Adjusting the Control Cable on page 13. • Check for loose fasteners and tighten them if necessary.
Annually	• Check the control cable and adjust it if necessary. Refer to Adjusting the Control Cable on page 13. • Check the scraper and replace it if necessary. Refer to Replacing the Scraper on page 14. • Inspect the rotor blades and replace it if necessary. Refer to Replacing the Rotor Blades on page 14. • Inspect the drive belt and replace if necessary. Refer to Replacing the Drive Belt on page 15. • Drain the fuel and run the engine until the fuel tank and the carburetor are dry. Refer to Emptying the Fuel Tank on page 17. • Check for loose fasteners and tighten them if necessary.
100 Hours	• Replace the spark plug. Refer to Replacing the Spark Plug on page 16.

Important Refer to your engine operator's manual for additional maintenance procedures.

Caution

If you leave the wire on the spark plug, someone could start the engine accidentally and seriously injure you or other bystanders.

Disconnect the wire from the spark plug before you do any maintenance. Set the wire aside so that it does not accidentally contact the spark plug.

Adjusting the Control Cable

Check the control cable for proper adjustment initially, after the first operating hour, and then annually thereafter.

1. Stop the engine and wait for all moving parts to stop.
2. Remove the key from the switch.
3. Move the control bar back toward the handle to remove the slack in the cable (Fig. 4).
4. Ensure that a 1/16 to 1/8 in. (2 to 3 mm) gap exists between the control bar and the handle (Refer to the inset in Fig. 4). To adjust the cable, go to step 5.

Note: The control cable must have slack when you disengage the control bar.

5. Unhook the spring end from the top hole in the control bar bracket (Fig. 4).
6. Slide the spring cover off the spring and the cable adjuster.
7. Unhook the Z-fitting from the cable adjuster and position the Z-fitting in the appropriate hole on the adjuster to obtain a proper gap of 1/16 to 1/8 in. (2 to 3 mm) between the control bar bracket and the handle (Fig. 5).
8. Install the spring cover over the cable adjuster and the spring.
9. Hook the spring into the top hole of the control bar bracket (Fig. 4).
10. Check the adjustment (refer to steps 3 and 4 above).
11. Install the key in the switch.

Note: After extensive use, the drive belt may wear and lose its proper belt tension. Improper belt tension causes belt slippage and decreases the performance under a heavy load. Belt slippage may occur after two or three seasons of normal usage (10 to 15 hours). If the drive belt slips (continuously squeals) under a heavy load, increase the belt tension by moving the Z-fitting to the next hole to the right on the cable adjuster (Fig. 5).

Note: Occasional belt slippage (squealing) may occur in extremely wet conditions due to moisture in the drive system. To remove moisture, start the rotor and operate it without a load for 30 seconds. Once you remove the moisture, the drive belt should not slip.

Replacing the Scraper

Before each season, inspect the scraper for wear. If the thickness from the top of the wear indicator groove to the bottom of the scraper is less than 1/16 inch (1.6 mm) or there is no longer a wear indicator groove, replace the scraper (Fig. 9).

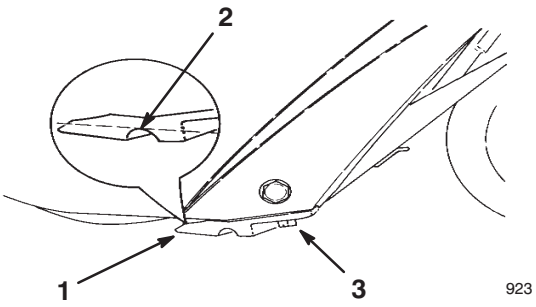

Figure 9

1. Scraper
2. Wear indicator groove
3. Screw (3)

---

1. Stop the engine and wait for all moving parts to stop.

2. Remove the key from the switch.

3. Disconnect the wire from the spark plug. Refer to steps 3 through 5 of Replacing the Spark Plug on page 16.

4. Remove the three screws that hold the old scraper in place (Fig. 9).

5. Remove the old scraper.

6. Secure the new scraper to the housing with the three screws.

7. Connect the wire to the spark plug.

8. Install the control panel.

9. Insert the key in the switch.

Replacing the Rotor Blades

Before each season, inspect the rotor blades for wear. When a rotor blade edge has worn to the wear indicator hole (Fig. 10), replace *both* rotor blades to ensure proper performance and to prevent damage to the underside of the snowthrower. The running time and the roughness of the driveway or the sidewalk determines the wear rate of the rotor blades.

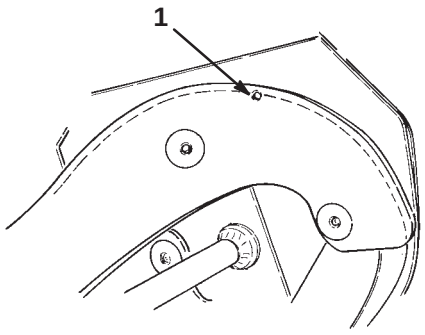

Figure 10

1. Wear indicator hole

Important Replace the scraper whenever you replace the rotor blades. This ensures proper snowthrower operation and performance. Refer to Replacing the Scraper on page 14.

Note: You need a T27 torx driver to complete this procedure.

1. Stop the engine and wait for all moving parts to stop.

2. Remove the key from the switch.

3. Disconnect the wire from the spark plug. Refer to steps 3 through 5 of Replacing the Spark Plug on page 16.

4. Remove four torx screws, two bolts, and six locknuts that secure the one of the rotor blades to the rotor shaft assembly (Fig. 11).

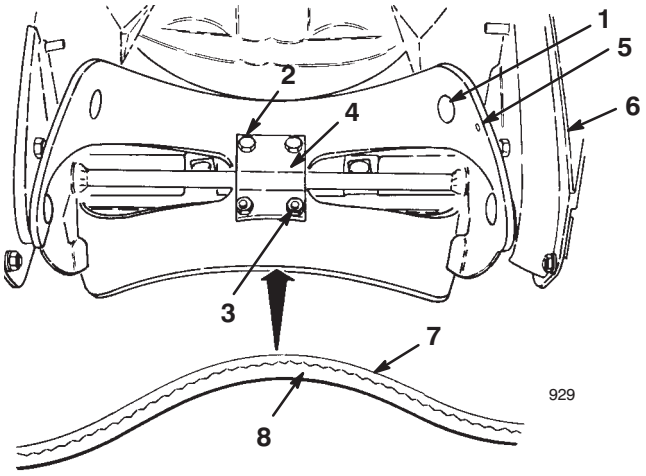

Figure 11

1. Torx screw (4 per rotor blade)
2. Bolt (2 per rotor blade)
3. Locknut (6 per rotor blade)
4. Blade support (2)
5. Wear indicator hole
6. Drive belt cover
7. Thin layer of rotor blade
8. Thick layer of rotor blade

5. Slide the old rotor blade out from between the blade supports (Fig. 11).

6. Examine a new rotor blade edge for the difference in layer thickness (Fig. 11).

Note: Install the rotor blades with the thick layer on the *inside* of the curve. (Fig. 11). If you do not install the blades properly, the blades will be out of balance and cause the snowthrower to “hop” or “bounce.”

7. Insert a new rotor blade between the blade supports.

8. Secure the center of the rotor blade to the blade supports with two bolts and two locknuts.

9. Position the screw heads on the thick layer side of the rotor blade (Fig. 11).

10. Curve the rotor blade and secure it with the remaining four torx screws and locknuts, positioning the screw heads on the thick layer side of the rotor blade (Fig. 11).

11. Tighten all screws and locknuts securely.

12. Repeat steps 4 through 11 above to replace the other rotor blade.

13. Connect the wire to the spark plug.

14. Install the control panel.

15. Insert the key in the switch.

Replacing the Drive Belt

Inspect the drive belt before each season, and replace it if it is worn or damaged.

1. Stop the engine and wait for all moving parts to stop.

2. Remove the key from the switch.

3. Disconnect the wire from the spark plug. Refer to steps 3 through 5 of Replacing the Spark Plug on page 16.

4. Remove two short self-tapping screws, one long self-tapping screw, one bolt, one washer, and one nut that secure the left side cover to the snowthrower frame (Fig. 12).

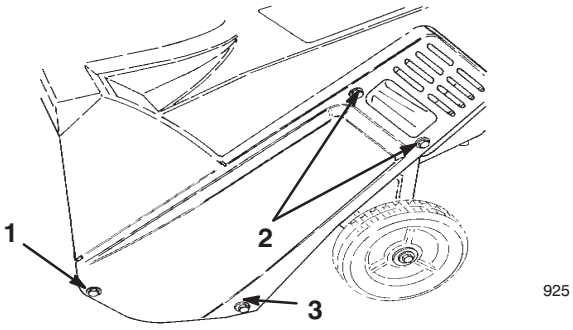

Figure 12

1. Bolt, nut, and washer
2. Short self-tapping screws
3. Long self-tapping screw

5. Remove the cover.

6. Loosen the four engine mounting nuts enough to allow the belt guide to rotate away from the drive pulley (Fig. 13).

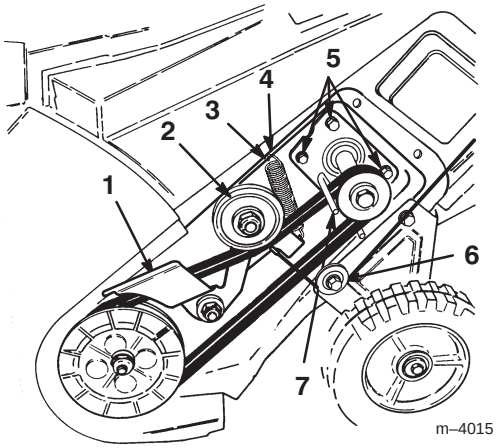

Figure 13

1. Brake arm
2. Idler pulley
3. Idler spring
4. Hole
5. Engine mounting nuts (3 of 4 shown)
6. Cable pulley
7. Belt guide

Important Removing the nuts will cause the engine to become loose.

7. Loosen the idler pivot nut (Fig. 14).

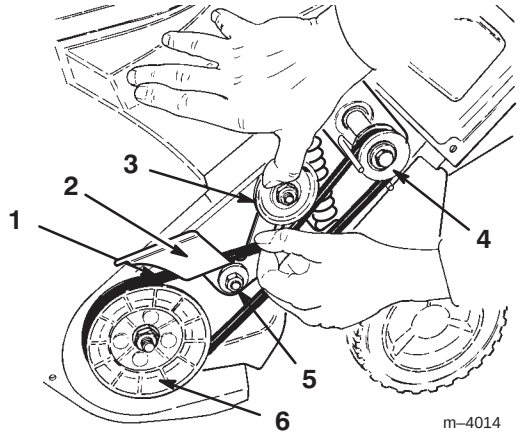

Figure 14

1. Drive belt
2. Brake arm
3. Idler pulley
4. Drive pulley
5. Idler pivot nut
6. Rotor pulley

8. Remove the old drive belt from the rotor pulley (Fig. 14).

9. Push down on the idler pulley to release the brake arm and pull the old drive belt out from behind the brake arm (Fig. 14).

10. Slide the old drive belt off the drive pulley (Fig. 14).

11. Loop the new drive belt around the drive pulley and behind the brake arm (Fig. 14).

12. While holding the new drive belt, slip it onto the rotor pulley and rotate the rotor with the other hand until it is completely on the rotor pulley (Fig. 14).

13. Ensure that the long end of the idler spring is hooked in the housing hole and the round end of the spring is hooked in the brake arm (Fig. 13).

14. Lift up the brake arm assembly, squeeze the new drive belt together, and route it under the idler pulley (Fig. 13).

15. Torque the engine mounting nuts and the idler pivot nut (Fig. 14) to 170 to 200 in-lbs (19.2 to 22.6 N·m).

Important Ensure that the drive cable is on the cable pulley before you install the left side cover (Fig. 13).

16. Install the left side cover and tighten fasteners securely, *but do not overtighten*.

17. Adjust the control cable if necessary. Refer to Adjusting the Control Cable on page 13.

18. Connect the wire to the spark plug.

19. Install the control panel.

20. Insert the key in the switch.

Replacing the Spark Plug

Use a *Champion CJ8Y* or equivalent spark plug. Install a new spark plug after every 100 operating hours.

1. Stop the engine and wait for all moving parts to stop.

2. Remove the key from the switch.

3. Remove the two screws that secure the control panel to the housing (Fig. 15).

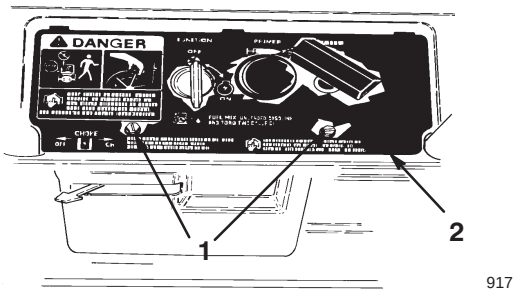

Figure 15

1. Screws
2. Control panel

4. Lift off the control panel and allow it to hang on the recoil rope.

5. Disconnect the wire from the spark plug (Fig. 16).

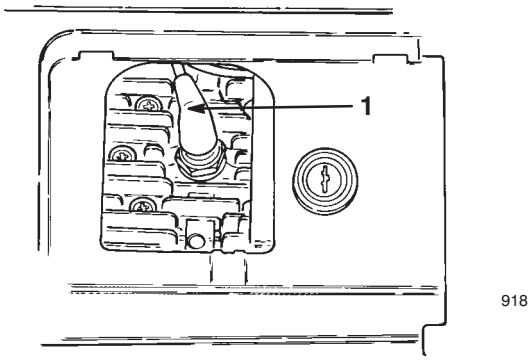

Figure 16

1. Spark-plug wire

6. Remove the spark plug.

7. Examine the spark plug and replace it if it is cracked, fouled, dirty, or if the electrodes are worn.

Important Do not clean the electrodes because grit could enter the cylinder and damage the engine.

8. Set the gap on the new spark plug at 0.030 inch (0.76 mm) as shown in Figure 17.

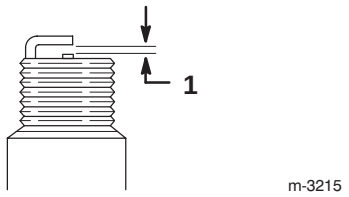

Figure 17

2. 0.030 in. (0.76 mm)

---

9. Install the spark plug by hand and then torque it to 15 ft-lb (20.4 N·m). If you do not have a torque wrench, tighten the spark plug firmly.

10. Connect the wire to the spark plug.

11. Install the control panel.

12. Insert the key in the switch.

Emptying the Fuel Tank

1. Stop the engine and wait for all moving parts to stop.

2. Remove the key from the switch.

3. Remove the fuel tank cap and use a hand pump to pump the fuel into an approved fuel container.

4. Start the engine and allow it to run until it stops. Repeat this step two more times to ensure that the fuel tank and the carburetor are empty.

Storage

Warning

Gasoline fumes are highly flammable, explosive, and dangerous if inhaled. If the product is stored in an area with an open flame, the gasoline fumes may ignite and cause an explosion.

Do not store the snowthrower in a house (living area), basement, or any other area where ignition sources may be present, such as hot water and space heaters, clothes dryers, furnaces, and other like appliances.

Preparing the Fuel System

1. Add a fuel stabilizer/conditioner to the fuel in the fuel tank as directed.

Note: If you use *Toro 50:1 2-Cycle Oil (Fuel Stabilizer Added)*, you do not need to add a fuel stabilizer/conditioner.

2. Run the engine for five minutes to distribute the conditioned fuel through the fuel system.

3. Stop the engine and allow it to cool.

4. Use a hand pump to pump the fuel from the fuel tank into an approved fuel container, or run the engine until it stops.

5. Start the engine and run it until it stops.

6. Choke or prime the engine, start it a third time, and run the engine until it will not start.

7. Dispose of unused fuel properly. Recycle it according to local codes, or use it in your automobile.

Note: Do not store stabilized fuel for more than 90 days.

Preparing the Engine

This procedure allows you to close both the intake and exhaust ports of the engine, preventing cylinder bore corrosion.

1. Slowly pull the recoil starter until you feel resistance due to compression pressure, then stop.

2. Release the starter tension gradually by allowing the rope to go back slowly to prevent the engine from reversing due to compression pressure.

Preparing the Snowthrower

1. Tighten all loose screws, bolts, and locknuts. Repair or replace any damaged parts.
2. Clean the snowthrower thoroughly.
3. Cover the snowthrower and store it in a clean, dry place out of the reach of children. Allow the engine to cool before storing it in any enclosure.

Important Store the snowthrower in its operating position and on its wheels or hang it on a wall by its handle. Storing the snowthrower on its front housing may cause hard starting.

Folding and Unfolding the Handle

Danger

Gasoline and its fumes are highly flammable, explosive, and dangerous if inhaled. If gasoline contacts a flame or is inhaled, serious personal injury could occur.

Always empty the snowthrower fuel tank before transporting the snowthrower in a closed car trunk or vehicle; refer to *Emptying the Fuel Tank* on page 17.

1. Remove the knob from the rear of the discharge chute (Fig. 3).
2. Fold the discharge chute down and install the knob tightly onto the bolt at the rear of the discharge chute handle (Fig. 18).

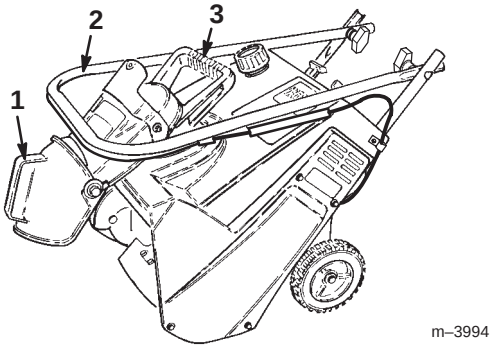

Figure 18

1. Discharge chute
2. Handle
3. Discharge chute handle

3. Loosen the knobs on the handle and fold the handle down over the snowthrower (Fig. 18).
4. Carry the snowthrower by its discharge chute handle (Fig. 18).

Note: After you unfold the handle and the discharge chute, tighten all the knobs and the locknut *securely.*

Troubleshooting

Problem	Possible Causes	Corrective Action
Electric starter does not turn (electric-start models only)	1. The power cord is disconnected at the outlet or the snowthrower. 2. The power cord is worn, corroded, or damaged. 3. The power outlet is not energized.	1. Connect the power cord to the outlet and/or the snowthrower. 2. Replace the power cord. 3. Have a qualified electrician energize the power outlet.
Engine does not start or starts hard	1. The key is not in the ignition or is in the *Off* position. 2. The choke is in the *Off* position and the primer has not been pressed. 3. The fuel tank is empty or the fuel system contains stale fuel. 4. The engine is flooded. 5. The spark-plug wire is loose or disconnected. 6. The spark plug is pitted, fouled, or the gap is incorrect. 7. The fuel cap vent is restricted.	1. Insert the key into the ignition and turn it to the *On* position. 2. Move the choke to the *On* position and press the primer two times. 3. Drain and fill the fuel tank with a fresh gasoline-and-oil mixture (not more than 30 days old). If the problem persists, contact an Authorized Service Dealer. 4. Move the choke to the *Off* position and pull the rope several times to clear out the rich fuel-and-air mixture from the engine. 5. Connect the wire to the spark plug. 6. Check the spark plug and adjust the gap if necessary. Replace the spark plug if it is pitted, fouled, or cracked. 7. Remove the vent restriction or replace the fuel cap.
Engine runs rough	1. The choke is in the *On* position. 2. The fuel system contains stale fuel. 3. The spark-plug wire is loose. 4. The spark plug is pitted, fouled, or the gap is incorrect.	1. Move the choke to the *Off* position. 2. Drain and fill the fuel tank with a fresh gasoline-and-oil mixture (not more than 30 days old). If the problem persists, contact an Authorized Service Dealer. 3. Connect the wire to the spark plug. 4. Check the spark plug and adjust the gap if necessary. Replace the spark plug if it is pitted, fouled, or cracked.
Engine runs, but the snowthrower discharges snow poorly or not at all	1. You are walking too fast or too slow.	1. Change your walking speed.

Problem	Possible Causes	Corrective Action
	2. You are trying to remove too much snow per swath.	2. Reduce the amount of snow removed per swath.
	3. You are trying to remove extremely heavy or wet snow.	3. Don't overload the snowthrower with extremely heavy or wet snow; reduce the amount of snow removed per swath.
	4. The discharge chute is plugged.	4. Stop the engine, wait for all moving parts to stop, and use a stick to remove the snow from the discharge chute.
	5. The control cable is improperly adjusted or broken (models with clutch only).	5. Adjust or replace the control cable.
	6. The drive belt is loose or is off the pulley.	6. Inspect the drive belt, and install or replace it.
	7. The drive belt is worn or broken.	7. Replace the drive belt.
	8. The rotor blades are worn.	8. Replace the rotor blades and the scraper.
Snowthrower does not properly clear snow off the surface	1. The snow on the surface to be cleared is compacted down.	1. Throw the snow off the surface before it becomes compacted.
	2. The front of the snowthrower is not down.	2. Lift up on the handle to hold down the front of the snowthrower.
	3. The scraper is excessively worn.	3. Replace the scraper.
	4. The rotor blades are excessively worn.	4. Replace the rotor blades and the scraper.
Snowthrower does not self-propel	1. The front of the snowthrower is not down.	1. Lift up on the handle to hold down the front of the snowthrower.
	2. The rotor blades are excessively worn.	2. Replace the rotor blades and the scraper.
	3. The snow is too deep or the surface is too slippery.	3. Push forward on the handle, but allow the snowthrower to work at its own pace.
Rotor blades do not stop properly	1. The control cable is improperly adjusted (models with clutch only).	1. Adjust the control cable.