Form No. 3437-136 Rev C

TORO®

Count on it.

Parts Catalog

Outcross® 9060 Series

Traction Unit

Model No. 07511AA—Serial No. 405800000 and Up

Register at www.Toro.com.
Original Instructions (EN)

CE

3437-136 C

Ordering Replacement Parts

To order replacement parts, please supply the part number, the quantity, and the description of each part desired.

Understanding Reference Numbers

Each identified part in an illustration has a reference number. The reference number for a part also appears in the parts list, along with other information about the part.

This catalog uses two special reference number formats, one to indicate parts in a service assembly and another to indicate the quantity of a given part in an illustration.

Service Assembly Reference Numbers

Parts in service assemblies have reference numbers in the form a:b. The a represents the reference number of the entire service assembly and the b represents a sequential number unique to each part within the service assembly.

For example, a wheel assembly might be identified by reference number 6, the tire by 6:1, the valve by 6:2, and the wheel by 6:3. When you order the assembly identified by reference number 6, you receive all parts identified by reference numbers 6:1,6:2, and 6:3. However, you may also order any part individually. Reference numbers of this type appear in illustration and in parts lists.

Reference Numbers Indicating Quantity

In an illustration, if a reference number indicates more than one part, the reference number has the form nX y. The n represents the quantity of the part, the X is the multiplication symbol, and the y represents the reference number.

For example, in an illustration, the reference number 2X 37 means that two of the parts identified by reference number 37 are indicated.

Contents

Rear Frame Assembly . . . 6
Rear Frame Decal and Bushing Assembly . . . 8
Front Axle Assembly . . . 10
Front Axle Axle Housing Assembly . . . 12
Front Axle Swivel Housings and Trunnions Assembly . . . 14
Front Axle Bevel Gear Set Assembly . . . 16
Front Axle Double U-Joint Assembly . . . 18
Front Axle Wheel Hub Assembly . . . 20
Front Axle Planetary Carrier Assembly . . . 22
Motor Assembly No. 131-5635 . . . 24
Hydraulic Cylinder Assembly No. 133-4863 . . . 26
Tie Rod Assembly No. 133-4760 . . . 28
Rear Axle Assembly . . . 30
Rear Axle Axle Housing Assembly . . . 32
Rear Axle Swivel Housings and Trunnions Assembly . . . 34
Rear Axle Bevel Gear Set Assembly . . . 36
Rear Axle Double U-Joint Assembly . . . 38
Rear Axle Wheel Hub Assembly . . . 40
Rear Axle Planetary Carrier Assembly . . . 42
Parking Brake Assembly No. 133-4850 . . . 44
Hydraulic Cylinder Assembly No. 133-4864 . . . 46
Standard Box Assembly . . . 48
Panel Assembly . . . 50
Steering Assembly . . . 52
Steering Valve Assembly No. 131-5626 . . . 54
Paddle Shift Assembly . . . 56
Pedal Assembly . . . 58
Dash and Console Control Assembly . . . 60
Dash Component Assembly . . . 62
Engine Assembly . . . 64
Exhaust and Bracket Assembly . . . 66
Screen and Support Assembly . . . 68
Radiator Assembly . . . 70
Engine Cooling and Hose Assembly . . . 72
Transmission, Gearbox and Gear Pump Assembly . . . 74
Hydraulic Tandem Pump Assembly No. 131-5625 . . . 76
Hydraulic Gear Pump Assembly No. 131-5632 . . . 78
Gearbox Assembly No. 138-4083 . . . 80
Transmission, Gearbox and Gear Pump Fitting Assembly . . . 82
Driveshaft and Gearbox Assembly . . . 84
Gearbox Assembly No. 133-4790 . . . 86
Drawbar Hitch and Upper Link Assembly . . . 88
Rear Lift Assembly . . . 90
Hydraulic Cylinder Assembly No. 133-7622 . . . 92
Lower Link Assembly . . . 94
LH Extendable Arm Assembly . . . 96
RH Extendable Arm Assembly . . . 98
Operator Platform Assembly . . . 100
Seat Mount Assembly . . . 102
Seat Suspension Assembly No. 130-2702 . . . 104
Premium Seat Assembly No. 138-3806 . . . 106
Floor Grips and Hydraulic Tube Assembly . . . 108
Manifold, Filter and Auxiliary Valve Assembly . . . 110
Hydraulic Valve Assembly No. 131-5637 . . . 112

© 2021—The Toro® Company

8111 Lyndale Avenue South
Bloomington, MN 55420

Contact us at www.Toro.com.
Printed in the USA.

All Rights Reserved

Contents (continued)

Manifold Assembly No. 131-5639 . . . 114
Hydraulic Tank Assembly . . . 116
Hydraulic Tank and Auxiliary Valve Fitting Assembly . . . 118
Hydraulic Hose and Tube Assembly . . . 120
Hydraulic Hose Assembly 1 . . . 122
Hydraulic Hose Assembly 2 . . . 124
Hydraulic Hose Assembly 3 . . . 126
Fuel Pump and Filter Assembly . . . 128
Fuel Tank and Line Assembly . . . 130
Hood Assembly . . . 132
Hood Assembly No. 138-4138 . . . 134
Air Intake Assembly . . . 136
Air Cleaner Assembly No. 99-5410 . . . 138
Screen Assembly . . . 140
Battery Assembly . . . 142
Engine Wire Harness Assembly . . . 144
Platform Wire Harness Assembly . . . 146
Frame Wire Harness Assembly . . . 148
Headlight Wire Harness Assembly . . . 150
Cylinder Block Assembly . . . 152
Gear Housing Assembly . . . 154
Flywheel Housing and Oil Sump Assembly . . . 156
Cylinder Head and Cover Assembly . . . 158
Suction Manifold Assembly . . . 160
Exhaust Manifold Assembly . . . 162
Diesel Particulate Filter Assembly . . . 164
Camshaft and Driving Gear Assembly . . . 166
Turbine Assembly . . . 168
Crankshaft and Piston Assembly . . . 170
Lubrication and Oil System Assembly . . . 172
Lubrication Oil Pipe Assembly . . . 174
Cooling Water System Assembly . . . 176
Fuel Supply Pump Assembly . . . 178
Fuel Injection Valve Assembly . . . 180
Fuel Pipe Assembly . . . 182
Starter Motor Assembly . . . 184
Generator Assembly . . . 186
Electronic Control Unit Assembly . . . 188
Electric Parts Assembly . . . 190
Miscellaneous Engine Parts . . . 192
Gasket Set . . . 194
Attachments and Accessories . . . 196

Rear Frame Assembly

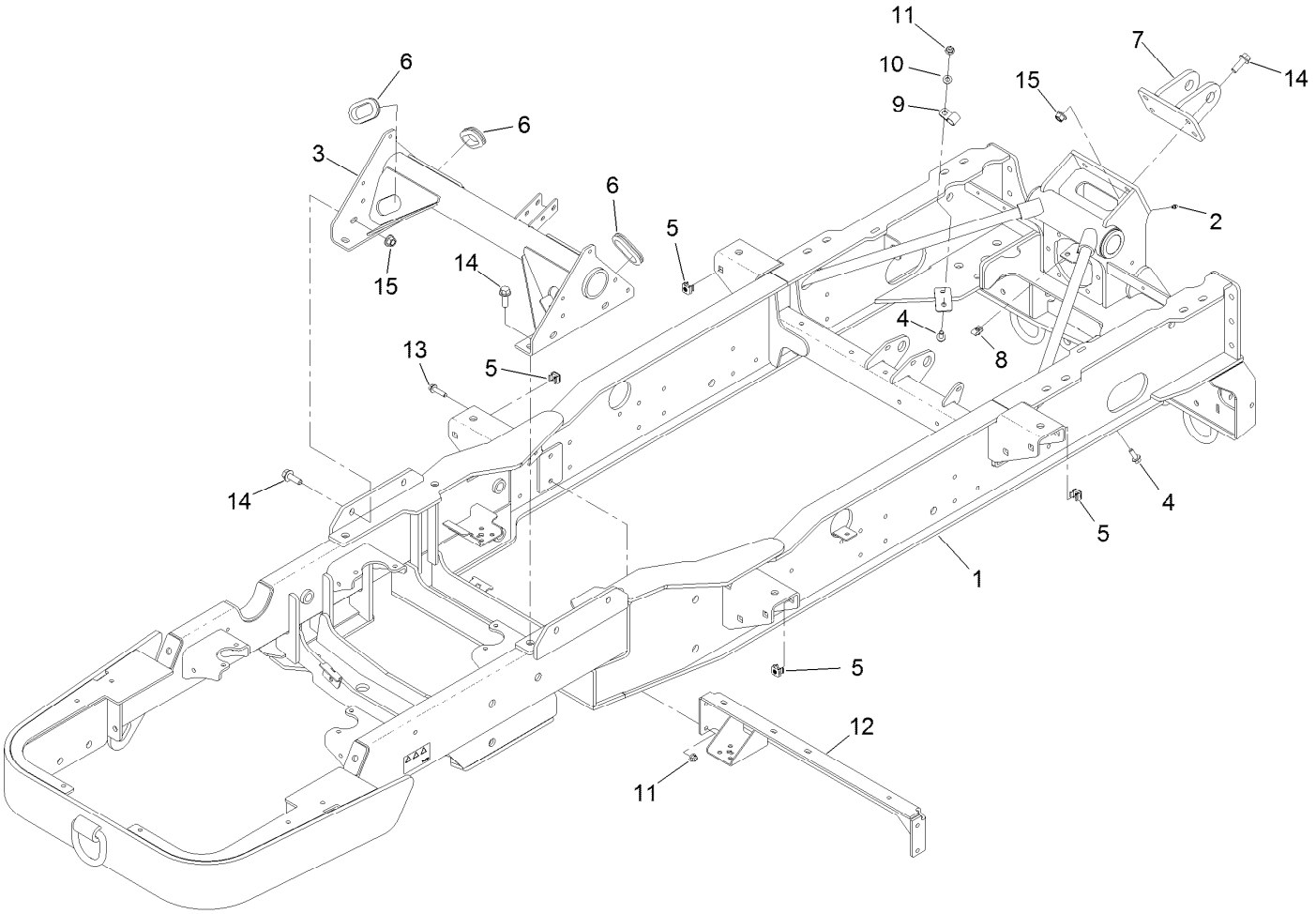

Rear Frame Assembly (continued)

Ref.	Part Number	Qty.	Description
1		1	Frame ASM ●
2	302-5	1	Fitting-Grease
3	136-5050-03	1	Support-Frame
4	3234-42	2	Screw-HHF
5	138-4106	8	Nut-Clip, Sq
6	126-0015	3	Grommet
7	131-5487-03	1	Attach-Link
8	94-2413	1	Nut-U
9	2412-81	2	Clamp-R
10	3256-24	2	Washer-Flat
11	104-8301	6	Nut-HF, NI
12	136-9960-01	1	Crossmember
13	114-4681	4	Screw-HHF
14	100-6116	12	Screw-HHF
15	99-5107	8	Nut-Lock

● Not serviced separately

Rear Frame Decal and Bushing Assembly

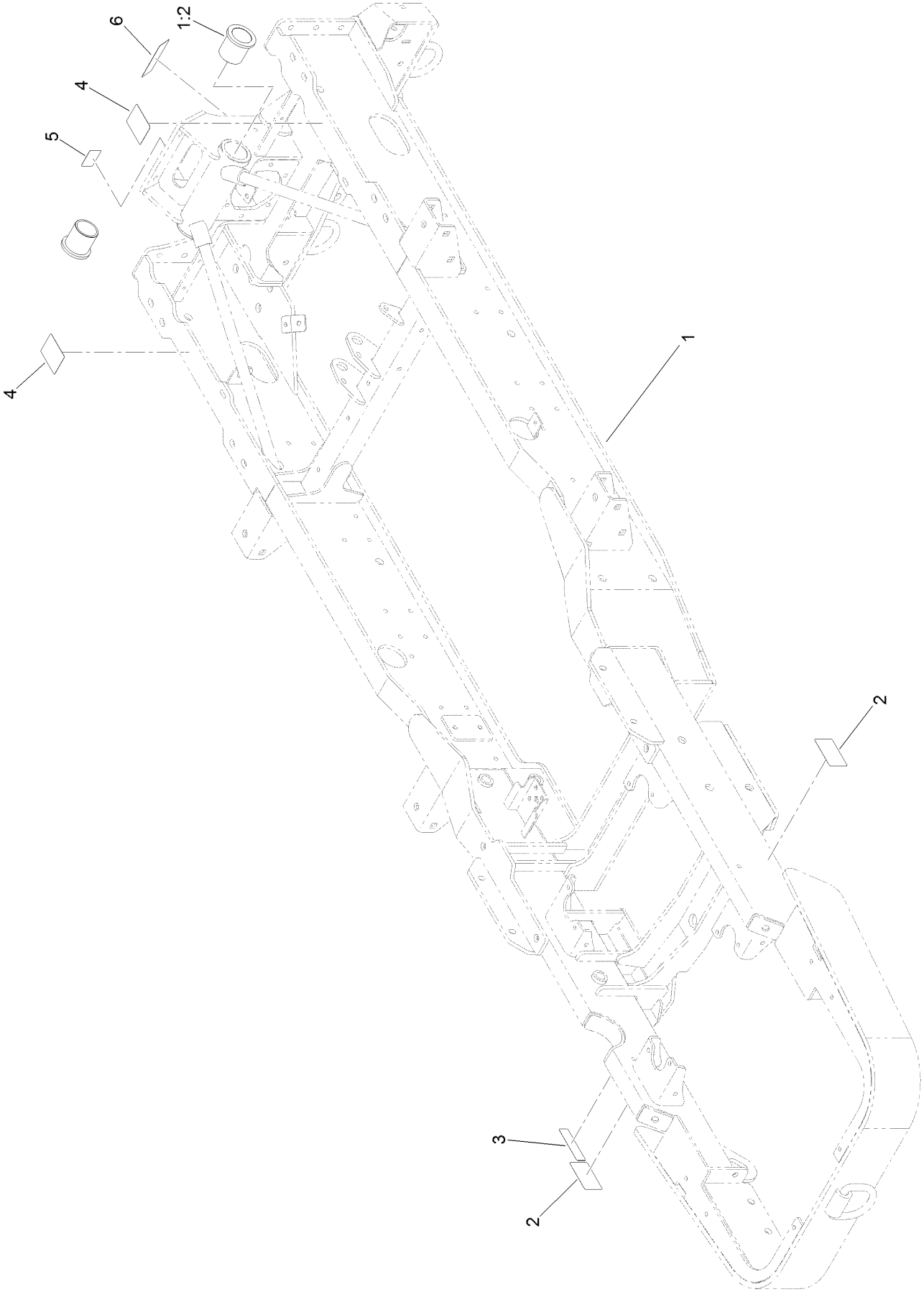

Rear Frame Decal and Bushing Assembly (continued)

Ref.	Part Number	Qty.	Description
1		1	Frame ASM ●
1:2	125-4386	2	Bushing-Castor
2	106-6754	2	Decal-Danger
3	133-8062	1	Decal-Arrestor, Spark
4	138-3799	2	Decal-Warning
5	138-4061	1	Decal-Load, Towing
6	125-6119	1	Decal-Danger

● Not serviced separately

Front Axle Assembly

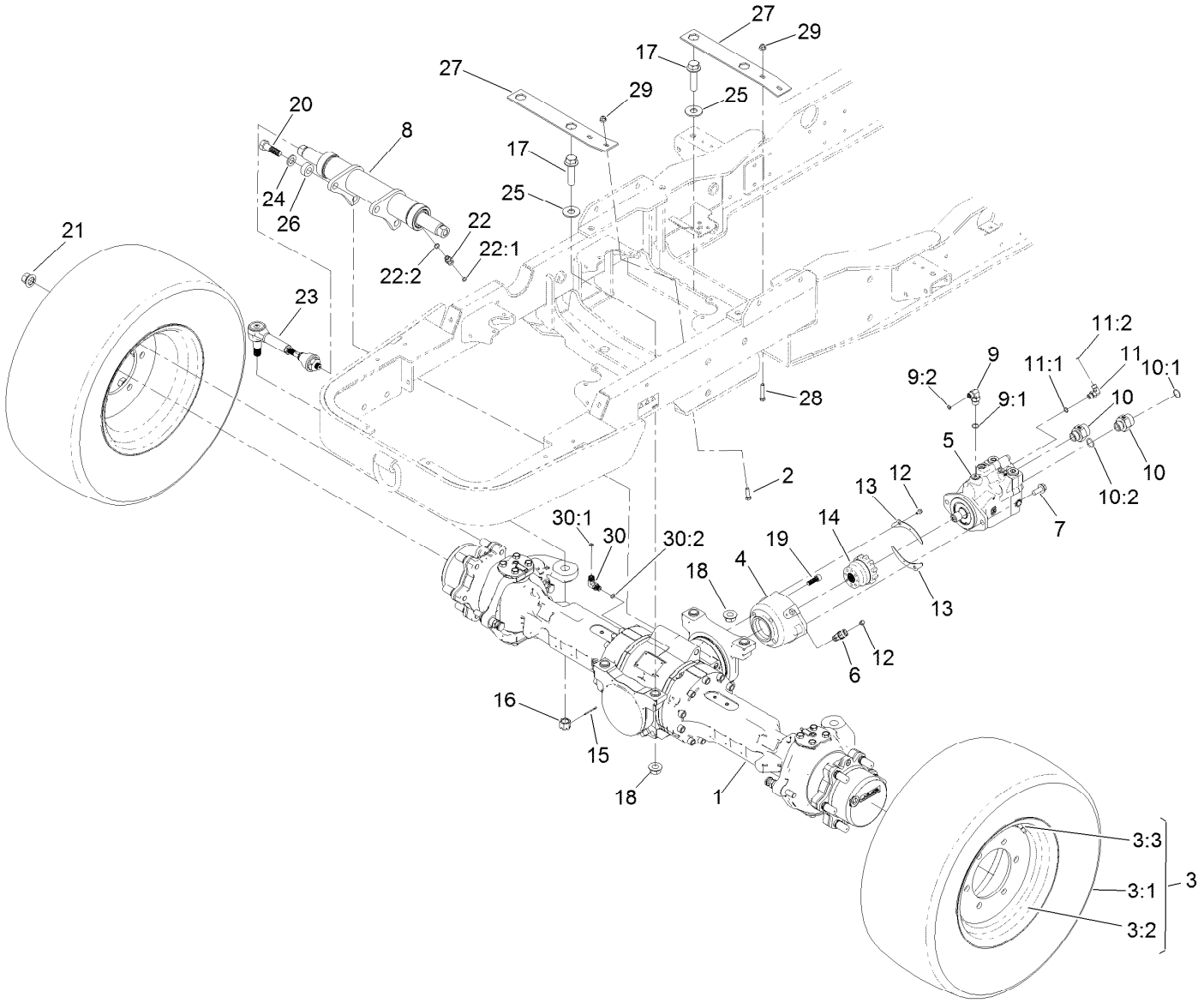

Front Axle Assembly (continued)

Ref.	Part Number	Qty.	Description
1	133-4861	1	Front Steerable Axle ASM
2	323-7	1	Screw-HH
3		2	Tire And Wheel ASM ●
3:1	133-4892	1	Wheel-Turf (15 X 8)
3:2	133-4897	1	Tire-Turf
3:3	232-24	1	Stem-Valve
4	133-7683	1	Mount-Motor, Front
5	131-5635	1	Hydraulic Motor ASM
6	136-5271	1	Sensor-Geartooth
7	3234-38	2	Screw-HHF
8	133-4863	1	Cylinder-HYD, Front
9	340-18	1	Fitting-HYD, 90 DEG
9:1	237-79	1	O-Ring
9:2	237-22	1	O-Ring
10	87-7290	2	Fitting-STR
10:1	340-65	1	O-Ring
10:2	237-81	1	O-Ring
11	340-82	1	Fitting-Elbow, 90 DEG
11:1	237-42	1	O-Ring
11:2	237-21	1	O-Ring
12	33103-012	3	Screw-HHF
13	133-7686	2	Plate-Cover

Ref.	Part Number	Qty.	Description
14	138-4054	1	Axle Coupler ASM
15	3272-13	2	Pin-Cotter
16	133-7763	2	Nut-Slotted
17	138-4087	4	Screw-HHF
18	138-4082	4	Nut-HF
19	136-5255	4	Screw-HSH
20	136-5259	4	Screw-HH
21	133-7706	12	Nut-Wheel
22	340-2	2	Fitting-Straight
22:1	237-22	1	O-Ring
22:2	237-42	1	O-Ring
23	133-4760	2	Tie Rod ASM
24	136-5267	4	Washer-Plain
25	3256-8	4	Washer-Flat
26	136-5276	4	Spacer
27	136-9747-03	2	Strap-Retainer
28	323-10	1	Screw-HH
29	104-8301	2	Nut-HF, NI
30	133-7658	1	Fitting-Elbow, 90 DEG
30:1	237-22	1	O-Ring
30:2	133-7657	1	O-Ring, M14

● Not serviced separately

Front Axle
Axle Housing Assembly

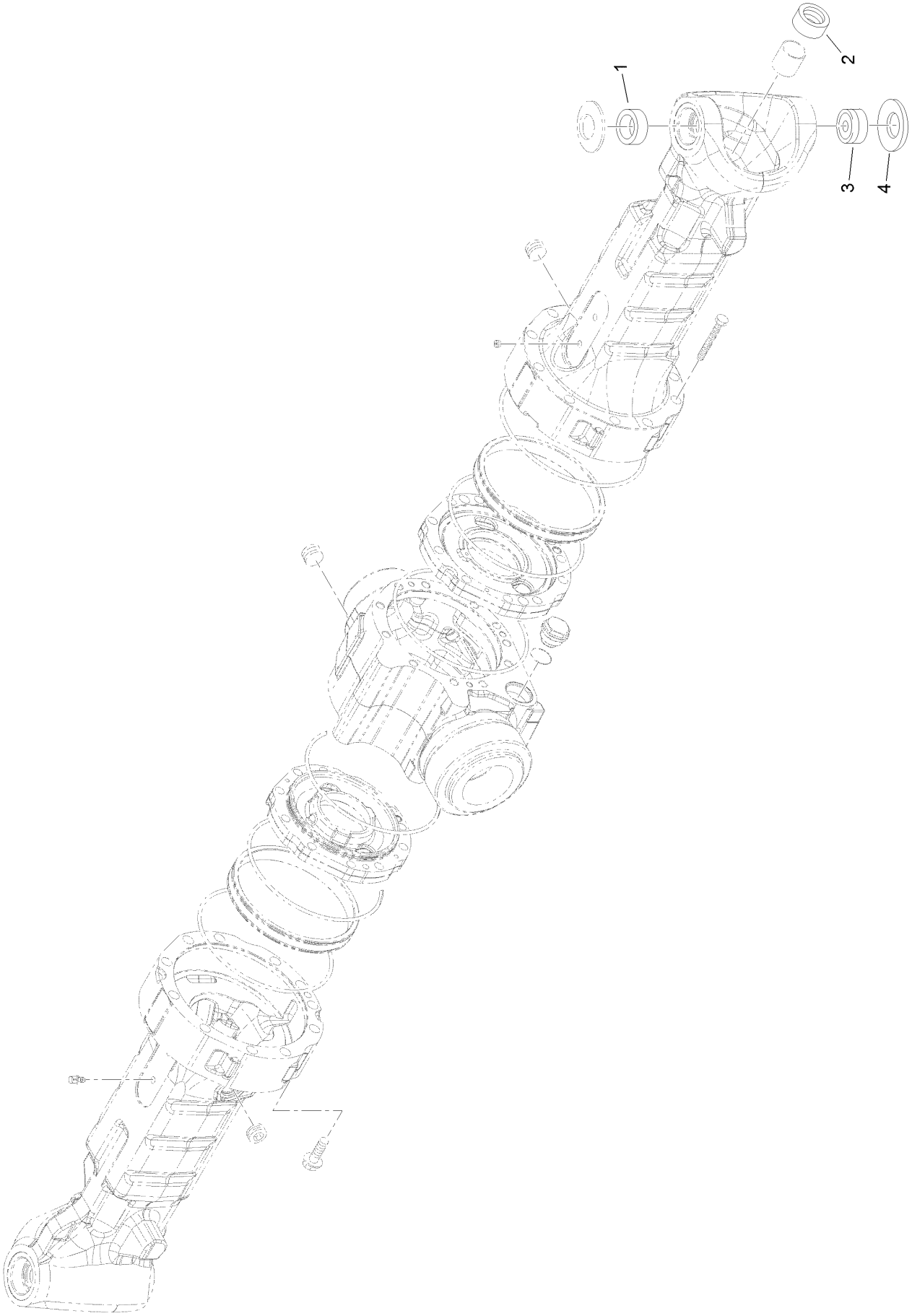

Front Axle
Axle Housing Assembly (continued)

Ref.	Part Number	Qty.	Description
1	138-7817	2	Bushing
2	133-5253	2	Ring-Seal, Oil
3	138-7816	2	Joint-Spherical
4	AU122268A1	2	Washer

Front Axle
Swivel Housings and Trunnions Assembly

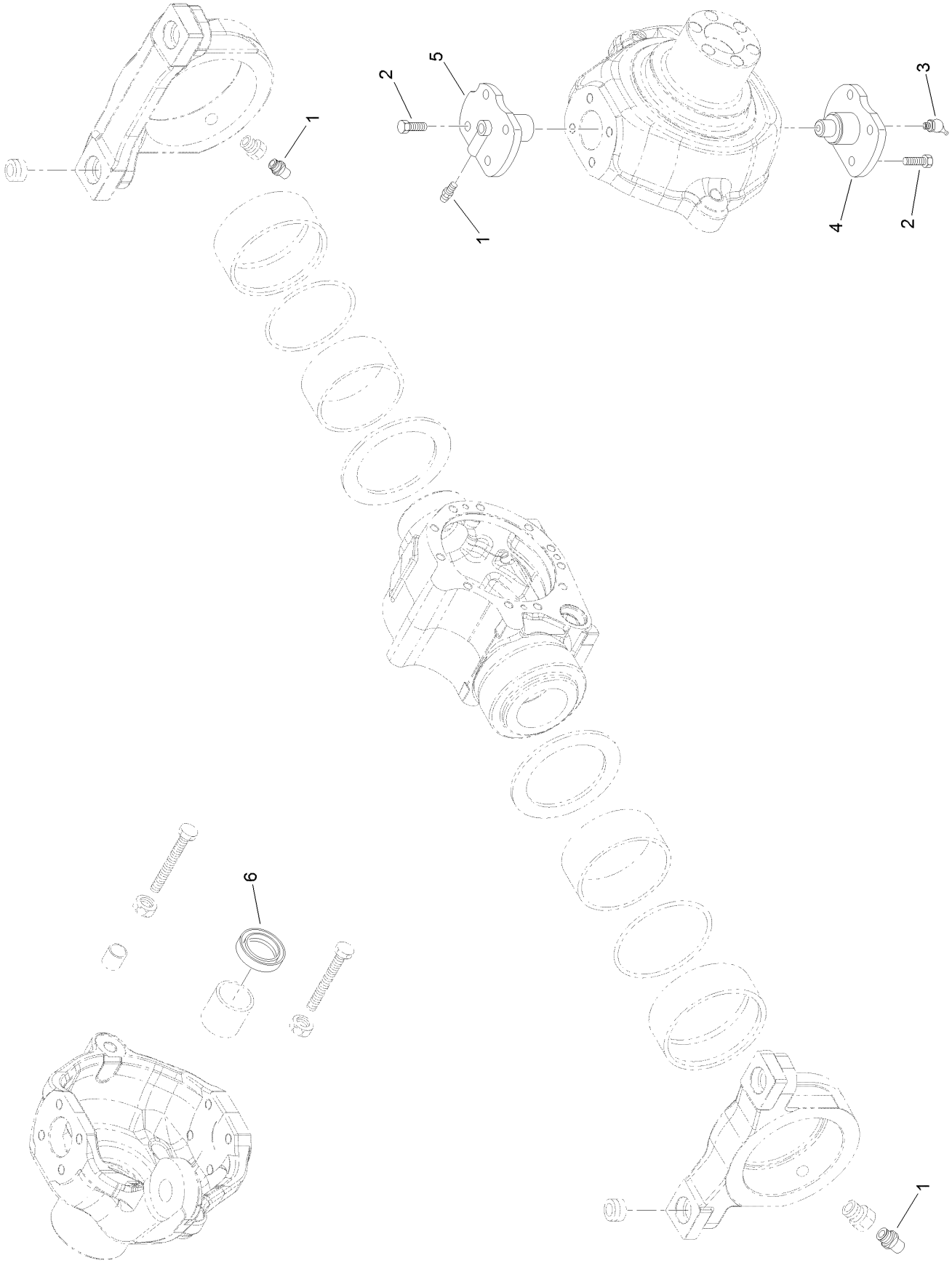

Front Axle
Swivel Housings and Trunnions Assembly (continued)

Ref.	Part Number	Qty.	Description
1	133-5215	4	Greaser-Nipple
2	138-7803	16	Screw
3	133-5235	2	Greaser-Nipple
4	138-7804	2	Pin-King
5	AU122265A1	2	Pin-King, Upper
6	138-7805	2	Seal

Front Axle
Bevel Gear Set Assembly

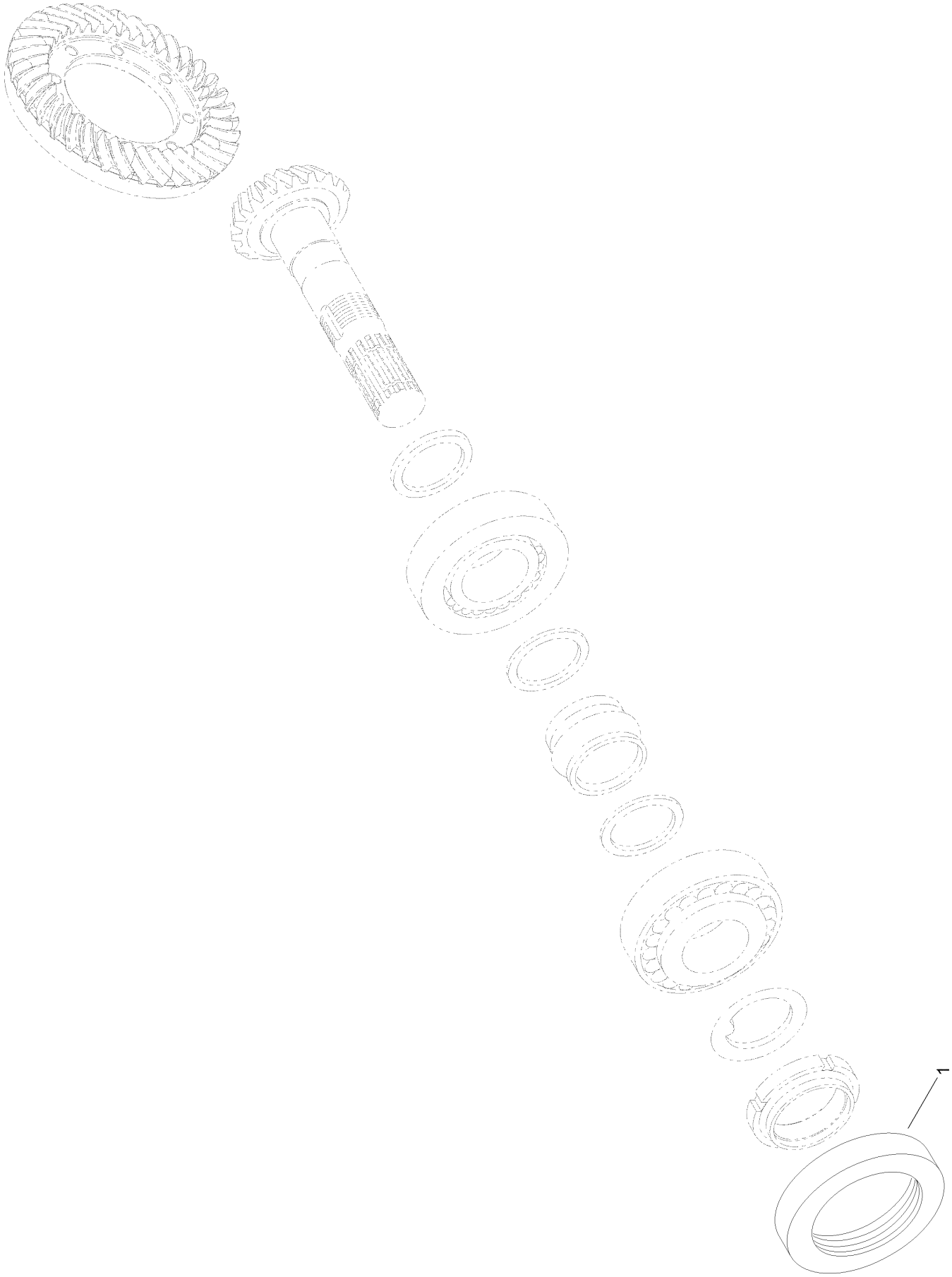

Front Axle
Bevel Gear Set Assembly (continued)

Ref.	Part Number	Qty.	Description
1	138-7806	1	Seal-Ring

Front Axle
Double U-Joint Assembly

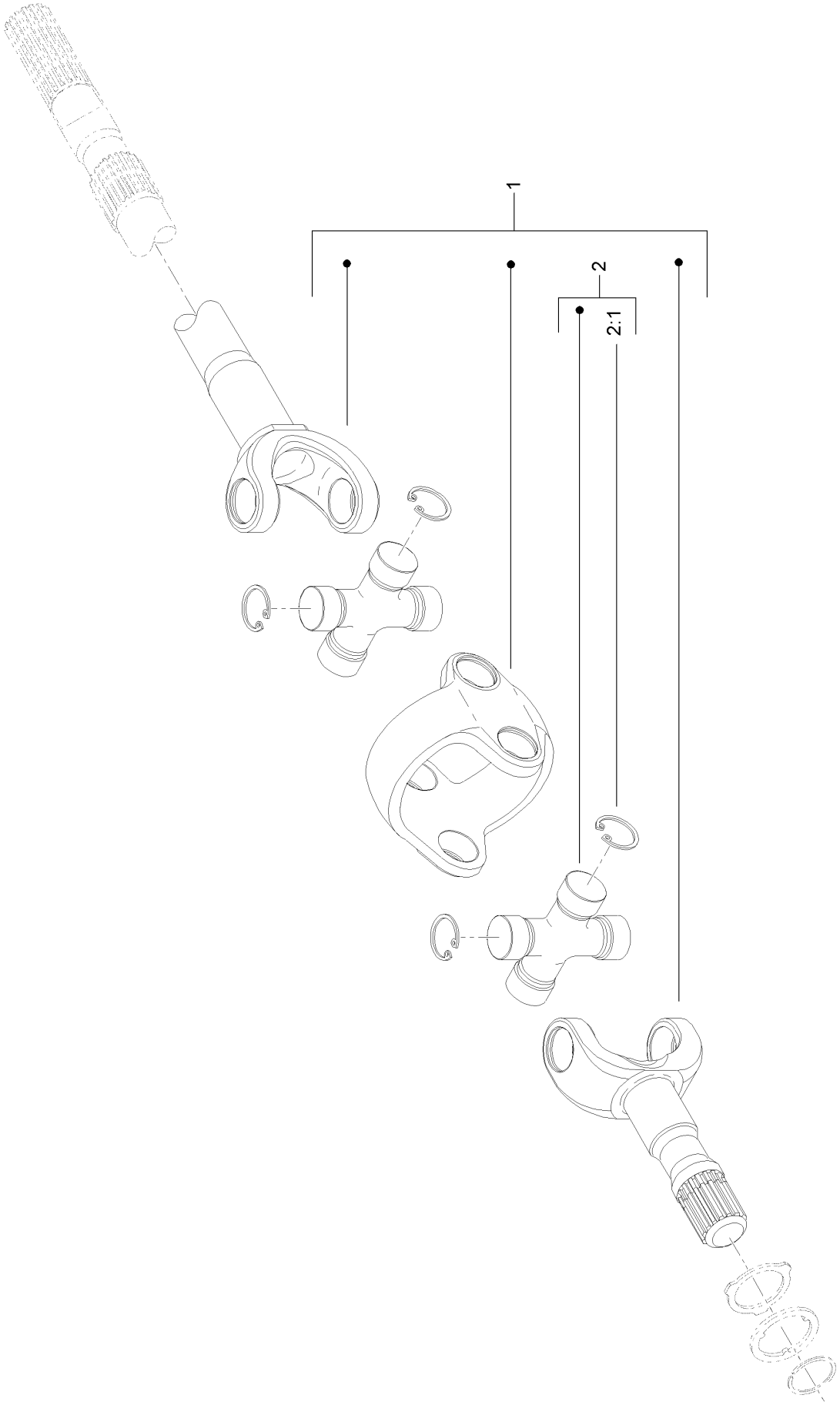

Front Axle
Double U-Joint Assembly (continued)

Ref.	Part Number	Qty.	Description
1	138-7807	2	Double Joint Kit
2	AU100546A1	4	Spider-A
2:1	AU100548A1	4	Ring-Snap

Front Axle
Wheel Hub Assembly

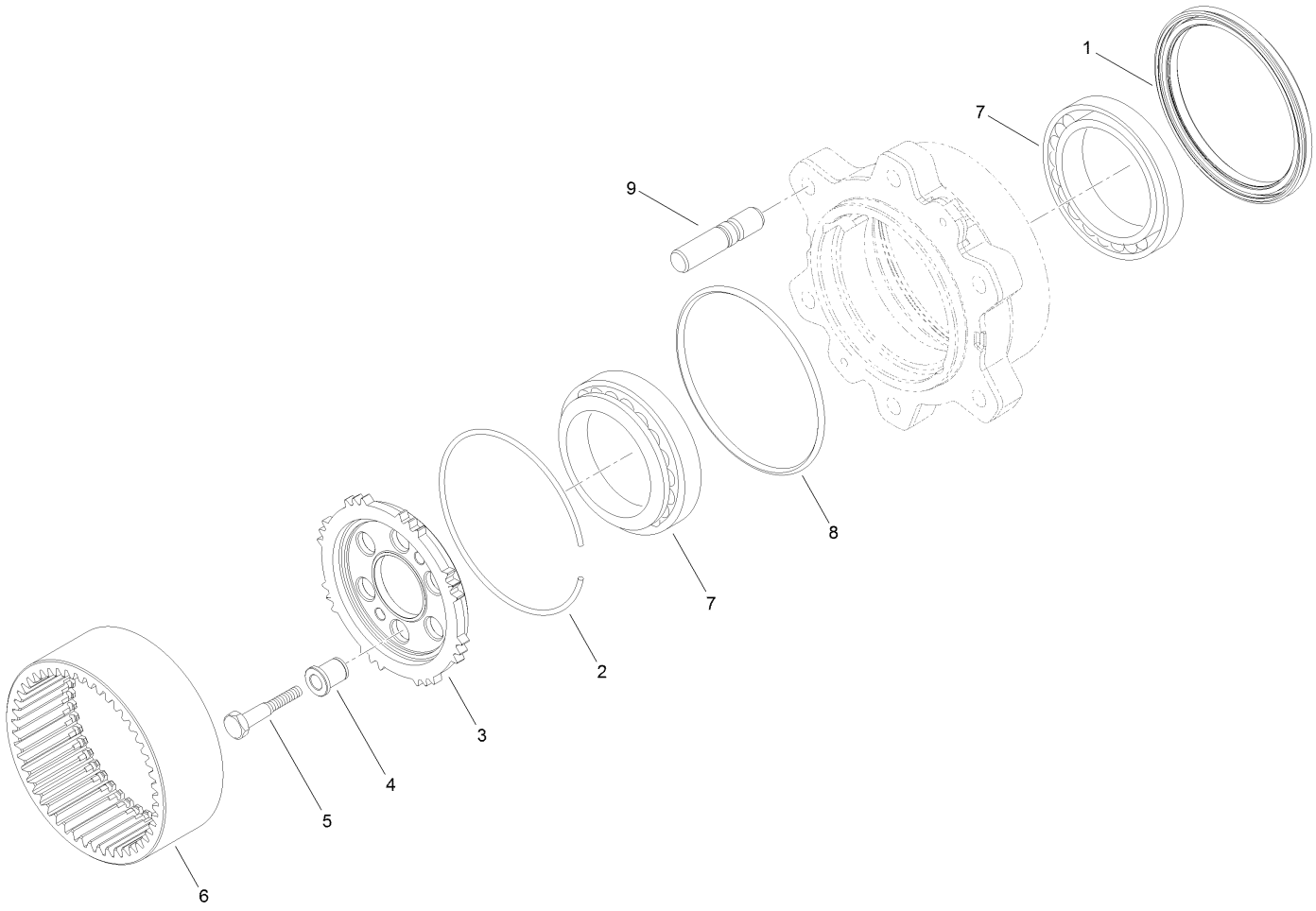

Front Axle
Wheel Hub Assembly (continued)

Ref.	Part Number	Qty.	Description
1	138-7811	2	Seal-Ring
2	AU112496A1	2	Ring
3	138-7812	2	Carrier-Hub, Wheel
4	138-7813	12	Bushing-Centering
5	AU116425A1	12	Bolt
6	AU112495A1	2	Gear
7	138-7814	4	Bearing
8	138-7815	2	O-Ring
9	auk260218	6	Stud

Front Axle
Planetary Carrier Assembly

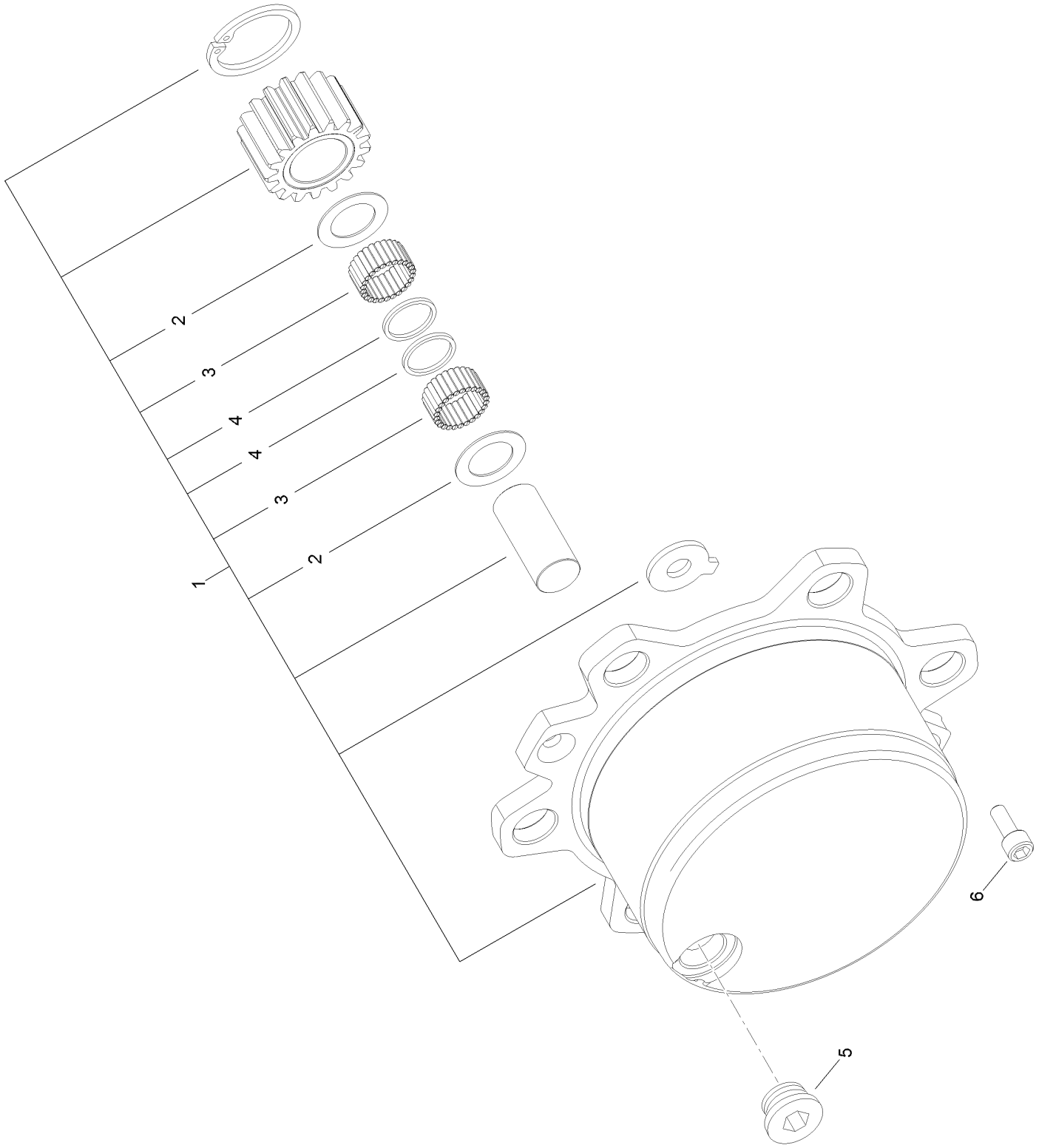

Front Axle
Planetary Carrier Assembly (continued)

Ref.	Part Number	Qty.	Description
1	138-7809	2	Planetary Carrier ASM
2	AU112501A1	6	Washer
3	AU141368A1	32	Bearing-Needle
4	AU141371A1	6	Washer-Thrust
5	133-5295	2	Plug
6	138-7810	4	Screw

Motor Assembly No. 131-5635

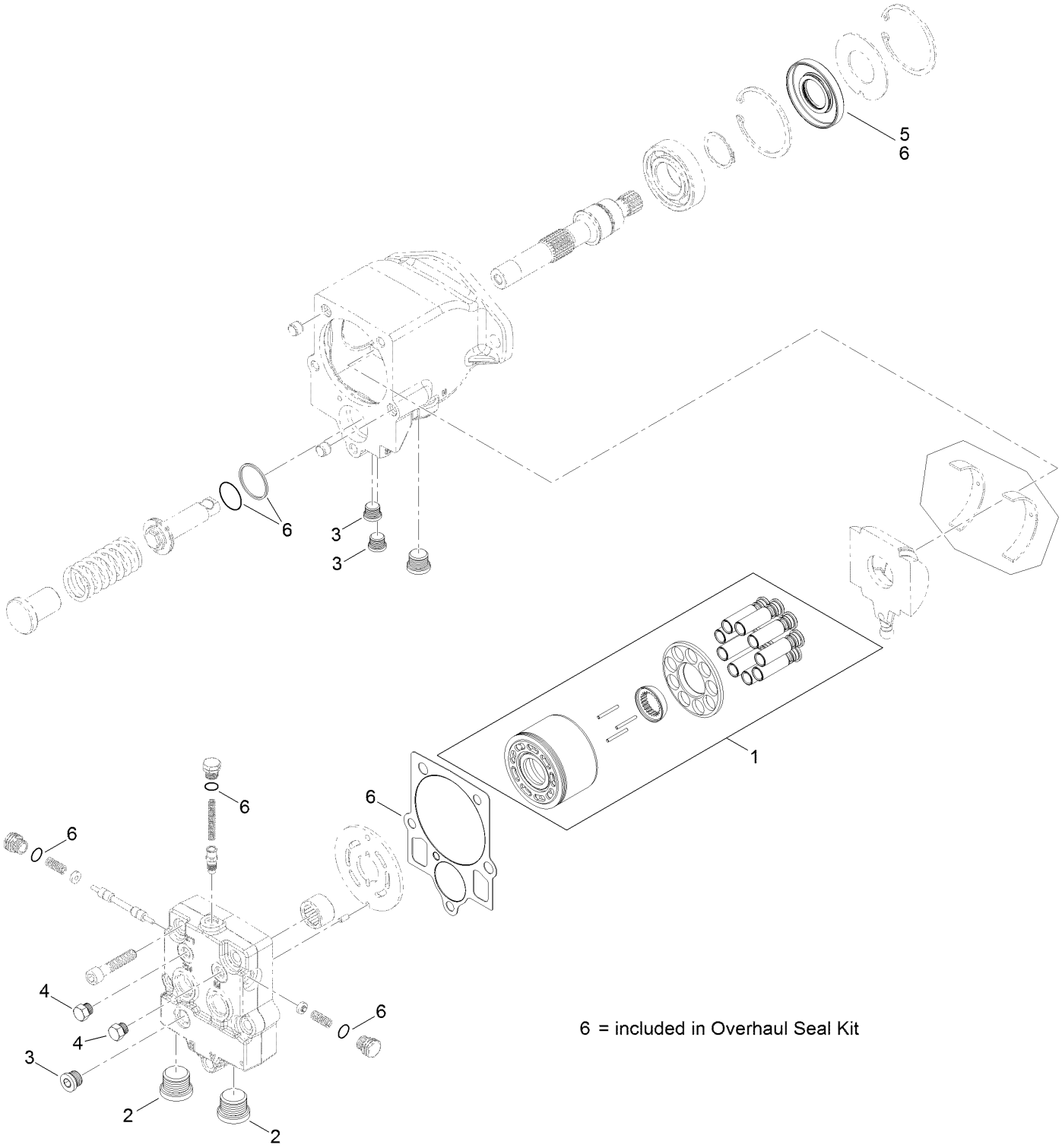

6 = included in Overhaul Seal Kit

Motor Assembly No. 131-5635 (continued)

Ref.	Part Number	Qty.	Description
1	125-4639	1	Cylinder Block Kit
2	69-3130	2	Plug
3	75-0070	3	Plug
4	92-1352	2	Plug
5	127-6214	1	Seal-Lip
6	138-7823	1	Overhaul Seal Kit

Hydraulic Cylinder Assembly No. 133-4863

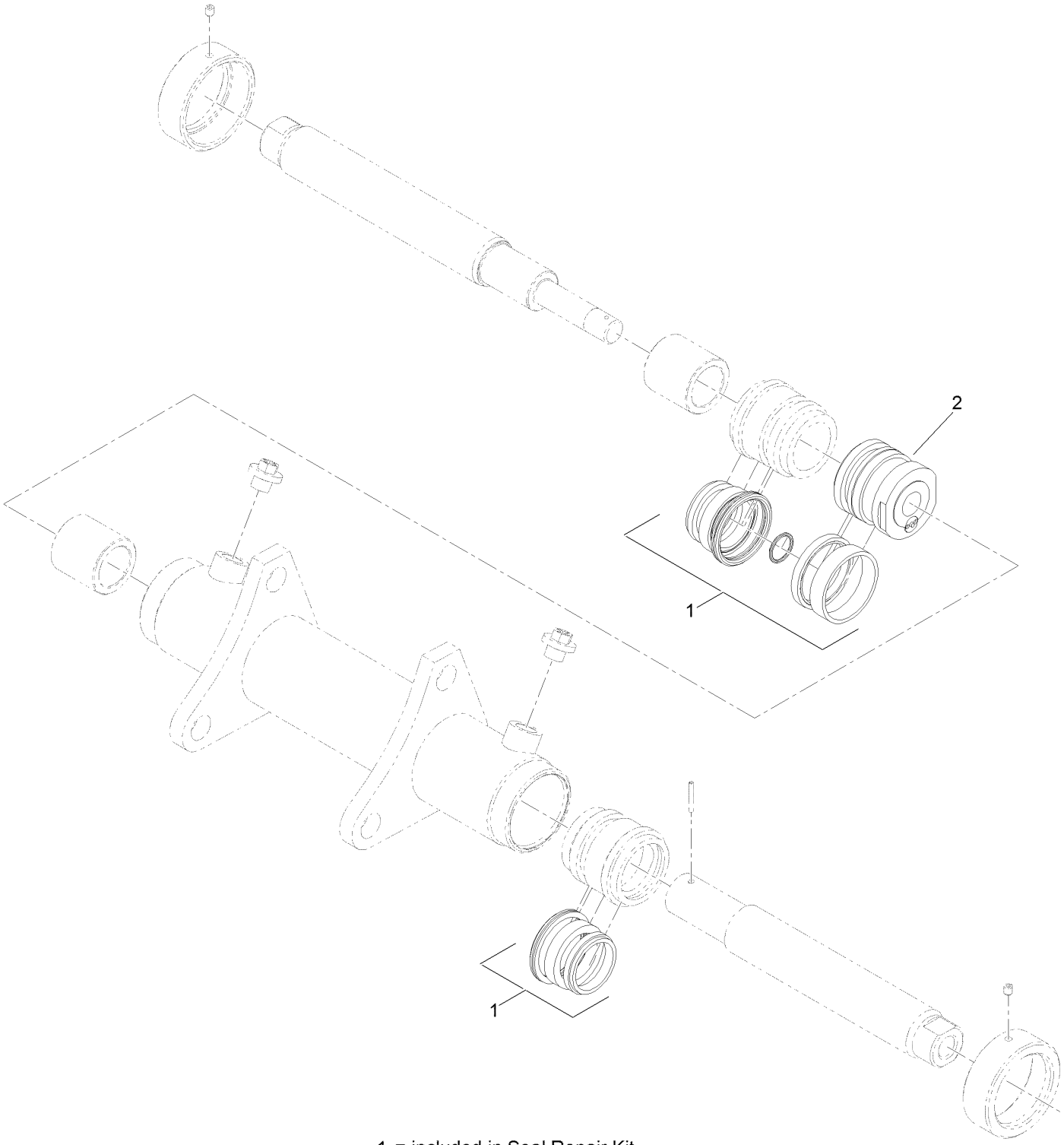

1 = included in Seal Repair Kit

Hydraulic Cylinder Assembly No. 133-4863 (continued)

Ref.	Part Number	Qty.	Description
1	138-7820	1	Seal Repair Kit
2	138-8163	1	Piston

Tie Rod Assembly No. 133-4760

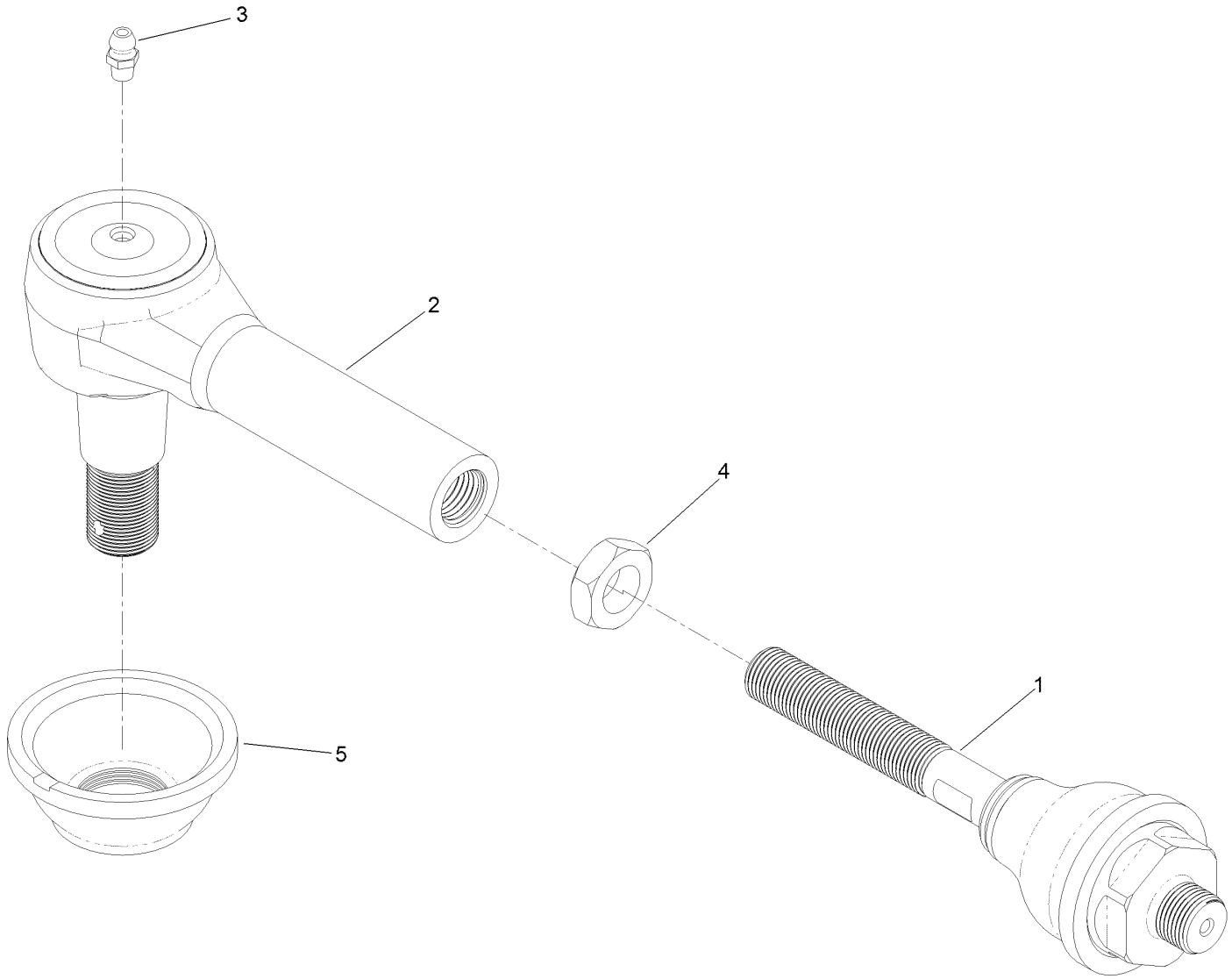

Tie Rod Assembly No. 133-4760 (continued)

Ref.	Part Number	Qty.	Description
1	133-4761	1	Inner Tie Rod ASM
2	133-4762	1	Outer Tie Rod ASM
3	302-5	1	Fitting-Grease
4	95-4182	1	Nut-Hex, Jam
5	136-5290	1	Boot-Dust

Rear Axle Assembly

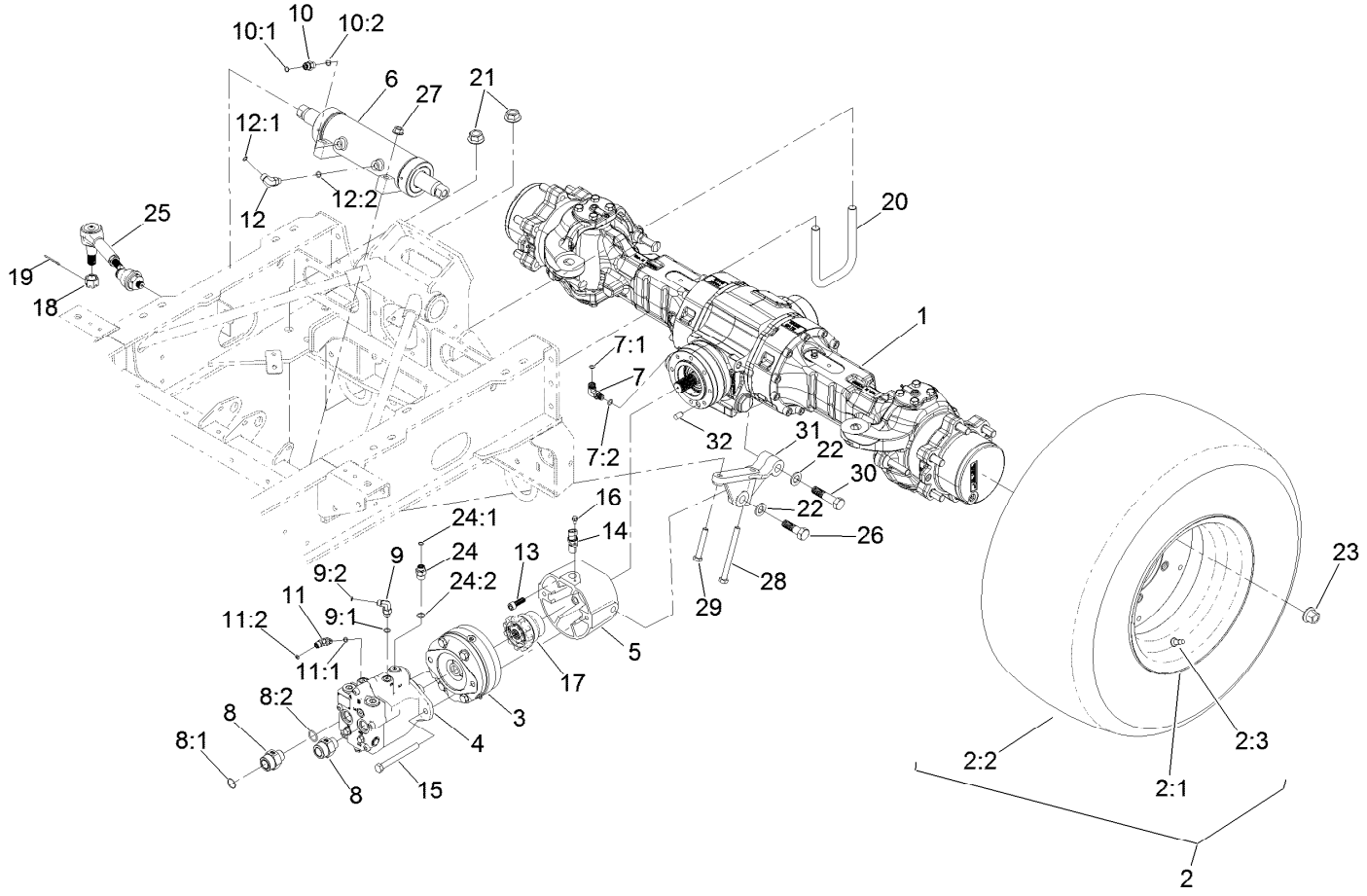

Rear Axle Assembly (continued)

Ref.	Part Number	Qty.	Description
1	133-4860	1	Rear Steerable Axle ASM
2		2	Tire And Wheel ASM ●
2:1	138-4089	1	Wheel-Turf
2:2	133-4894	1	Tire-Turf
2:3	232-24	1	Stem-Valve
3	133-4850	1	Parking Brake ASM
4	131-5635	1	Hydraulic Motor ASM
5	133-7681	1	Mount-Motor, Rear
6	133-4864	1	Cylinder-HYD, Rear
7	133-7658	1	Fitting-Elbow, 90 DEG
7:1	237-22	1	O-Ring
7:2	133-7657	1	O-Ring, M14
8	87-7290	2	Fitting-STR
8:1	340-65	1	O-Ring
8:2	237-81	1	O-Ring
9	340-82	1	Fitting-Elbow, 90 DEG
9:1	237-42	1	O-Ring
9:2	237-21	1	O-Ring
10	340-2	1	Fitting-Straight
10:1	237-22	1	O-Ring
10:2	237-42	1	O-Ring
11	340-132	1	Fitting-Elbow, 90 DEG
11:1	237-78	1	O-Ring
11:2	237-21	1	O-Ring
12	340-77	1	Fitting-Elbow, 90 DEG
12:1	237-22	1	O-Ring
12:2	237-42	1	O-Ring
13	136-5255	4	Screw-HSH
14	136-5271	1	Sensor-Geartooth
15	325-19	2	Screw-HH
16	33103-012	1	Screw-HHF
17	138-4054	1	Axle Coupler ASM
18	133-7763	2	Nut-Slotted
19	3272-13	2	Pin-Cotter
20	136-5251	4	Bolt-U
21	138-4082	8	Nut-HF
22	136-5267	4	Washer-Plain
23	133-7706	12	Nut-Wheel
24	340-3	1	Fitting-Straight
24:1	237-22	1	O-Ring
24:2	237-79	1	O-Ring
25	133-4760	2	Tie Rod ASM
26	136-5259	2	Screw-HH
27	32128-23	4	Nut-HF
28	325-22	2	Screw-HH
29	325-12	2	Screw-HH
30	136-5268	2	Screw-HH
31	136-9749	2	Support-Cylinder, Rear
32	136-5277	1	Pin-Dowel

● Not serviced separately

Rear Axle
Axle Housing Assembly

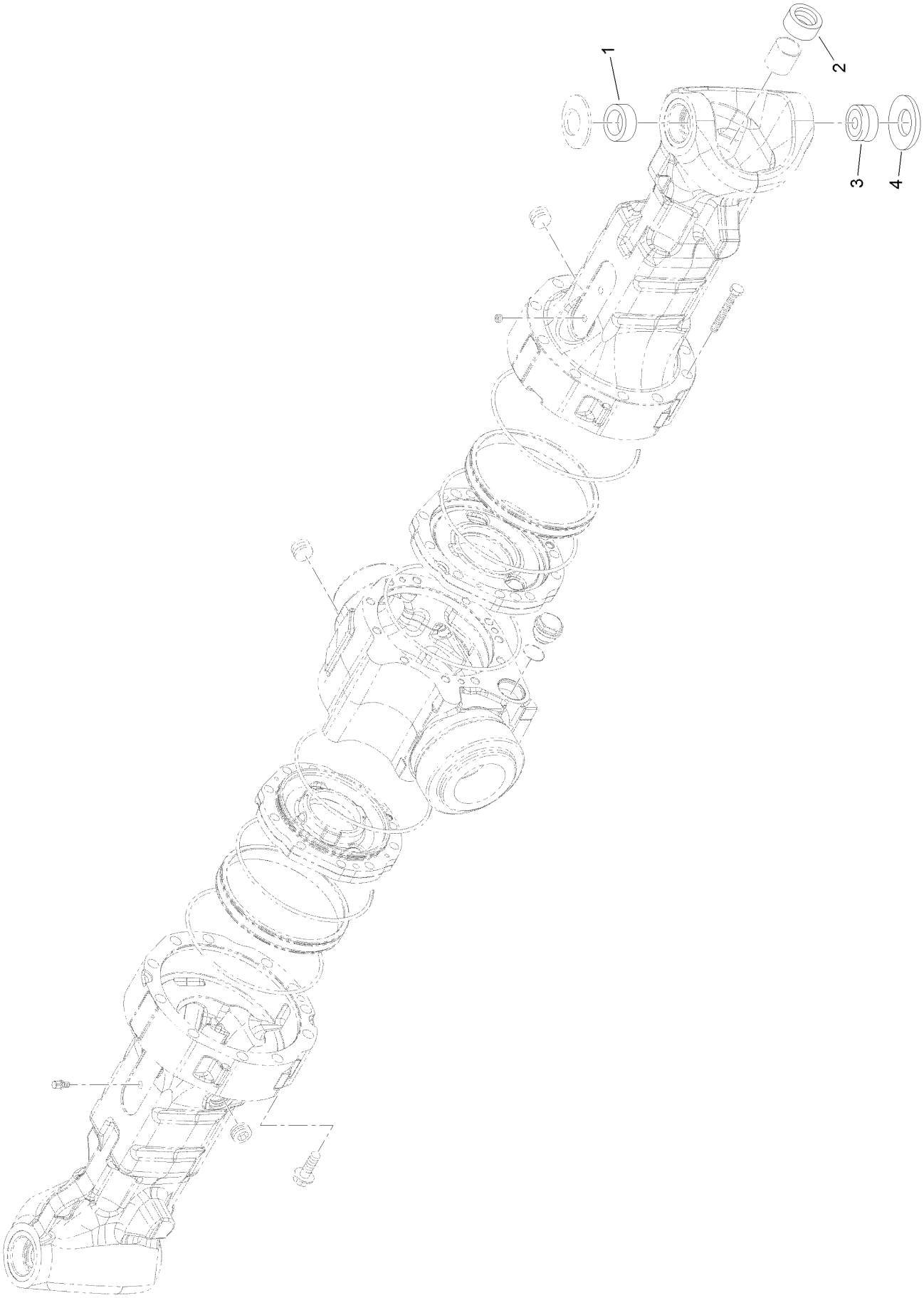

Rear Axle
Axle Housing Assembly (continued)

Ref.	Part Number	Qty.	Description
1	138-7817	2	Bushing
2	133-5253	2	Ring-Seal, Oil
3	138-7816	2	Joint-Spherical
4	AU122268A1	2	Washer

Rear Axle
Swivel Housings and Trunnions Assembly

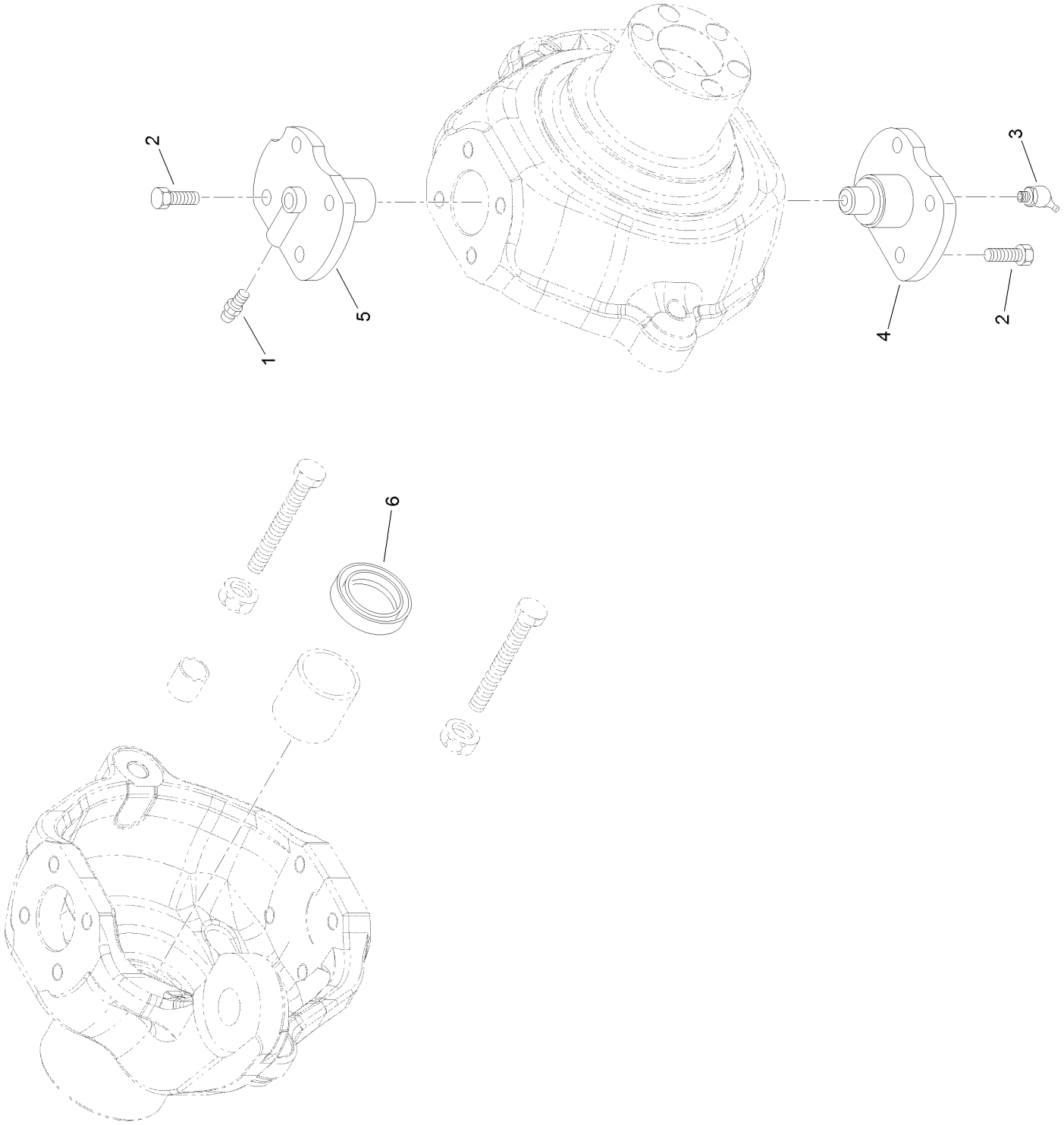

Rear Axle
Swivel Housings and Trunnions Assembly (continued)

Ref.	Part Number	Qty.	Description
1	133-5215	4	Greaser-Nipple
2	138-7803	16	Screw
3	133-5235	2	Greaser-Nipple
4	138-7804	2	Pin-King
5	AU122265A1	2	Pin-King, Upper
6	138-7805	2	Seal

Rear Axle
Bevel Gear Set Assembly

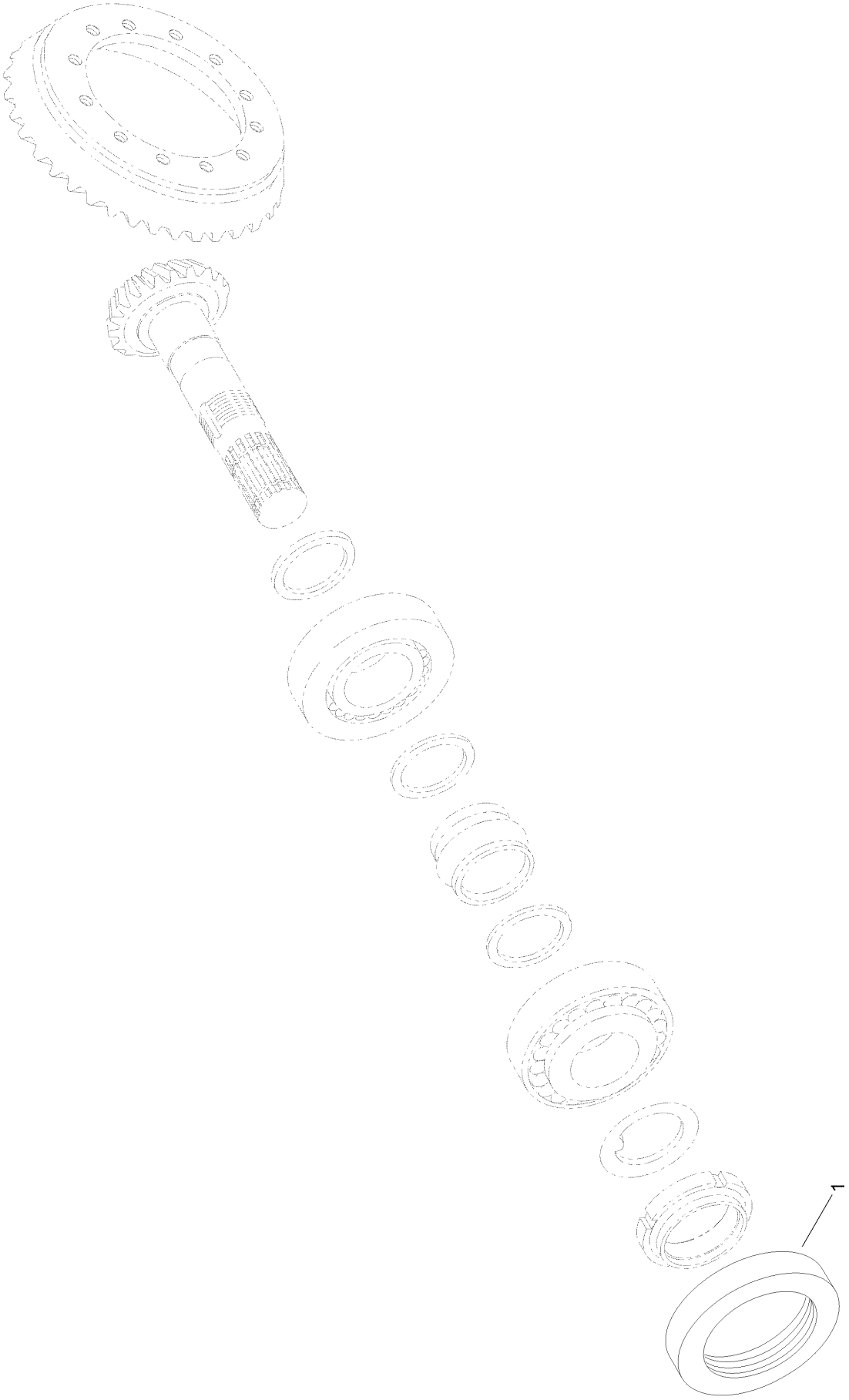

Rear Axle
Bevel Gear Set Assembly (continued)

Ref.	*Part Number*	*Qty.*	*Description*
1	138-7806	1	Seal-Ring

Rear Axle
Double U-Joint Assembly

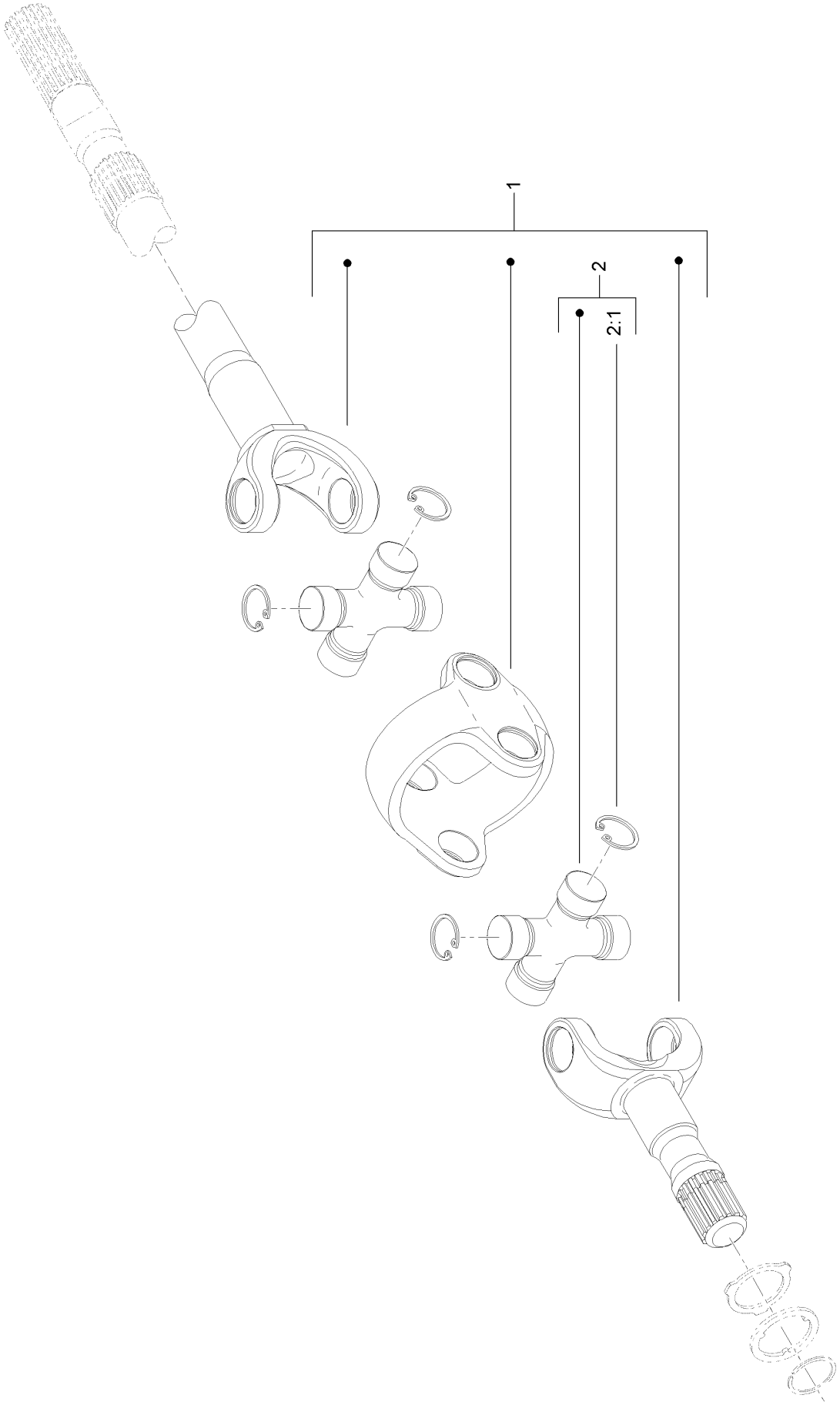

Rear Axle
Double U-Joint Assembly (continued)

Ref.	Part Number	Qty.	Description
1	138-7807	2	Double Joint Kit
2	AU100546A1	4	Spider-A
2:1	AU100548A1	4	Ring-Snap

Rear Axle
Wheel Hub Assembly

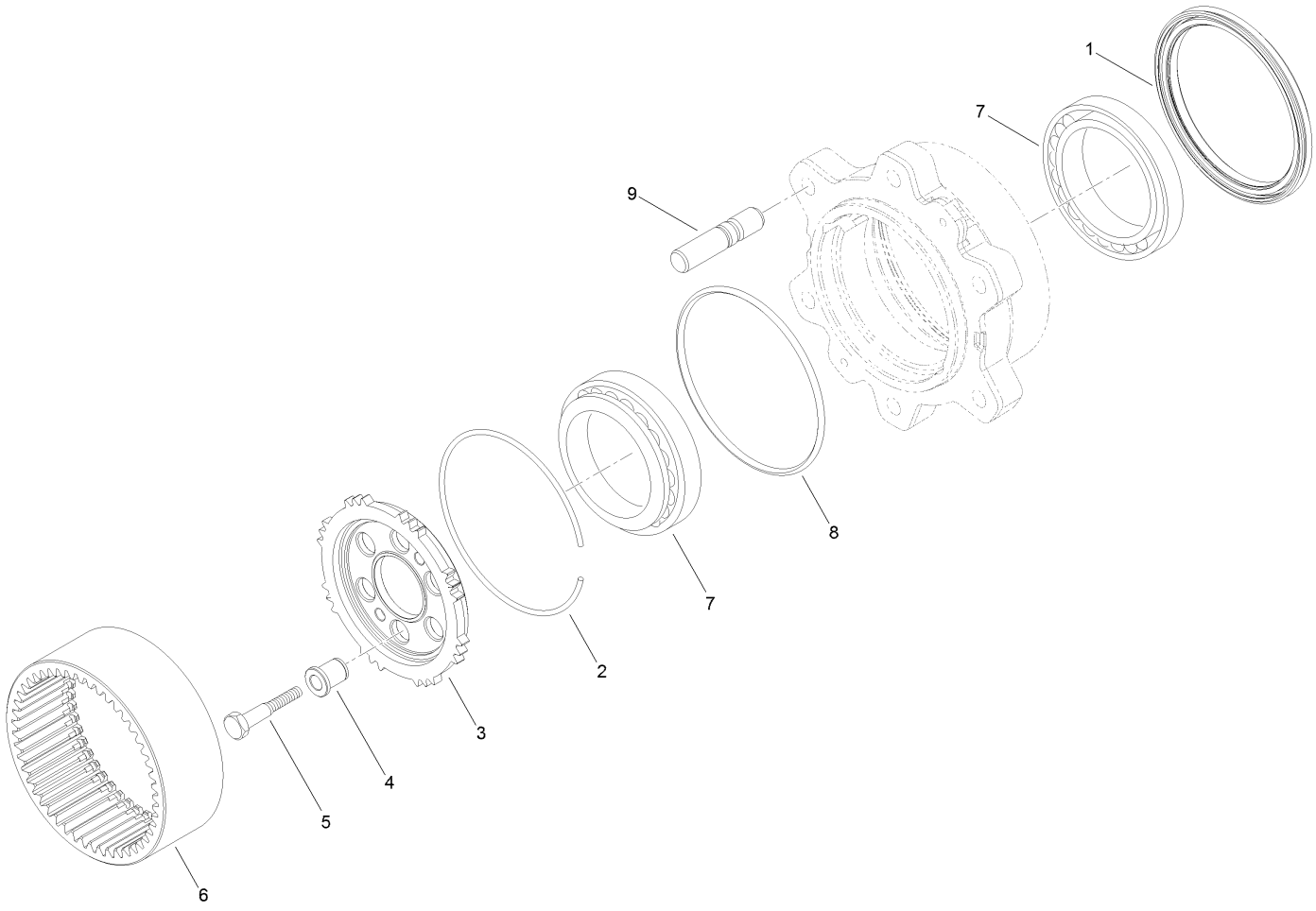

Rear Axle
Wheel Hub Assembly (continued)

Ref.	Part Number	Qty.	Description
1	138-7811	2	Seal-Ring
2	AU112496A1	2	Ring
3	138-7812	2	Carrier-Hub, Wheel
4	138-7813	12	Bushing-Centering
5	AU116425A1	12	Bolt
6	AU112495A1	2	Gear
7	138-7814	4	Bearing
8	138-7815	2	O-Ring
9	auk260218	6	Stud

Rear Axle
Planetary Carrier Assembly

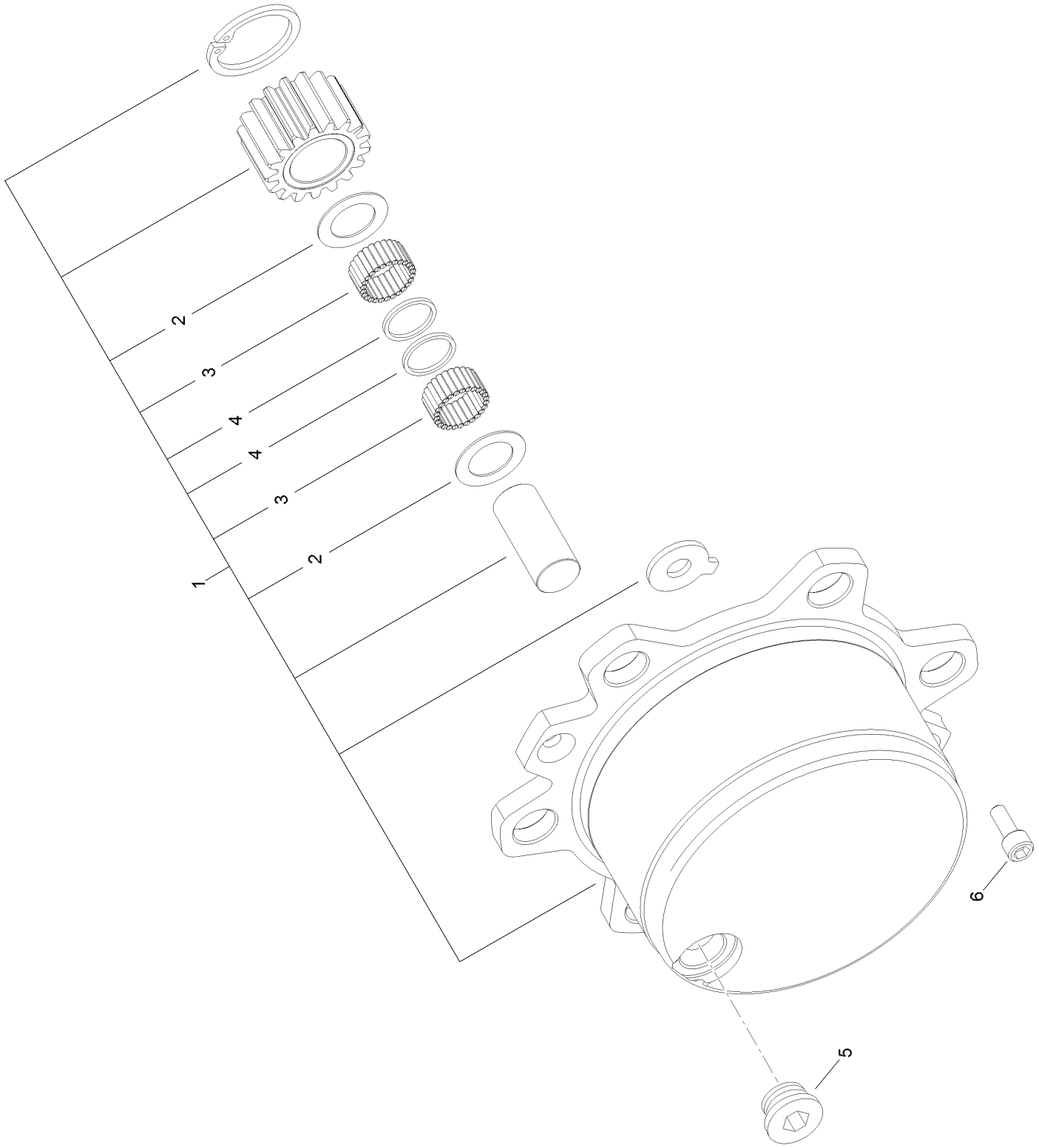

Rear Axle
Planetary Carrier Assembly (continued)

Ref.	Part Number	Qty.	Description
1	138-7809	2	Planetary Carrier ASM
2	AU112501A1	6	Washer
3	AU141368A1	32	Bearing-Needle
4	AU141371A1	6	Washer-Thrust
5	133-5295	2	Plug
6	138-7810	4	Screw

Parking Brake Assembly No. 133-4850

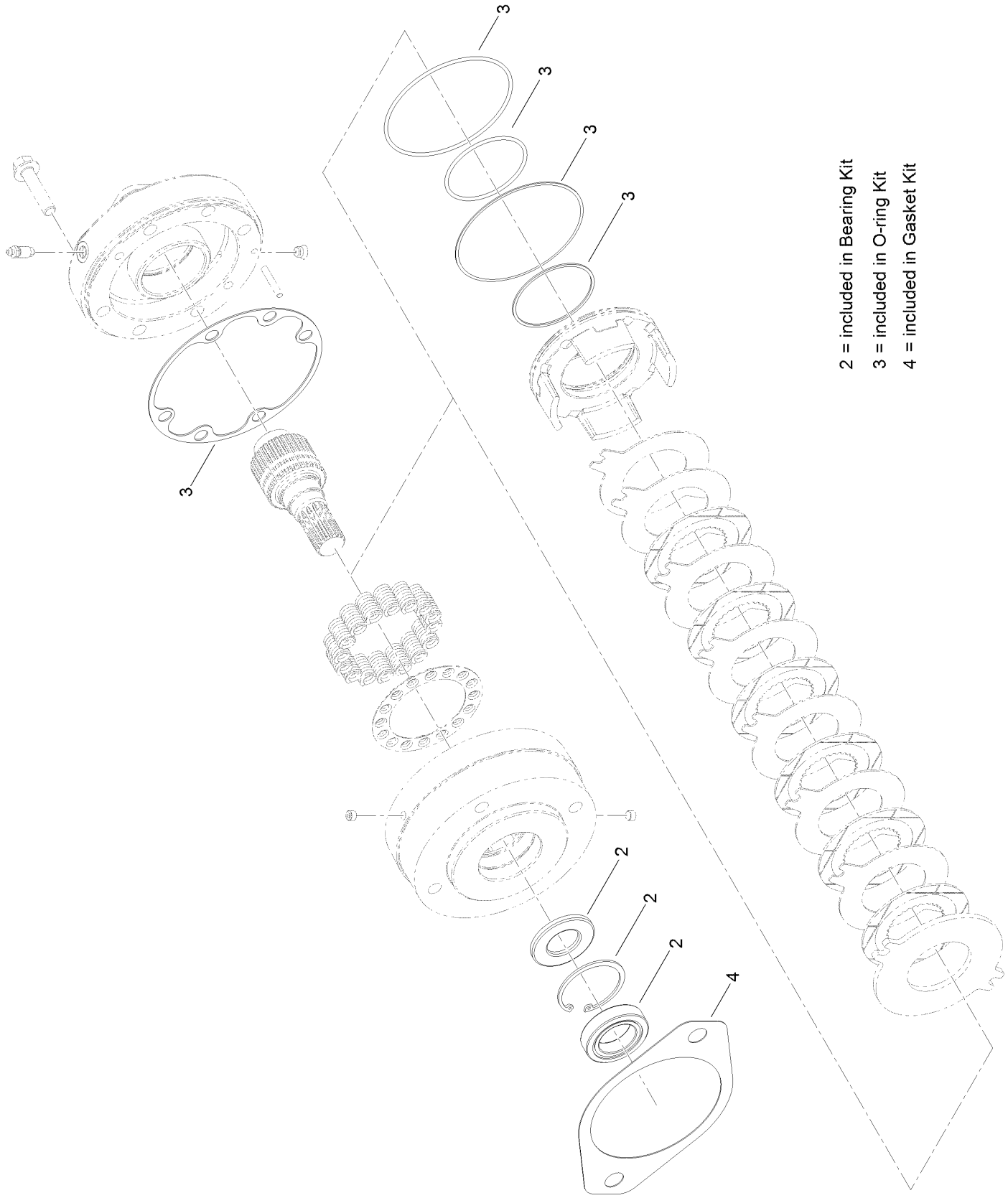

Parking Brake Assembly No. 133-4850 (continued)

Ref.	*Part Number*	*Qty.*	*Description*
2	138-7800	1	Bearing Kit
3	138-7801	1	O-Ring Kit
4	138-7802	1	Gasket Kit

Hydraulic Cylinder Assembly No. 133-4864

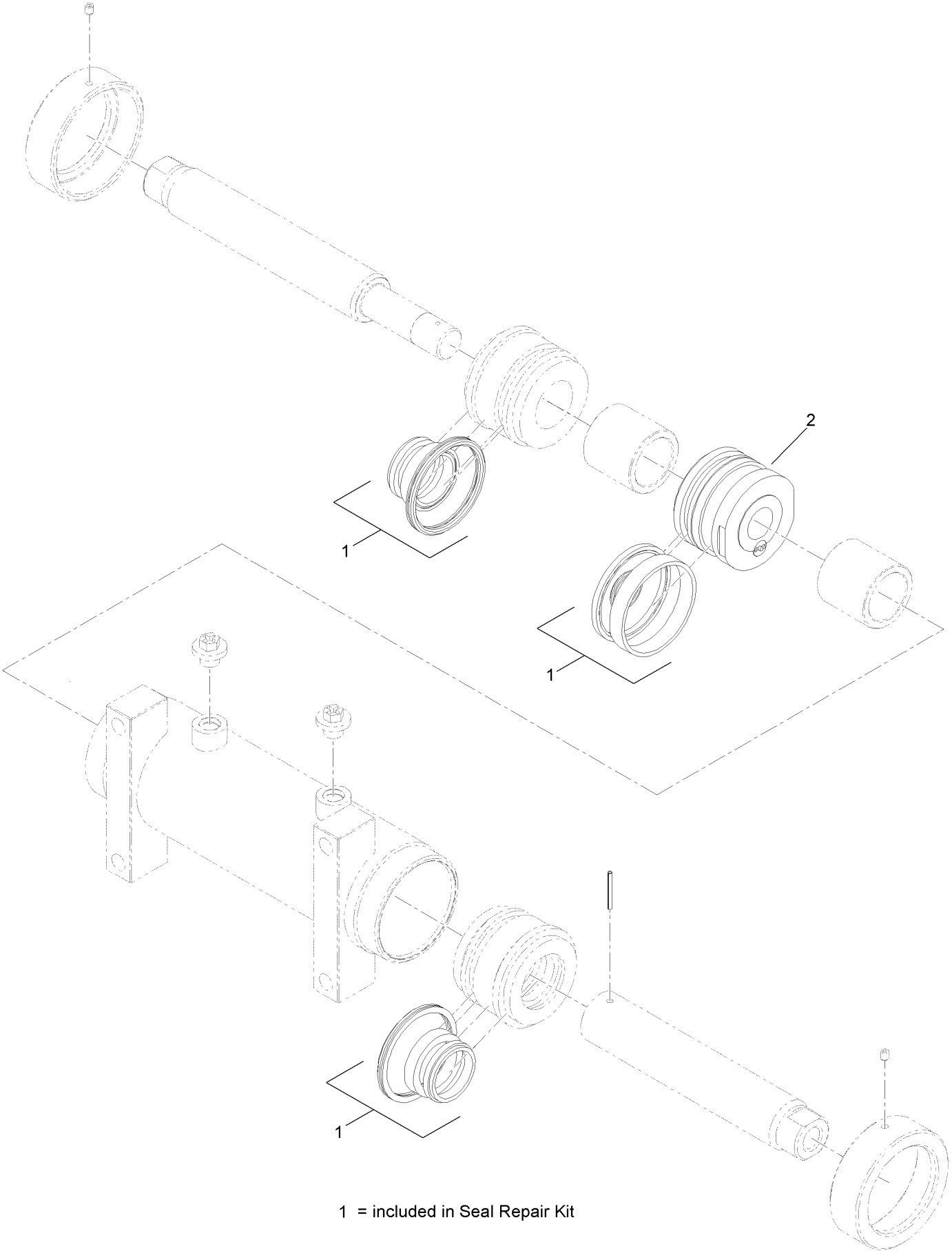

1 = included in Seal Repair Kit

Hydraulic Cylinder Assembly No. 133-4864 (continued)

Ref.	Part Number	Qty.	Description
1	138-7819	1	Seal Repair Kit
2	138-8164	1	Piston (3In Ball Valve ASM)

Standard Box Assembly

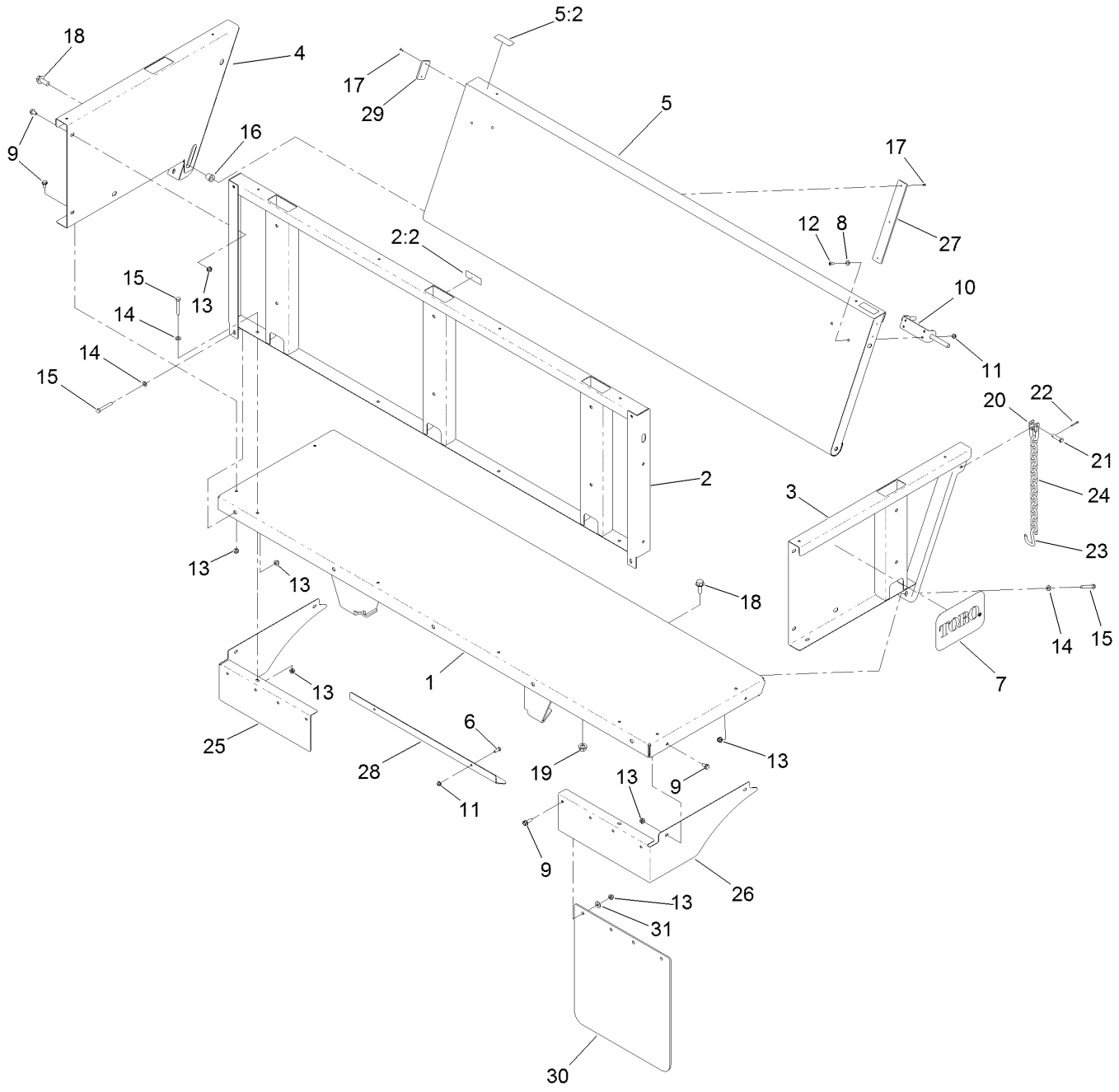

Standard Box Assembly (continued)

Ref.	Part Number	Qty.	Description
1	136-9832-03	1	Bed ASM
2	138-3851	1	Panel ASM
2:2	115-7739	1	Decal-No Riders
3	136-9830-03	1	Panel-LH
4	136-9831-03	1	Panel-RH
5	138-4080	1	Tailgate ASM
5:2	138-4107	2	Decal-Hazard, Pinch
6	321-4	2	Screw-HH
7	92-1242	2	Decal
8	3256-1	4	Washer-Flat
9	3234-47	20	Screw-HHF
10	T62021030	2	Latch-Spring
11	104-7201	6	Nut-HF, NI
12	3274-31	4	Screw-HSBH
13	104-8300	28	Nut-HF, NI
14	3256-23	8	Washer-Plain
15	322-11	8	Screw-HH
16	256-243	2	Bearing-Flange
17	3290-271	10	Rivet-Pop
18	3234-38	6	Screw-HHF
19	99-5107	4	Nut-Lock
20	5-2942	2	Shackle
21	283-10	2	Pin-Clevis
22	3272-10	2	Pin-Cotter
23	136-9808	2	Hook-Tailgate
24	136-9809	2	Chain
25	136-9806-03	1	Filler-RH
26	136-9807-03	1	Filler-LH
27	136-9953	2	Pad-Wear
28	136-9954-03	1	Shield-Box
29	136-9956	2	Pad-Wear
30	136-9999	2	Mudflap-Box
31	3256-3	8	Washer-Flat

Panel Assembly

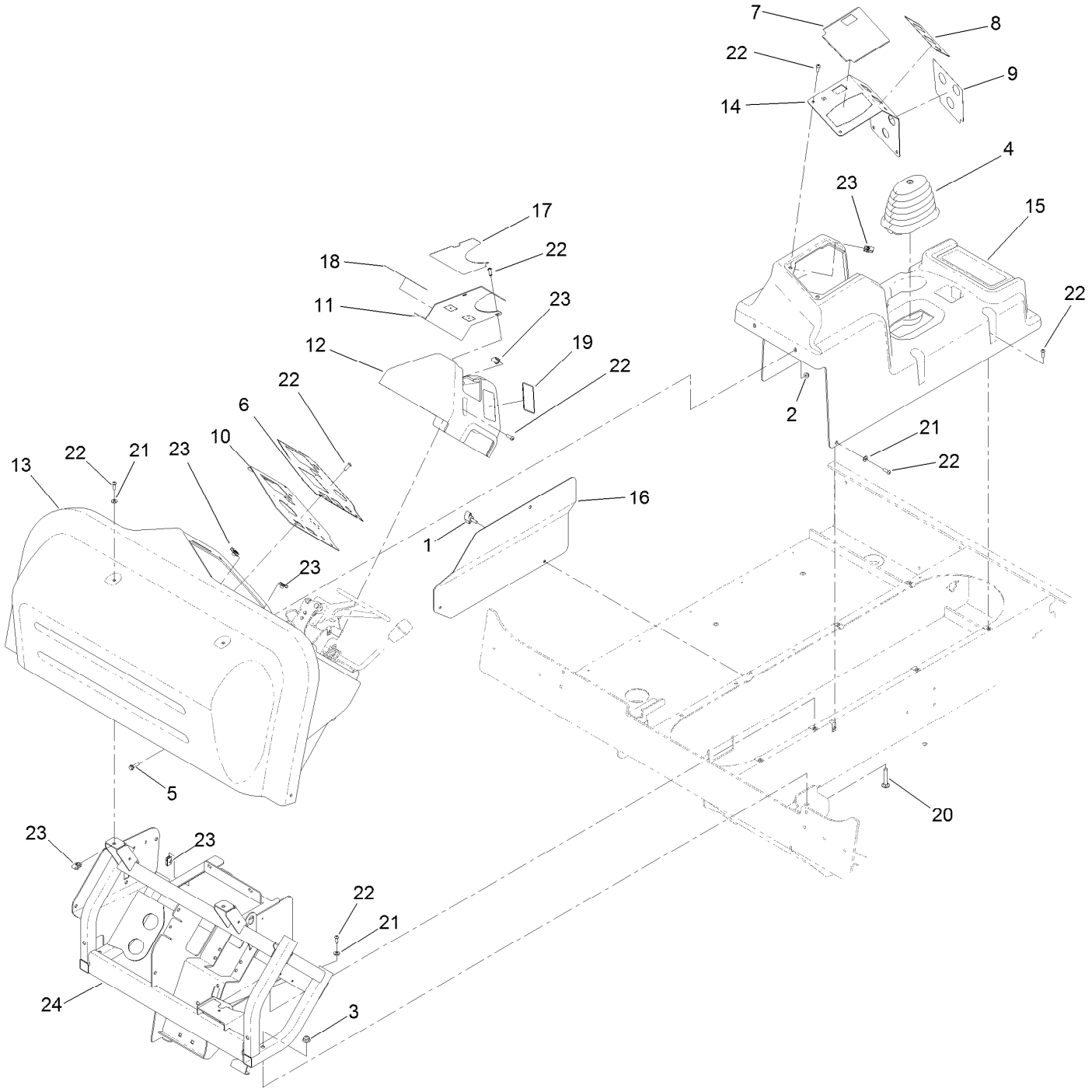

Panel Assembly (continued)

Ref.	Part Number	Qty.	Description
1	98-8332	3	Knob
2	104-7201	2	Nut-HF, NI
3	104-8301	2	Nut-HF, NI
4	117-8063	1	Boot-Shift
5	120-4654	2	Screw-HHF
6	136-5023	1	Decal-Panel, Control
7	136-5024	1	Decal-Console, Upper
8	136-5025	1	Decal-Console, Mid
9	136-5026	1	Decal-Console, Lower
10	136-9619-03	1	Panel-Control
11	136-9627-03	1	Panel-Steer
12	136-9628	1	Cover-Steer
13	136-9634	1	Dash-Molded
14	136-9635-03	1	Plate-Console
15	136-9636	1	Console
16	136-9776-03	1	Panel-Service
17	136-9866	1	Decal-Console
18	136-9867	1	Decal-Console
19	138-2017	1	Decal-Shifter
20	3231-6	2	Screw-CARR
21	3256-1	5	Washer-Flat
22	3274-69	21	Screw-HSBH
23	107069	14	Clip
24	138-8260-03	1	Dash ASM

Steering Assembly

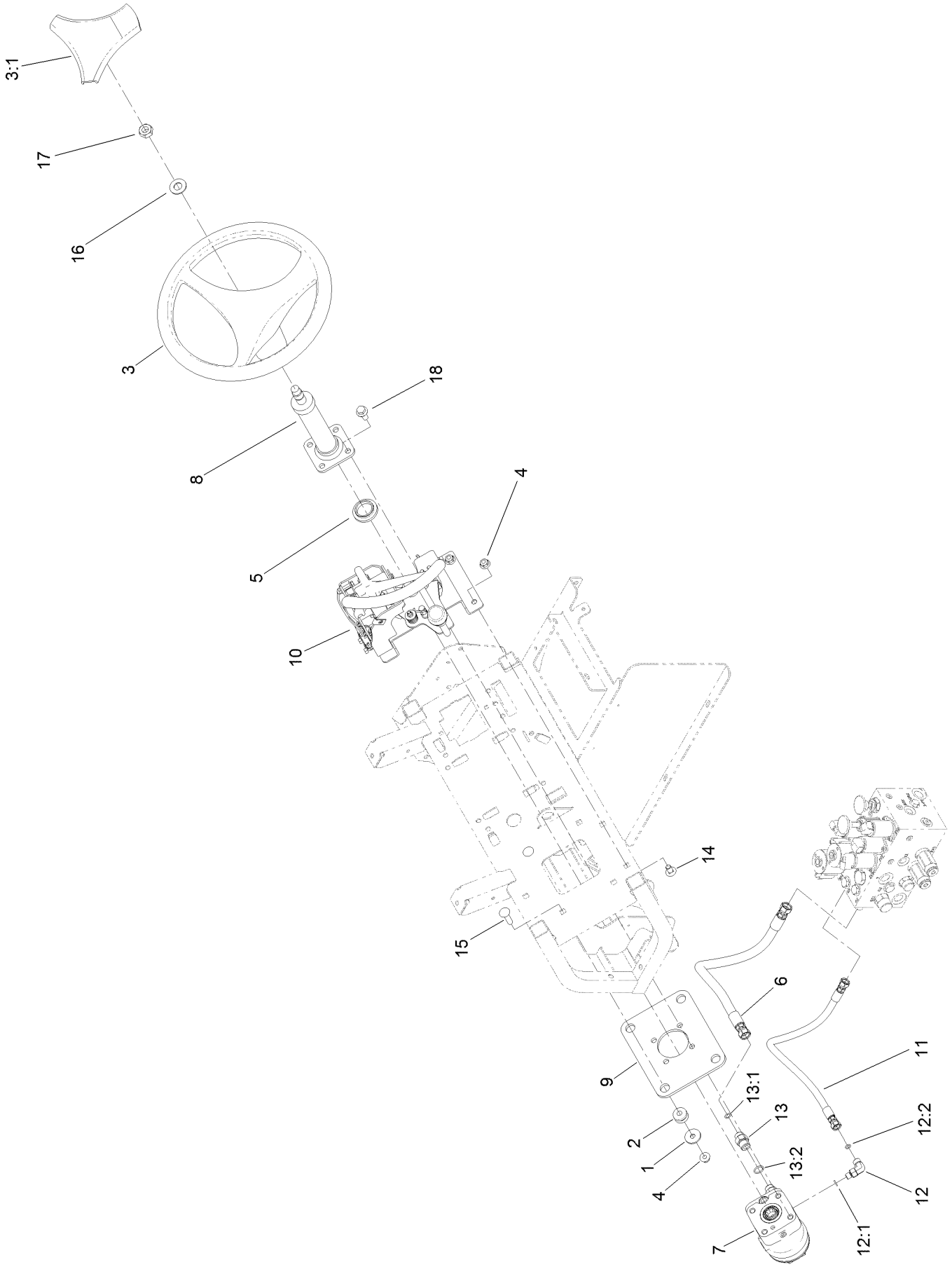

Steering Assembly (continued)

Ref.	Part Number	Qty.	Description
1	63-8410	4	Washer
2	63-9750	4	Mount
3	98-1471	1	Wheel-Steering
3:1	98-1468	1	Cover-Wheel, Steering
4	104-8301	7	Nut-HF, NI
5	140-0553	1	Bushing-Alignment
6	119-1433	1	Hose ASM
7	131-5626	1	Valve-Steering
8	132-6319	1	Column-Steer
9	133-7895-03	1	Plate-Steering
10		1	Paddle Shift ASM ●
11	136-9713	1	Hose ASM
12	340-132	1	Fitting-Elbow, 90 DEG
12:1	237-78	1	O-Ring
12:2	237-21	1	O-Ring
13	340-3	4	Fitting-Straight
13:1	237-22	1	O-Ring
13:2	237-79	1	O-Ring
14	3231-21	3	Screw-CARR
15	3231-26	4	Screw-CARR
16	3256-27	1	Washer-Flat
17	3296-33	1	Nut-Lock, NI
18	33105-025	4	Screw-HHF

● Not serviced separately

Steering Valve Assembly No. 131-5626

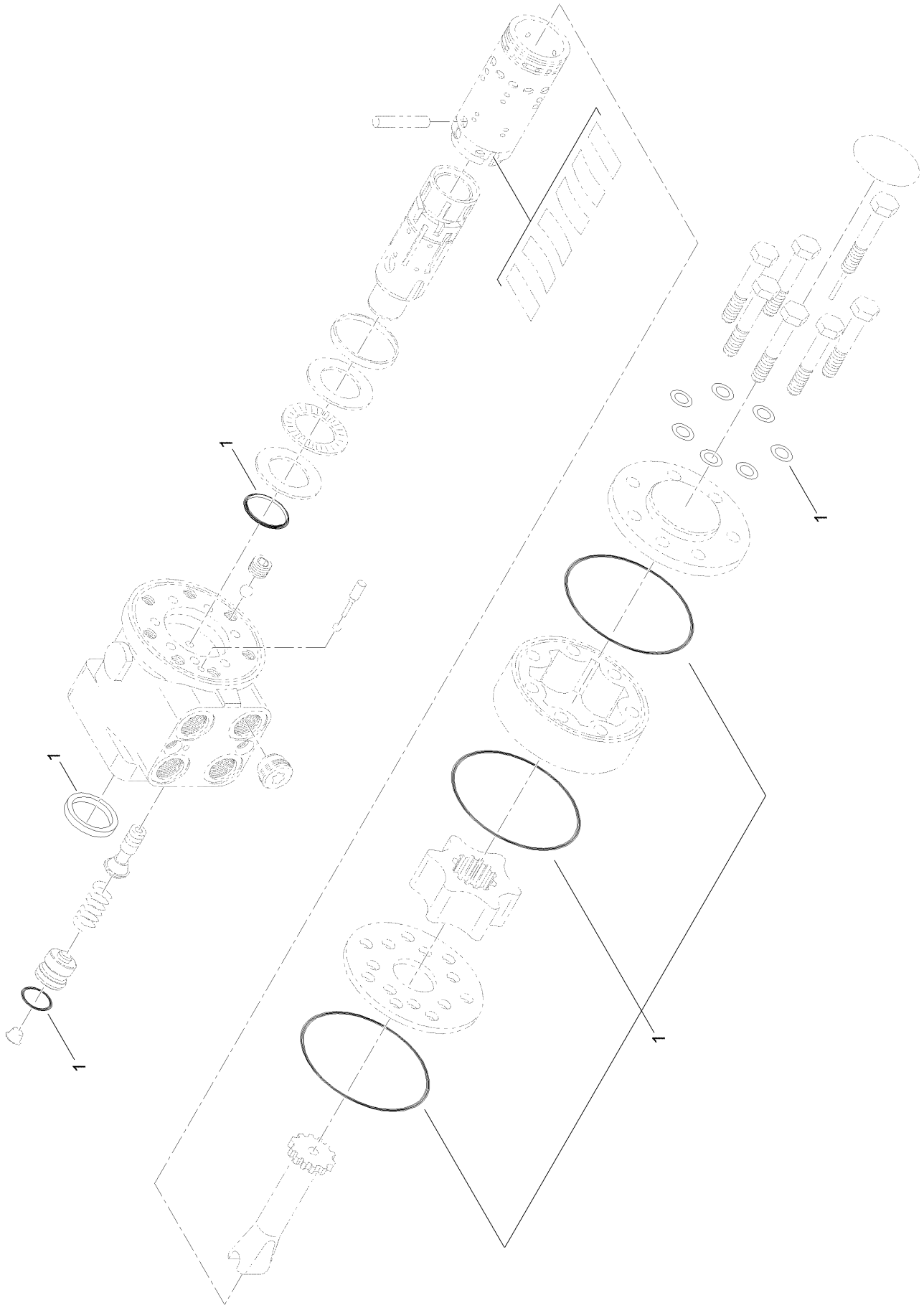

Steering Valve Assembly No. 131-5626 (continued)

Ref.	Part Number	Qty.	Description
1	138-7822	1	Seal And O-Ring Kit

Paddle Shift Assembly

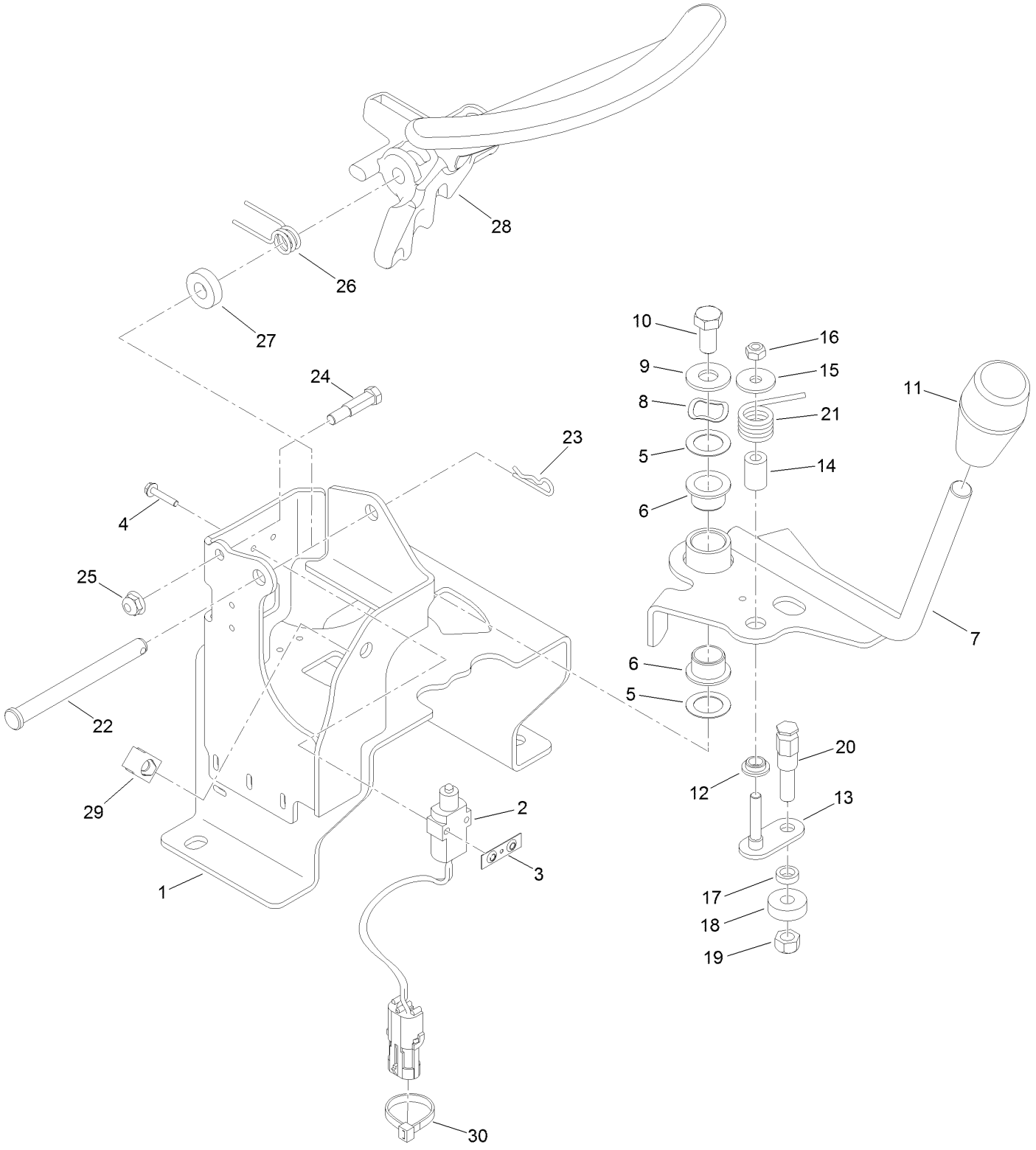

Paddle Shift Assembly (continued)

Ref.	Part Number	Qty.	Description
1	136-9644-03	1	Control
2	99-3410	4	Switch
3	108-9824	4	Nut-Switch
4	117-5458	8	Screw-HHF
5	7-4650	2	Washer-Plain
6	108-2973	2	Bushing-Flange
7	132-8178	1	Lever ASM
8	3290-317	1	Washer-Spring
9	3256-4	1	Washer-Flat
10	323-4	1	Screw-HH
11	131-8473	1	Knob-Tapered
12	94-9619	1	Bushing
13	120-3198	1	Roller-Pivot
14	94-9618	1	Spacer-Spring
15	3256-67	1	Washer
16	33023-00	1	Nut-Lock
17	82-4240	1	Spacer-Bearing
18	251-259	1	Bearing-Ball
19	33024-00	1	Nut-Lock, NI
20	94-9617	1	Pin-Spring
21	94-9620	1	Spring-Torsion
22	100-1413	1	Pin-Clevis
23	1-806003	1	Pin-Cotter
24	132-8187	1	Bolt-Shoulder
25	104-7201	1	Nut-HF, NI
26	131-6107	1	Spring-Torsion
27	5-0652	1	Spacer
28	132-8173	1	Paddle
29	107069	1	Clip
30	3290-378	4	Tie-Cable

Pedal Assembly

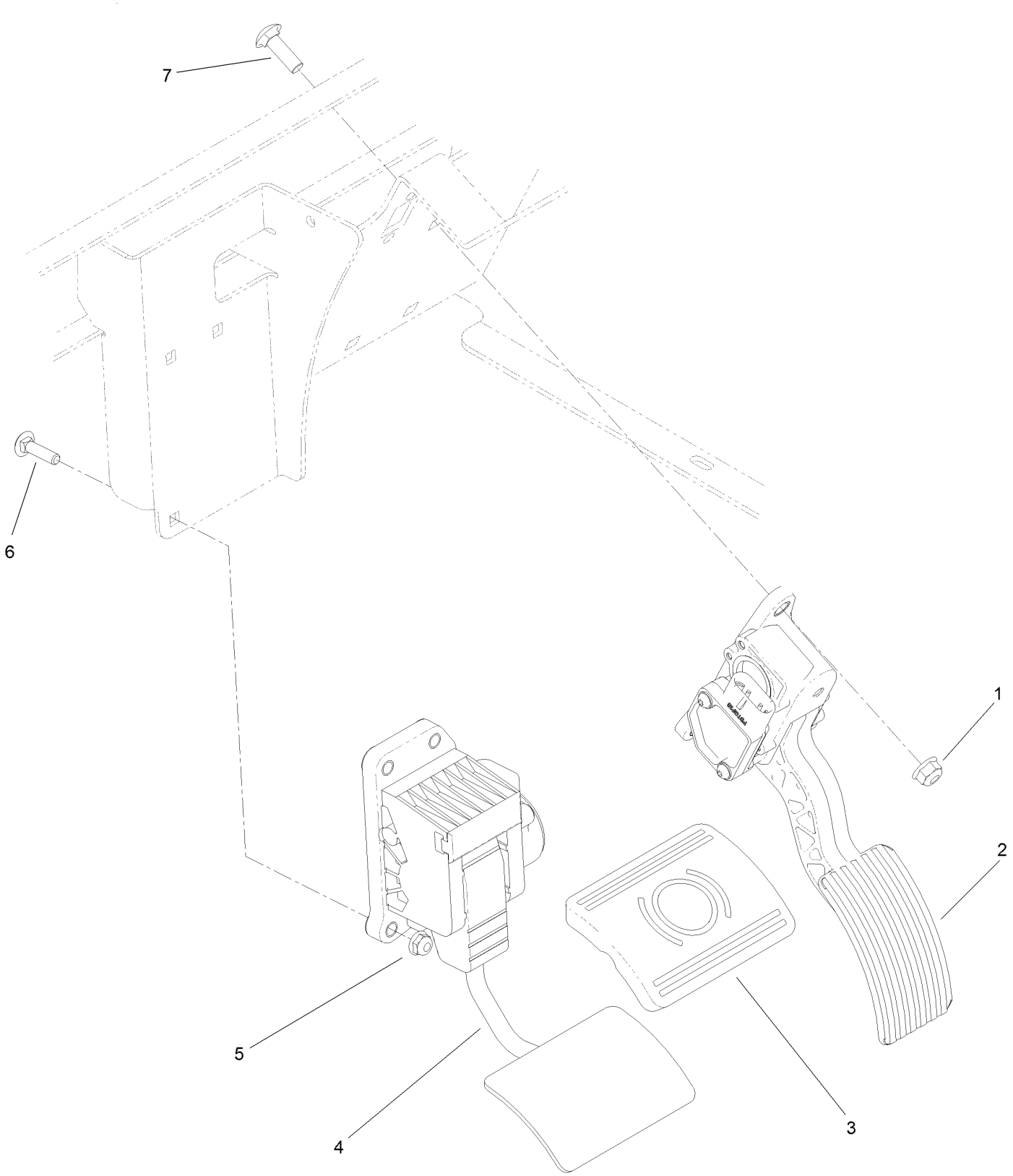

Pedal Assembly (continued)

Ref.	Part Number	Qty.	Description
1	104-8300	3	Nut-HF, NI
2	121-9675	1	Pedal-Accelerator
3	93-8742	1	Footpad-Brake
4	138-8270	1	Brake ASM
5	104-7201	3	Nut-HF, NI
6	3229-2	3	Screw-CARR
7	3230-22	3	Screw-CARR

Dash and Console Control Assembly

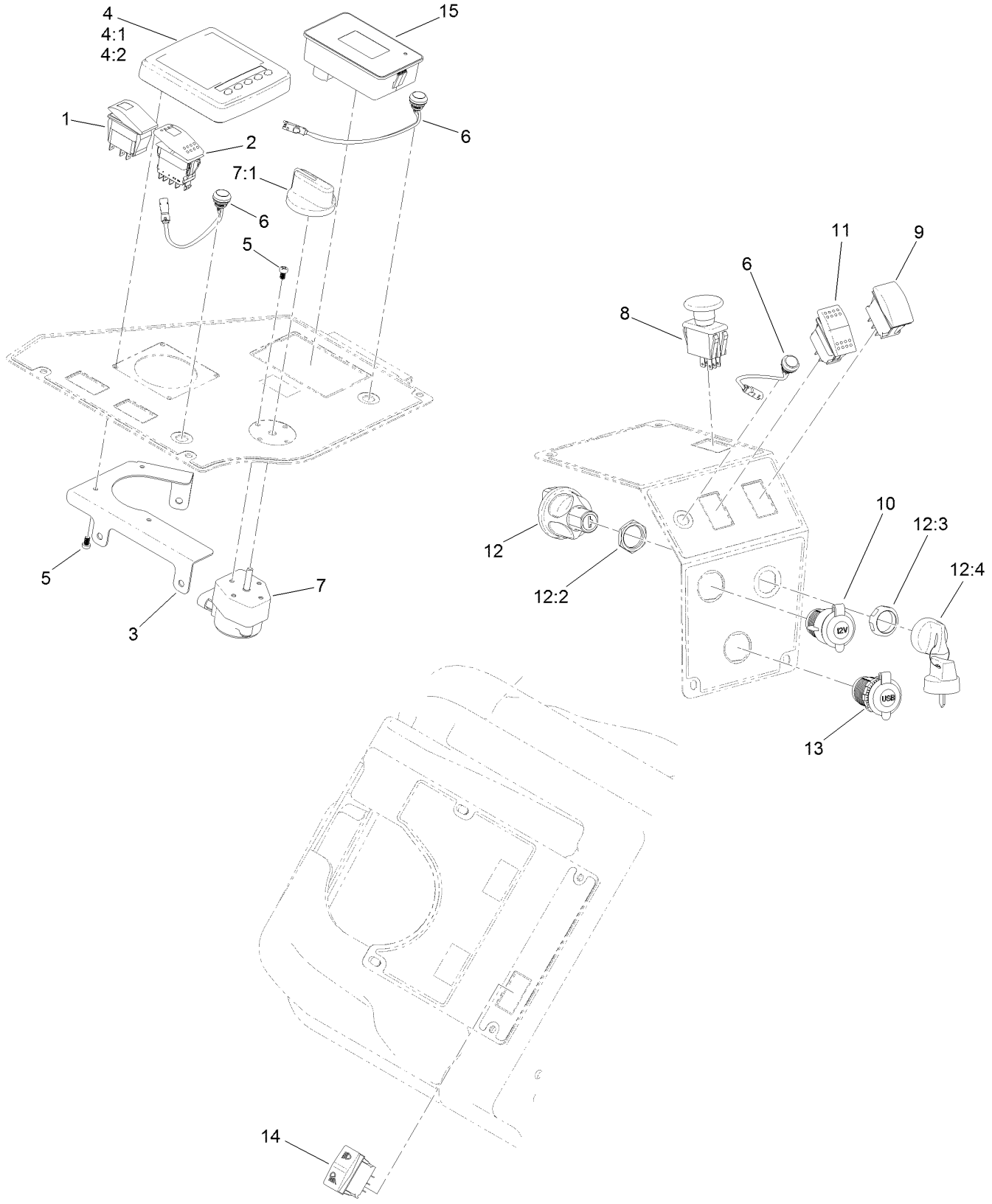

Dash and Console Control Assembly (continued)

Ref.	Part Number	Qty.	Description
1	105-4232	1	Switch
2	122-0938	1	Switch-Rocker
3	122-1109-03	1	Bracket-Panel, Wire
4	125-5320	1	Infocenter
4:1	115-8884	4	Nut-Thumb
4:2	115-8885	4	Stud
5	132-7668	8	Screw-PPH
6	136-9678	3	Switch-Pushbutton
7	122-1338	1	Switch-Rotary
7:1	122-1362	1	Knob
8	93-9999	1	Switch-PTO
9	100-1535	1	Switch-Rocker, (On)-Off-(On)
10	109-9376	1	Receptacle-12V
11	114-3329	1	Switch-Rocker
12	121-5159	1	Ignition Switch ASM
12:2	121-5160	1	Nut-Hex
12:3	121-5161	1	Nut-Face
12:4	121-5162	1	Set-Key, Ignition
13	131-8388	1	Socket-USB
14	120-0334	1	Switch-Rocker
15	122-1201	1	Module-Display

Dash Component Assembly

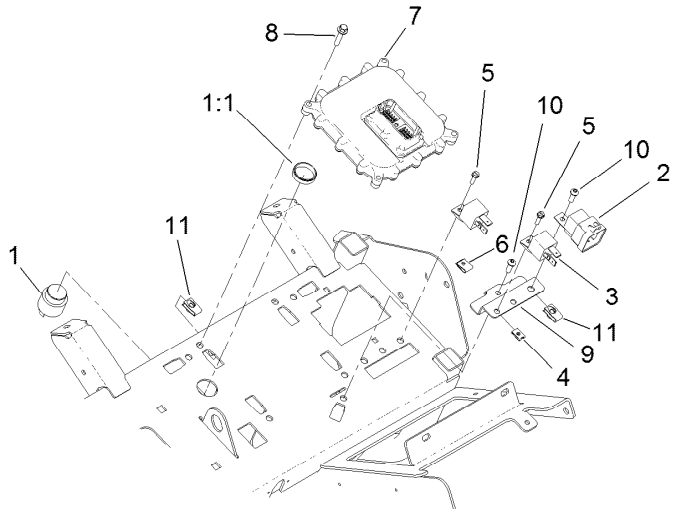

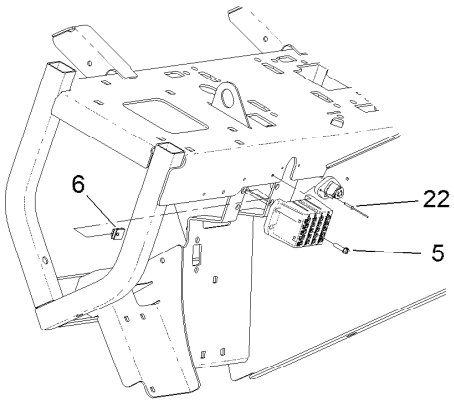

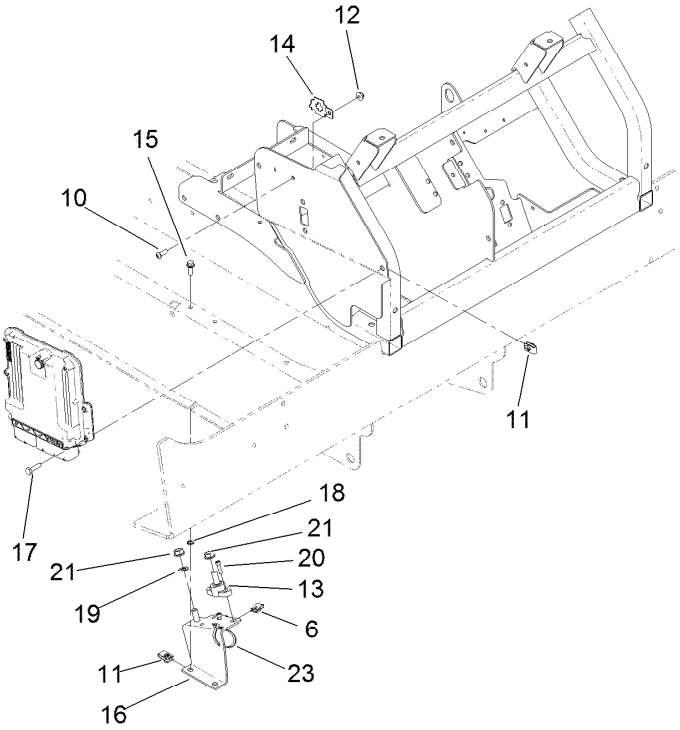

Dash Component Assembly (continued)

Ref.	Part Number	Qty.	Description
1	80-9330	1	Audio Alarm ASM
1:1	104-5107	1	Nut-Plastic, Knurled ●
2	99-7430	1	Relay-Mini
3	99-7435	5	Relay
4	107-1013	2	Nut-Speed
5	32105-13	9	Screw-HWH
6	120-6686	9	Nut-Clip, U
7	127-2770	1	Controller
8	127-8639	4	Screw-HHF
9	136-9654	1	Bracket-Fuse, Engine
10	3274-69	3	Screw-HSBH
11	107069	11	Clip
12	104-7201	1	Nut-HF, NI
13	110-8822	1	Block-Junction
14	114-5502	1	Clip-Fuse
15	115-5103	2	Screw-HHF
16	138-8144-03	1	Bracket-Terminal
17	321-6	3	Screw-HH
18	3255-7	2	Washer-Lock/EXT
19	3255-9	1	Washer-Lock
20	3274-14	2	Screw-HSH
21	3290-357	2	Nut-HHF, Whiz
22	136-9679	2	Rivet-Tiny
23	3290-378	1	Tie-Cable

● Not illustrated

Engine Assembly

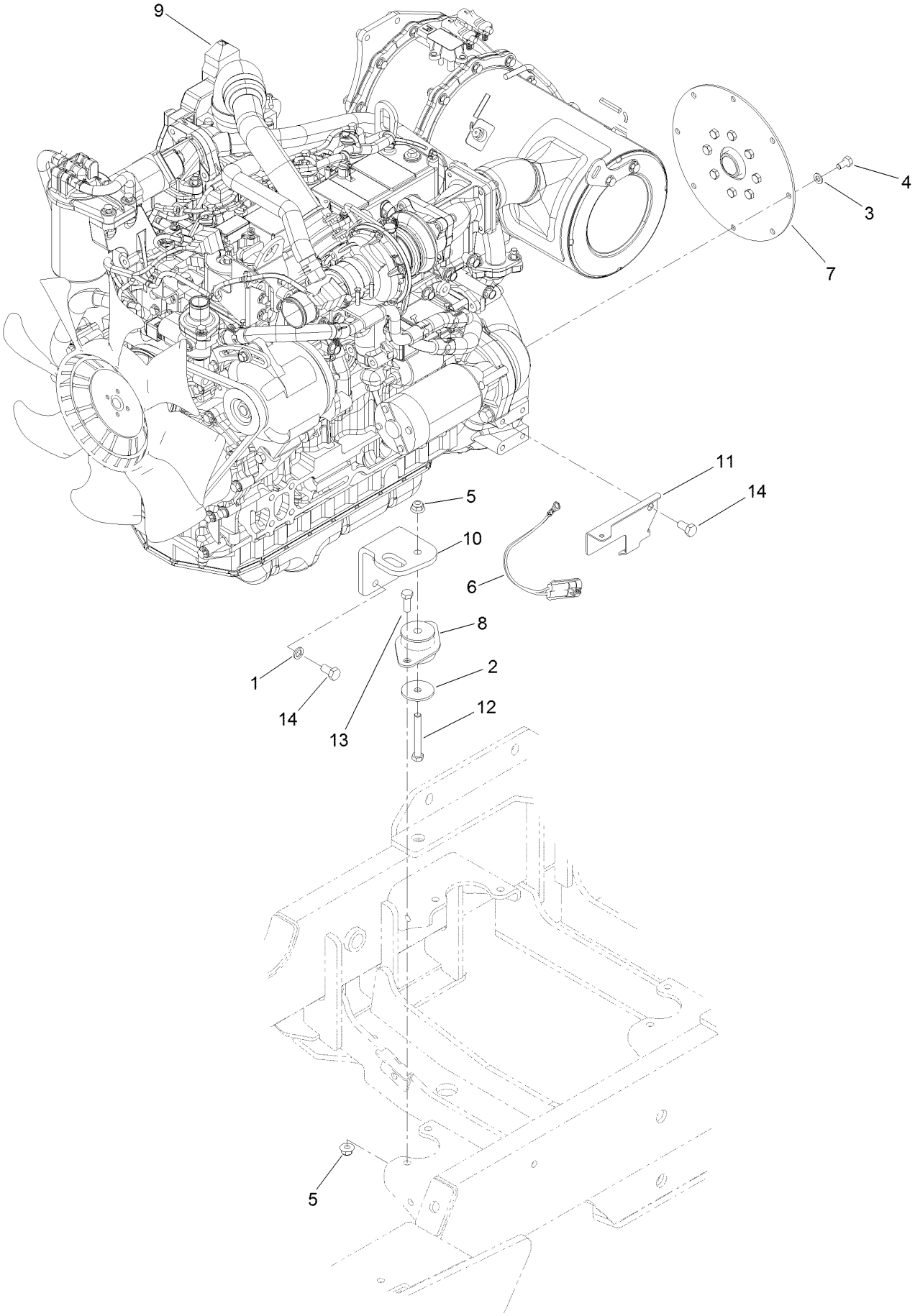

Engine Assembly (continued)

Ref.	Part Number	Qty.	Description
1	48-9590	4	Washer-Lock
2	63-7400	1	Washer-Rebound
3	87-7510	8	Washer-Flat
4	99-5132	8	Bolt
5	104-8301	3	Nut-HF, NI
6	108-9470	1	Harness-Wire, Fusible Link
7	120-4176	1	Coupling-Spring, Flywheel
8	131-1821	1	Mount-Engine
9	138-8198	1	Engine-Yanmar
10	132-6304-03	1	Bracket-Engine
11	133-7894	1	Bracket-Wire, LH
12	323-13	1	Screw-HH
13	323-6	2	Screw-HH
14	33115-020	5	Screw-HH

Exhaust and Bracket Assembly

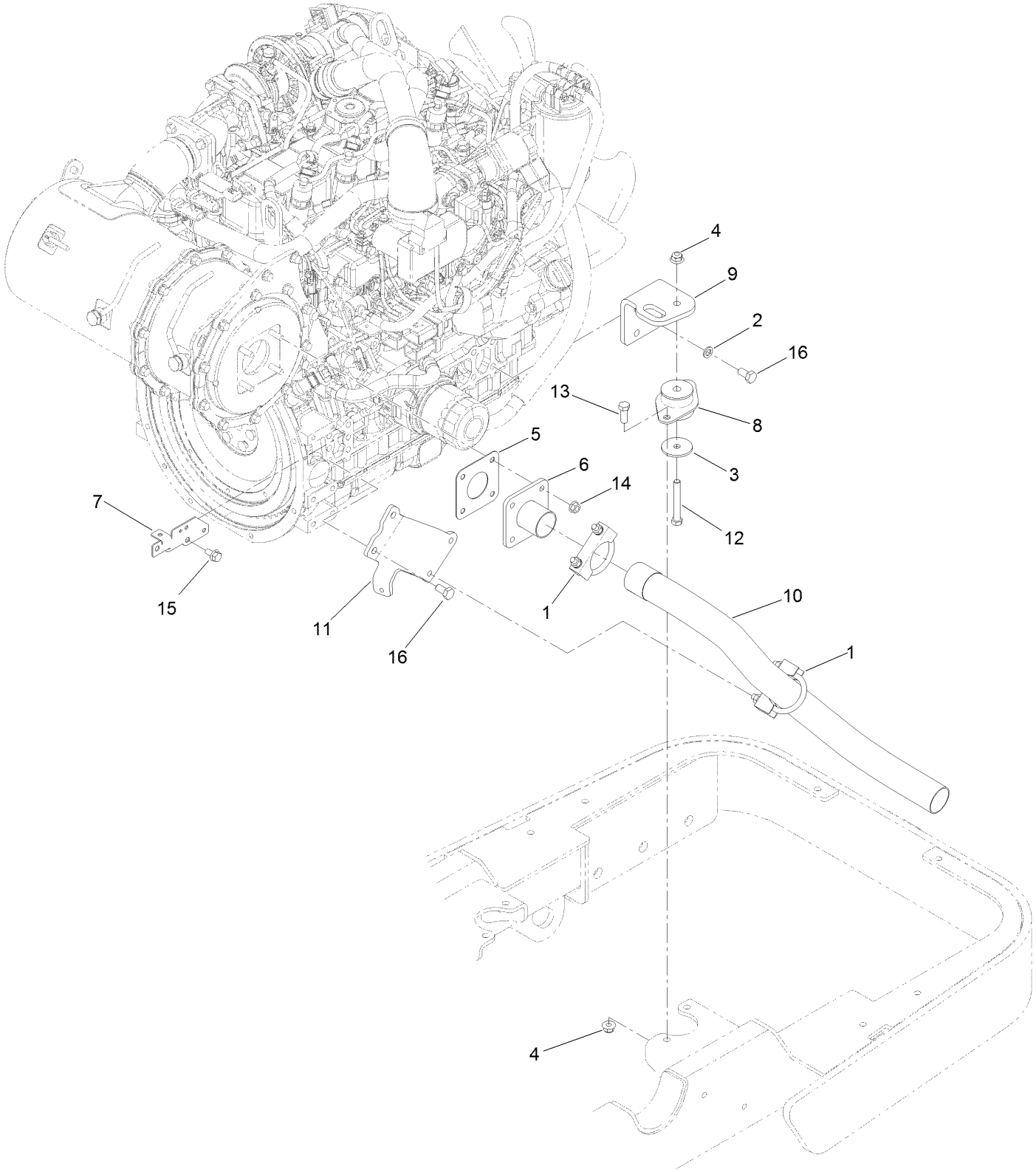

Exhaust and Bracket Assembly (continued)

Ref.	Part Number	Qty.	Description
1	18-2130	2	Clamp
2	48-9590	4	Washer-Lock
3	63-7400	1	Washer-Rebound
4	104-8301	3	Nut-HF, NI
5	121-3058	1	Gasket-Exhaust
6	121-3060	1	Flange-Exhaust
7	122-0940	1	Bracket-Harness, Engine
8	131-1821	1	Mount-Engine
9	132-6304-03	1	Bracket-Engine
10	133-7870	1	Tube-Exhaust
11	133-7893-03	1	Bracket-Exhaust
12	323-13	1	Screw-HH
13	323-6	2	Screw-HH
14	33004-00	4	Nut-HF
15	33104-016	1	Screw-HHF
16	33115-020	6	Screw-HH

Screen and Support Assembly

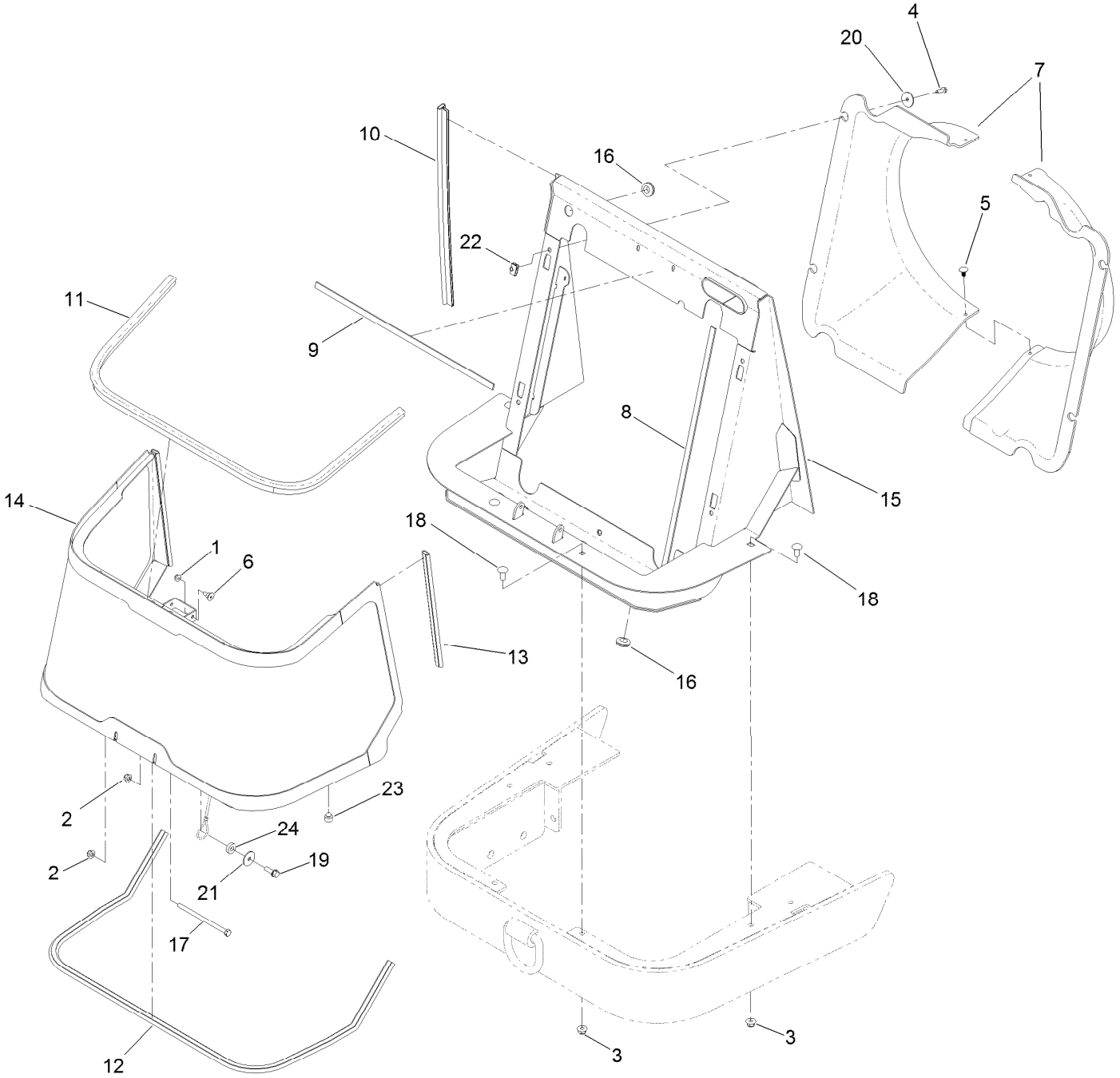

Screen and Support Assembly (continued)

Ref.	Part Number	Qty.	Description
1	104-7201	1	Nut-HF, NI
2	104-8300	2	Nut-HF, NI
3	104-8301	4	Nut-HF, NI
4	115-5103	4	Screw-HHF
5	117-2382	2	Plug-Plastic
6	125-1122	1	Screw
7	136-5166	1	Fan Shroud ASM
8	136-9862	2	Seal-Foam
9	136-9865	2	Seal-Foam
10	138-2025	2	Seal-Bulb
11	138-2026	1	Seal-Bulb
12	138-2027	1	Seal-Bulb
13	138-2028	2	Seal-Bulb
14	138-2030-03	1	Screen
15	138-4175-01	1	Mount-Cooling
16	237-124	3	Grommet
17	322-49	1	Bolt-HH
18	3231-27	4	Screw-CARR
19	3234-29	1	Screw-HHF
20	3256-55	4	Washer-Flat
21	3256-57	1	Washer-Flat
22	107069	4	Clip
23	107-8042	2	Bumper-Rubber
24	5-0652	1	Spacer

Radiator Assembly

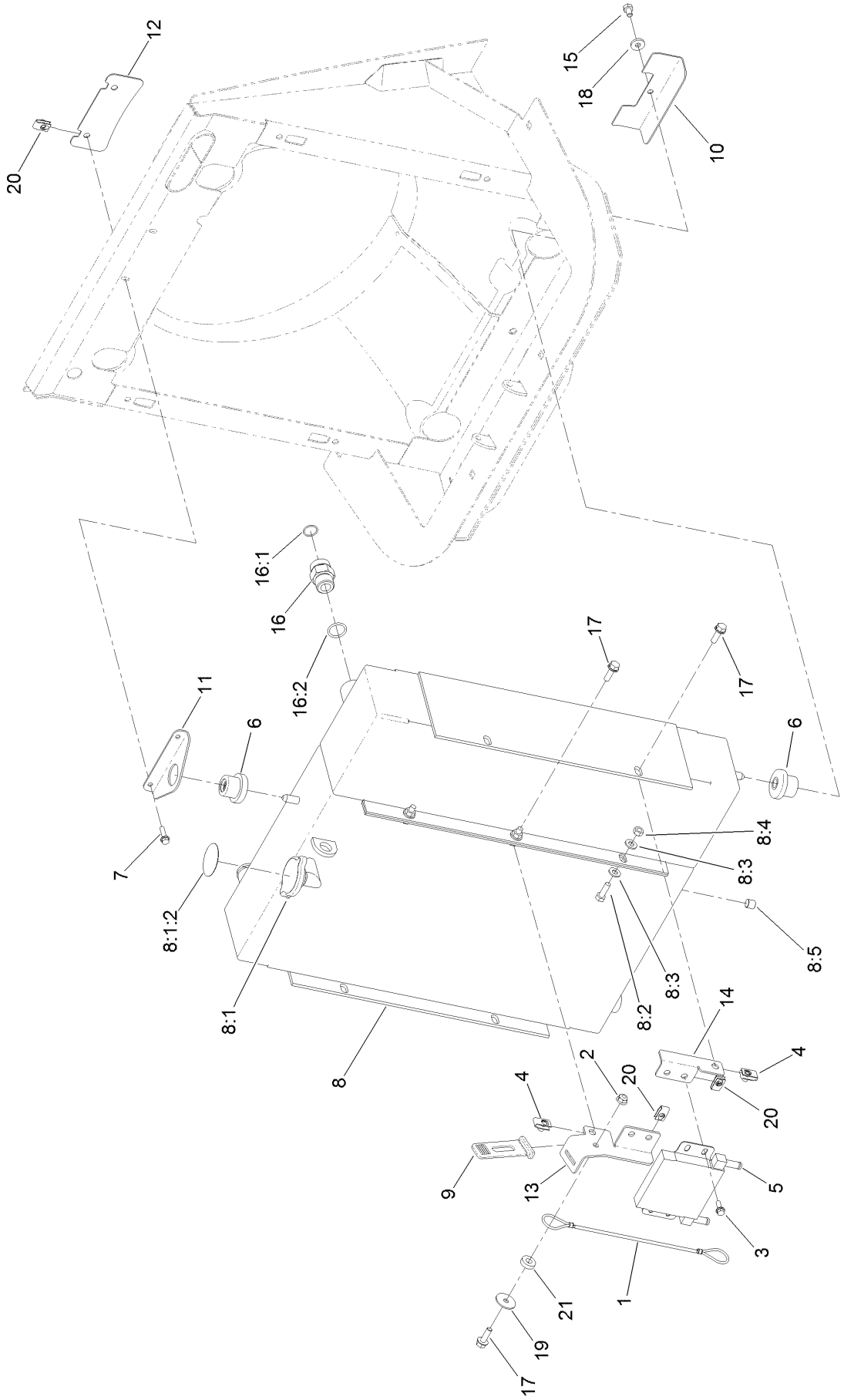

Radiator Assembly (continued)

Ref.	Part Number	Qty.	Description
1	93-9595	1	Lanyard
2	104-8300	1	Nut-HF, NI
3	115-5103	4	Screw-HHF
4	94-2413	2	Nut-U
5	116-7205	1	Cooler
6	119-1422	3	Mount-Isolator
7	120-4654	2	Screw-HHF
8	131-5630	1	Radiator Cooler ASM
8:1	119-1430	1	Radiator Cap ASM
8:1:2	117-3276	1	Decal-Danger
8:2	33114-025	6	Screw-HH
8:3	33094-00	12	Washer-Plain
8:4	33014-00	6	Nut-Hex
8:5	99-8551	1	Plug-Pipe
9	131-8402	1	Strap-Down, Hold

Ref.	Part Number	Qty.	Description
10	138-1855	1	Bracket-Clamp
11	138-2029	1	Bracket-Clamp
12	138-2049	1	Plate-Clamp
13	138-3750	1	Bracket-Cooler, RH
14	138-3751	1	Bracket-Cooler, LH
15	322-1	1	Screw-HH
16	340-9	2	Fitting-STR
16:1	237-58	1	O-Ring
16:2	237-81	1	O-Ring
17	3234-29	3	Screw-HHF
18	88-7200	1	Washer-Flat
19	3256-57	1	Washer-Flat
20	107069	6	Clip
21	5-0652	1	Spacer

Engine Cooling and Hose Assembly

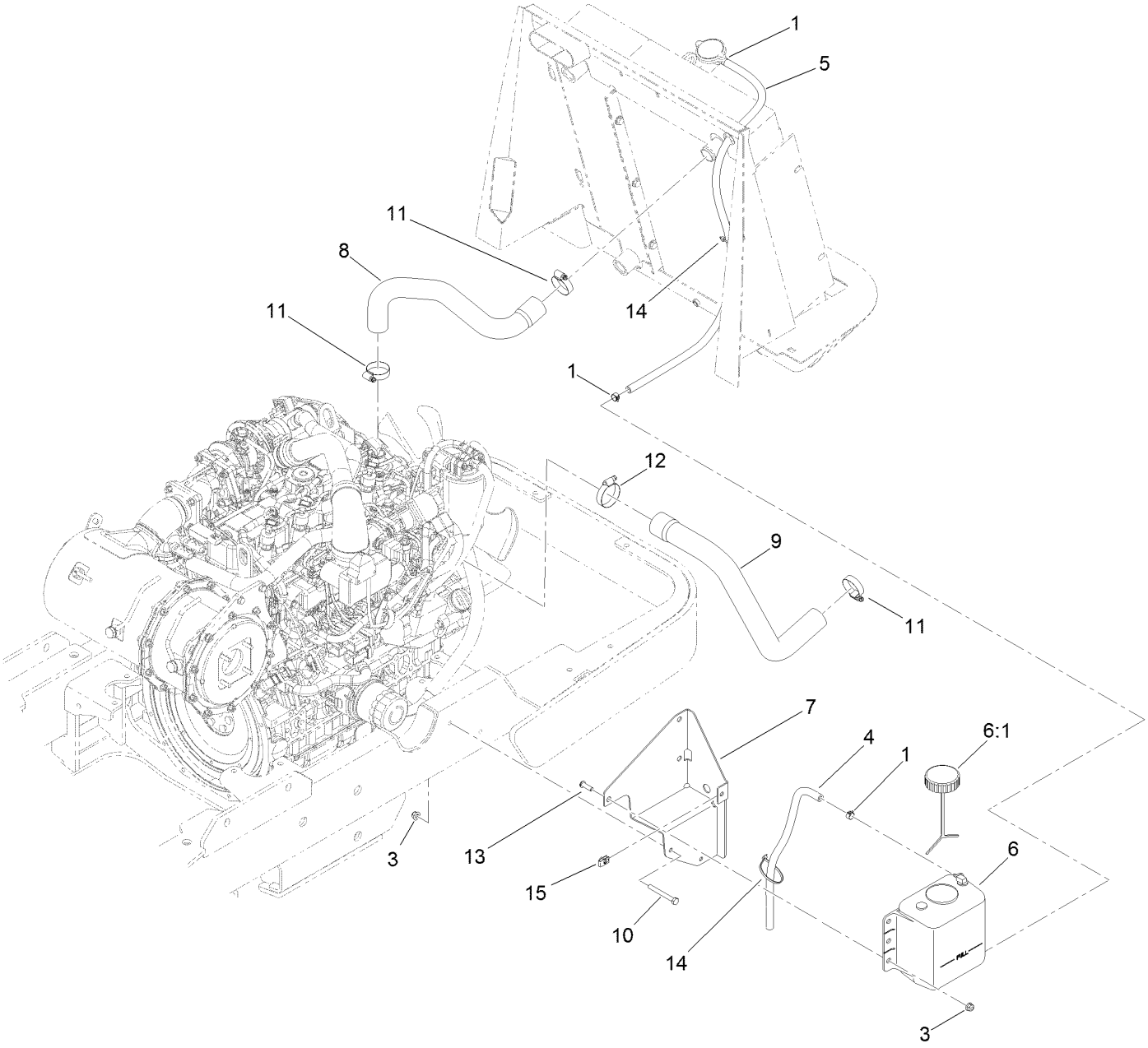

Engine Cooling and Hose Assembly (continued)

Ref.	Part Number	Qty.	Description
1	92-2379	3	Clamp-Hose
3	104-8300	5	Nut-HF, NI
4	110-4109	1	Hose-Fuel
5	110-4114	1	Hose-Fuel
6	120-5571	1	Coolant Reservoir ASM
6:1	87-7050	1	Cap-Reservoir
7	136-5171-01	1	Bracket-Bottle
8	136-5178	1	Hose-Coolant, Upper
9	136-5179	1	Hose-Coolant, Lower
10	322-13	2	Screw-HH
11	2412-111	3	Clamp-Hose, W/Liner
12	2412-3	1	Clamp-Hose
13	3274-104	3	Screw-HSBH
14	3290-378	2	Tie-Cable
15	107069	1	Clip

Transmission, Gearbox and Gear Pump Assembly

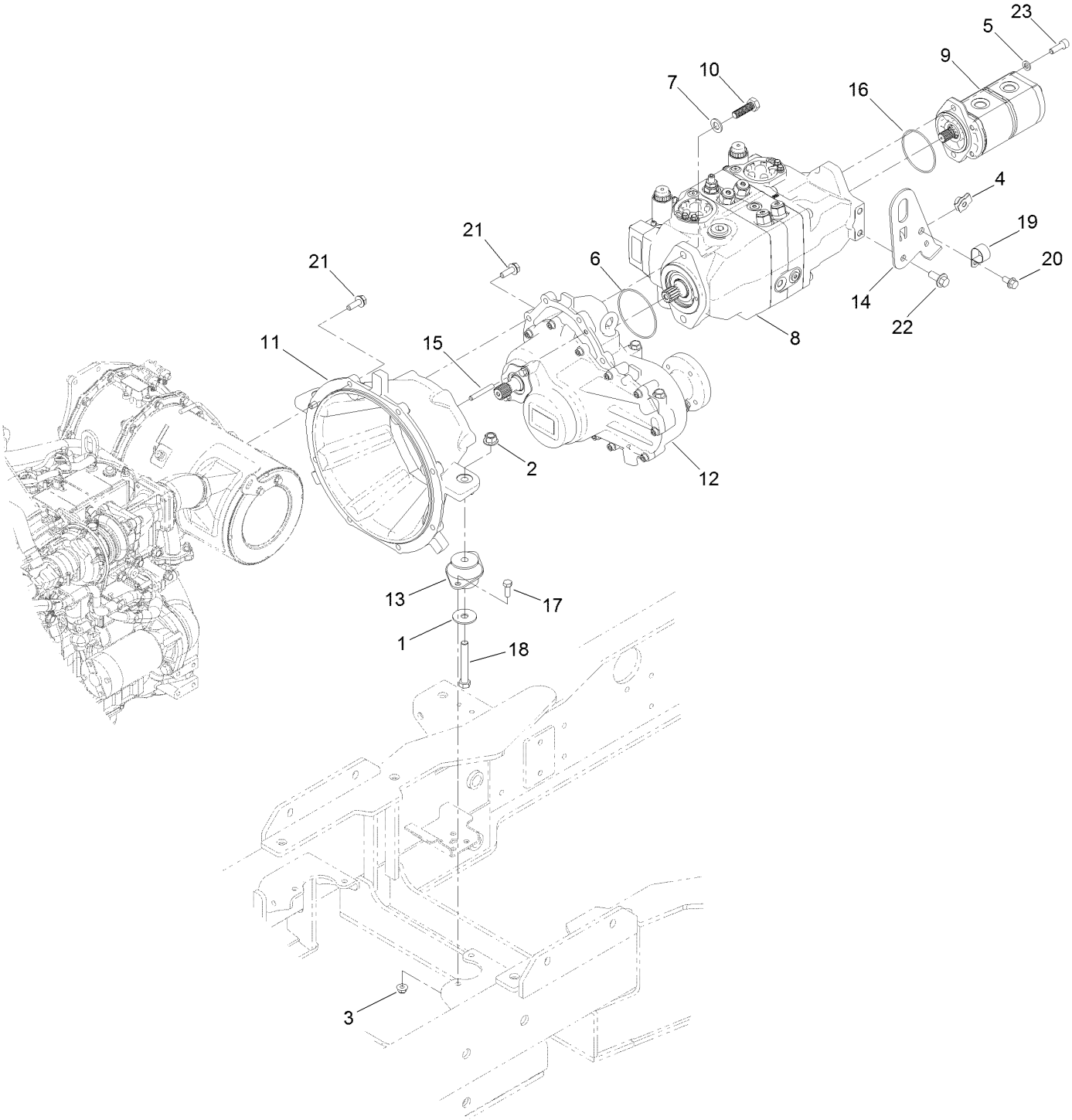

Transmission, Gearbox and Gear Pump Assembly (continued)

Ref.	Part Number	Qty.	Description
1	86-1990	2	Washer-Thrust
2	99-5107	2	Nut-Lock
3	104-8301	4	Nut-HF, NI
4	105-4886	1	Nut-Tinnerman
5	107-1413	2	Washer-Hardened
6	107-9447	1	O-Ring
7	115-7144	2	Washer-Flat
8	131-5625	1	Hydraulic Tandem Pump ASM
9	131-5632	1	Dual Gear Pump ASM
10	AU615-14045	2	Screw-HH
11	132-8195	1	Housing-Flywheel
12	138-4083	1	Gearbox ASM
13	133-7877	2	Mount-Engine
14	133-7910-03	1	Plate-Hanger, Pump
15	136-5260	2	Pin-Dowel
16	237-161	1	O-Ring
17	323-6	4	Screw-HH
18	325-14	2	Screw-HH
19	2412-126	1	R-Clamp
20	3234-1	1	Screw-HHF
21	33105-030	15	Screw-HHF
22	33106-020	1	Screw-HHF
23	AU862-10030	2	Screw-HSH

Hydraulic Tandem Pump Assembly No. 131-5625

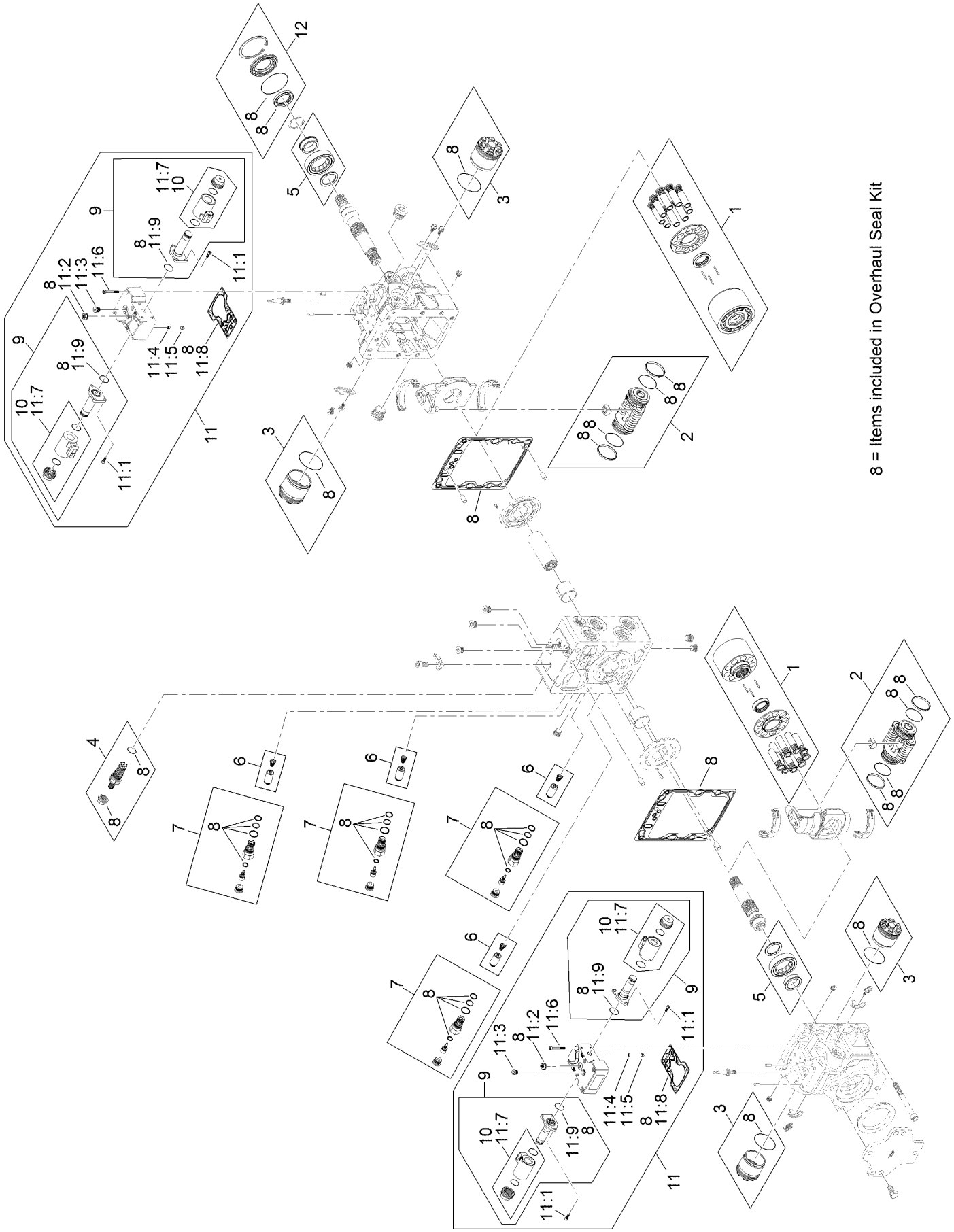

Hydraulic Tandem Pump Assembly No. 131-5625 (continued)

Ref.	Part Number	Qty.	Description
1	121-1723	2	Cylinder Block Kit
2	121-1725	2	Servo Piston ASM
3	136-4996	4	Servo Cylinder ASM
4	136-8296	1	Charge Relief Valve Kit
5	125-5279	1	Bearing-Roller
6	138-7864	4	S C R Valve ASM
7	138-7865	4	S C R Valve Plug ASM
8	136-8295	1	Overhaul Seal Kit
9	138-7866	4	Valve-Solenoid
10	125-5294	4	Coil Kit
11	125-5295	2	Control Kit (12 Volt)

Ref.	Part Number	Qty.	Description
11:1	125-5272	6	Screw
11:2	125-5273	1	Nut-Seal
11:3	125-5302	1	Plug
11:4	125-5266	1	Screen
11:5	125-5269	1	Ring-Locking
11:6	125-5274	6	Screw
11:7	125-5294	2	Coil Kit
11:8	125-5283	1	Gasket-Control
11:9	125-5288	2	O-Ring
12	121-1729	1	Shaft Seal Kit

Hydraulic Gear Pump Assembly No. 131-5632

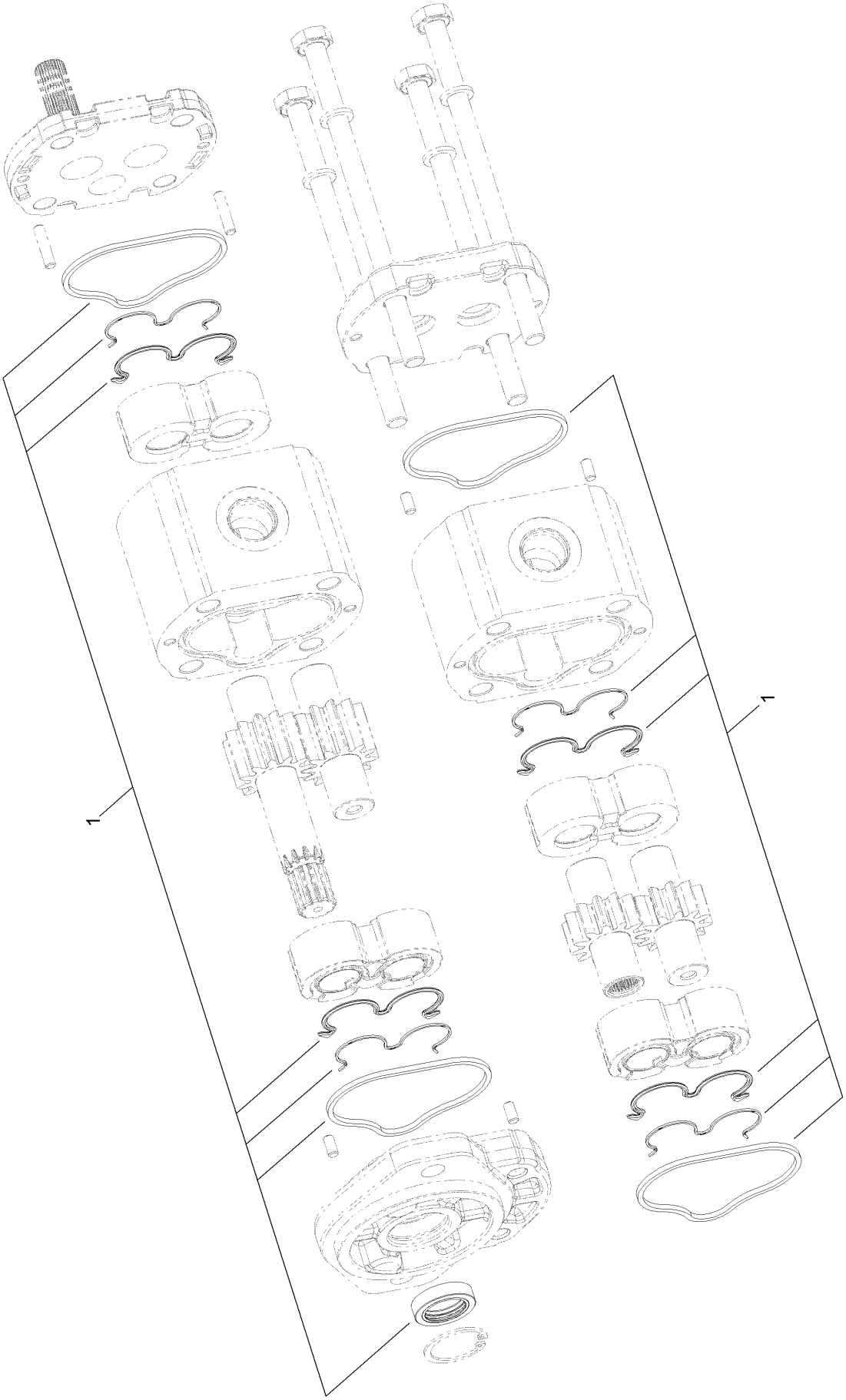

Hydraulic Gear Pump Assembly No. 131-5632 (continued)

Ref.	Part Number	Qty.	Description
1	138-7818	1	Seal Kit

Gearbox Assembly No. 138-4083

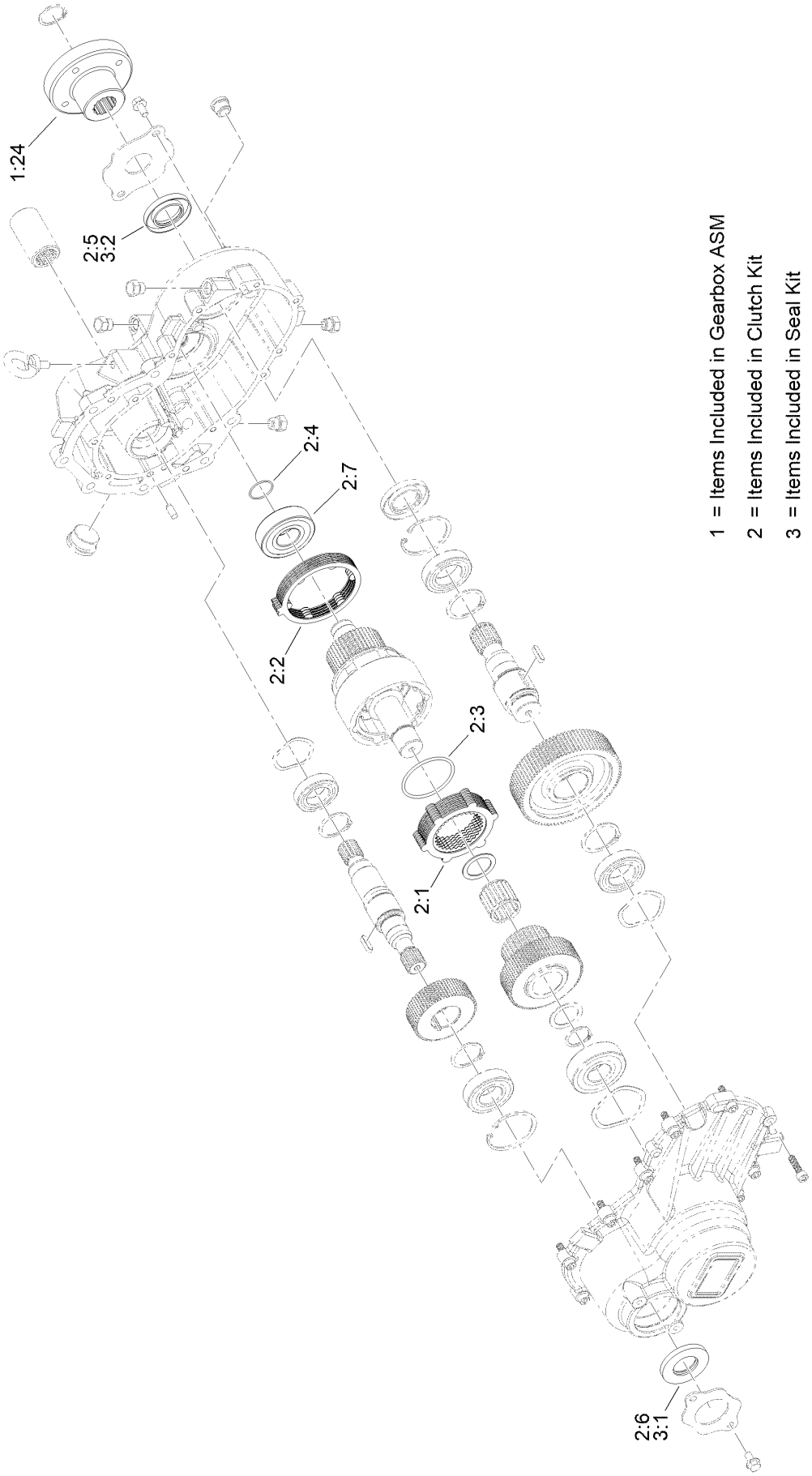

1 = Items Included in Gearbox ASM

2 = Items Included in Clutch Kit

3 = Items Included in Seal Kit

Gearbox Assembly No. 138-4083 (continued)

Ref.	Part Number	Qty.	Description
1	133-4750	1	Gearbox ASM
1:24	136-9555	1	Hub-Driveshaft
2	136-5280	1	Clutch Kit
2:1	136-5285	1	Clutch Pack ASM
2:2	136-5286	1	Brake Pack ASM
2:3	237-173	1	O-Ring
2:4	132-7837	1	O-Ring
2:5	131-5584	1	Seal-Oil
2:6	133-4775	1	Seal-Oil
2:7	131-5582	1	Bearing-Ball
3	136-5281	1	Seal Kit
3:1	133-4775	1	Seal-Oil
3:2	131-5584	1	Seal-Oil

Transmission, Gearbox and Gear Pump Fitting Assembly

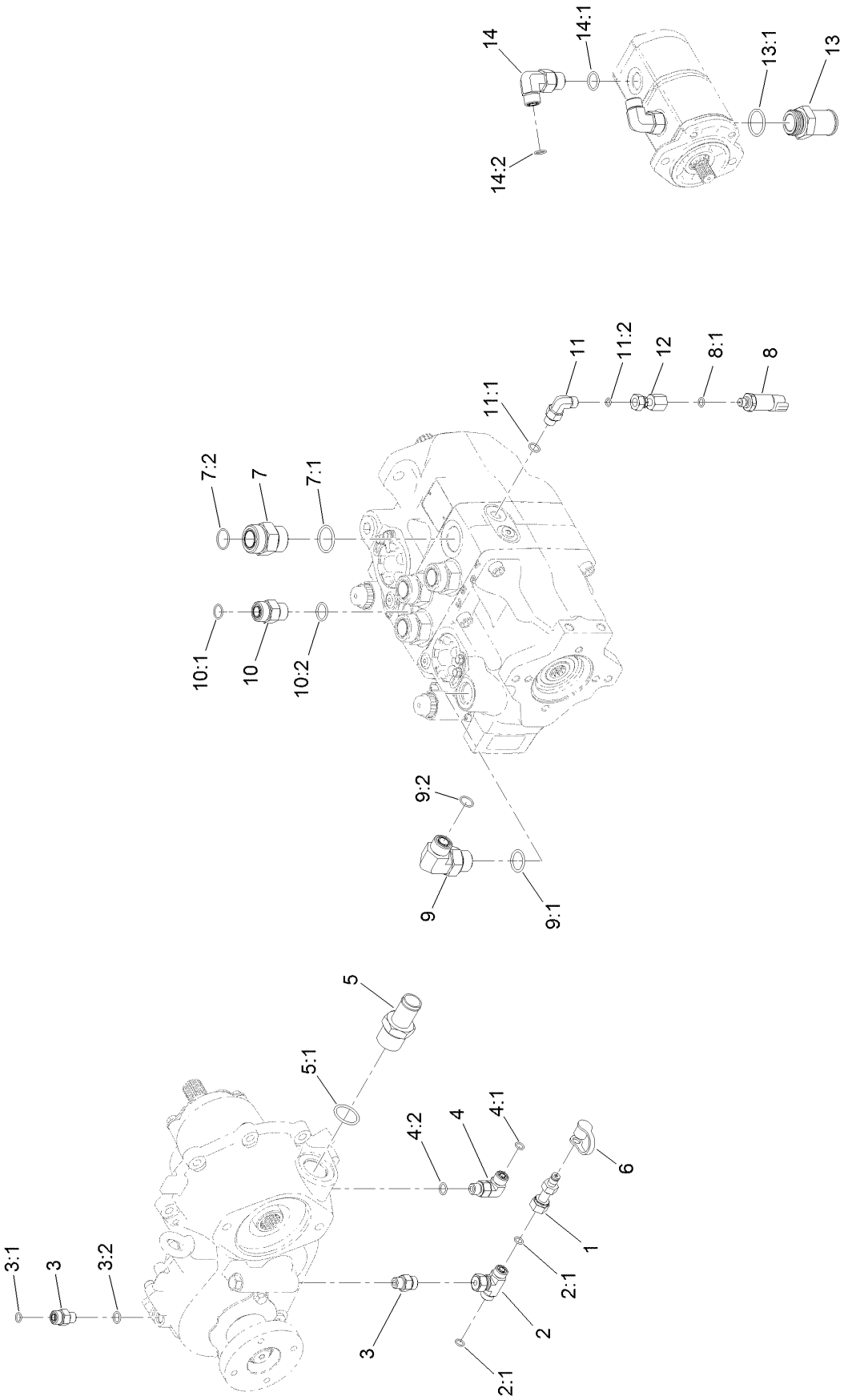

Transmission, Gearbox and Gear Pump Fitting Assembly (continued)

Ref.	Part Number	Qty.	Description
1	86-5480	1	Nipple-Test
2	340-166	1	Fitting-Tee
2:1	237-22	2	O-Ring
3	340-2	2	Fitting-Straight
3:1	237-22	1	O-Ring
3:2	237-42	1	O-Ring
4	340-77	1	Fitting-Elbow, 90 DEG
4:1	237-22	1	O-Ring
4:2	237-42	1	O-Ring
5	354-78	1	Fitting-STR
5:1	237-146	1	O-Ring
6	354-79	1	Cap-Dust
7	104-3797	4	Fitting-Straight
7:1	237-146	1	O-Ring
7:2	340-65	1	O-Ring
8	119-0011	2	Pressure Transducer ASM
8:1	237-78	1	O-Ring
9	340-139	1	Fitting-Elbow 90
9:1	237-81	1	O-Ring
9:2	237-65	1	O-Ring
10	340-7	1	Fitting-Straight
10:1	237-65	1	O-Ring
10:2	237-80	1	O-Ring
11	340-82	2	Fitting-Elbow, 90 DEG
11:1	237-42	1	O-Ring
11:2	237-21	1	O-Ring
12	AU8SA60404	2	Fitting-Straight
13	125-1528	1	Fitting-STR
13:1	237-146	1	O-Ring
14	340-105	2	Fitting-Elbow, 90 DEG
14:1	237-80	1	O-Ring
14:2	237-30	1	O-Ring

Driveshaft and Gearbox Assembly

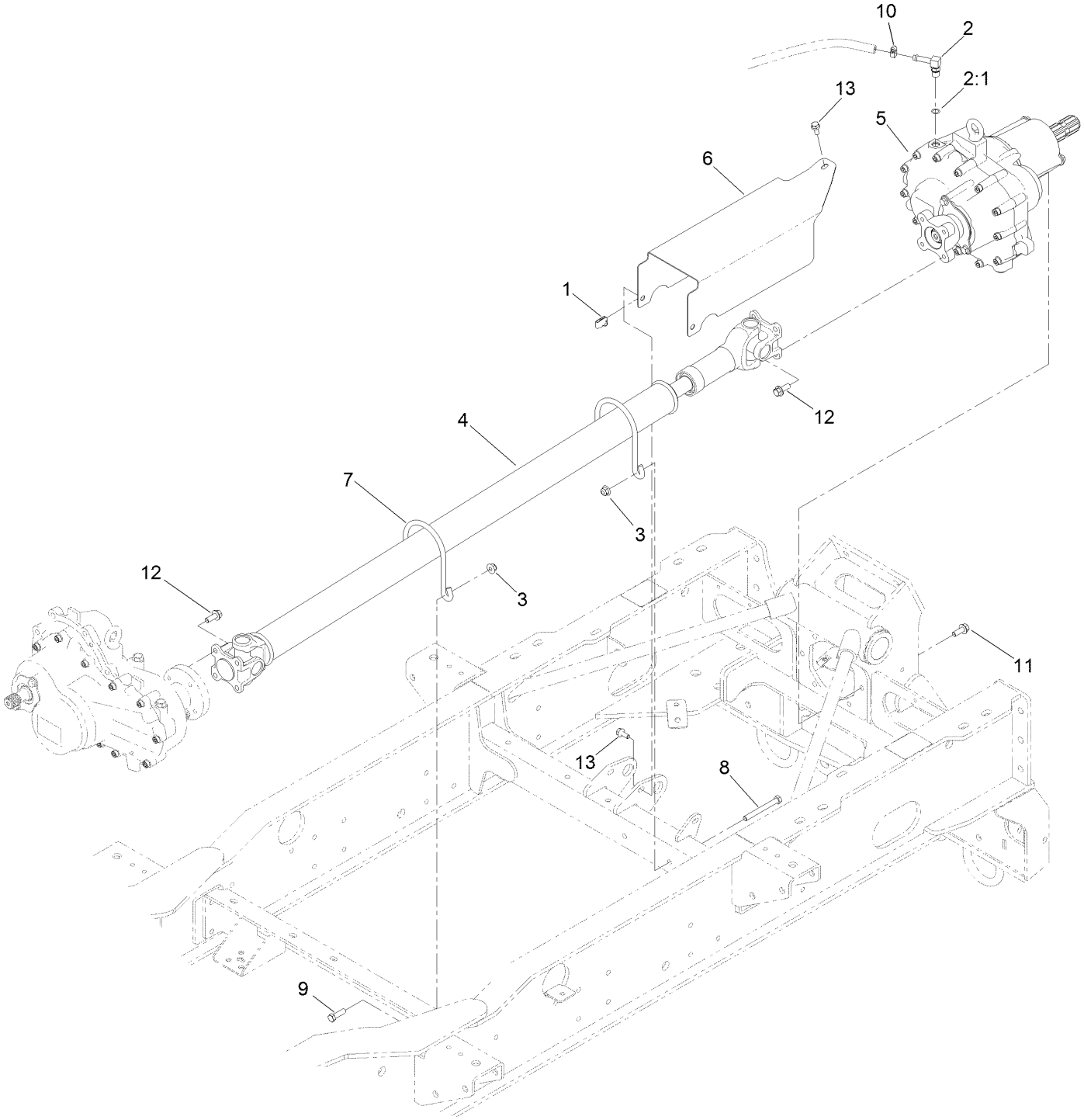

Driveshaft and Gearbox Assembly (continued)

Ref.	Part Number	Qty.	Description
1	94-2413	2	Nut-U
2	126-2927	1	Fitting-90 DEG
2:1	237-42	1	O-Ring
3	104-8301	4	Nut-HF, NI
4	132-7844	1	Driveshaft ASM
5	133-4790	1	Gearbox ASM
6	136-5149-03	1	Shield-Driveshaft
7	136-9977	2	Rod-Guard
8	323-15	2	Screw-HH
9	323-7	2	Screw-HH
10	2412-108	1	Clamp-Worm
11	3234-11	6	Screw-HHF
12	3234-42	8	Screw-HHF
13	3234-47	3	Screw-HHF

Gearbox Assembly No. 133-4790

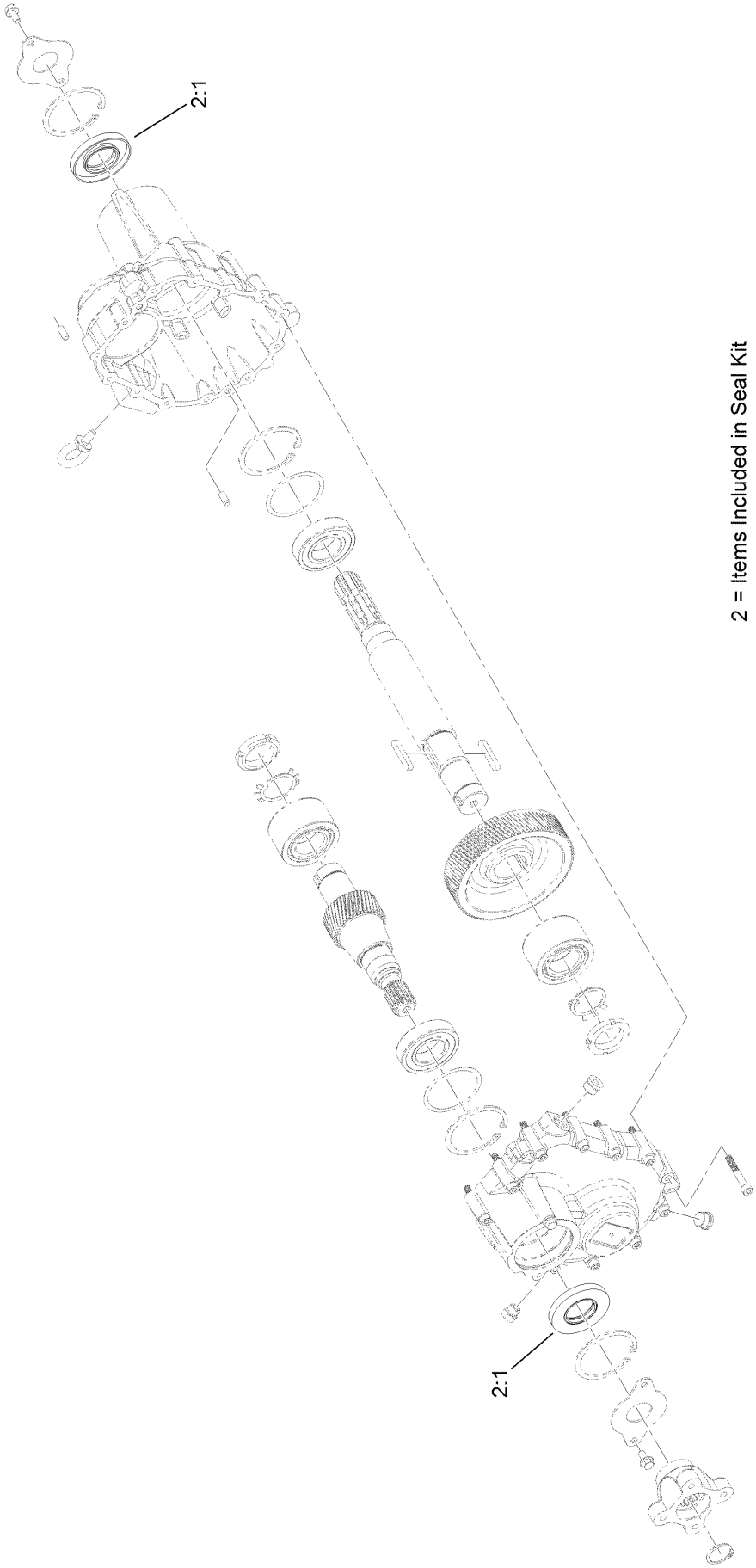

2 = Items Included in Seal Kit

Gearbox Assembly No. 133-4790 (continued)

Ref.	Part Number	Qty.	Description
2	136-5279	1	Seal Kit
2:1	133-4882	2	Seal-Shaft

Drawbar Hitch and Upper Link Assembly

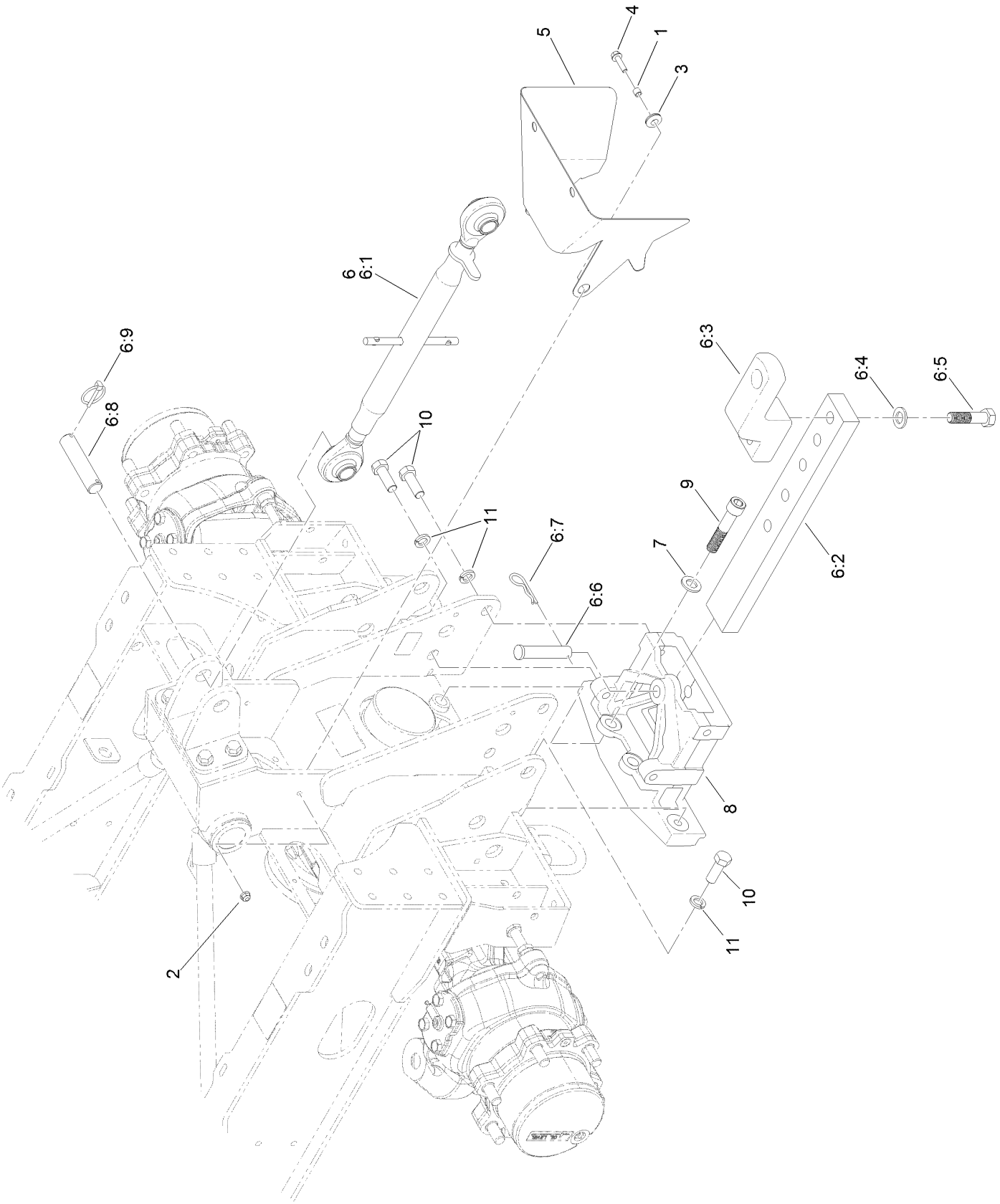

Drawbar Hitch and Upper Link Assembly (continued)

Ref.	Part Number	Qty.	Description
1	1-633545	2	Spacer
2	104-8300	2	Nut-HF, NI
3	112-9559	2	Grommet
4	119-4036	2	Screw-HHF
5	133-7631-03	1	Shield-Shaft, PTO
6	136-5135	1	Drawbar Upper Arm ASM
6:1	132-8090	1	Pitch Control Link ASM
6:2	133-7620-03	1	Drawbar
6:3	133-7621-03	1	Hammer Strap
6:4	136-5267	2	Washer-Plain
6:5	136-5257	2	Screw-HH
6:6	136-8908	1	Pin-Clevis
6:7	3290-343	1	Pin-Hair
6:8	131-5443	1	Pin-Cylinder
6:9	92-1298	2	Pin-Lynch
7	136-5267	2	Washer-Plain
8	136-5318	1	Support-Drawbar
9	136-9729	2	Screw-HSH
10	327-5	6	Screw-HH
11	3253-23	6	Washer-Lock

Rear Lift Assembly

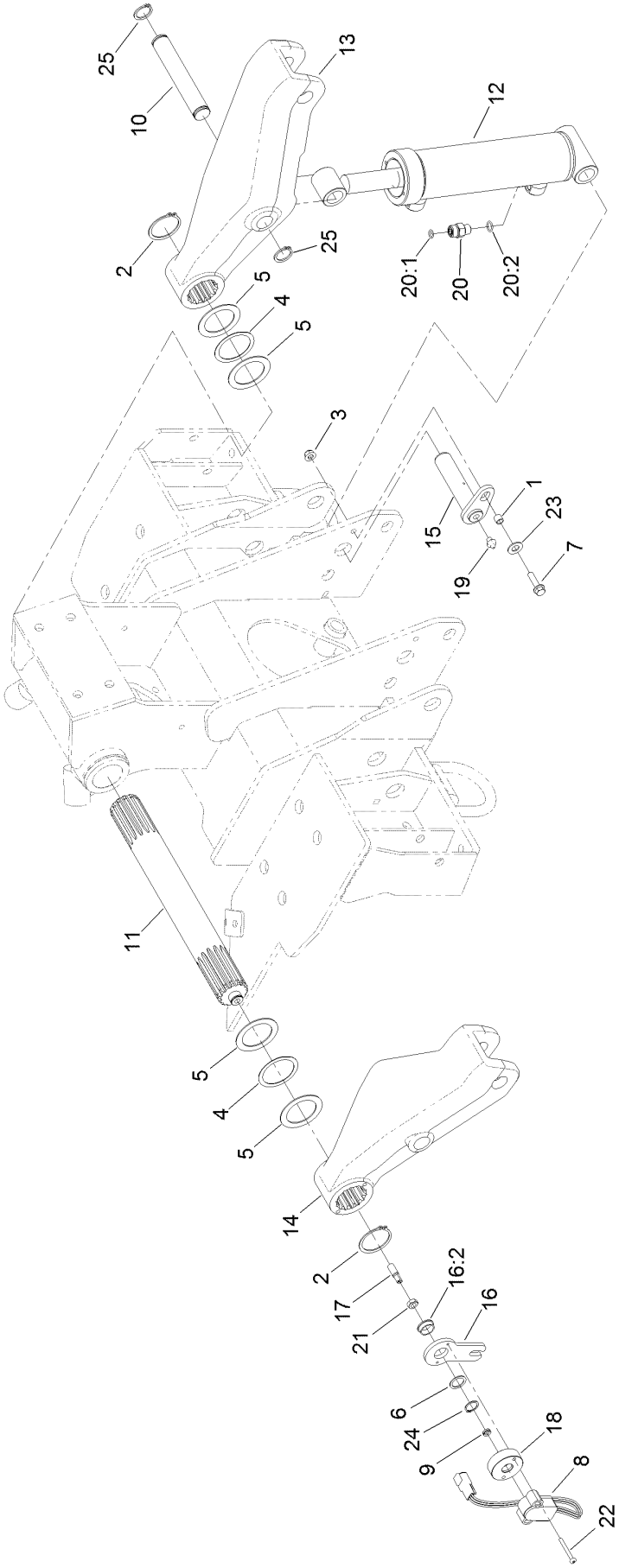

Rear Lift Assembly (continued)

Ref.	Part Number	Qty.	Description
1	1-633545	2	Spacer
2	100-4196	2	Ring-Retaining
3	104-8300	2	Nut-HF, NI
4	107-3947	2	Washer-Nylon
5	115-0169	4	Washer-Thrust
6	115-7210	1	Washer-Thrust
7	119-4036	2	Screw-HHF
8	122-0943	1	Sensor-Position
9	131-3187	1	Seal-V-Ring
10	131-5444	2	Pin
11	140-0469	1	Shaft-Splined
12	133-7622	2	Cylinder-HYD
13	133-7626	1	Arm-Lift, RH
14	133-7628	1	Arm-Lift, LH
15	133-7638	2	Pin ASM
16	133-7800	1	Sensor Stop ASM
16:2	99-4243	1	Bushing-Flange
17	133-7804	1	Shaft-Sensor
18	133-7805	1	Spacer-Sensor
19	302-2	2	Fitting-Grease
20	340-2	4	Fitting-Straight
20:1	237-22	1	O-Ring
20:2	237-42	1	O-Ring
21	3220-3	1	Nut-HJ
22	3250-48	2	Screw-PPH
23	3256-25	2	Washer-Flat
24	32120-72	1	Ring-Snap
25	32151-36	4	Ring-Retaining

Hydraulic Cylinder Assembly No. 133-7622

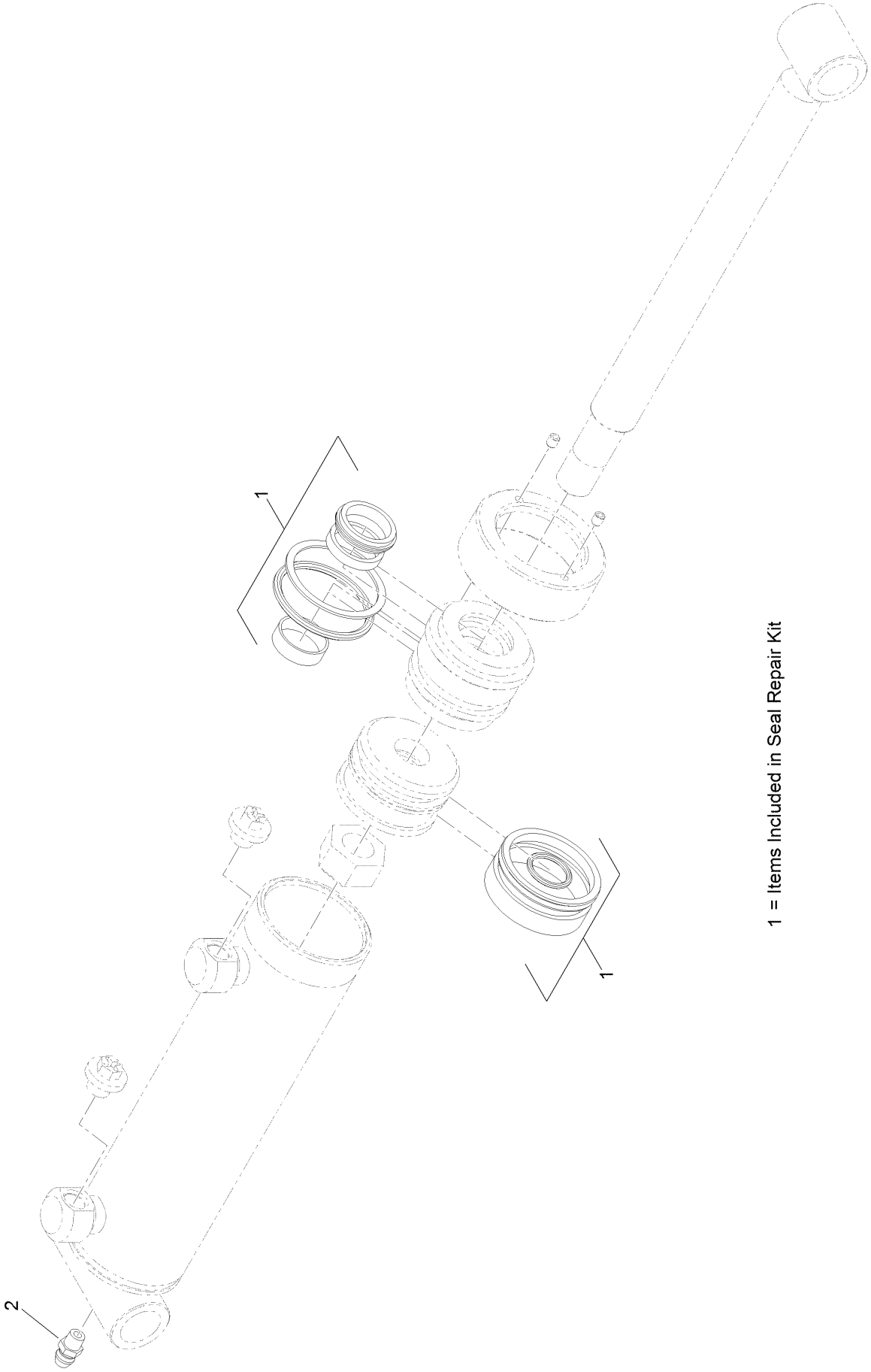

1 = Items Included in Seal Repair Kit

Hydraulic Cylinder Assembly No. 133-7622 (continued)

Ref.	Part Number	Qty.	Description
1	138-7821	1	Seal Repair Kit
2	302-5	1	Fitting-Grease

Lower Link Assembly

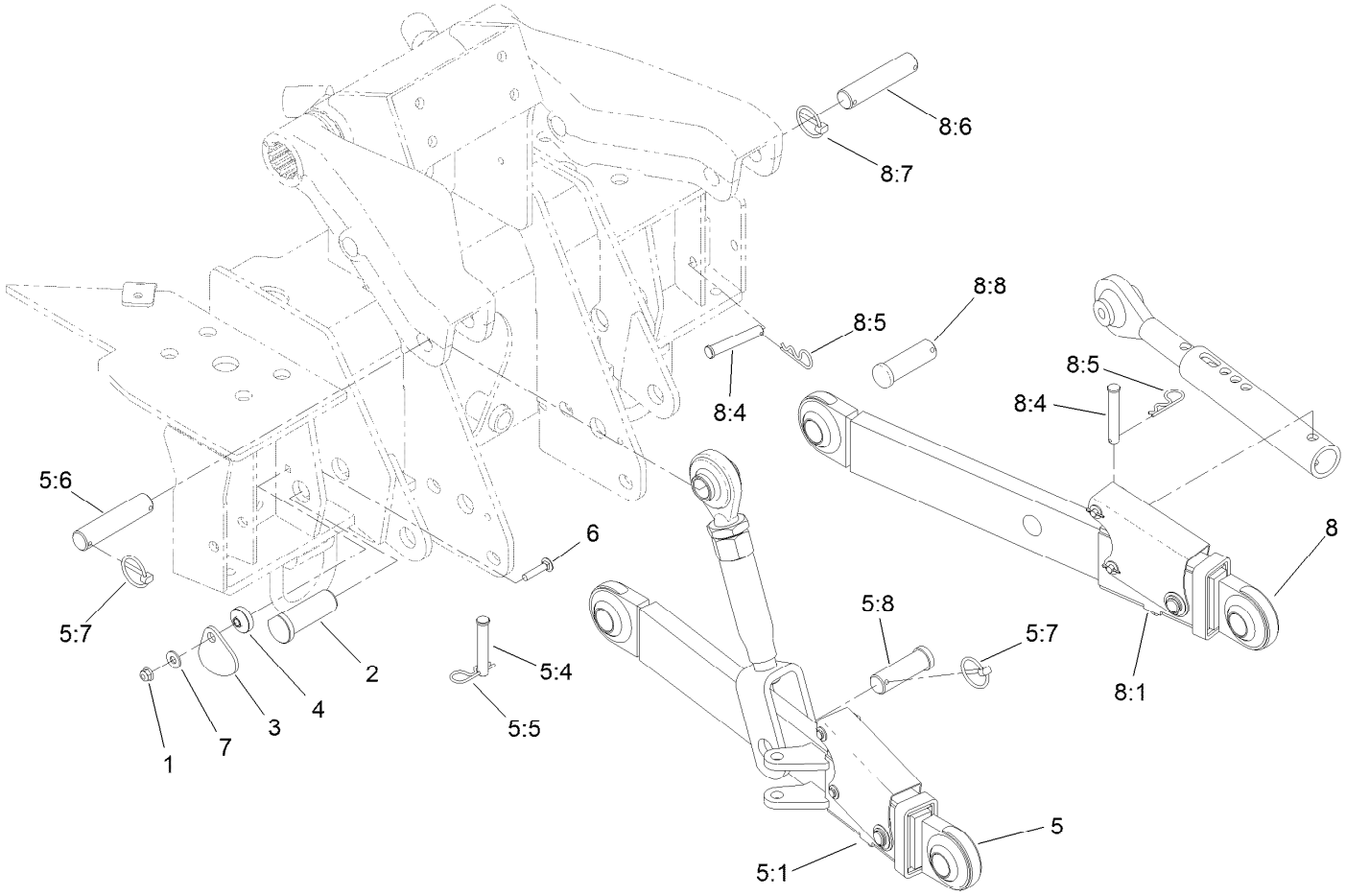

Lower Link Assembly (continued)

Ref.	Part Number	Qty.	Description
1	104-8300	2	Nut-HF, NI
2	133-7623	2	Pin-Lower
3	133-7624	2	Plate-Latch
4	133-7629	2	Hub-Latch
5	140-0481	1	3Pt Extendable Arm Kit-LH
5:1		1	Extendable Arm ASM, LH ●
5:4	283-55	3	Pin-Clevis
5:5	92-2762	3	Pin-Hair
5:6	131-5443	1	Pin-Cylinder
5:7	92-1298	3	Pin-Lynch
5:8	131-5650	1	Pin-Clevis
6	3230-4	2	Bolt-CARR
7	3256-3	2	Washer-Flat
8	140-0482	1	3Pt Extendable Arm Kit-RH
8:1		1	Extendable Arm ASM, RH ●
8:4	283-55	3	Pin-Clevis
8:5	92-2762	3	Pin-Hair
8:6	131-5443	1	Pin-Cylinder
8:7	92-1298	3	Pin-Lynch
8:8	131-5650	1	Pin-Clevis

● Not serviced separately

LH Extendable Arm Assembly

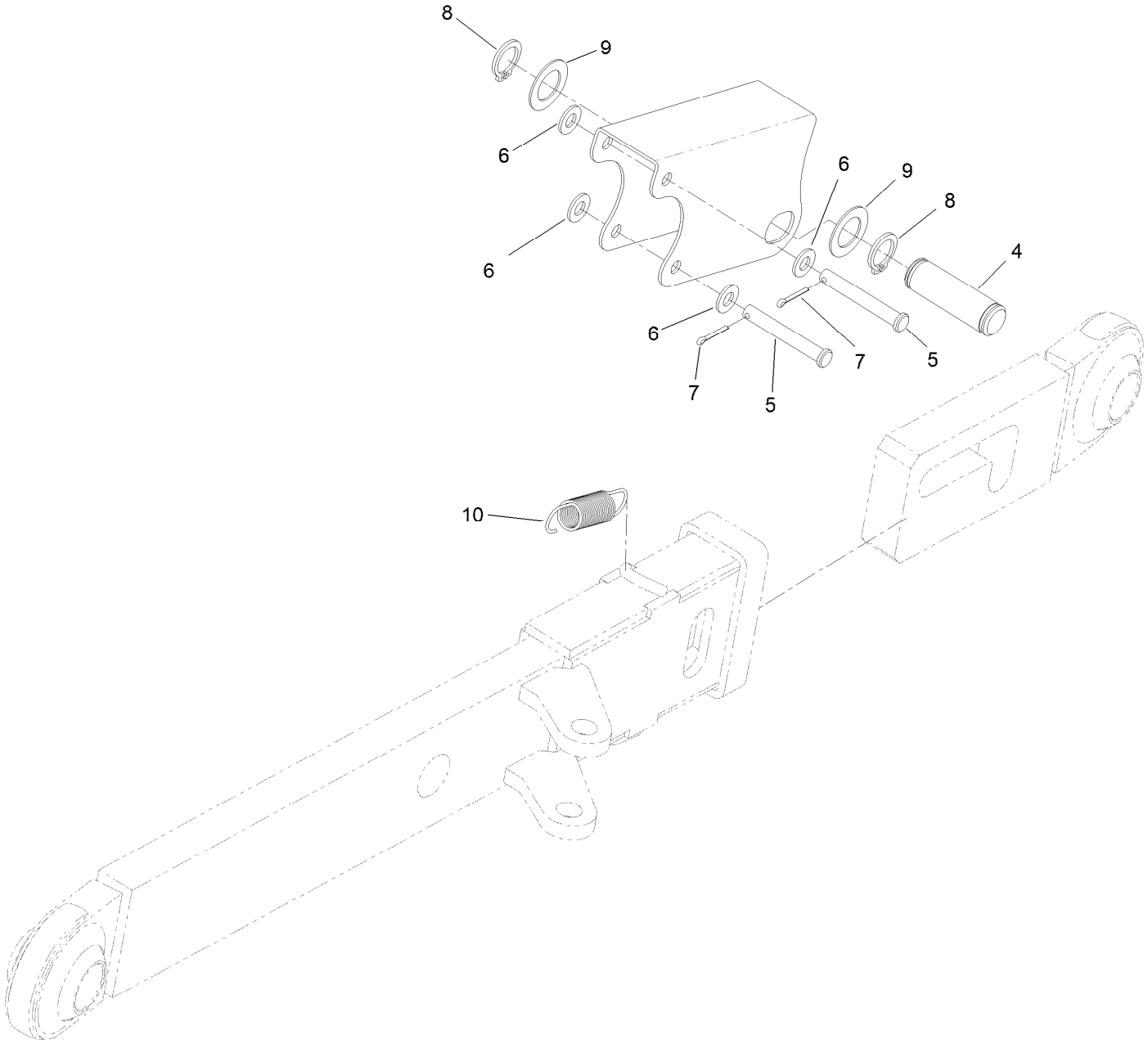

LH Extendable Arm Assembly (continued)

Ref.	Part Number	Qty.	Description
4	110-8189	1	Pin-Plain
5	110-0618	2	Pin-Clevis
6	3256-23	4	Washer-Plain
7	3272-6	2	Pin-Cotter
8	32120-93	2	Ring-Retaining
9	1-413235	2	Washer, Spacer
10	120-3888	1	Spring-Extension

RH Extendable Arm Assembly

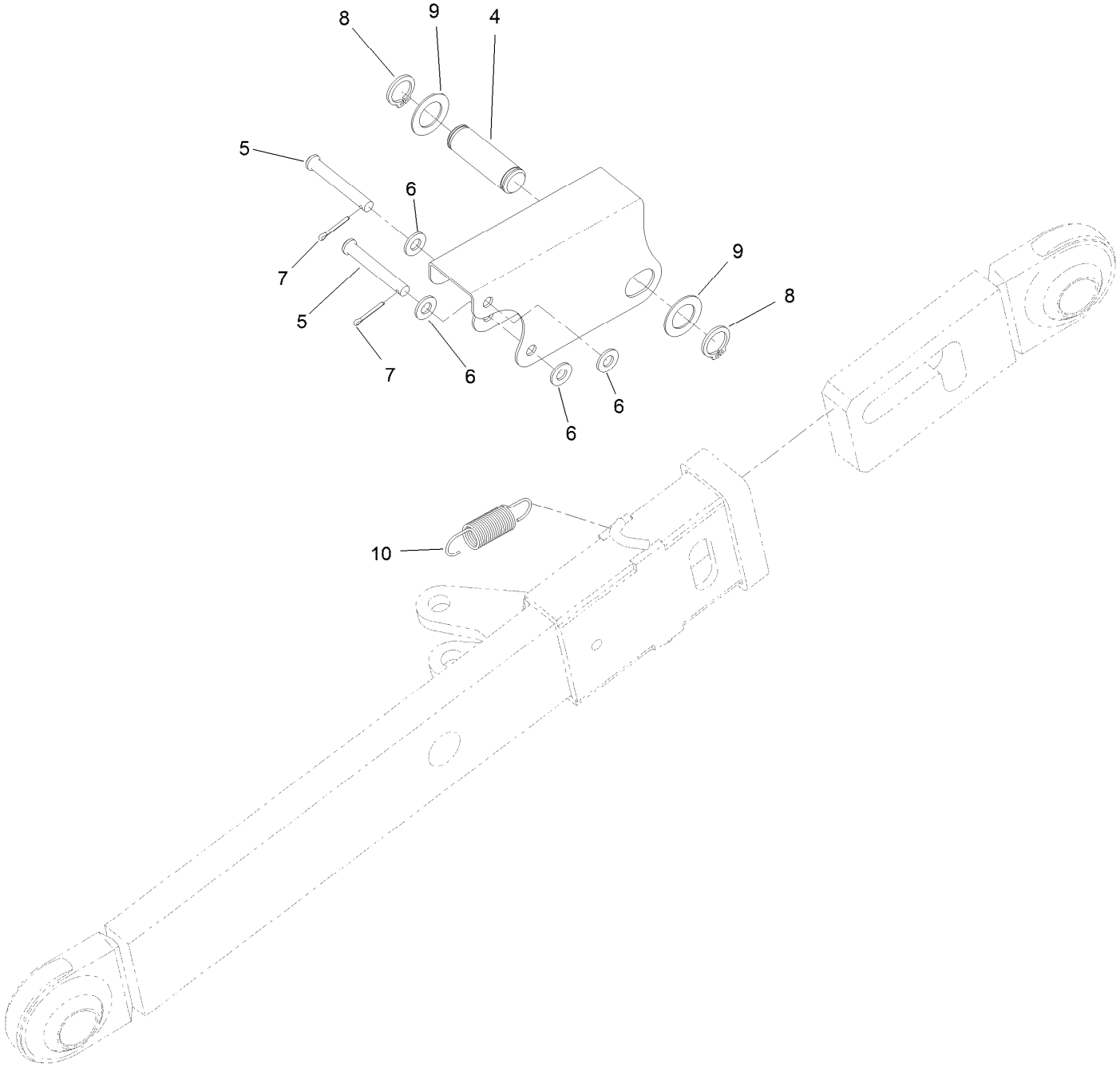

RH Extendable Arm Assembly (continued)

Ref.	Part Number	Qty.	Description
4	110-8189	1	Pin-Plain
5	110-0618	2	Pin-Clevis
6	3256-23	4	Washer-Plain
7	3272-6	2	Pin-Cotter
8	32120-93	2	Ring-Retaining
9	1-413235	2	Washer, Spacer
10	120-3888	1	Spring-Extension

Operator Platform Assembly

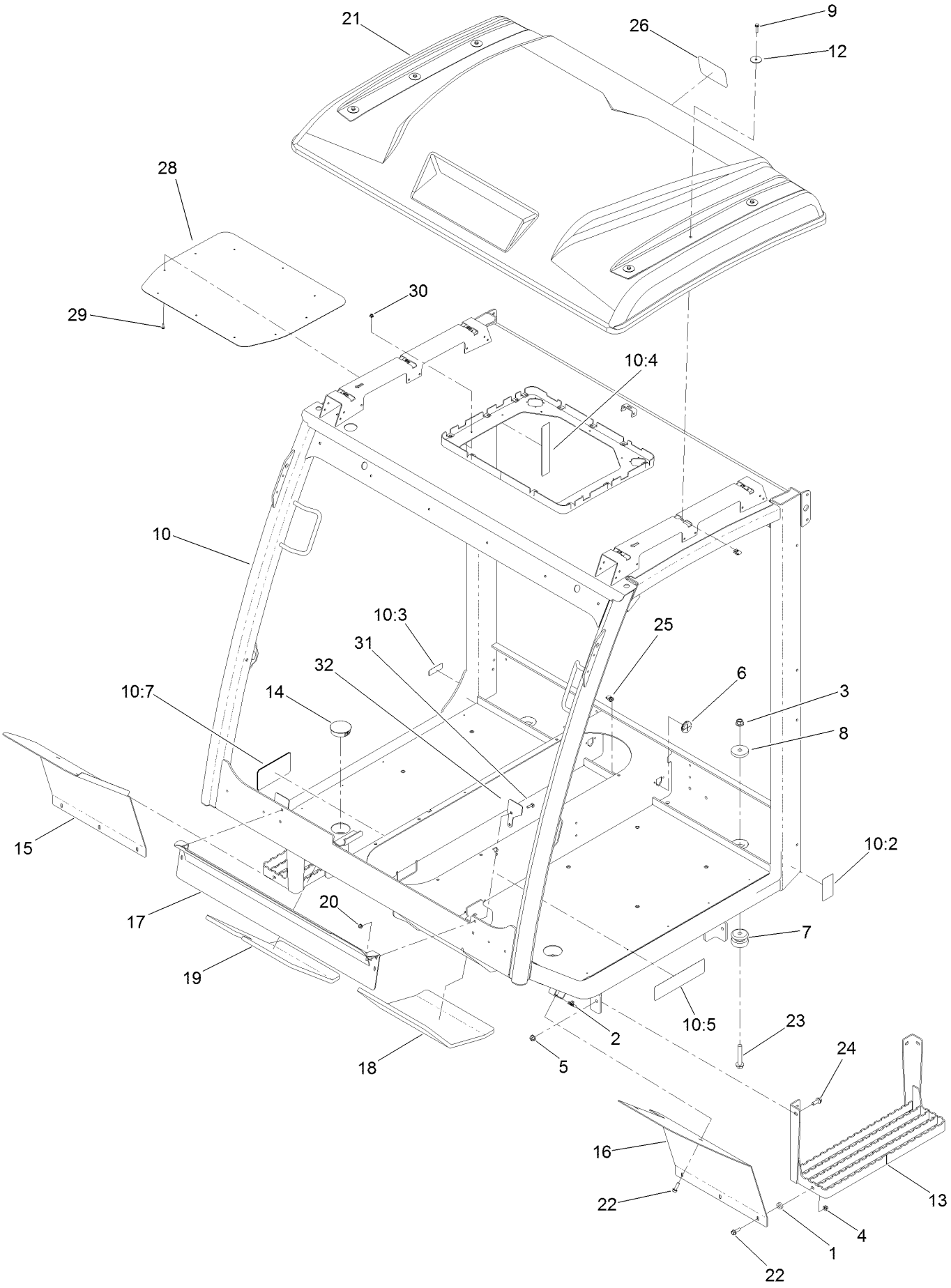

Operator Platform Assembly (continued)

Ref.	Part Number	Qty.	Description
1	5-0652	2	Spacer
2	94-2413	4	Nut-U
3	99-5107	4	Nut-Lock
4	104-8300	2	Nut-HF, NI
5	104-8301	8	Nut-HF, NI
6	138-8134	2	Grommet-Web
7	110-5954	4	Mount-Center, Bonded
8	115-5519	4	Washer-Plain
9	120-4654	6	Screw-HHF
10		1	Platform ASM ●
10:2	138-3796	1	Decal-Safety, Battery
10:3	131-8410	1	Decal-Danger, Fuel
10:4	138-3797	2	Decal-Safety, ROPS
10:5	136-9873	1	Decal-Safety
10:7	138-4136	1	Decal-Parking Brake Release
12	136-7176	6	Washer-Fender
13	136-9630-03	2	Step
14	136-9791	2	Plug-Panel
15	136-9996-03	1	Fender-Front, RH
16	136-9997-03	1	Fender-Front, LH
17	138-1861-03	1	Bracket-Seal
18	138-2015	1	Foam-LH
19	138-2016	1	Foam-RH
20	104-7201	4	Nut-HF, NI
21	138-2716	1	Roof-Short
22	3234-17	6	Screw-HHF
23	3234-40	4	Screw-HF
24	3234-42	8	Screw-HHF
25	107069	15	Clip
26	108-8452	1	Decal-Logo
28	138-8046-03	1	Insert-Roof
29	117-2382	10	Plug-Plastic
30	107069	6	Clip
31	3229-2	4	Screw-CARR
32	138-2949-03	2	Plate-Retainer

● Not serviced separately

Seat Mount Assembly

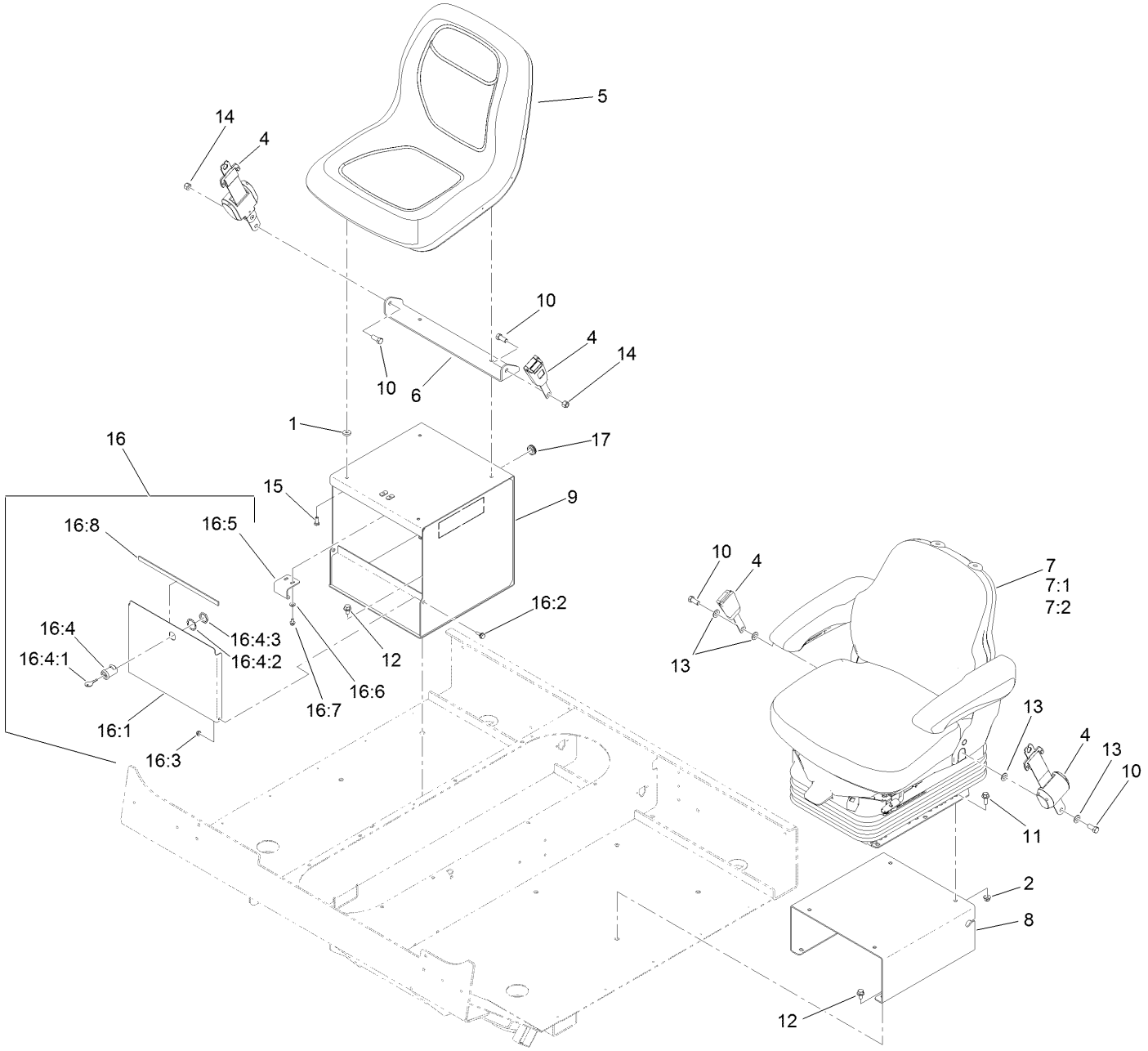

Seat Mount Assembly (continued)

Ref.	Part Number	Qty.	Description
1	104-7658	2	Spacer
2	104-8301	4	Nut-HF, NI
4	110-0413	2	Seatbelt-Retractable
5	112-2923	1	Seat ASM
6	119-0727-03	1	Bracket-Belt, Seat
7	138-3805	1	Seat And Suspension ASM
7:1	130-2702	1	Air Ride Seat Suspension
7:2	138-3806	1	Premium Seat ASM
8	136-9751-03	1	Base-Seat, Deluxe
9	138-2022-03	1	Base-Seat
10	3212-4	4	Screw-HH
11	3234-42	4	Screw-HHF
12	3234-9	8	Screw-HHF
13	3256-25	4	Washer-Flat
14	3296-7	2	Nut-Lock
15	33114-020	4	Screw-HH
16	130-4831	1	Seat Storage Kit
16:1	136-9990-03	1	Cover-Front
16:2	120-7024	2	Screw-Shoulder, HWH
16:3	104-7201	2	Nut-HF, NI
16:4	98-9315	1	Latch-Locking
16:4:1	99-8350	2	Key-Latch, Locking
16:4:2		1	Washer-Switch ●
16:4:3		1	Nut-Switch ●
16:5	136-9991	1	Plate-Latch
16:6	3256-22	2	Washer-Flat
16:7	3234-13	2	Screw-HHF
16:8	130-9174	1	Foam-Cooler, Short
17	237-124	1	Grommet

● Not serviced separately

Seat Suspension Assembly No. 130-2702

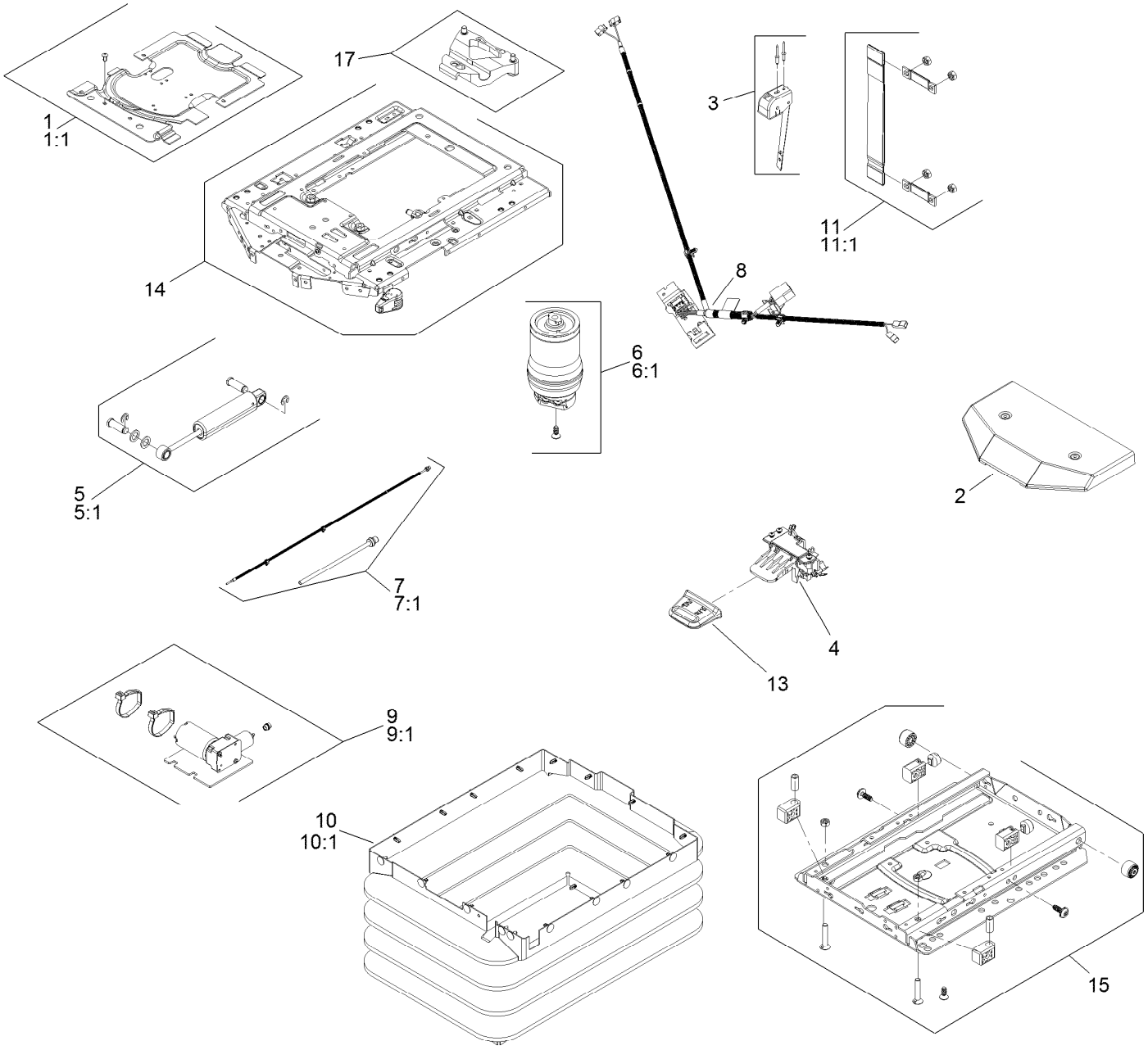

Seat Suspension Assembly No. 130-2702 (continued)

Ref.	Part Number	Qty.	Description
1	130-2709	1	Cover ASM
1:1	130-2710	1	Cover Kit
2	108-8027	1	Cover
3	130-2711	1	Control-Level
4	108-8029	1	Valve-Control, Air
5	130-2712	1	Shock Absorber ASM
5:1	130-2713	1	Shock Absorber Kit
6	130-2714	1	Air Spring ASM
6:1	130-2715	1	Air Spring Kit
7	130-2716	1	Air Tube ASM
7:1	130-2717	1	Air Tube Kit
8	130-2718	1	Harness-Wire
9	130-2719	1	Compressor
9:1	130-2720	1	Compressor Kit
10	130-2721	1	Bellows ASM
10:1	130-2722	1	Bellows Kit
11	130-2723	1	Tether
11:1	130-2724	1	Tether Kit
12	130-2725	1	Wear Parts Kit ●
13	130-2726	1	Handle
14	130-2727	1	Upper Suspension Kit
15	130-2728	1	Lower Suspension Kit
16	130-2729	1	Adjuster Mounting Kit ●
17	130-2730	1	Limiter-Thrust

● Not illustrated

Premium Seat Assembly No. 138-3806

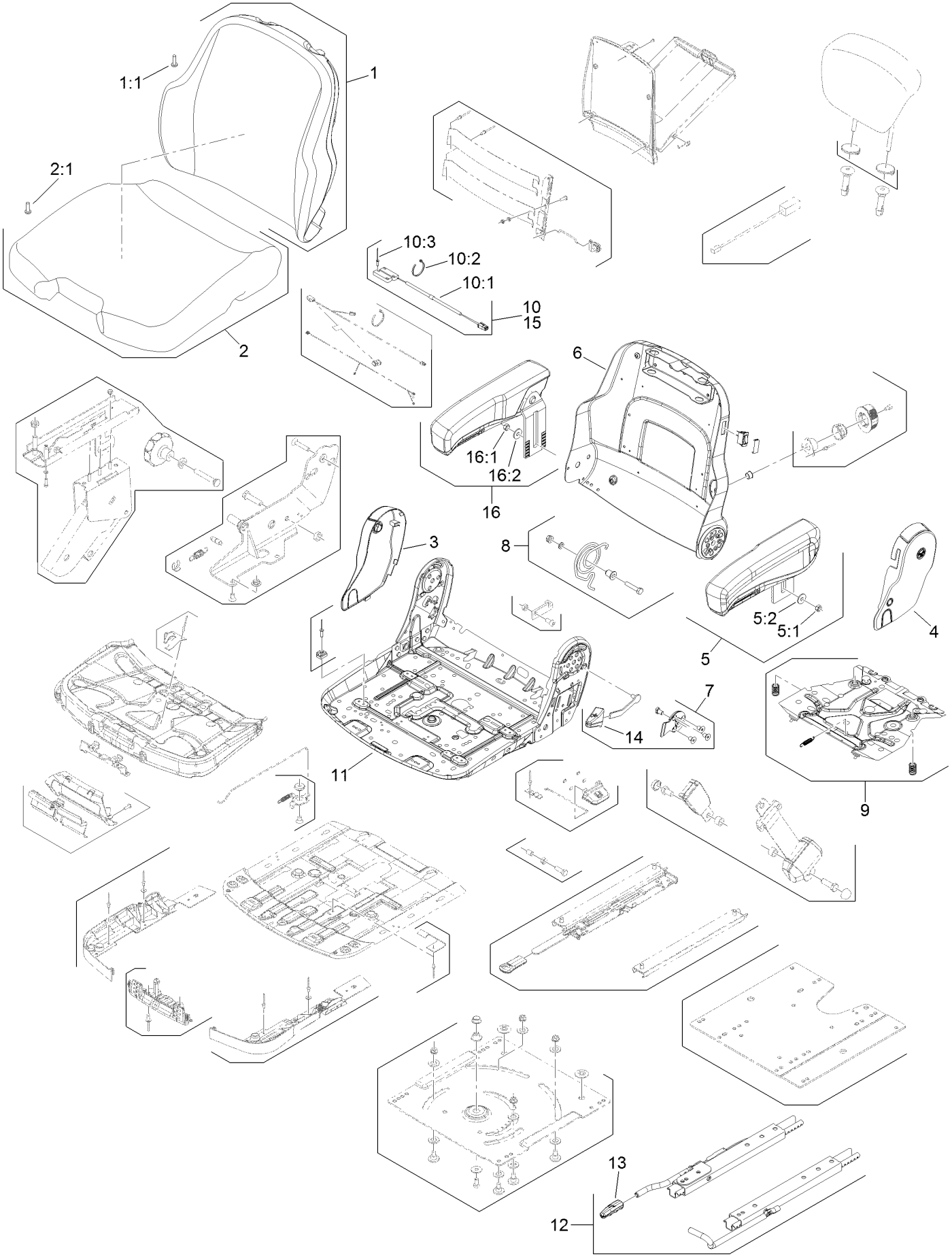

Premium Seat Assembly No. 138-3806 (continued)

Ref.	Part Number	Qty.	Description
1	117-9415	1	Backrest Cushion ASM Matrix Cloth
1	108-8016	1	Backrest Cushion ASM Vinyl
1:1	119-7742	4	Screw-Cushion
2	108-8017	1	Seat Cushion ASM Vinyl
2	117-9416	1	Seat Cushion ASM Matrix Cloth
2:1	119-7742	3	Screw-Cushion
3	108-8018	1	Cover-Armrest
4	108-8021	1	Cover-Armrest
5	108-8019	1	LH Armrest ASM
5:1	82-9650	1	Nut
5:2	107-1198	1	Washer
6	140-0470	1	Backrest Kit
7	132-1304	1	Backrest Adjustment Kit
8	140-0471	1	Backrest Bearing
9	140-0472	1	Compensator
10	110-6189	1	Switch Kit
10:1		1	Switch ●
10:2		3	Wire Tie ●
10:3		2	Rivet ●
11	140-0473	1	Seat Pan Kit
12	108-8025	1	Adjustment Rail Set
13	140-0475	1	Handle
14	140-0476	1	Handle Grip-Back Angle
15	140-0477	1	Small Parts-Seat Switch
16	108-8020	1	RH Armrest ASM
16:1	82-9650	1	Nut
16:2	107-1198	1	Washer

● Not serviced separately

Floor Grips and Hydraulic Tube Assembly

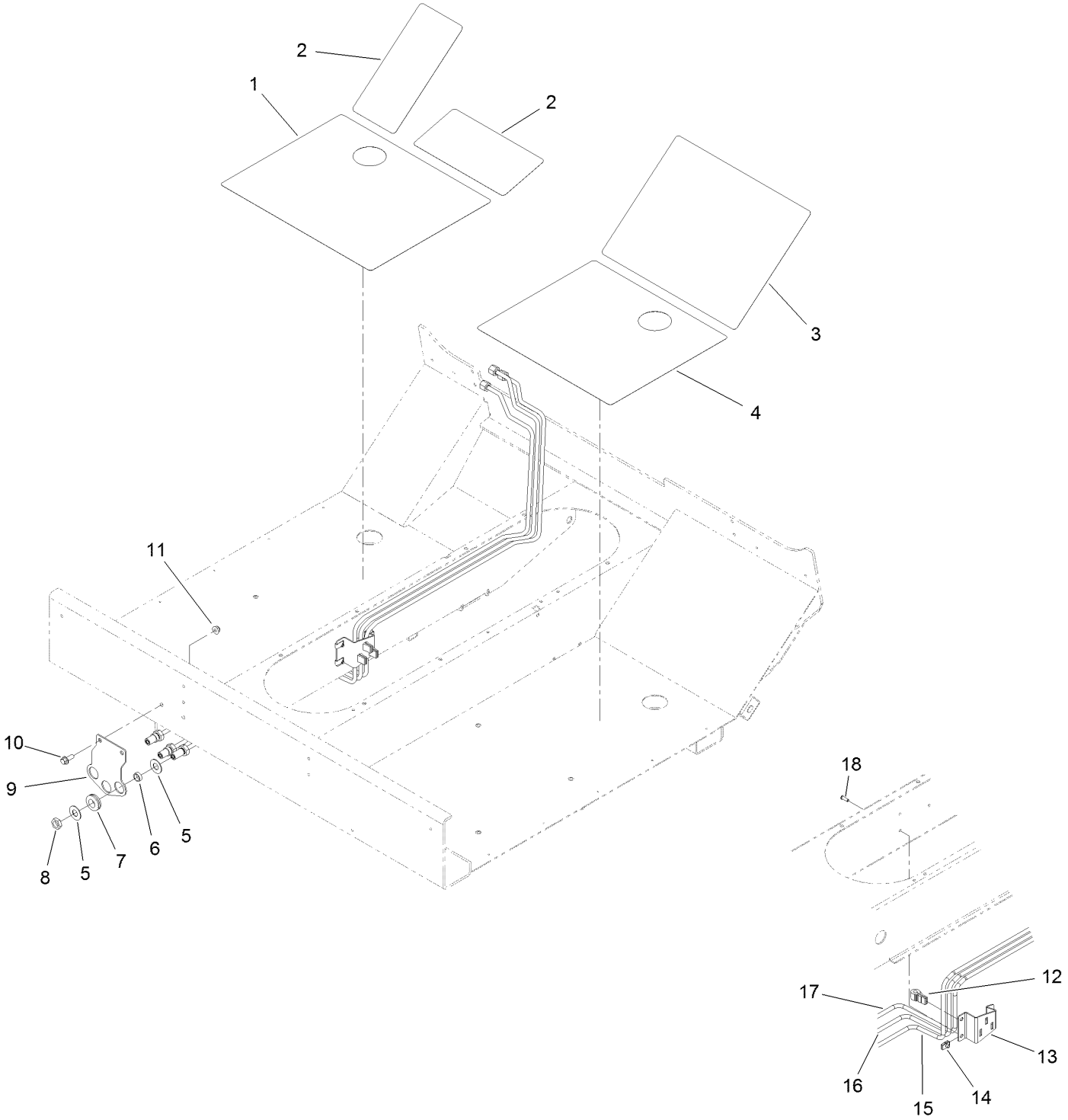

Floor Grips and Hydraulic Tube Assembly (continued)

Ref.	Part Number	Qty.	Description
1	136-9950	1	Tread-Foot, Abrasive (LH)
2	136-9952	2	Tread-Foot, Abrasive Upper
3	138-4169	1	Tread-Foot, Abrasive Front
4	138-4168	1	Tread-Foot, Abrasive RH
5	69-8940	6	Washer
6	69-8970	3	Spacer
7	240-4	3	Grommet-Rubber
8	340-70	3	Nut-Lock
9	137-1264-03	1	Support-Bulkhead
10	3234-42	2	Screw-HHF
11	104-8301	2	Nut-HF, NI
12	136-9782	3	Isolator-Tube
13	138-8129-01	1	Bracket-Isolator
14	107069	3	Clip
15	136-9712	1	Tube ASM
16	136-9711	1	Tube ASM
17	136-9710	1	Tube ASM
18	3274-69	3	Screw-HSBH

Manifold, Filter and Auxiliary Valve Assembly

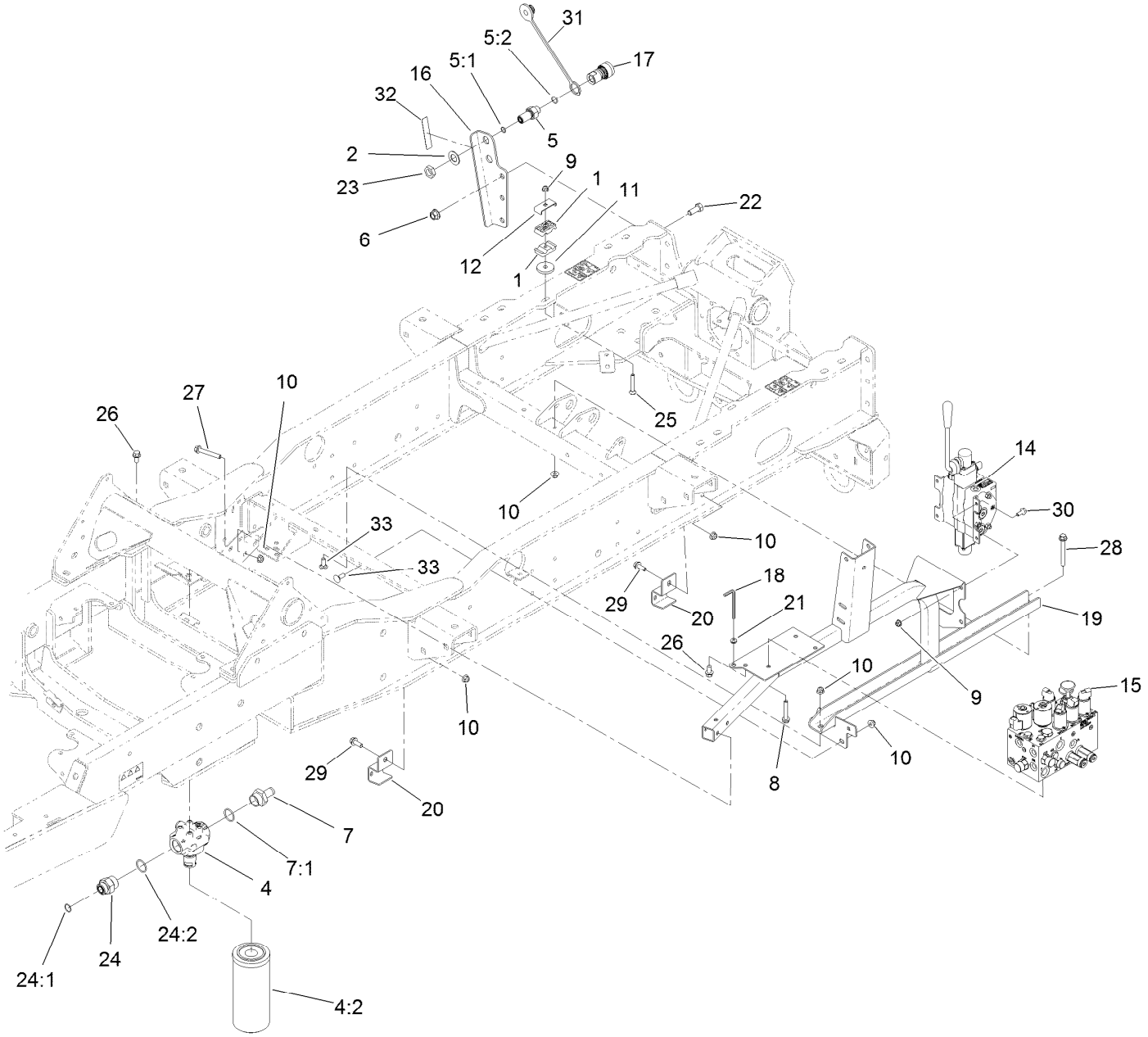

Manifold, Filter and Auxiliary Valve Assembly (continued)

Ref.	Part Number	Qty.	Description
1	56-7976	2	Clamp-Tube
2	69-8930	2	Washer
4	139-1010	1	Filter Head ASM
4:2	94-2621	1	Element-Filter
5	98-9907	2	Union-Bulkhead
5:1	237-30	1	O-Ring
5:2	237-79	1	O-Ring
6	99-5107	2	Nut-Lock
7	99-6932	1	Fitting-STR
7:1	237-117	1	O-Ring
8	100-2592	1	Screw-HHF
9	104-8300	5	Nut-HF, NI
10	104-8301	8	Nut-HF, NI
11	110-9981	1	Washer-Plain
12	119-1419	1	Plate-Clamp
14	131-5637	1	Valve-Aux
15	131-5639	1	Manifold ASM
16	131-5668-03	1	Plate-Bulkhead, Rear
17	133-7827	2	Coupler-Quick Connect

Ref.	Part Number	Qty.	Description
18	136-5288	1	Wrench-Hexagon
19	136-5340-01	1	Support-Manifold
20	136-9718-03	2	Support-Hose
21	136-9976	1	Grommet
22	325-5	2	Screw-HH
23	340-127	2	Nut-Bulkhead
24	340-91	1	Fitting-STR
24:1	237-58	1	O-Ring
24:2	237-146	1	O-Ring
25	3230-7	1	Bolt-CARR
26	3234-1	7	Screw-HHF
27	3234-39	2	Screw-HHF
28	3234-41	1	Screw-HHF
29	3234-42	2	Screw-HHF
30	3234-47	4	Screw-HHF
31	T56152150	2	Plug-Quick Connect
32	138-4135	1	Decal-HYD, Remote
33	3231-2	3	Bolt-CARR

Hydraulic Valve Assembly No. 131-5637

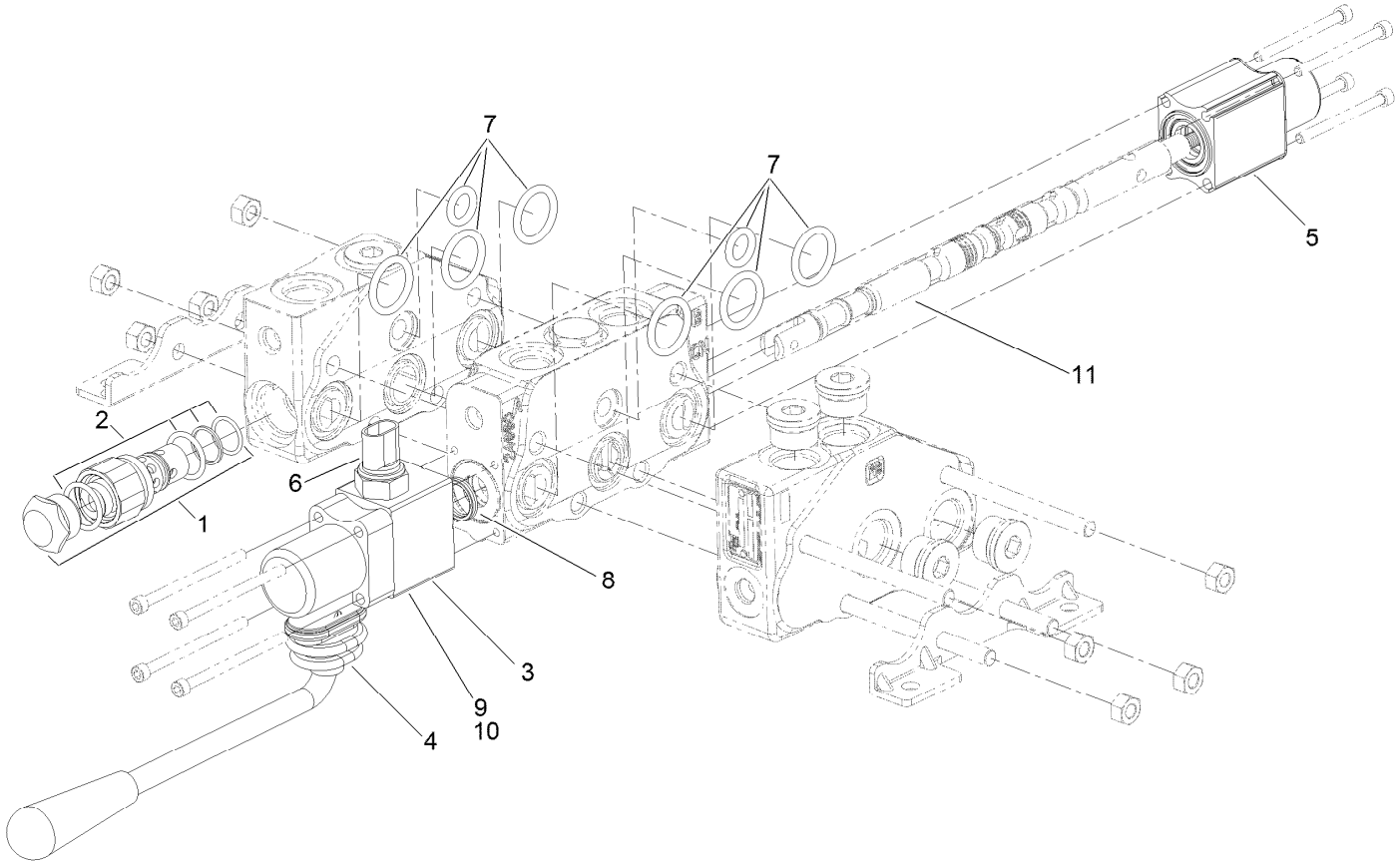

Hydraulic Valve Assembly No. 131-5637 (continued)

Ref.	Part Number	Qty.	Description
1	138-7870	1	Rcm Relief ASM
2	138-7871	1	Seal Kit
3	138-7872	1	Handle-Horizontal, Enclosed
4	131-6753	1	Boot-Dust
5	138-7874	1	Positioner-Spool, Float
6	138-7875	1	Switch-Interlock
7	138-7877	1	Section Seal Kit
8	130-8354	1	O-Ring
9	140-0500	1	Block-Switch Mount
10	140-0501	1	Ring-Pilot
11	140-0502	1	Spool-Switch

Manifold Assembly No. 131-5639

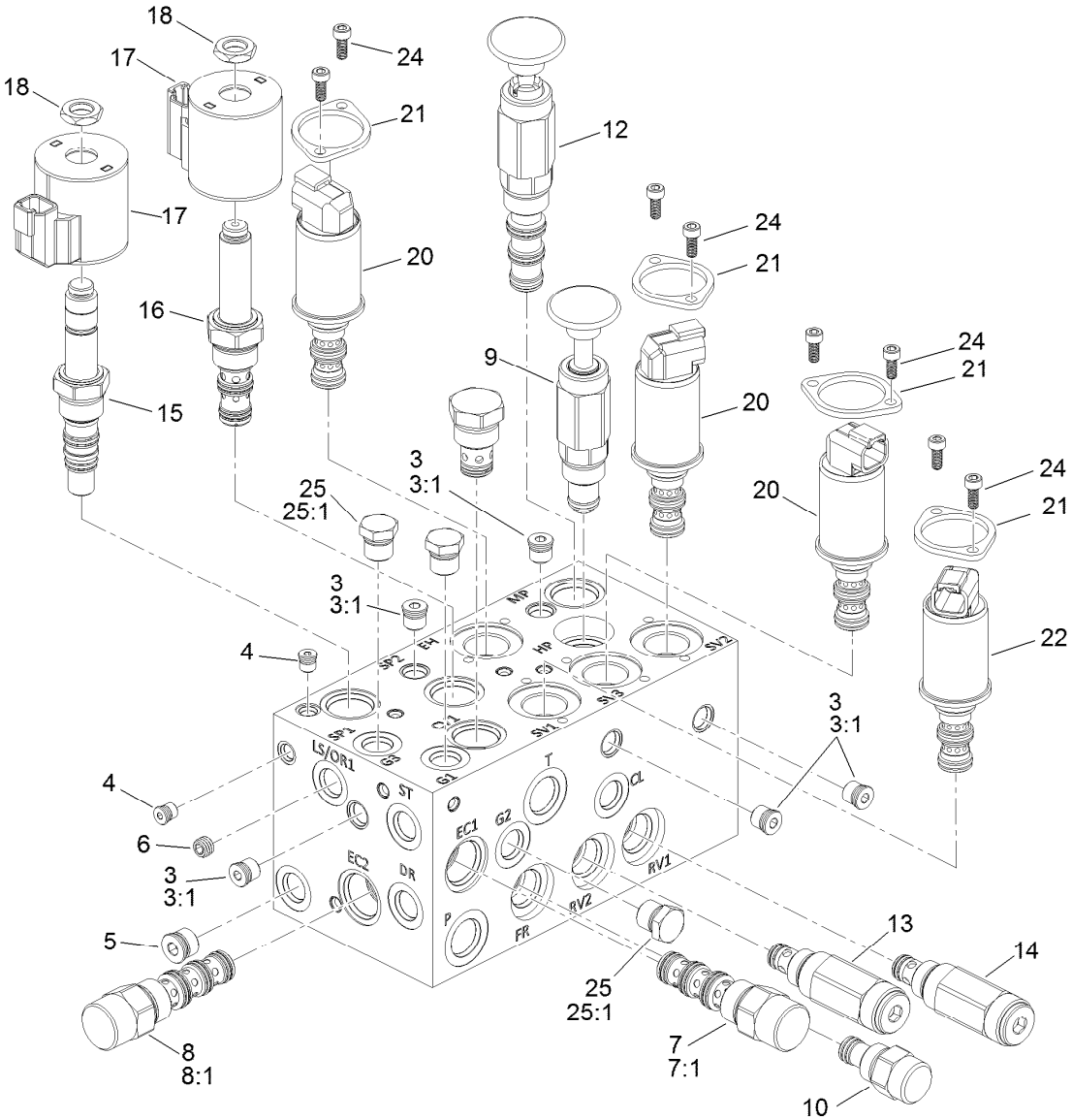

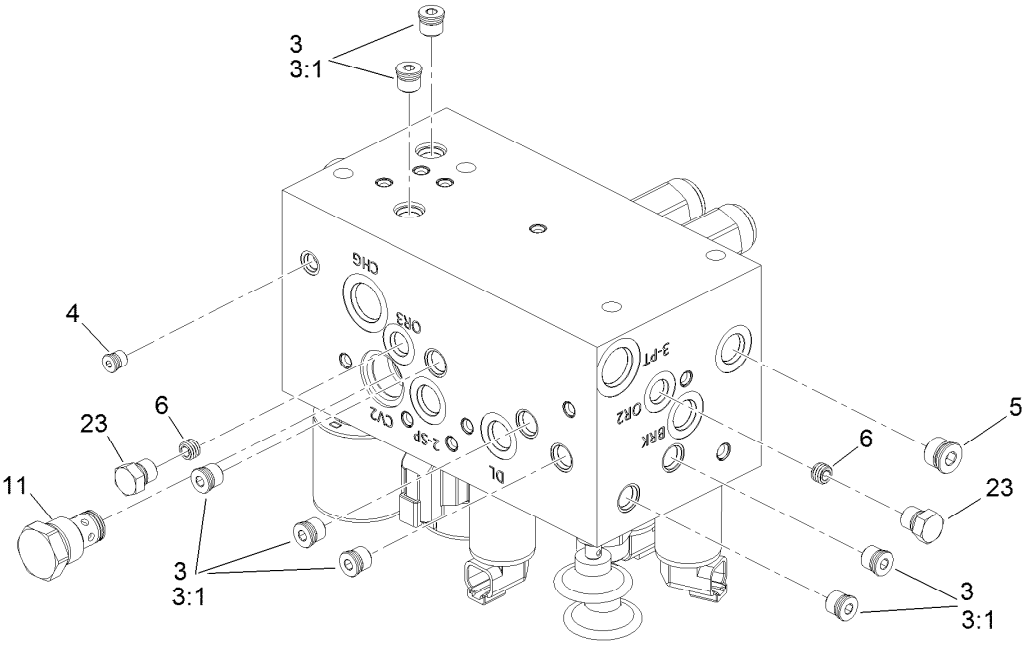

Manifold Assembly No. 131-5639 (continued)

Ref.	Part Number	Qty.	Description
3	353-990	12	Plug ASM
3:1	237-78	1	O-Ring
4	131-1825	3	Plug-ORB
5	112-9213	2	Plug
6	136-4363	3	Orifice-0.028
7	115-5409	1	Compensator ASM
7:1	110-8908	1	Spool Valve Seal Kit
8	117-8314	1	Compensator-Pressure
8:1	110-8908	1	Spool Valve Seal Kit
9	132-4904	1	Pump-Hand
10	138-3820	1	Regulator-Flow, Press Comp
11	110-8881	2	Valve-Check
11:1	105-9159	1	Seal Kit ●
12	132-4903	1	Valve-2 Way, Manual
13	140-0492	1	Valve-Relief
14	138-3821	1	Valve-Relief
15	138-3822	1	Valve-Poppet, Prop
16	138-3823	1	Valve-Flow Control, Prop
17	119-4619	2	Coil-Solenoid
18	110-2634	2	Nut-Coil
20	138-3824	3	Valve-Solenoid
21	138-3825	4	Plate-Mounting, Standard
22	138-3826	1	Valve-Press Reducing/Relieving, Prop
23	117-0115	2	Plug
24	138-3827	8	Screw
25	353-508	3	Plug-HH
25:1	237-42	1	O-Ring

● Not illustrated

Hydraulic Tank Assembly

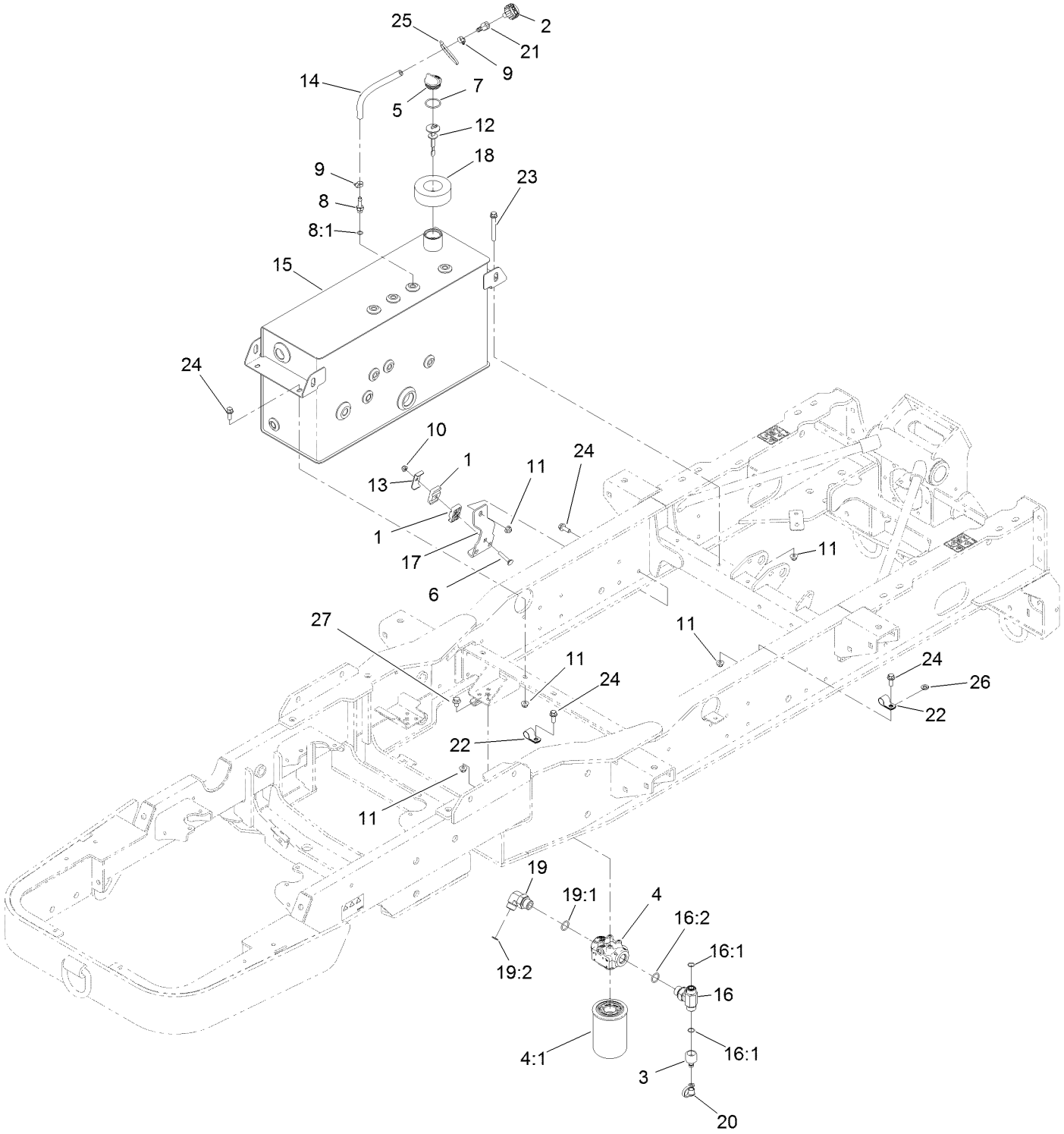

Hydraulic Tank Assembly (continued)

Ref.	Part Number	Qty.	Description
1	56-7972	4	Clamp-Tube
2	68-6150	1	Breather
3	86-5860	1	Nipple
4	93-2242	1	Oil Filter ASM
4:1	75-1310	1	Filter-HYD
5	93-7498	1	Plug-Plastic
6	3230-5	2	Bolt-CARR
7	94-8166	1	O-Ring
8	103-1912	1	Adapter-Straight
8:1	237-42	1	O-Ring
9	2412-108	2	Clamp-Worm
10	104-8300	2	Nut-HF, NI
11	104-8301	8	Nut-HF, NI
12	112-6365	1	Dipstick
13	119-1419	2	Plate-Clamp
14	138-4159	1	Hose-Fuel
15	133-7632	1	Tank-Hydraulic
16	136-9719	1	Fitting-HYD, Tee
16:1	237-65	2	O-Ring
16:2	237-81	1	O-Ring
17	136-9744-03	2	Support-Hardline
18	136-9788	1	Seal-Ring
19	340-139	1	Fitting-Elbow 90
19:1	237-81	1	O-Ring
19:2	237-65	1	O-Ring
20	354-79	1	Cap-Dust
21	354-94	1	Fitting-Female, Barbed
22	2412-81	2	Clamp-R
23	3234-41	2	Screw-HHF
24	3234-42	6	Screw-HHF
25	3290-379	1	Tie-Cable
26	3256-24	2	Washer-Flat
27	33105-016	4	Screw-HHF

Hydraulic Tank and Auxiliary Valve Fitting Assembly

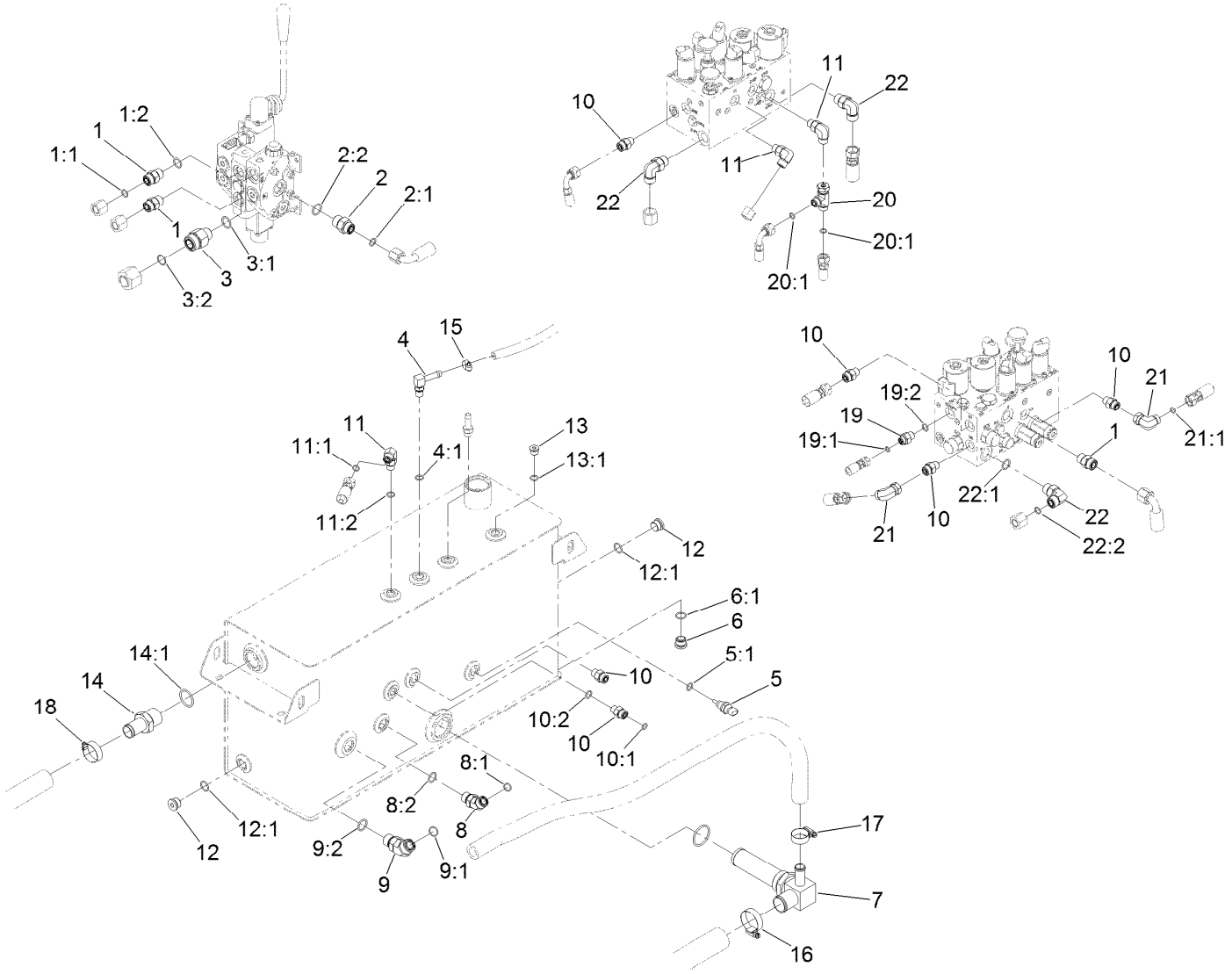

Hydraulic Tank and Auxiliary Valve Fitting Assembly (continued)

Ref.	Part Number	Qty.	Description
1	340-4	3	Fitting-Straight
1:1	237-30	1	O-Ring
1:2	237-79	1	O-Ring
2	340-6	1	Fitting-Straight
2:1	237-30	1	O-Ring
2:2	237-80	1	O-Ring
3	340-66	1	Fitting-Straight
3:1	237-80	1	O-Ring
3:2	237-58	1	O-Ring
4	100-4887	1	Fitting-Elbow, 90
4:1	237-42	1	O-Ring
5	110-8829	1	Sender-Temperature
5:1	237-42	1	O-Ring
6	133-7659	1	Plug ASM
6:1	237-79	1	O-Ring
7	136-5109	1	Strainer Fitting ASM
8	340-101	1	Fitting-HYD, 45 DEG
8:1	237-30	1	O-Ring
8:2	237-79	1	O-Ring
9	340-14	1	Fitting-HYD, 45 DEG
9:1	237-65	1	O-Ring
9:2	237-80	1	O-Ring
10	340-2	6	Fitting-Straight
10:1	237-22	1	O-Ring
10:2	237-42	1	O-Ring
11	340-77	3	Fitting-Elbow, 90 DEG
11:1	237-22	1	O-Ring
11:2	237-42	1	O-Ring
12	353-988	2	Plug-Hex
12:1	237-79	1	O-Ring
13	353-989	1	Plug-Hex, Hollow
13:1	237-42	1	O-Ring
14	354-78	1	Fitting-STR
14:1	237-146	1	O-Ring
15	2412-108	1	Clamp-Worm
16	2412-111	1	Clamp-Hose, W/Liner
17	2412-129	1	Clamp-Hose
18	2412-34	1	Clamp-Hose
19	340-1	1	Fitting-Straight
19:1	237-21	1	O-Ring
19:2	237-42	1	O-Ring
20	340-115	1	Fitting-Tee
20:1	237-22	2	O-Ring
21	340-159	2	Elbow-90
21:1	237-22	2	O-Ring
22	340-98	3	Fitting-Elbow, 90 DEG
22:1	237-79	1	O-Ring
22:2	237-30	1	O-Ring

Hydraulic Hose and Tube Assembly

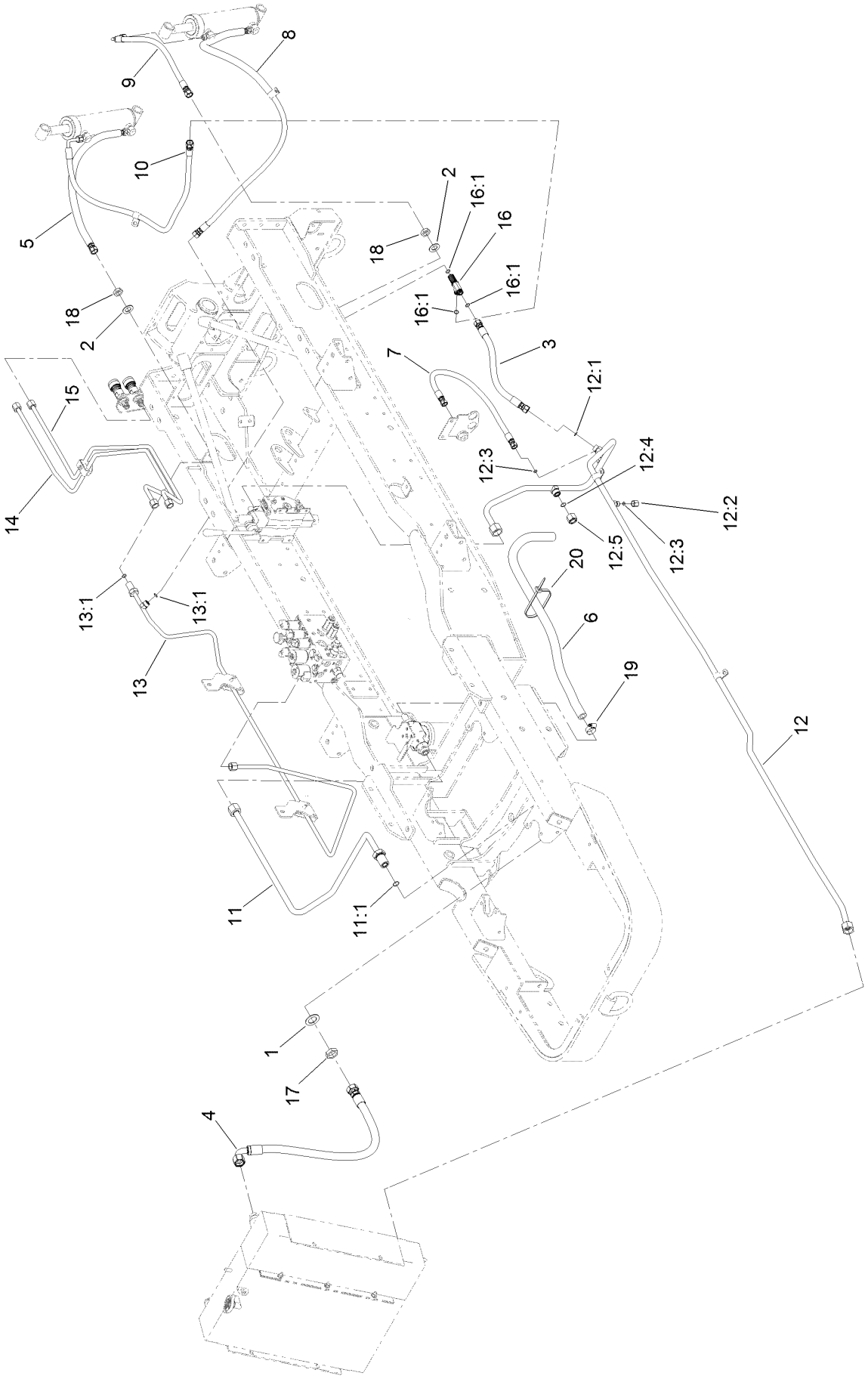

Hydraulic Hose and Tube Assembly (continued)

Ref.	Part Number	Qty.	Description
1	69-8910	1	Washer
2	69-8930	2	Washer
3	114-5501	1	Hose-Hydraulic
4	115-4384	1	Hose-HYD
5	131-2041	1	Hose ASM
6	133-2252	1	Hose
7	132-8941	1	Hose-Hydraulic
8	133-2272	1	Hose ASM
9	133-2273	1	Hose ASM
10	133-2275	1	Hose ASM
11	133-2282	1	Tube-HYD
11:1	237-58	1	O-Ring
12	133-2283	1	Tube ASM-HYD
12:1	237-30	1	O-Ring
12:2	340-117	1	Cap
12:3	237-22	2	O-Ring
12:4	237-65	1	O-Ring
12:5	340-150	1	Cap
13	133-2287	1	Tube ASM-HYD
13:1	237-30	2	O-Ring
14	133-2289	1	Tube ASM-HYD
15	133-2290	1	Tube ASM-HYD
16	340-121	1	Fitting-Tee
16:1	237-30	3	O-Ring
17	340-126	1	Nut-Bulkhead
18	340-127	2	Nut-Bulkhead
19	2412-129	1	Clamp-Hose
20	3290-379	2	Tie-Cable

Hydraulic Hose Assembly 1

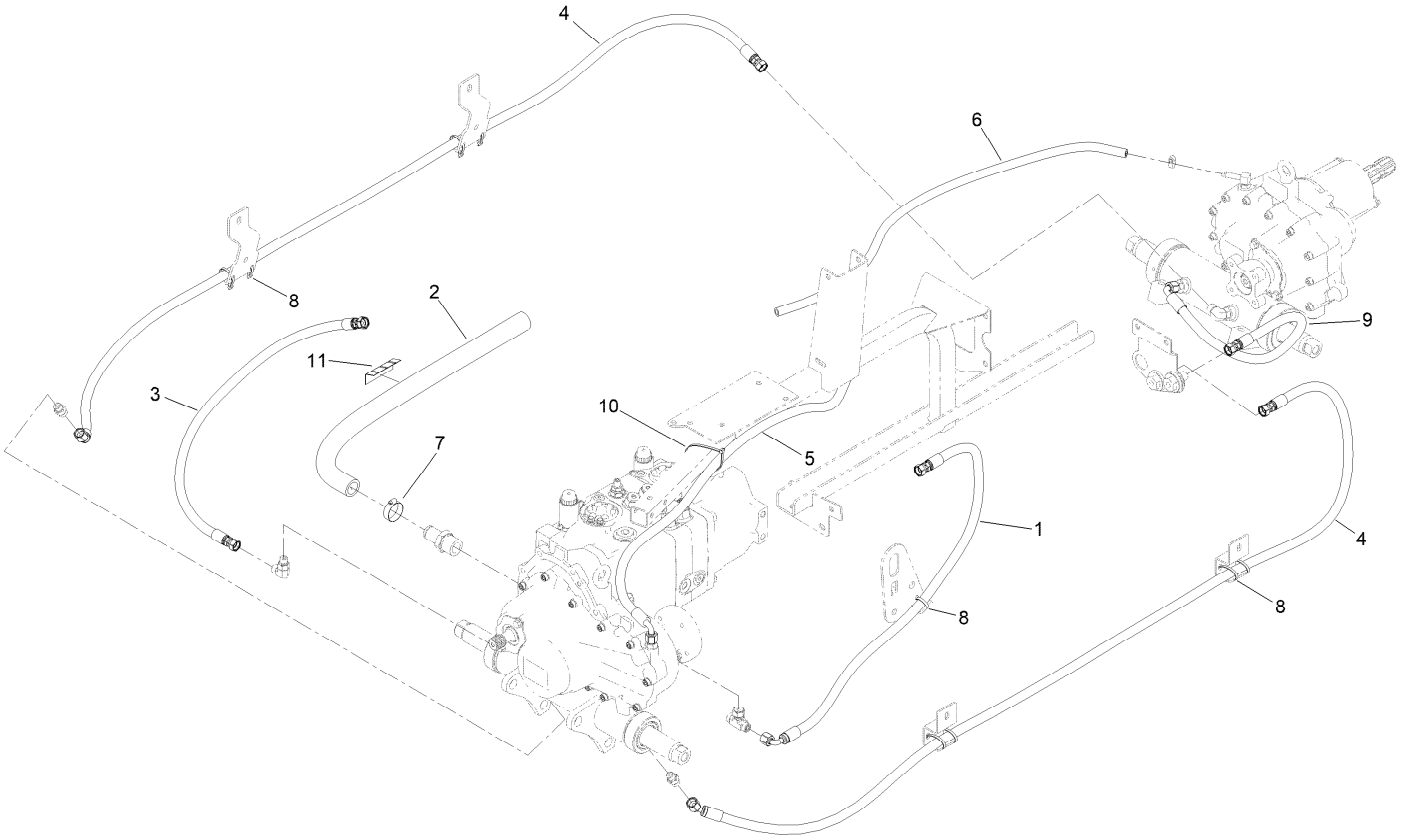

Hydraulic Hose Assembly 1 (continued)

Ref.	Part Number	Qty.	Description
1	93-5385	1	Hose ASM
2	132-6480	1	Hose
3	133-2260	1	Hose ASM
4	136-9700	2	Hose ASM
5	136-9705	1	Hose ASM
6	136-9706	1	Hose
7	2412-34	1	Clamp-Hose
8	3290-378	9	Tie-Cable
9	92-5687	1	Hose ASM
10	3290-379	1	Tie-Cable
11	AU112950	1	Protector-Hose

Hydraulic Hose Assembly 2

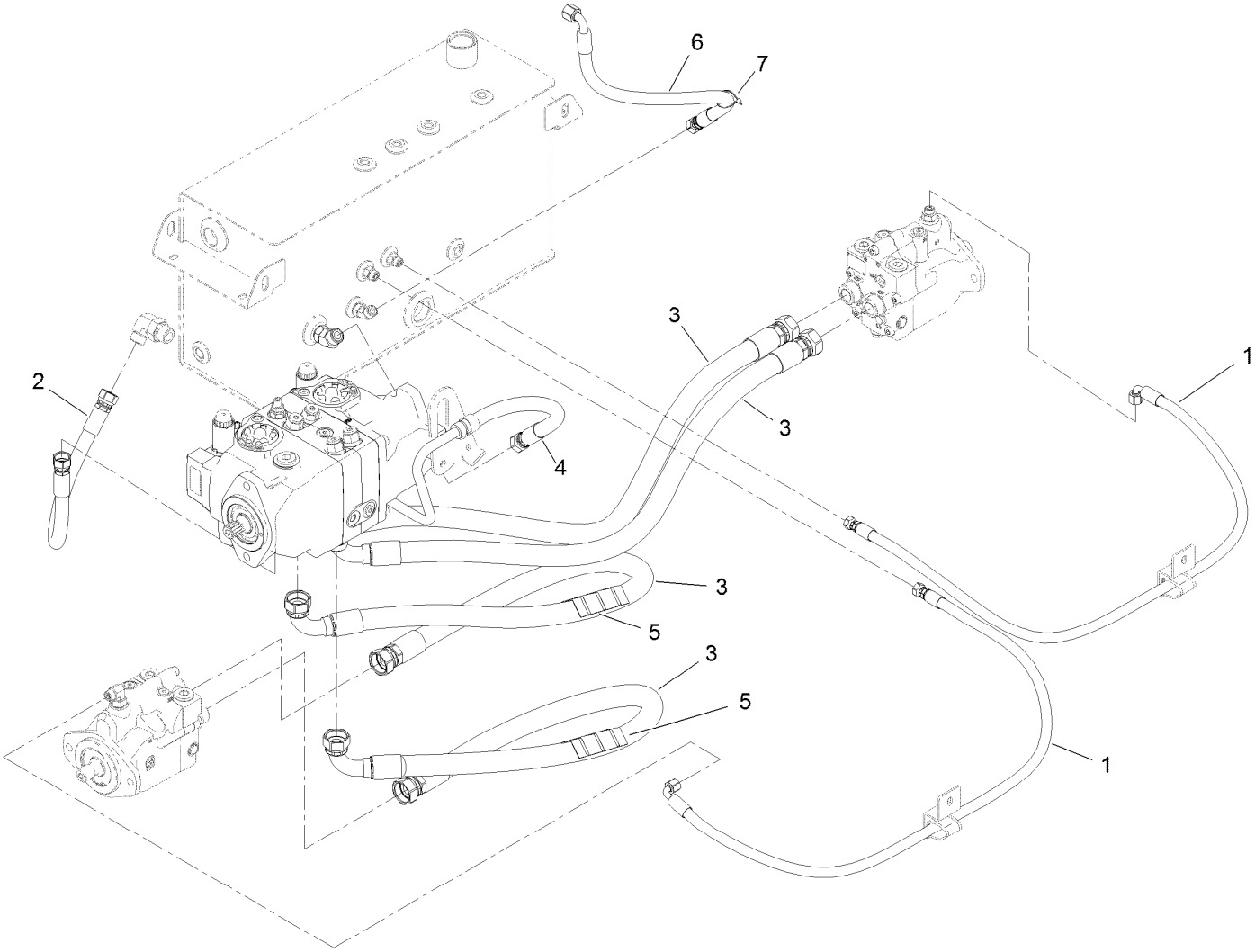

Hydraulic Hose Assembly 2 (continued)

Ref.	Part Number	Qty.	Description
1	100-3919	2	HYD Hose ASM
2	120-3538	1	Hose-HYD
3	132-6470	4	Hose ASM
4	133-2297	1	Tube ASM
5	AU112950	2	Protector-Hose
6	121-1559	1	Hose-HYD
7	3290-378	1	Tie-Cable

Hydraulic Hose Assembly 3

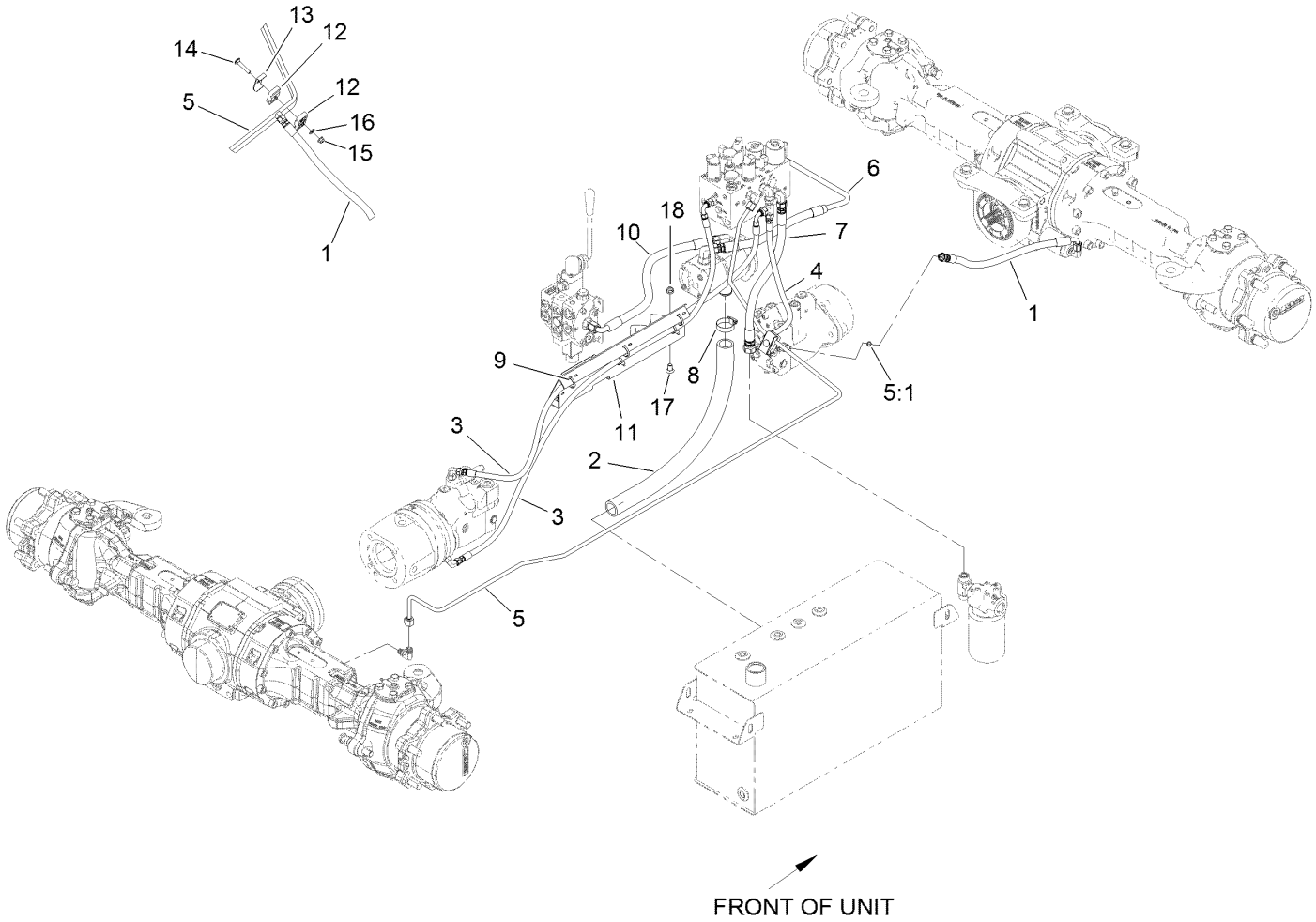

Hydraulic Hose Assembly 3 (continued)

Ref.	Part Number	Qty.	Description
1	69-5490	1	Hose ASM
2	132-6490	1	Hose
3	133-2255	2	Hose ASM
4	133-2259	1	Hose ASM
5	133-2280	1	HYD Tube ASM
5:1	237-22	1	O-Ring
6	136-9709	1	Tube-Hydrualic
7	136-9714	1	Hose ASM
8	2412-111	1	Clamp-Hose, W/Liner
9	3290-378	5	Tie-Cable
10	104-2807	1	Hose-HYD
11	138-8023-03	1	Bracket-Routing
12	56-7972	2	Clamp-Tube
13	119-1419	1	Plate-Clamp
14	3230-4	1	Bolt-CARR
15	104-8300	1	Nut-HF, NI
16	3256-23	1	Washer-Plain
17	3231-21	2	Screw-CARR
18	104-8301	2	Nut-HF, NI

Fuel Pump and Filter Assembly

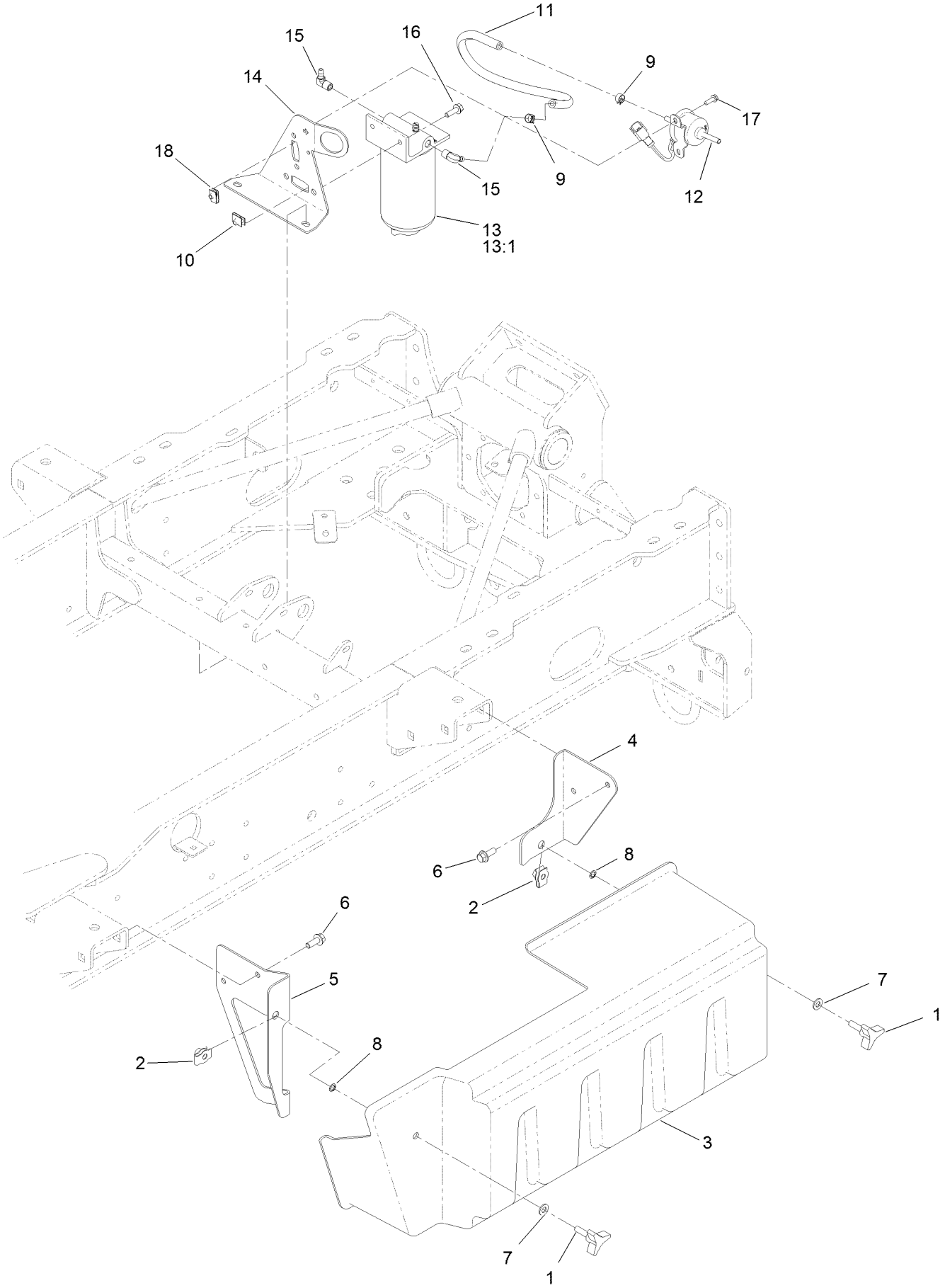

Fuel Pump and Filter Assembly (continued)

Ref.	Part Number	Qty.	Description
1	27-4570	2	Knob-Seat
2	105-4886	2	Nut-Tinnerman
3	136-9742	1	Cover-LH
4	136-9957-01	1	Bracket-Latch, Rear
5	136-9958-01	1	Bracket-Latch, Front
6	3234-42	4	Screw-HHF
7	3256-80	2	Washer-Plain
8	32151-72	2	Ring-Retaining
9	92-2379	2	Clamp-Hose
10	94-2413	2	Nut-U
11	110-4109	1	Hose-Fuel
12	121-5613	1	Pump-Fuel, Electric
13	125-2914	1	Filter-Separator
13:1	125-2915	1	Filter-Fuel/Water Separator
14	136-9728-03	1	Bracket-Support, Fuel
15	353-781	2	Fitting-HYD, 90
16	3234-29	2	Screw-HHF
17	32105-15	2	Screw-HWH
18	107069	2	Clip

Fuel Tank and Line Assembly

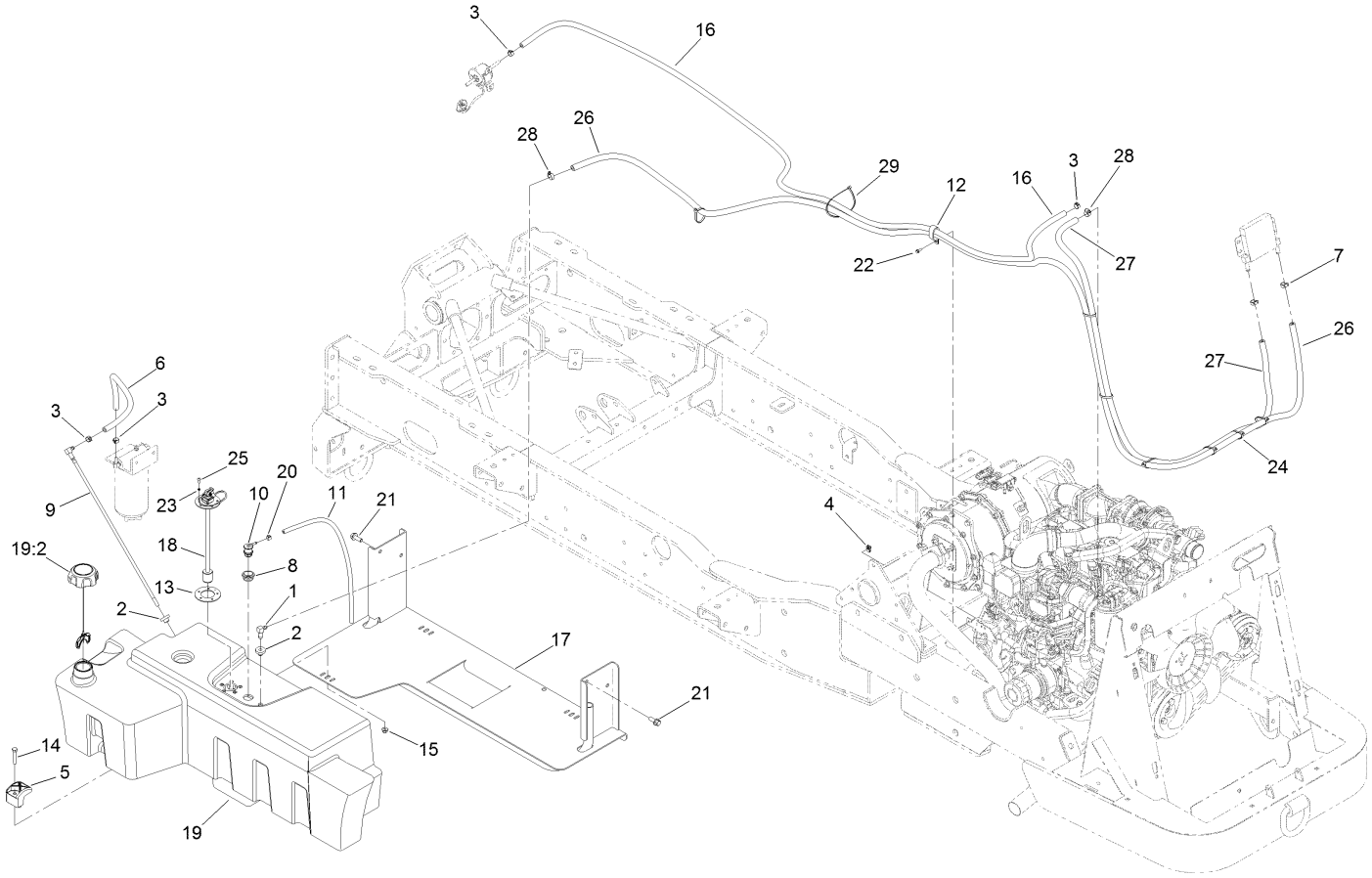

Fuel Tank and Line Assembly (continued)

Ref.	Part Number	Qty.	Description
1	46-6550	1	Fitting-Elbow, 90 DEG
2	46-6560	2	Bushing
3	92-2379	4	Clamp-Hose
4	107069	1	Clip
5	107-4543	3	Clamp
6	110-4109	1	Hose-Fuel
7	103-1988	2	Clamp-Hose
8	114-0284	1	Grommet
9	114-3836	1	Pipe-Stand
10	114-0285	1	Valve-Rollover
11	119-8149	1	Hose-Fuel
12	120-1959	1	Clamp
13	121-1707	1	Gasket-Fuel, Viton
14	125-7944	3	Screw-HH
15	130-6655	3	Nut-Flange, NI
16	136-9708	1	Hose-Fuel
17	136-9730-03	1	Support-Tank
18	136-9739	1	Gauge-Fuel, Float
19	136-9740	1	Fuel Tank ASM
19:2	138-3795	1	Fuel Cap ASM
20	2412-80	1	Clamp-Hose
21	3234-42	4	Screw-HHF
22	32105-15	1	Screw-HWH
23	3253-15	5	Washer-Lock
24	3290-378	9	Tie-Cable
25	32122-24	5	Screw-PTH
26	136-9978	1	Hose-Fuel
27	136-9979	1	Hose-Fuel
28	2412-108	2	Clamp-Worm
29	3290-379	1	Tie-Cable

Hood Assembly

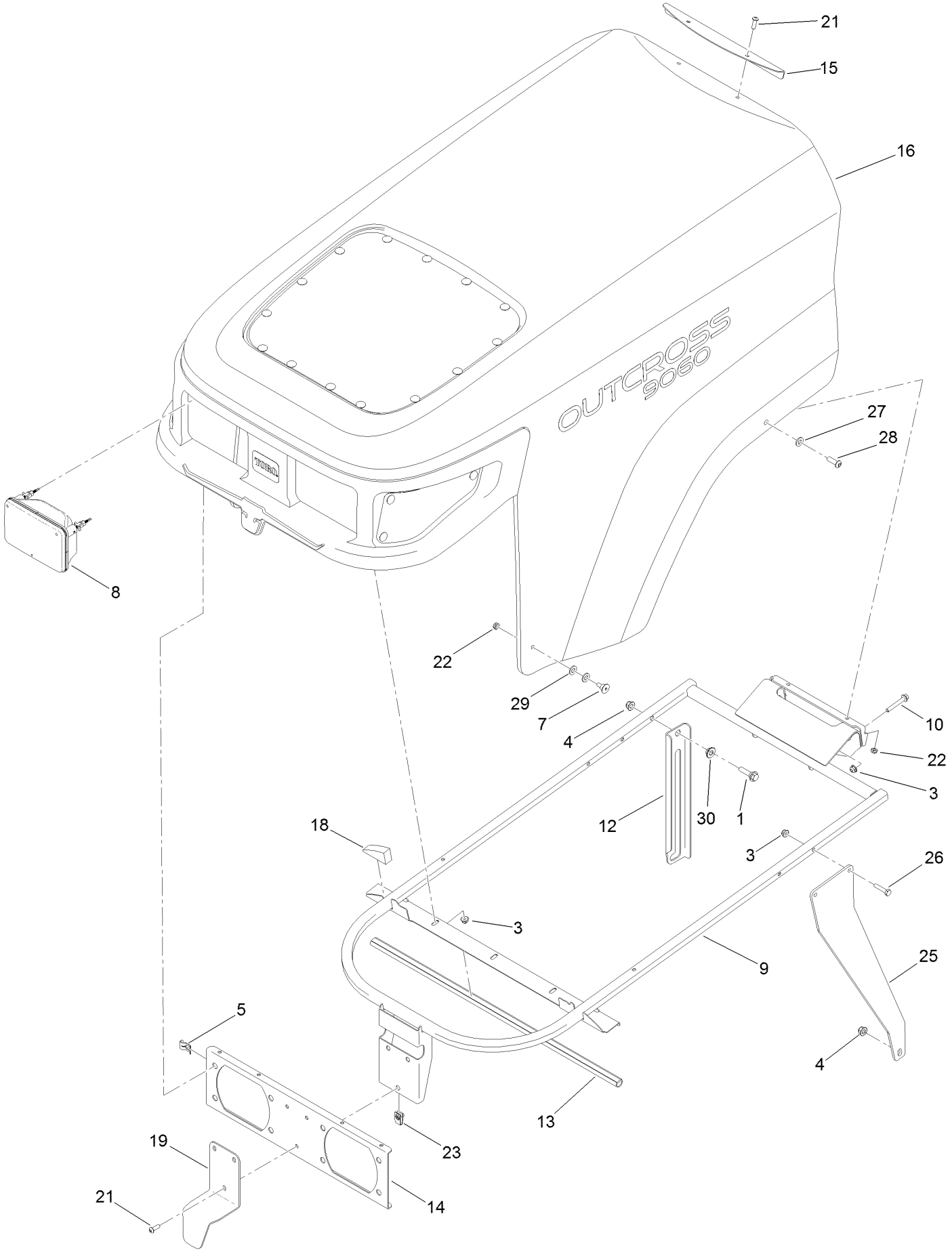

Hood Assembly (continued)

Ref.	Part Number	Qty.	Description
1	322-7	1	Screw-HH
3	104-7201	5	Nut-HF, NI
4	104-8300	1	Nut-HF, NI
5	115-2408	6	Clip-Speed
7	125-1122	2	Screw
8	138-9260	2	Headlight ASM
9	136-9602-03	1	Support-Hood
10	32105-18	2	Screw-HHF
12	138-8279-01	1	Prop-Hood
13	136-9779	1	Seal-Bulb
14	136-9786-03	1	Bracket-Light
15	136-9792-03	1	Bracket-Hood, Rear

Ref.	Part Number	Qty.	Description
16	138-4138	1	Hood ASM
18	138-2013	2	Block-Foam
19	138-3755-03	1	Bracket-Lift, Hood
21	3274-69	8	Screw-HSBH
22	3296-56	4	Nut-Lock, NI
23	107069	3	Clip
25	138-8145-03	2	Brace-Hood
26	321-8	4	Screw-HH
27	3256-70	2	Washer-Flat
28	3274-104	2	Screw-HSBH
29	3256-22	4	Washer-Flat
30	125-9249	1	Spacer-Coupler, Rubber

Hood Assembly No. 138-4138

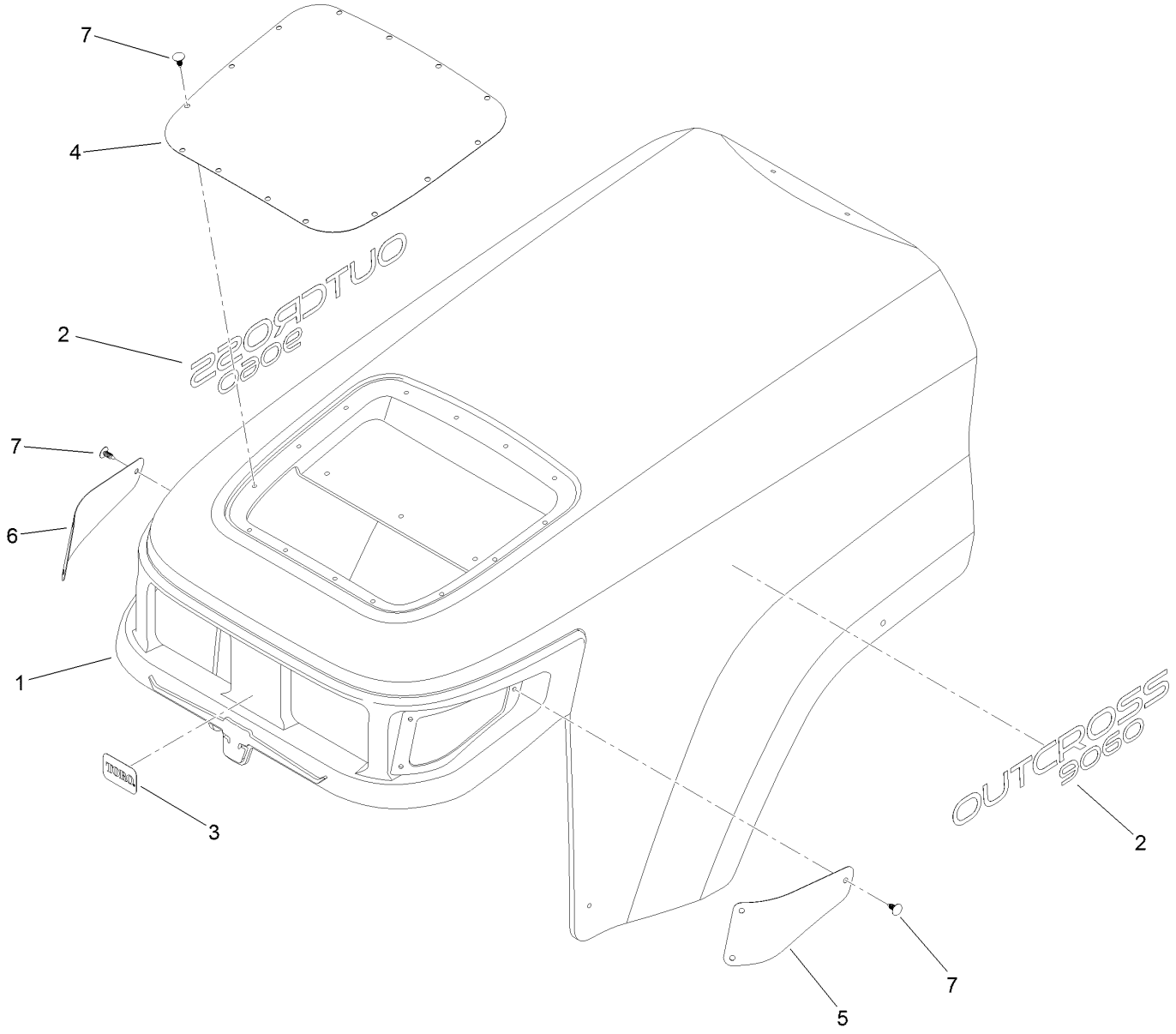

Hood Assembly No. 138-4138 (continued)

Ref.	Part Number	Qty.	Description
1	136-9856	1	Hood ASM
2	136-9884	2	Decal
3	138-4105	1	Decal-Logo
4	136-9611-03	1	Screen
5	138-3756-03	1	Screen-Side, LH
6	138-3784-03	1	Screen-Side, RH
7	117-2382	20	Plug-Plastic

Air Intake Assembly

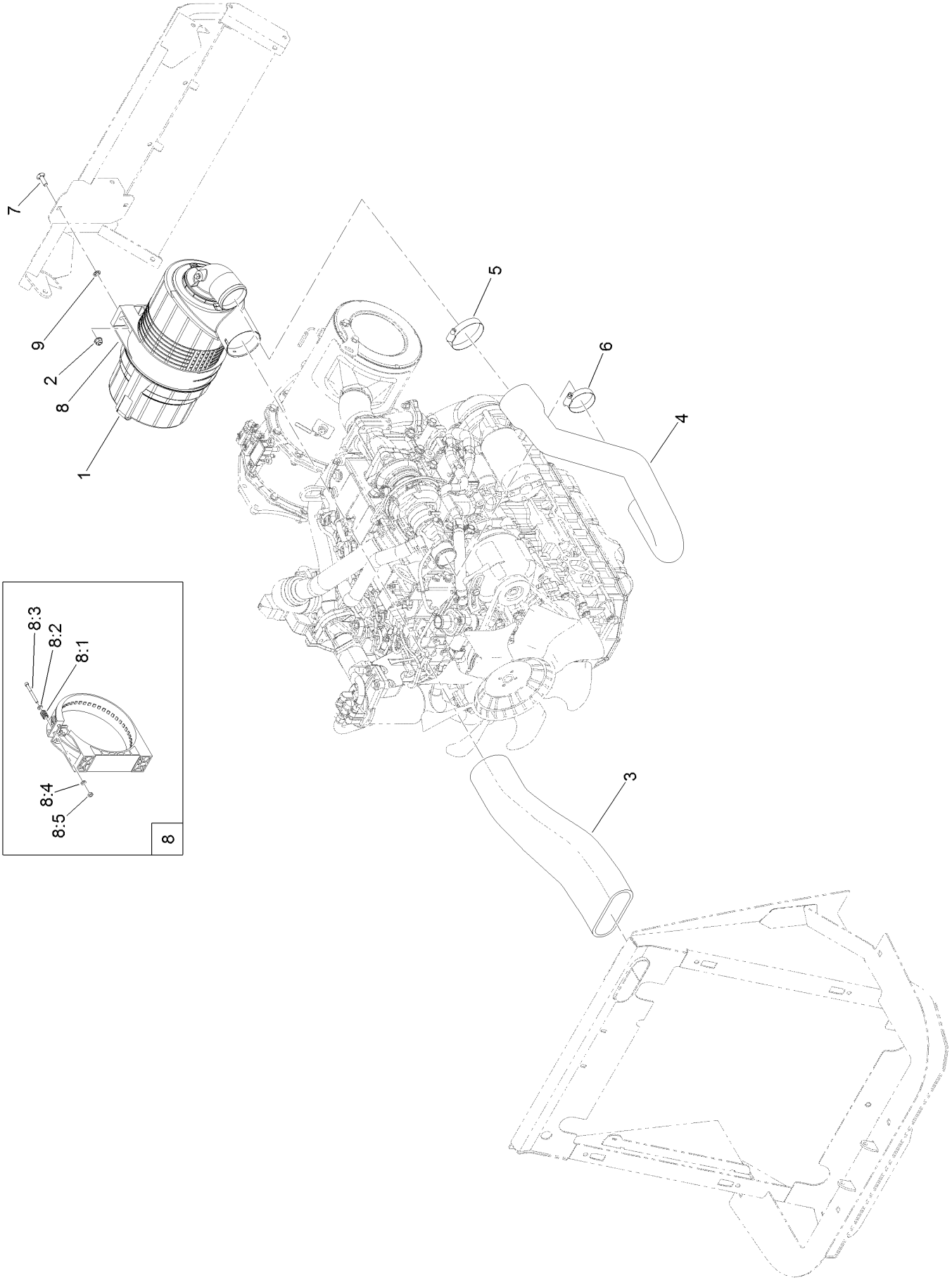

Air Intake Assembly (continued)

Ref.	Part Number	Qty.	Description
1	99-5410	1	Air Cleaner ASM
2	104-8300	2	Nut-HF, NI
3	136-5195	1	Hose-Air
4	136-5196	1	Hose-Air
5	2412-125	1	Clamp-Hose
6	2412-130	1	Clamp-Hose
7	3230-22	2	Screw-CARR

Ref.	Part Number	Qty.	Description
8	99-5414	1	Strap-Cleaner, Air
8:1	108-1512	2	Spring
8:2	3256-22	2	Washer-Flat
8:3	33113-050	2	Screw-HH
8:4	33093-00	2	Washer-Flat
8:5	33023-00	2	Nut-Lock
9	117-2749	2	Nut-Push

Air Cleaner Assembly No. 99-5410

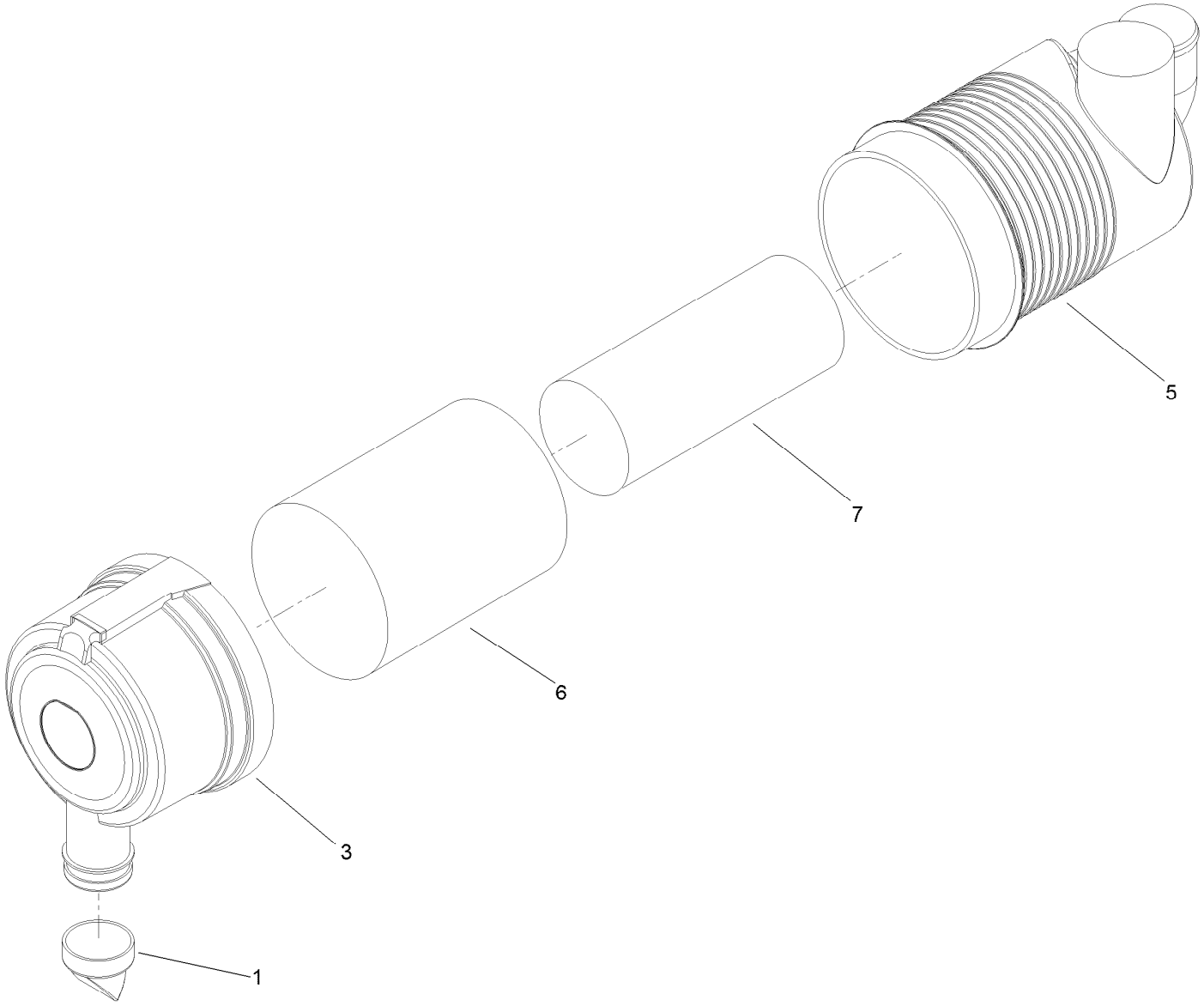

Air Cleaner Assembly No. 99-5410 (continued)

Ref.	Part Number	Qty.	Description
1	104-4258	1	Valve-Vacuator
3	104-4259	1	Cover
5		1	Body ASM ●
6	108-3814	1	Filter-Air
7	108-3816	1	Filter-Air

● Not serviced separately

Screen Assembly

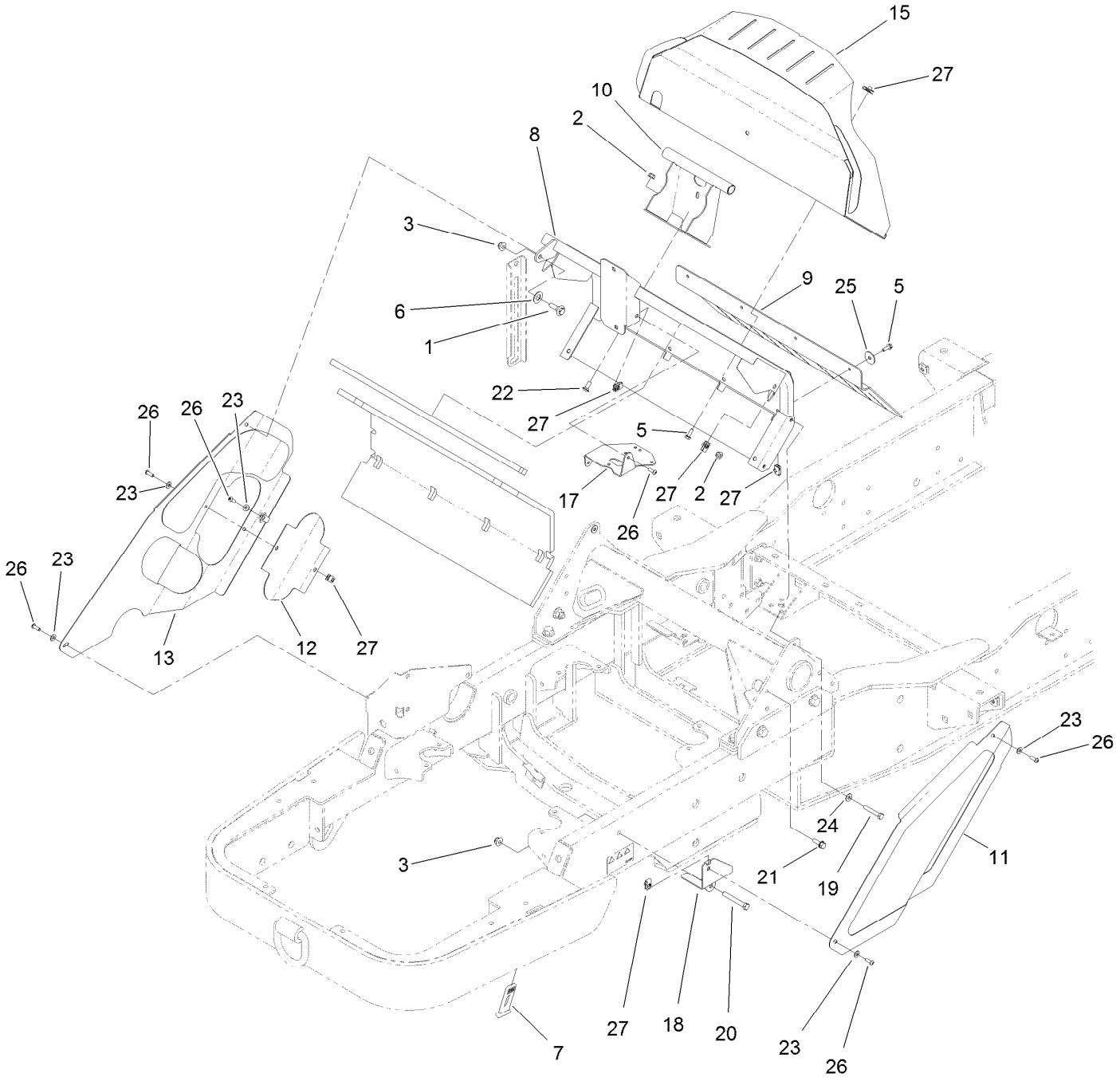

Screen Assembly (continued)

Ref.	Part Number	Qty.	Description
1	614672	1	Screw-Shoulder, HWH
2	104-8300	5	Nut-HF, NI
3	104-8301	2	Nut-HF, NI
5	115-5103	8	Screw-HHF
6	117-1240	1	Washer
7	131-8402	2	Strap-Down, Hold
8	138-8130-03	1	Mount-Mid
9	138-1857	1	Flap-Air
10	138-8124-03	1	Hinge
11	138-1862-03	1	Shield-LH
12	138-1865-03	1	Shield-Exhaust
13	138-3791	1	Shield-RH

Ref.	Part Number	Qty.	Description
15	138-1870-03	1	Shield-Dash
17	138-1876	1	Bracket-Sensor
18	138-1877-01	1	Bracket-Shield
19	322-10	2	Screw-HH
20	323-13	1	Screw-HH
21	3234-29	1	Screw-HHF
22	3230-23	1	Bolt-CARR
23	3256-1	7	Washer-Flat
24	3256-2	2	Washer-Flat
25	3256-57	4	Washer-Flat
26	3274-69	9	Screw-HSBH
27	107069	16	Clip

Battery Assembly

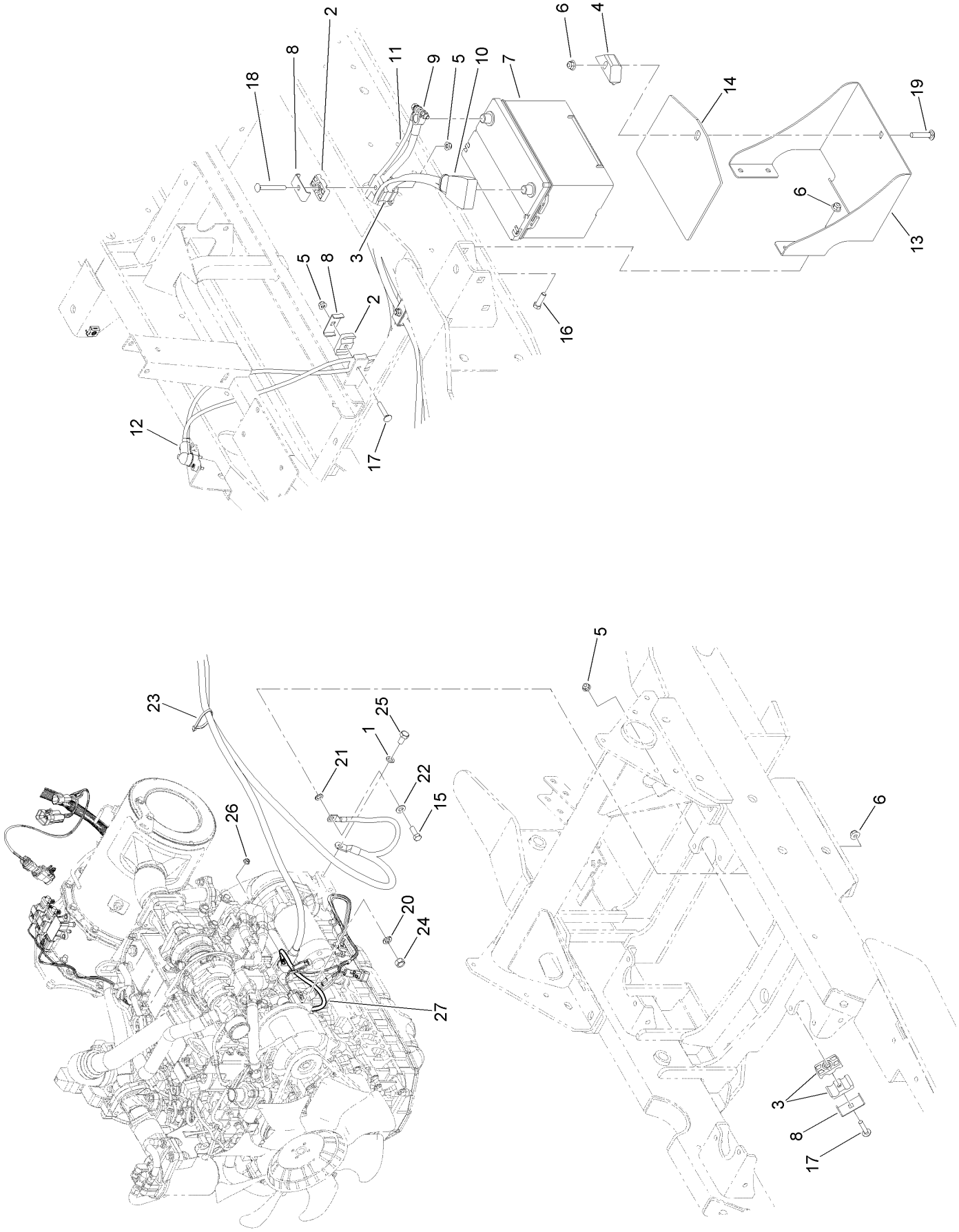

Battery Assembly (continued)

Ref.	Part Number	Qty.	Description
1	48-9590	1	Washer-Lock
2	56-7972	4	Clamp-Tube
3	56-7977	6	Clamp-Tube
4	138-6335	1	Retainer-Battery
5	104-8300	4	Nut-HF, NI
6	104-8301	6	Nut-HF, NI
7	106-5190	1	Battery, 660 CCA W/O Electrolyte
8	119-1419	4	Plate-Clamp
9	122-0709	1	Cable-Battery, Negative
10	122-0710	1	Cable-Battery, Positive
11	122-0969	1	Cable-Battery, Negative
12	122-0970	1	Cable-Battery, Positive
13	133-7817-01	1	Support-Battery
14	136-5338	1	Mat-Battery
15	323-6	1	Screw-HH
16	323-7	4	Screw-HH
17	3230-5	2	Bolt-CARR
18	3230-9	1	Screw-CARR
19	3231-6	1	Screw-CARR
20	3230-6	1	Bolt-CARR
21	3255-9	1	Washer-Lock
22	3256-24	1	Washer-Flat
23	3290-378	1	Tie-Cable
24	33004-00	2	Nut-HF
25	33115-020	1	Screw-HH
26	33003-00	1	Nut-HF
27	122-0071	1	Cable-Battery, Positive

Engine Wire Harness Assembly

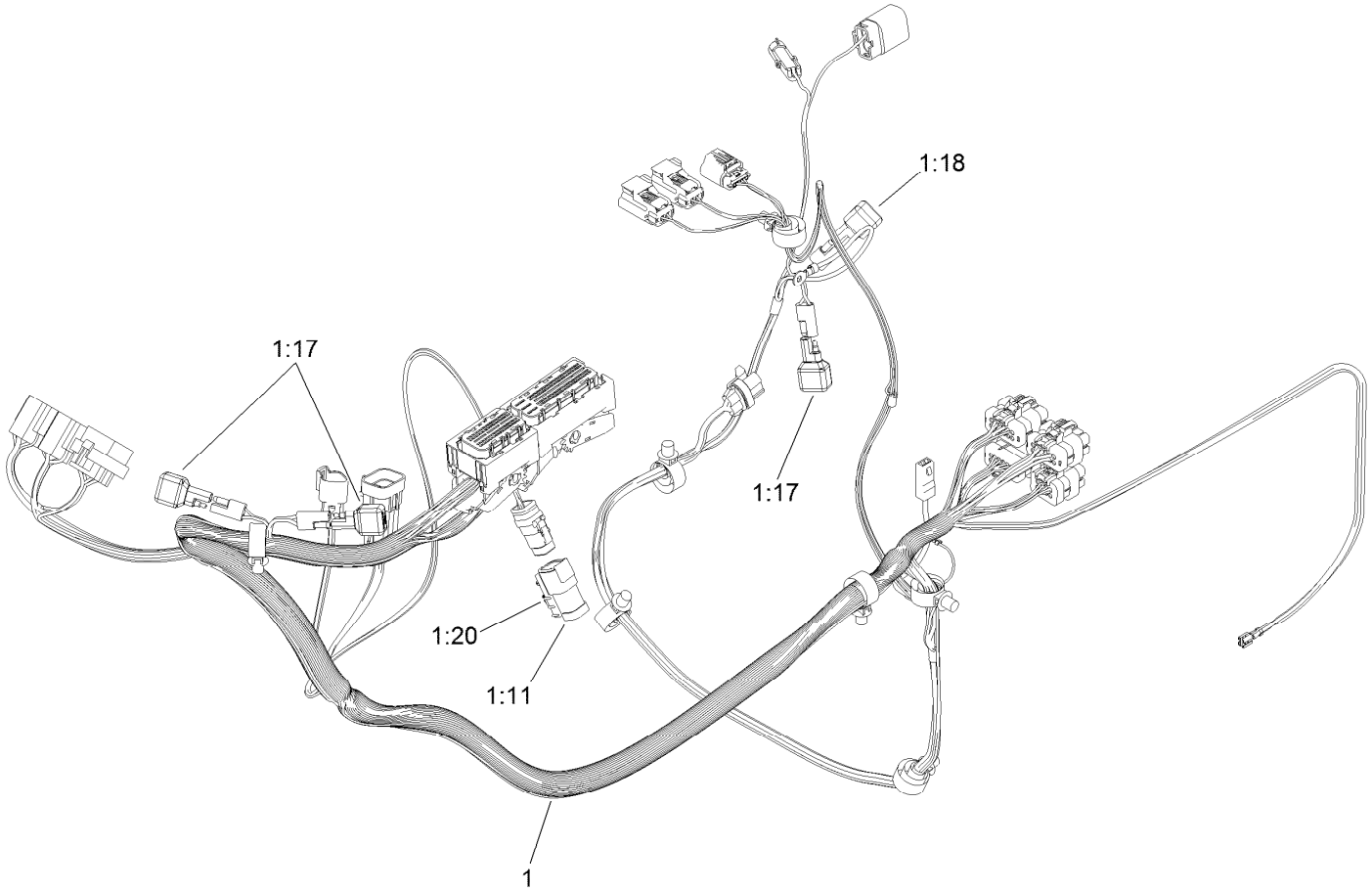

Engine Wire Harness Assembly (continued)

Ref.	Part Number	Qty.	Description
1	122-0921	1	Harness-Wire, Engine
1:11	32160-359	1	Connector (6M)
1:17	100-4918	3	Diode
1:18	121-8891	1	Resistor (1.6K Ohm)
1:20	32180-103	1	Clip-Connector

Platform Wire Harness Assembly

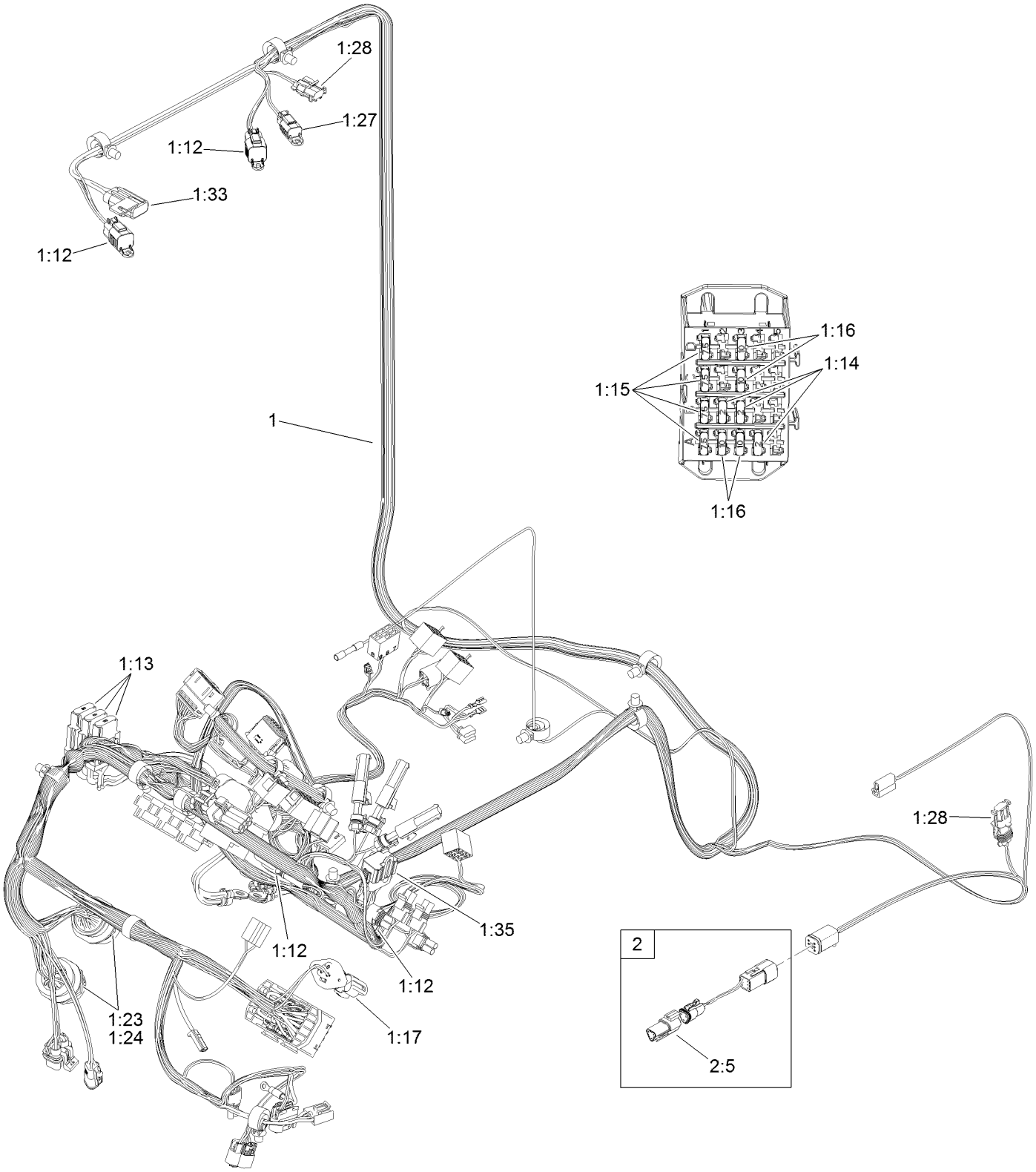

Platform Wire Harness Assembly (continued)

Ref.	Part Number	Qty.	Description
1	122-1668	1	Harness-Wire, Platform
1:12	32180-156	4	Cap-Plug, 6 Way
1:13	114-3342	3	Fuse-Maxi, 60 Amp
1:14	121-8861	3	Fuse-Mini Blade, 2 Amp
1:15	121-8865	4	Fuse-Mini Blade, 7.5 Amp
1:16	121-8866	4	Fuse-Mini Blade, 10 Amp
1:17	32180-089	1	Cap-Plug, 3 Way
1:23	32180-175	2	Nut-Connector
1:24	32180-174	2	Washer-Lock
1:27	32180-091	1	Cap-Dust, 2 Way
1:28	32180-056	1	Cap
1:33	32180-019	1	Cover-Fuse, Single
1:35	32180-270	1	Cap-Dust, 12 Way
2	122-1047	1	Harness-Wire, Can Terminator
2:5	32180-043	1	Resistor-120 Ohm

Frame Wire Harness Assembly

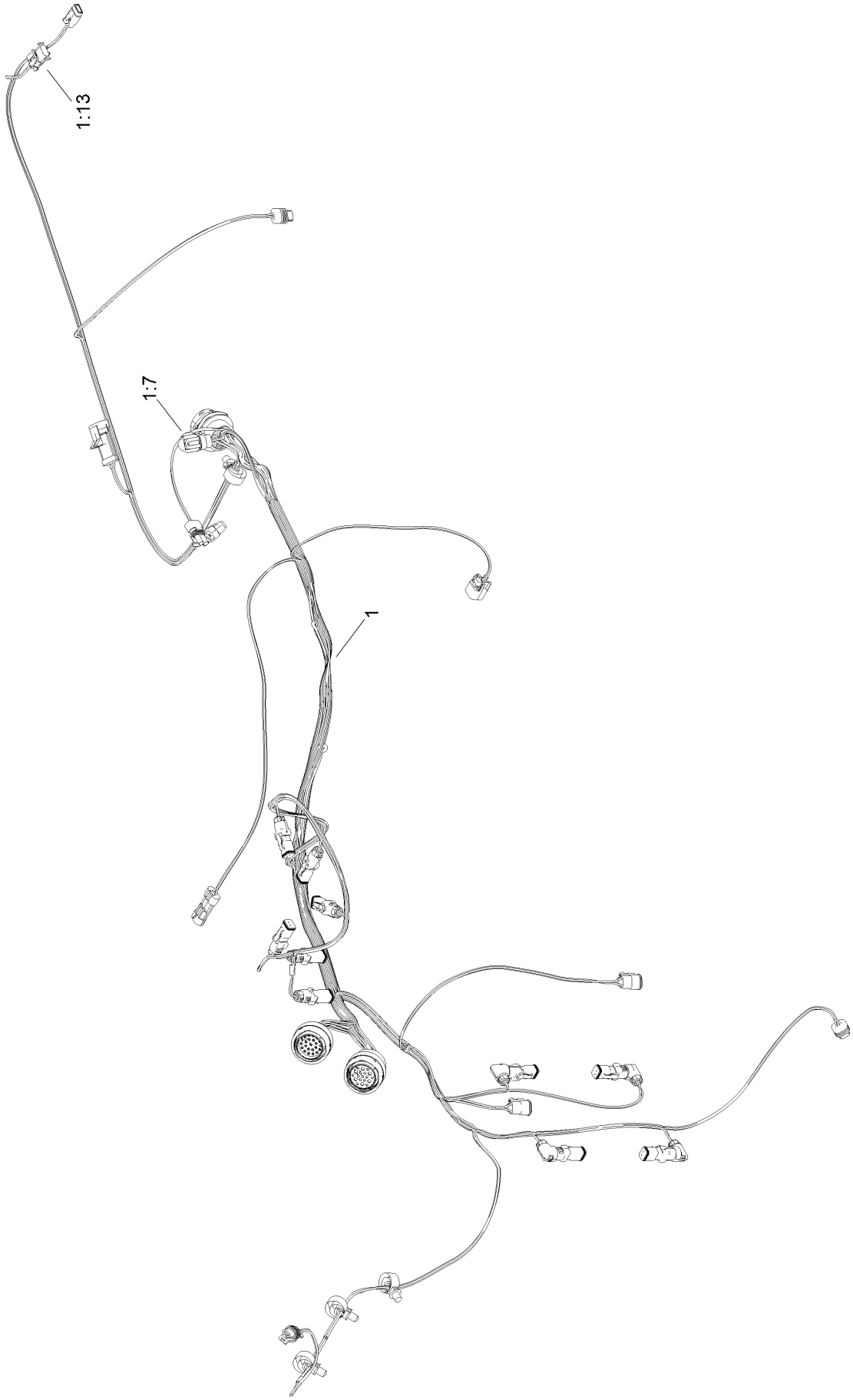

Frame Wire Harness Assembly (continued)

Ref.	Part Number	Qty.	Description
1	122-0923	1	Harness-Wire, Frame
1:7	32180-089	1	Cap-Plug, 3 Way
1:13	32180-056	1	Cap

Headlight Wire Harness Assembly

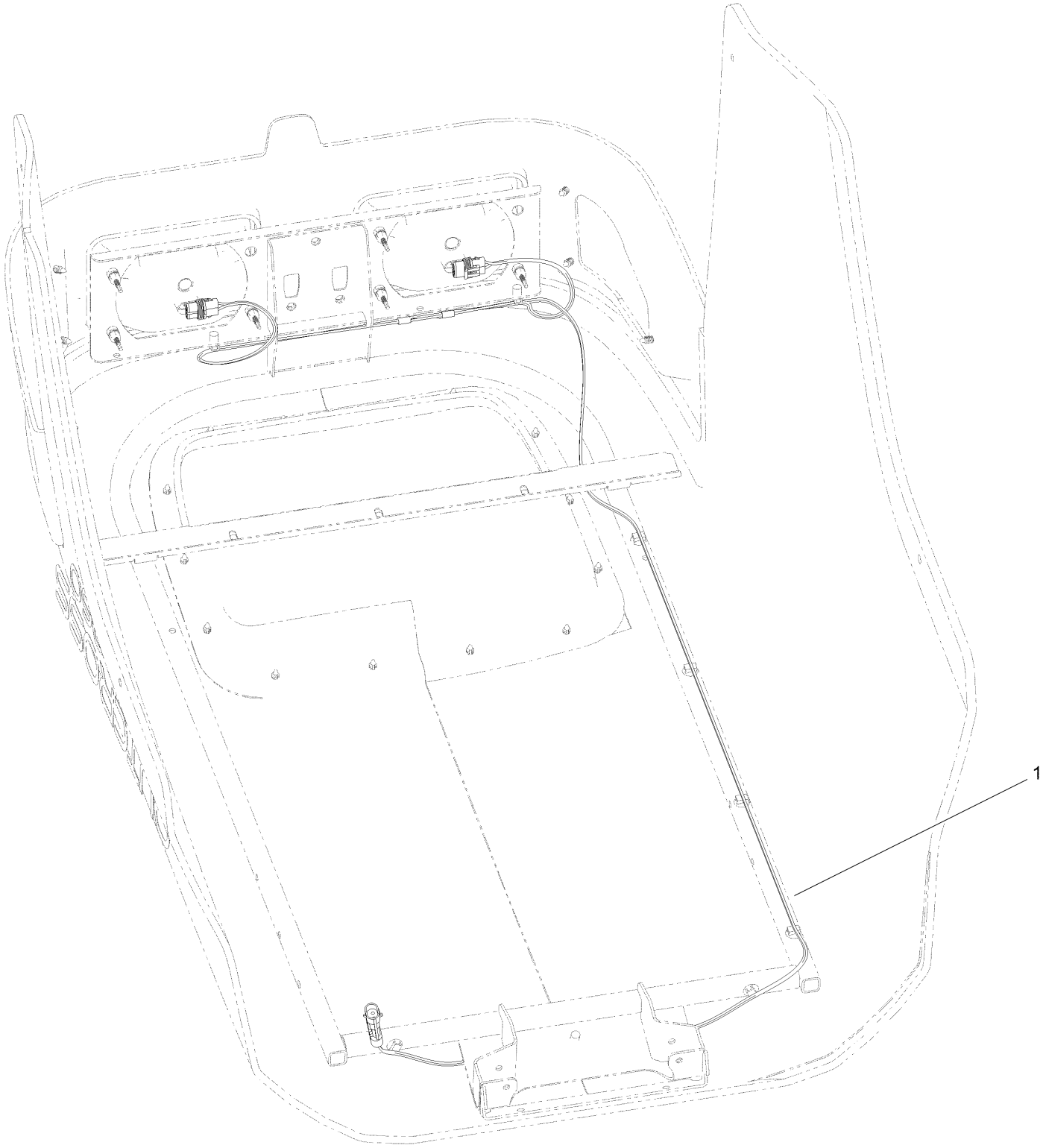

Headlight Wire Harness Assembly (continued)

Ref.	Part Number	Qty.	Description
1	122-1732	1	Harness-Wire, Headlight

Cylinder Block Assembly

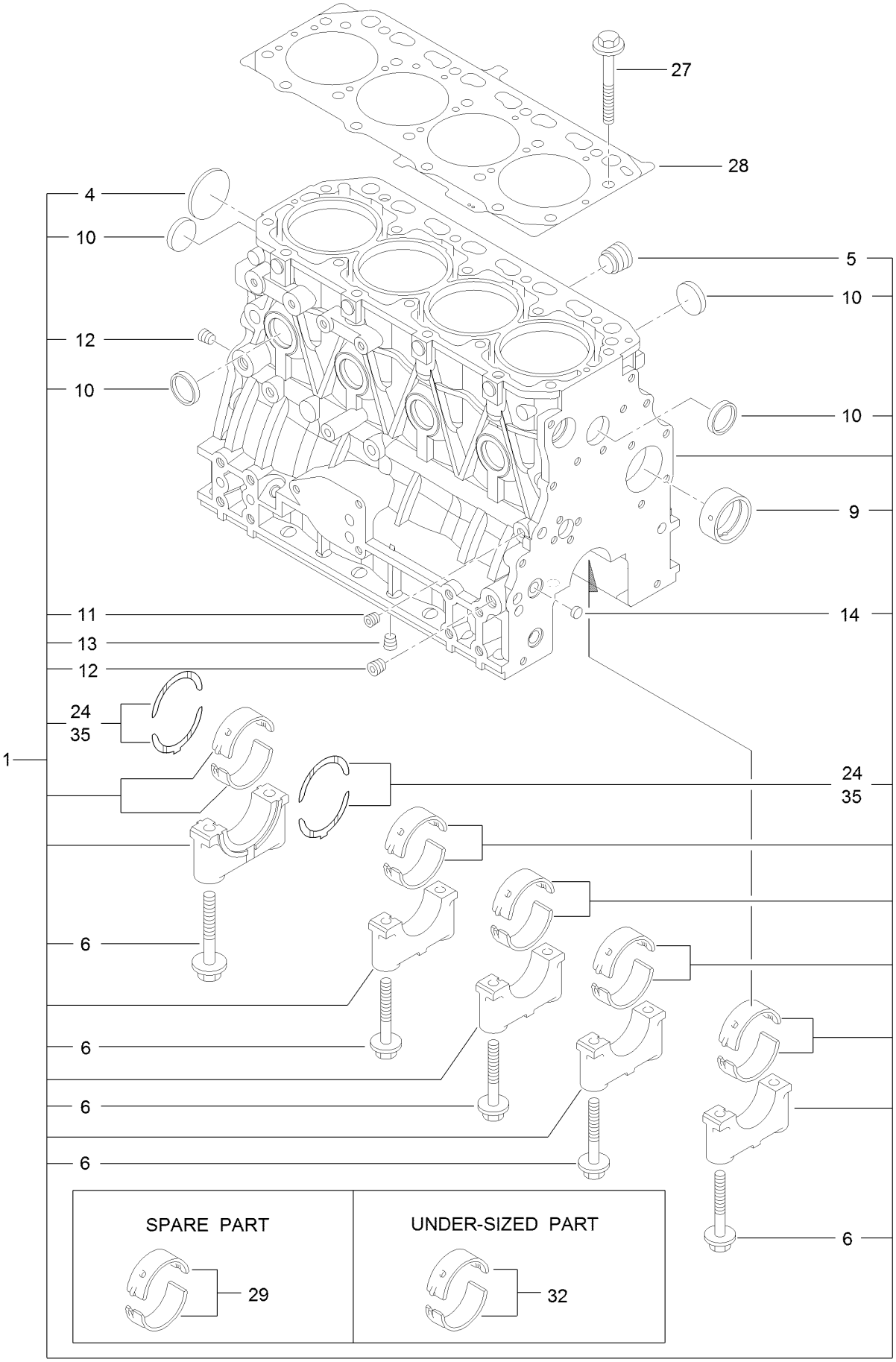

Cylinder Block Assembly (continued)

Ref.	Part Number	Qty.	Description
1	127-3127	1	Cylinder Block ASM
4	125-6980	1	Plug
5	125-7170	1	Plug
6	125-7007	10	Bolt
9	125-7108	1	Bushing
10	138-7824	8	Plug
11	125-6969	1	Plug
12	125-6973	2	Plug
13	125-6973	1	Plug
14	125-7237	1	Plug
24	125-7010	2	Metal-Thrust
27	125-7006	18	Bolt
28	127-3126	1	Gasket-Head, Cylinder
29	125-6981	5	Metal-Main
32	125-7009	5	Metal-Main (0.25)
35	125-7011	1	Metal-Thrust (0.25)

Gear Housing Assembly

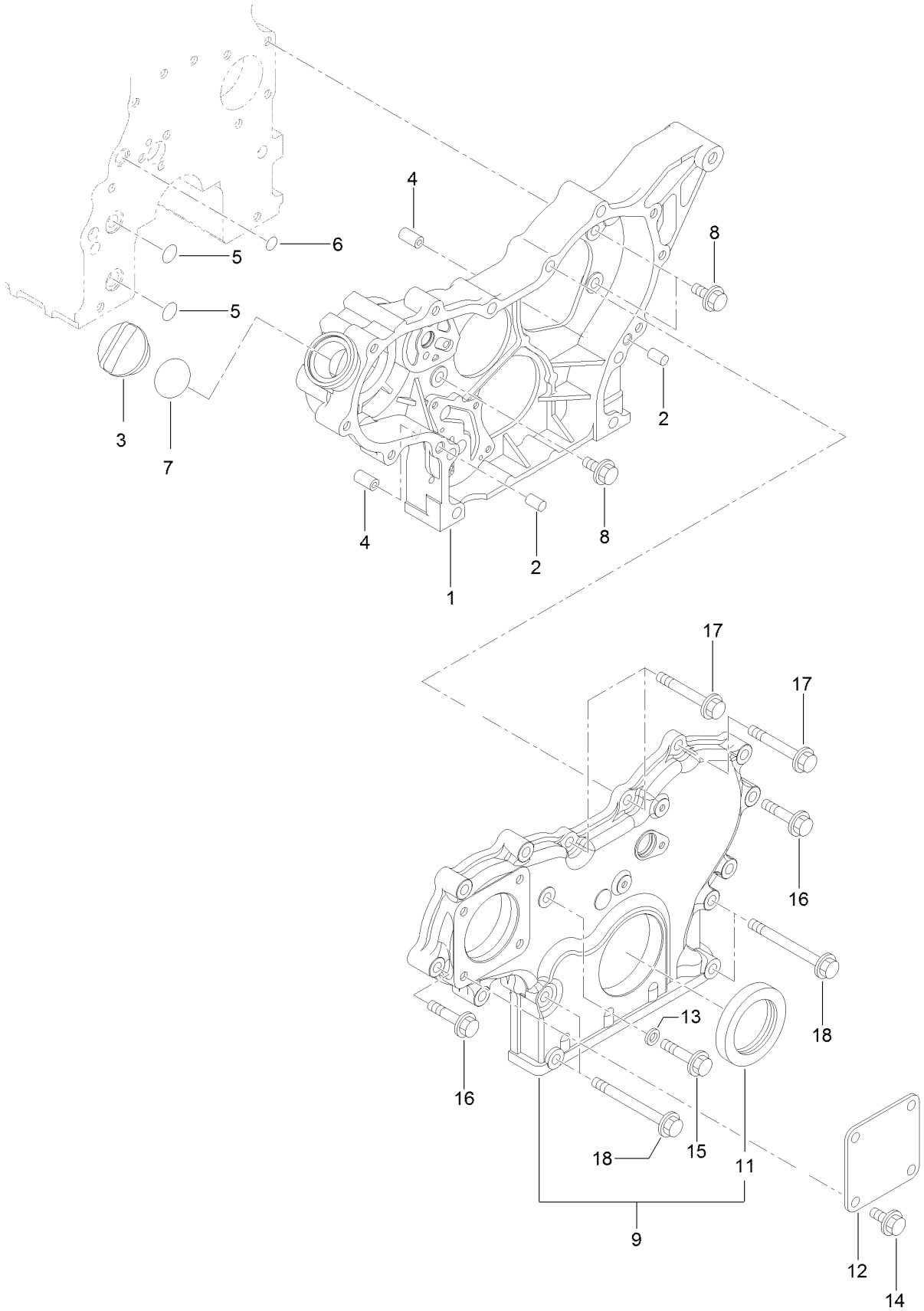

Gear Housing Assembly (continued)

Ref.	Part Number	Qty.	Description
1	138-7825	1	Case-Gear
2	125-6995	2	Pin
3	125-6972	1	Cover-Filler
4	125-7107	2	Pipe
5	125-6909	2	O-Ring
6	127-2973	1	O-Ring
7	125-7197	1	O-Ring
8	125-7214	3	Bolt
9	127-3024	1	Gearcase Cover ASM
11	125-6944	1	Seal-Oil
12	125-6977	1	Cover
13	125-7174	1	Washer-Seal
14	125-7214	4	Bolt
15	125-7217	1	Bolt
16	125-7218	7	Bolt
17	125-7222	3	Bolt
18	125-7224	4	Bolt

Flywheel Housing and Oil Sump Assembly

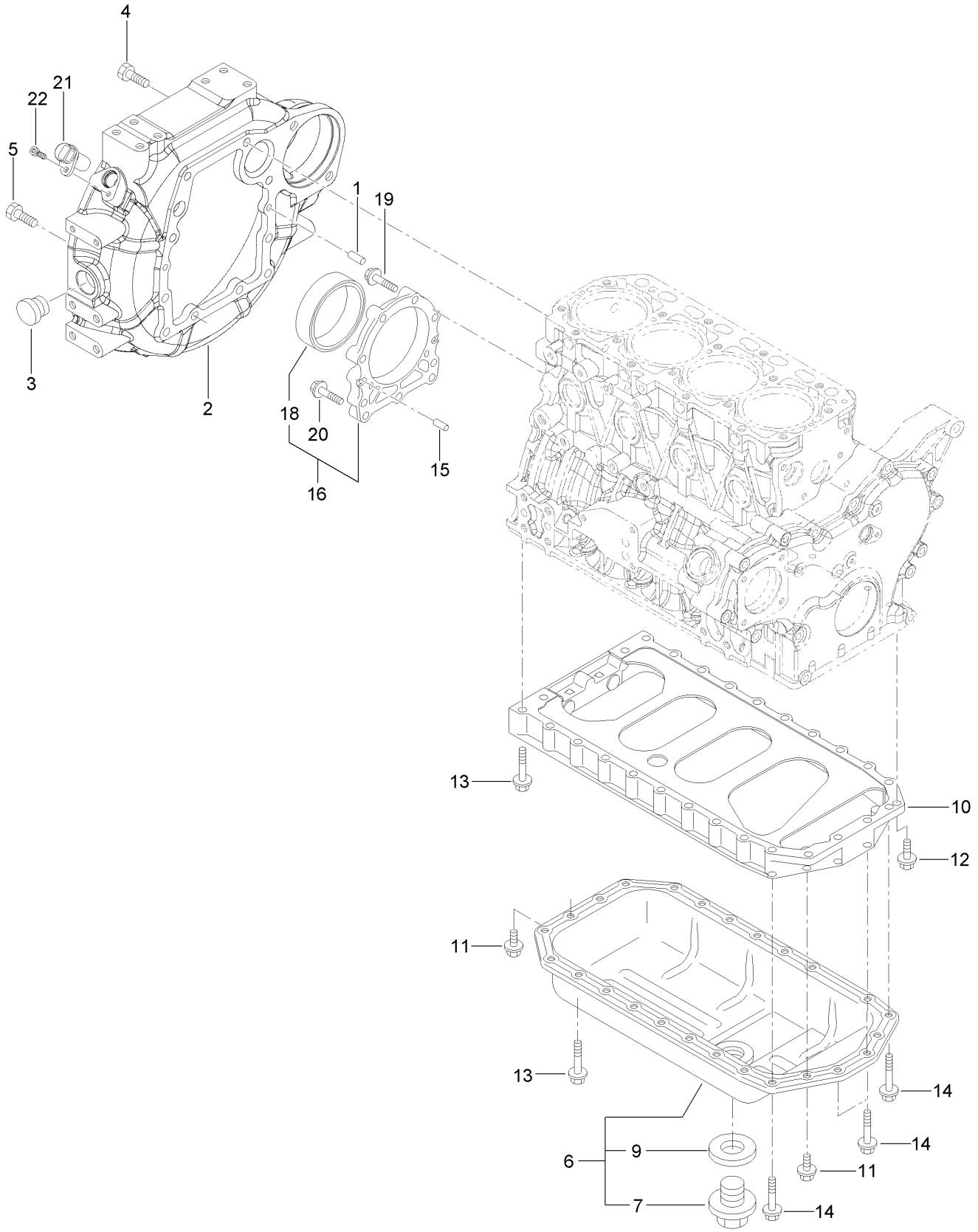

Flywheel Housing and Oil Sump Assembly (continued)

Ref.	Part Number	Qty.	Description
1	125-6995	2	Pin
2	127-3025	1	Housing-Flywheel
3	125-6910	1	Cap
4	125-7226	6	Bolt
5	125-7227	4	Bolt
6	138-7826	1	Oil Pan ASM
7	125-6912	1	Plug-Drain
9	125-7177	1	Washer-Seal
10	125-7035	1	Spacer
11	125-7214	4	Bolt
12	125-7215	2	Bolt
13	125-7219	20	Bolt
14	125-7220	4	Bolt
15	125-6995	2	Pin
16	135-4011	1	Case ASM
18	138-7827	1	Seal, Oil
19	125-7045	6	Bolt
20	125-7217	3	Bolt
21	127-3062	1	Sensor-Rev, Flywheel
22	127-3184	1	Bolt

Cylinder Head and Cover Assembly

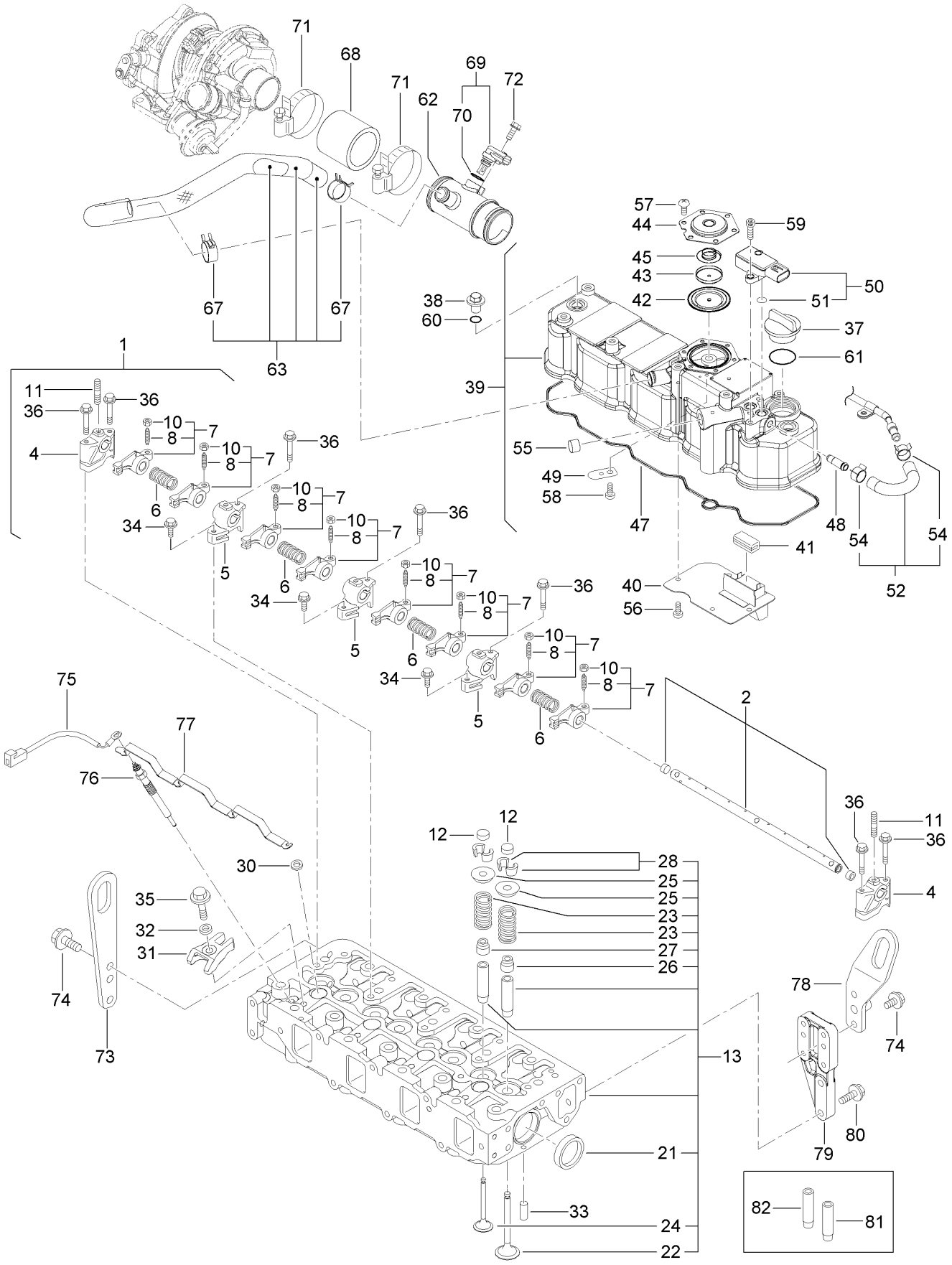

Cylinder Head and Cover Assembly (continued)

Ref.	Part Number	Qty.	Description
1	127-3005	1	Shaft ASM
2	127-3006	1	Shaft
4	127-2974	2	Support
5	127-2975	3	Support
6	127-2995	4	Spring
7	127-2989	8	Arm-Rocker
8	125-7013	8	Screw-Adjust, Valve
10	125-7014	8	Nut
11	127-3759	3	Stud
12	127-2996	8	Cap-Valve
13	127-3132	1	Cylinder Head ASM
21	125-7240	2	Plug
22	127-2990	4	Valve
23	127-3012	8	Spring
24	127-2994	4	Valve
25	127-3013	8	Retainer-Spring
26	127-2986	4	Seal-Stem, Valve
27	127-3027	4	Seal-Stem, Valve
28	127-3186	8	Pin-Cotter
30	127-3021	4	Gasket-Injector
31	127-3028	4	Retainer-Injector
32	127-2980	4	Washer-Injector
33	125-7184	2	Pin-Spring
34	125-7215	3	Bolt
35	125-7217	4	Bolt
36	125-7220	7	Bolt
37	125-6972	1	Cover-Filler
38	125-6974	3	Knob
39	138-7828	1	Head Cover ASM
40	127-2988	1	Plate
41	125-7012	1	Baffle
42	125-6959	1	Diaphragm
43	125-6960	1	Plate
44	125-6961	1	Plate-Breather
45	125-6962	1	Spring-Diaphragm
47	127-3106	1	Gasket-Cover
48	127-3026	1	Joint
49	125-6994	1	Spring
50	127-3029	1	Sensor-Pressure
51	127-3032	2	O Ring-Sensor, Pressure
52	127-3040	1	Hose ASM
54	127-3041	2	Clip-Hose
55	125-6913	1	Plug
56	125-7186	4	Screw
57	125-7186	6	Screw
58	125-7186	1	Screw
59	127-3184	2	Bolt
60	138-7829	3	O-Ring
61	125-7197	1	O-Ring
62	137-5169	1	Breather Joint
63	138-7830	1	Breather Hose ASM
67	125-7040	1	Clip-Hose
68	127-3133	1	Hose-Intake
69	127-3030	1	Sensor-Temp, Air
70	127-3033	1	O-Ring
71	125-7190	1	Clamp-Hose
72	125-7208	1	Bolt
73	125-7111	1	Lifter
74	100-6928	1	Bolt
75	131-2704	1	Harness-Wire
76	127-2991	1	Plug-Glow
77	127-3123	1	Connector-Glow Plug
78	138-7868	1	Lifter-Engine
79	138-7869	1	Spacer-Lifter
80	125-7215	1	Bolt
81	127-2979	1	Guide
82	127-2997	1	Guide-Valve

Suction Manifold Assembly

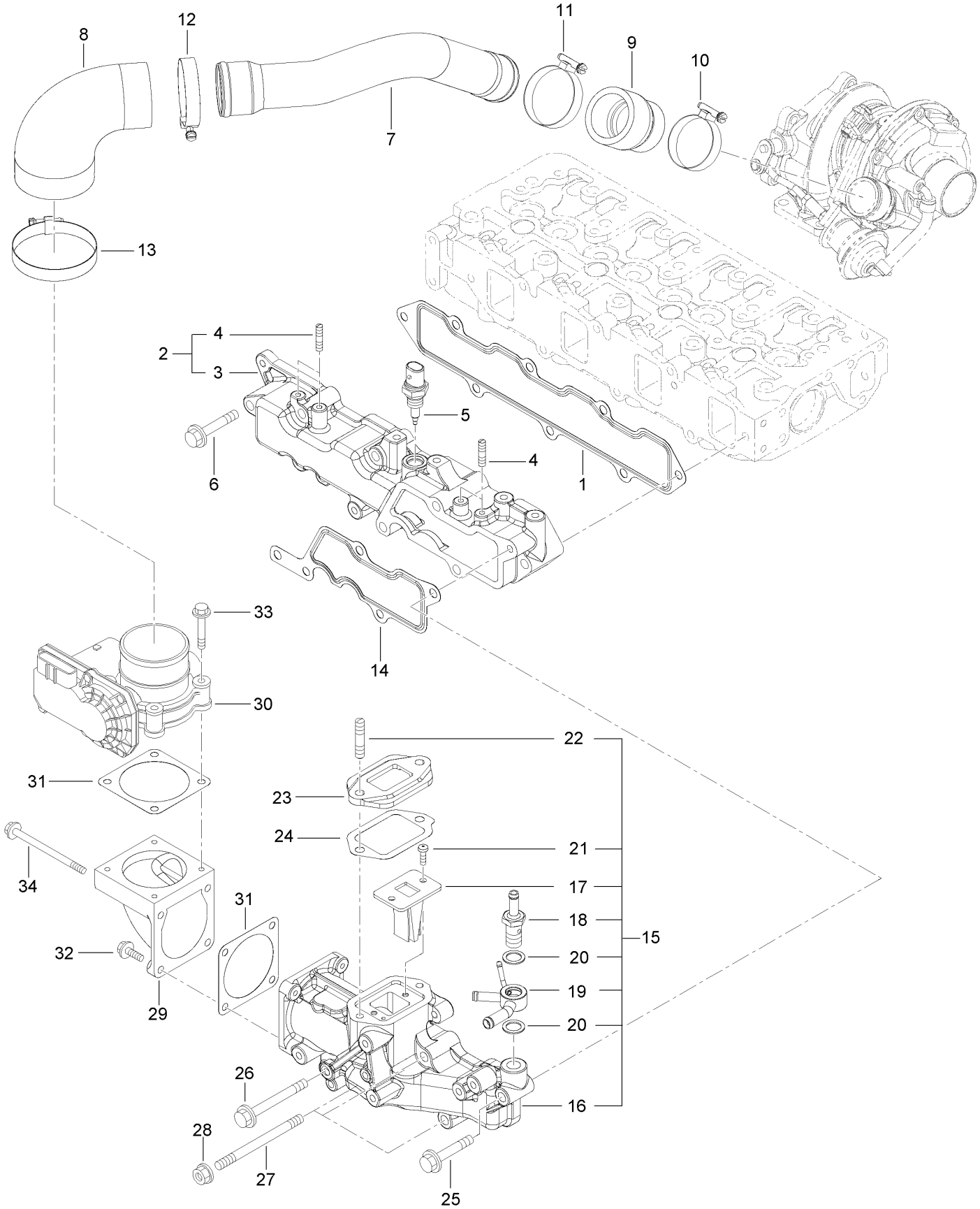

Suction Manifold Assembly (continued)

Ref.	Part Number	Qty.	Description
1	127-3107	1	Gasket-Manifold, Intake
2	127-3135	1	Intake Manifold ASM
3	127-3134	1	Manifold-Intake
4	127-3180	4	Stud
5	137-5167	1	Sensor-Temperature, Air
6	125-7220	6	Bolt
7	127-3152	1	Duct-Suction
8	127-3096	1	Joint-Rubber
9	127-3153	1	Joint-Rubber
10	125-7189	1	Clamp-Hose
11	127-3170	1	Clamp-Hose
12	125-7190	1	Clamp-Hose
13	127-3171	1	Clamp-Hose
14	127-3034	1	Gasket-Collector
15	127-3093	1	Intake Collector ASM
16	127-3092	1	Collector-Intake
17	127-3139	1	Valve-Reed
18	127-3080	1	Joint-Hose
19	127-3081	1	Joint-Hose
20	127-3166	2	Washer-Seal
21	127-3168	2	Screw
22	138-7831	2	Stud, M8X 35
23	127-3045	1	Spacer-Valve, E G R
24	127-3046	1	Gasket-E G R
25	127-3178	1	Bolt
26	127-3178	1	Bolt
27	127-3182	3	Stud
28	125-7229	3	Nut
29	127-3035	1	Bend-Inlet
30	127-3036	1	Body-Throttle
31	127-3037	2	Gasket-Throttle
32	125-7209	2	Bolt
33	125-7211	4	Bolt
34	127-3177	2	Bolt

Exhaust Manifold Assembly

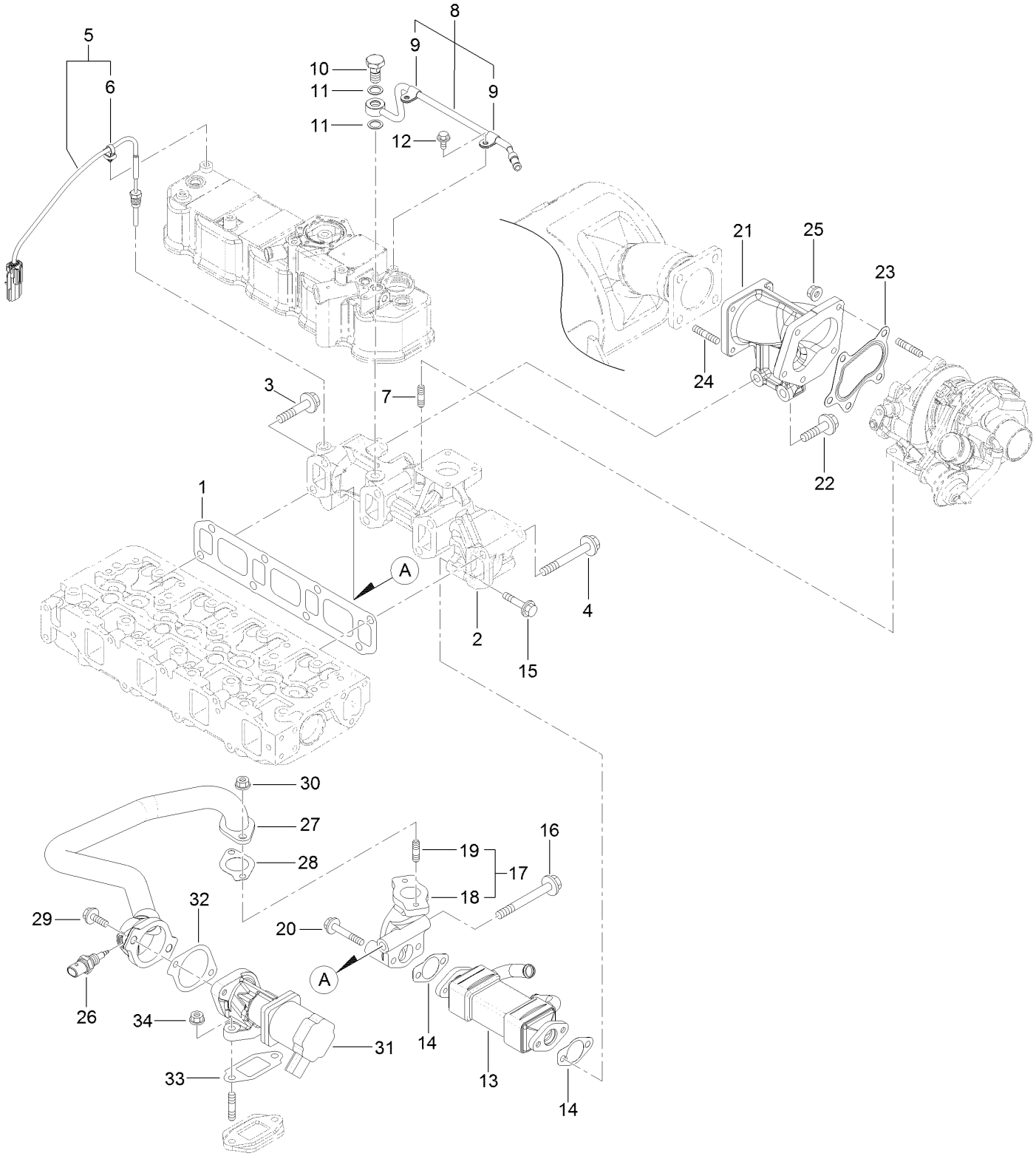

Exhaust Manifold Assembly (continued)

Ref.	Part Number	Qty.	Description
1	127-3108	1	Gasket-Manifold, Exhaust
2	127-3136	1	Manifold-Exhaust
3	135-4013	1	Bolt
4	135-4014	7	Bolt
5	127-3140	1	Sensor-Temp, Exhaust
6	127-3087	1	Band-Clip
7	125-7043	4	Stud
8	127-3038	1	Exhaust Pipe ASM
9	127-3173	2	Clamp
10	127-3039	1	Bolt-Joint, Pipe
11	127-3174	2	Gasket
12	125-7206	2	Bolt
13	127-3042	1	Cooler-E G R
14	127-3043	2	Gasket-Cooler, E G R
15	135-4015	2	Bolt
16	135-4016	1	Bolt
17	127-3048	1	E G R Pipe ASM
18	127-3049	1	Pipe-Out, E G R
19	125-7043	2	Stud
20	125-7220	2	Bolt
21	138-7832	1	Pipe, Exhaust
22	133-6792	2	Bolt
23	125-7071	1	Gasket
24	125-6906	4	Stud
25	125-7229	5	Nut
26	137-5168	1	Sensor-Gas Temp, E G R
27	127-3109	1	E G R Pipe ASM
28	127-3016	1	Gasket
29	125-7215	2	Bolt
30	125-7229	2	Nut
31	127-3110	1	Valve-E G R
32	127-3050	1	Gasket-Intake Valve, E G R
33	127-3051	1	Gasket-Out Valve, E G R
34	125-7229	2	Nut

Diesel Particulate Filter Assembly

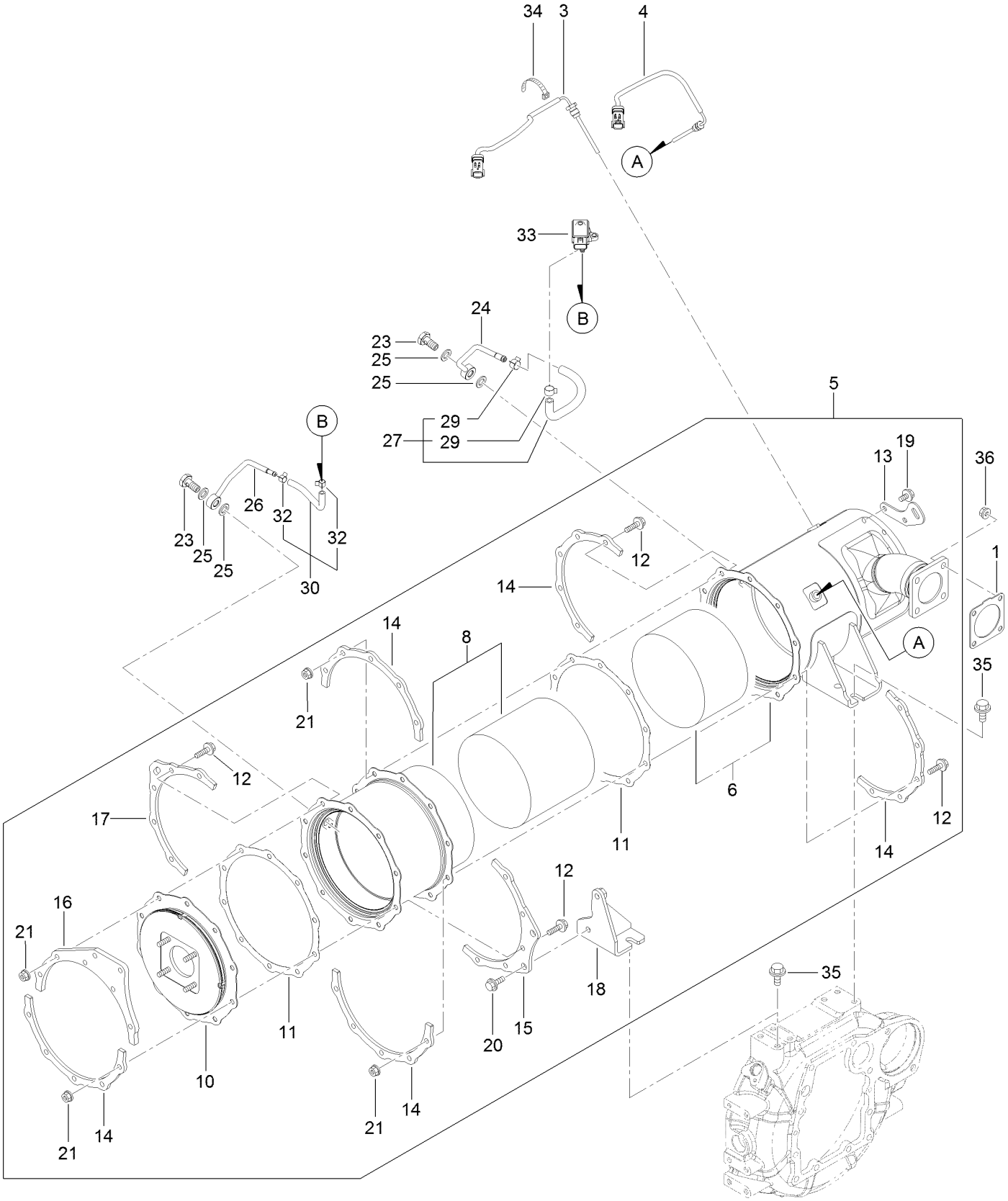

Diesel Particulate Filter Assembly (continued)

Ref.	Part Number	Qty.	Description
1	127-3019	1	Gasket
3	127-4764	1	Sensor-Temp, Exhaust
4	127-4765	1	Sensor-Temp, Exhaust
5	138-7833	1	D P F ASM
6	138-7834	1	Case-Doc
8	137-5170	1	Case-Filter, Soot
10	127-3143	1	Flange-Outlet
11	127-3162	2	Gasket-D P F
12	127-3055	20	Bolt
13	127-3144	1	Lifter-D P F
14	127-3145	5	Stiffener-D P F, A
15	137-5171	1	Stiffener-D P F, B
16	137-5172	1	Stiffener-D P F, C
17	127-3147	1	Stiffener-D P F, C
18	138-7835	1	Stay, Dpf

Ref.	Part Number	Qty.	Description
19	125-7213	2	Bolt
20	131-2740	2	Bolt
21	125-7229	20	Nut
23	127-3039	2	Bolt-Joint, Pipe
24	127-3164	1	Exhaust Pressure Pipe ASM
25	127-3056	4	Gasket-Sensor
26	127-3165	1	Exhaust Pressure Pipe ASM
27	138-8256	1	Exhaust Hose ASM
29	127-3057	2	Clip-Hose
30	138-8257	1	Exhaust Press Hose ASM
32	127-3058	2	Clip-Hose
33	127-3060	1	Sensor-Pressure
34	127-3124	1	Band
35	130-7444	4	Bolt
36	125-7229	4	Nut

Camshaft and Driving Gear Assembly

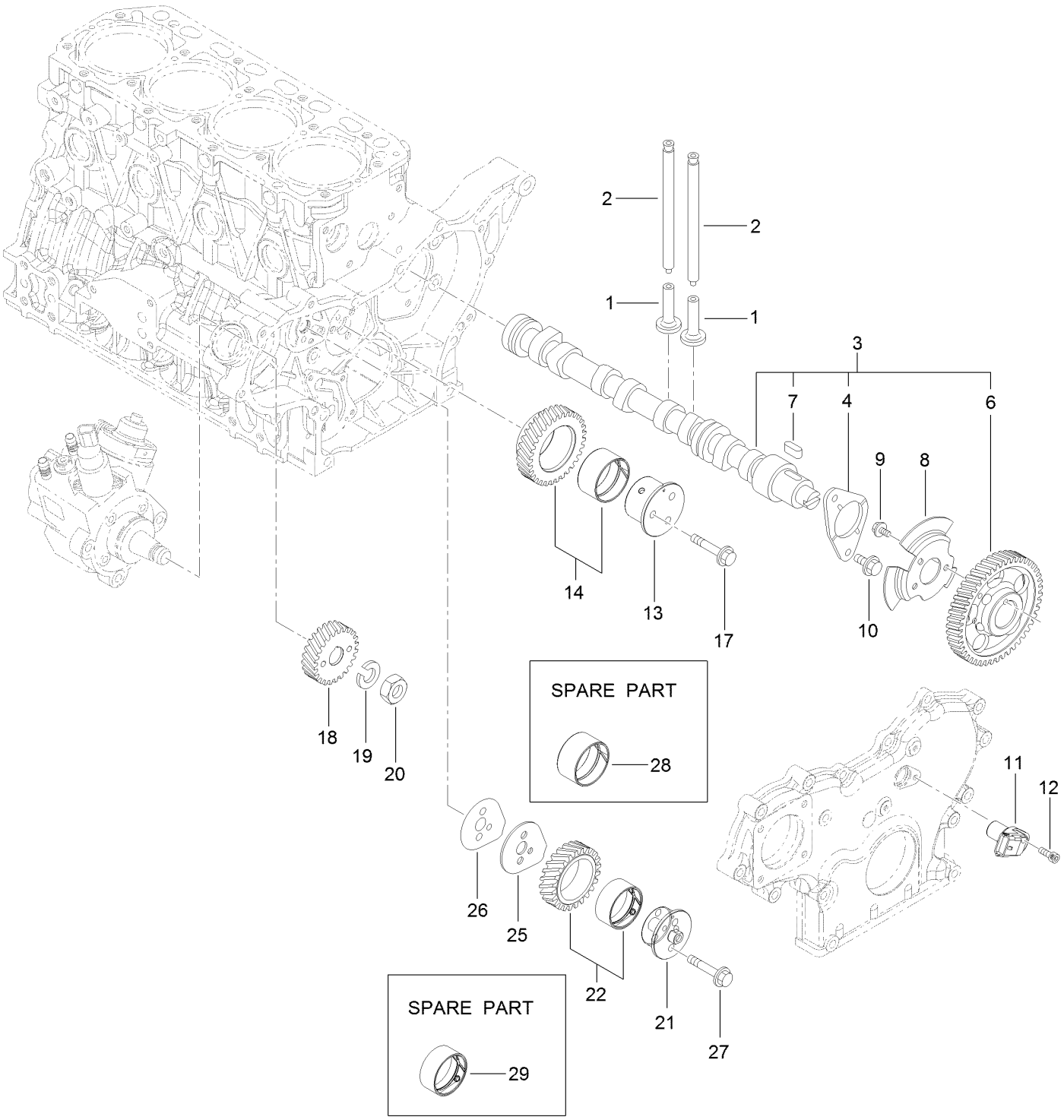

Camshaft and Driving Gear Assembly (continued)

Ref.	Part Number	Qty.	Description
1	125-7016	8	Tappet
2	125-7017	8	Rod-Push
3	127-3113	1	Camshaft ASM
4	125-7008	1	Metal-Thrust
6	127-3052	1	Gear-Camshaft
7	125-7185	1	Key
8	127-3053	1	Pulser-Camshaft
9	125-7205	3	Bolt
10	125-7213	2	Bolt
11	127-3054	1	Sensor-Rev, Gear
12	127-3184	1	Bolt
13	127-3063	1	Shaft-Idle, Gear A
14	127-3066	1	Idle Gear A ASM
17	125-7219	3	Bolt
18	127-3070	1	Gear-Pump, Supply
19	127-3167	1	Washer-Spring
20	127-3185	1	Nut-Lock
21	127-3064	1	Shaft-Idle, Gear B
22	127-3067	1	Idle Gear B ASM
25	127-3068	1	Plate-Idle, Shaft
26	127-3069	1	Gasket-Idle, Shaft B
27	125-7218	2	Bolt
28	125-6927	1	Bushing
29	127-3065	1	Bushing

Turbine Assembly

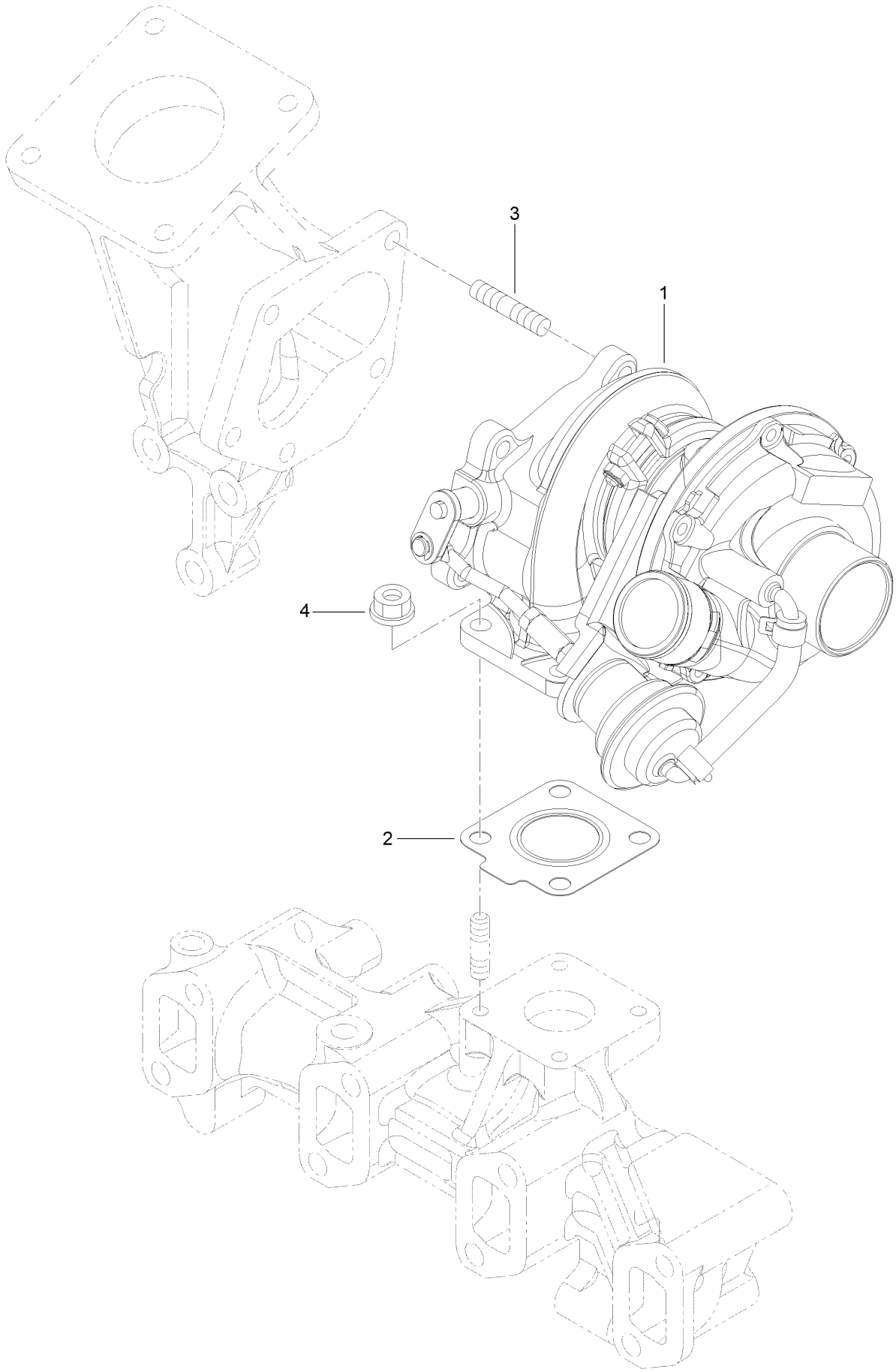

Turbine Assembly (continued)

Ref.	Part Number	Qty.	Description
1	138-7836	1	Turbocharger
2	125-7070	1	Gasket
3	125-6906	5	Stud
4	125-7229	4	Nut

Crankshaft and Piston Assembly

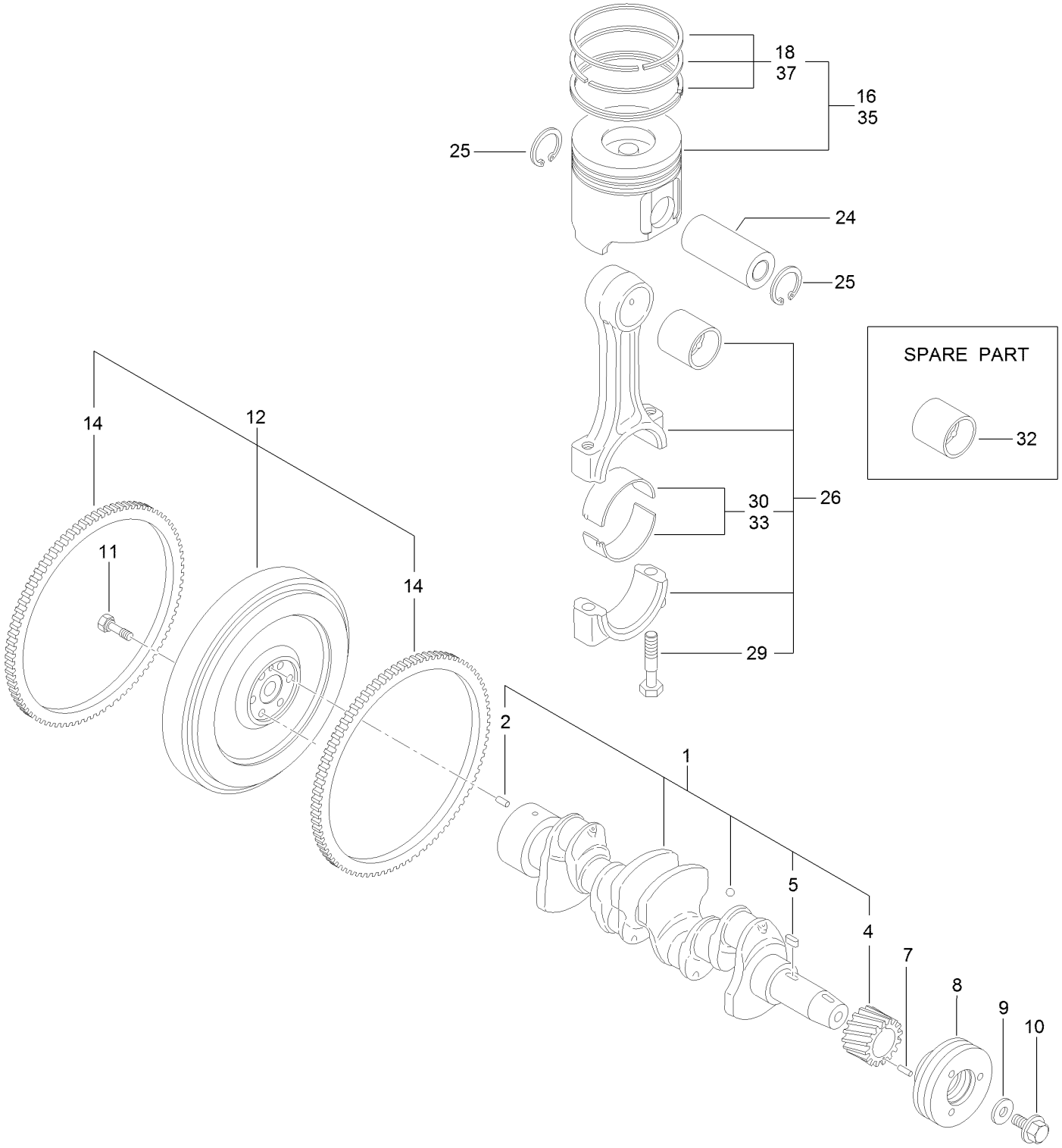

Crankshaft and Piston Assembly (continued)

Ref.	Part Number	Qty.	Description
1	125-7091	1	Crankshaft ASM
2	125-6995	1	Pin
4	125-6937	1	Gear
5	125-7185	1	Key
7	125-7182	1	Pin-Spring
8	125-6925	1	V-Pulley
9	125-7109	1	Washer
10	125-6956	1	Bolt
11	125-6951	6	Bolt
12	127-3160	1	Flywheel ASM
14	125-6943	1	Gear

Ref.	Part Number	Qty.	Description
16	127-3097	4	Piston ASM
18	127-3098	4	Piston Ring ASM
24	125-7030	4	Pin
25	125-7180	8	Ring
26	125-7242	4	Connecting Rod ASM
29	125-6955	8	Bolt
30	125-7018	4	Pin-Crank
32	125-6997	4	Pin-Piston
33	125-7019	4	Pin-Crank (.25)
35	127-3099	4	Piston ASM (0.25 O.S.)
37	127-3100	4	Piston Ring ASM (0.25 O.S.)

Lubrication and Oil System Assembly

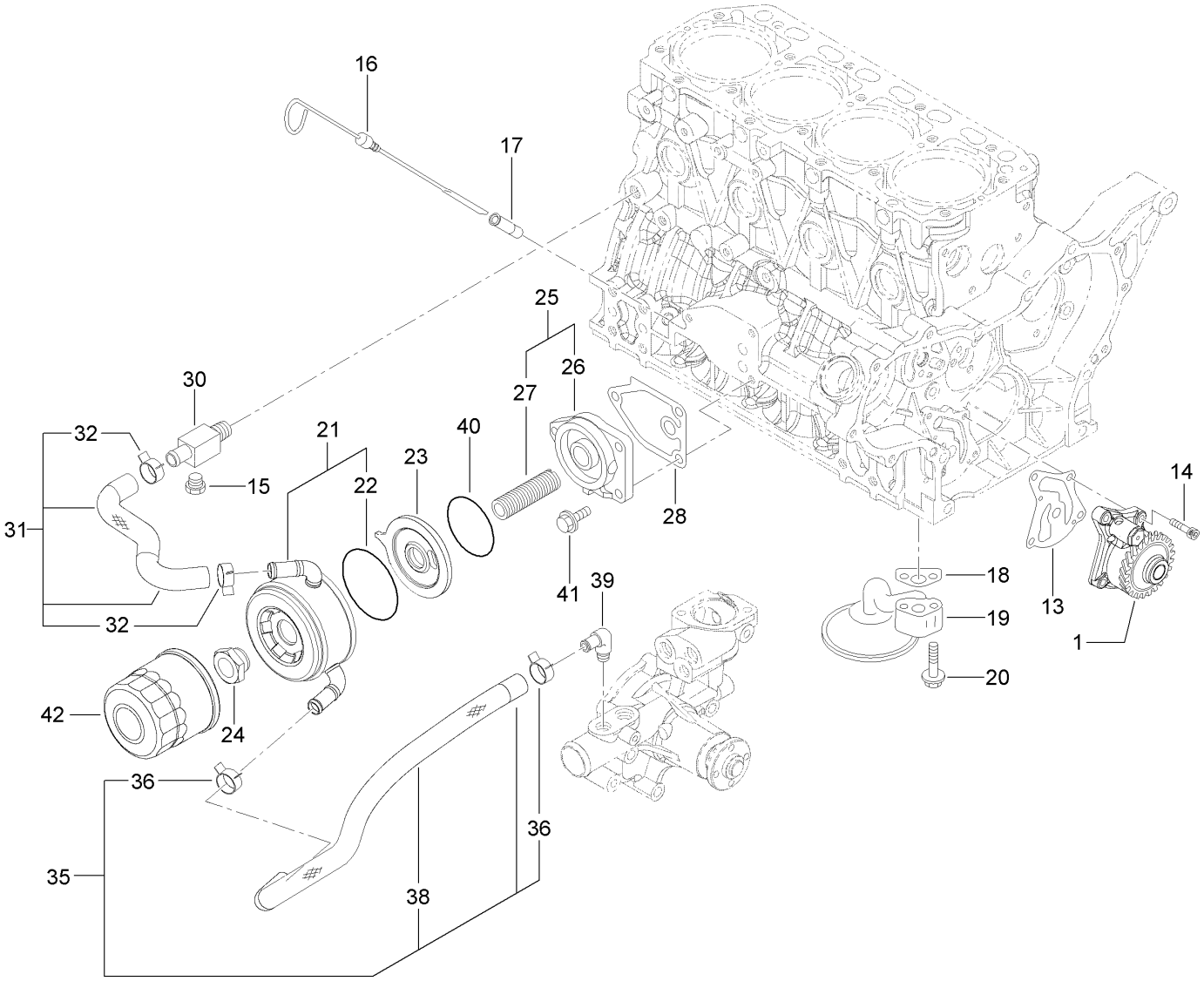

Lubrication and Oil System Assembly (continued)

Ref.	Part Number	Qty.	Description
1	127-3101	1	Oil Lube Pump ASM
13	127-3004	1	Gasket
14	125-7232	4	Bolt
15	125-7171	1	Plug-Drain
16	125-6987	1	Dipstick
17	125-6954	1	Guide-Dipstick
18	125-7022	1	Gasket
19	138-7837	1	Pipe Assy, Oil Inlet
20	138-7838	2	Bolt, M8X 55 Plated
21	127-3014	1	Cooler ASM
22	127-2985	1	O-Ring
23	138-7839	1	Bracket, Cooler
24	125-7041	1	Nut-Cooler, Oil
25	127-3009	1	Bracket ASM
26	125-6930	1	Bracket
27	127-3010	1	Stud
28	125-7024	1	Gasket
30	125-6990	1	Joint
31	127-3102	1	Pipe-Cooling, Water
32	125-7162	2	Clip
35	127-3103	1	Hose-Cooling, Water
36	125-7162	2	Clip
38	127-3007	1	Tube
39	125-7001	1	Elbow
40	127-3176	1	O-Ring
41	125-7595	3	Bolt
42	125-7025	1	Filter-Engine, Oil

Lubrication Oil Pipe Assembly

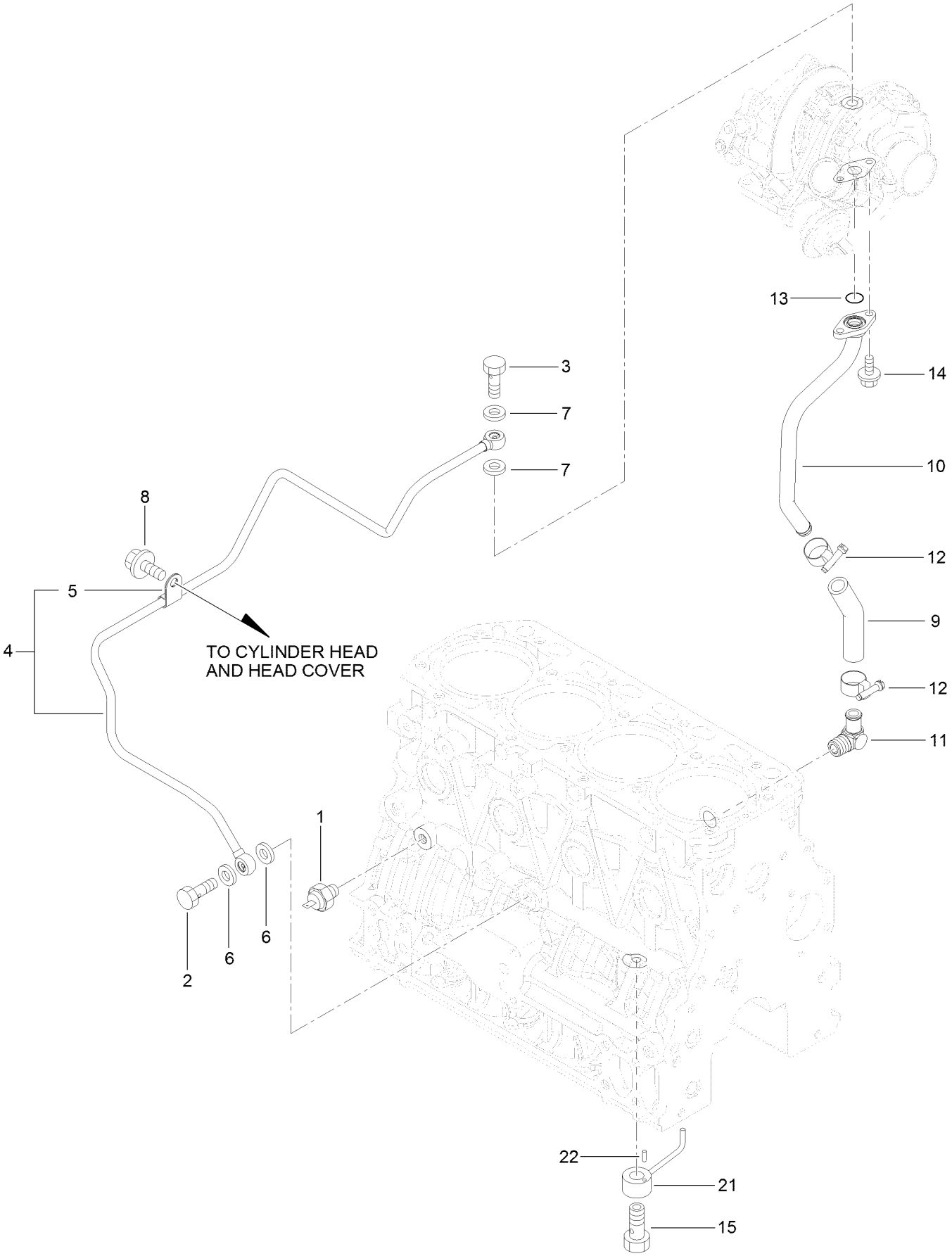

Lubrication Oil Pipe Assembly (continued)

Ref.	Part Number	Qty.	Description
1	125-6918	1	Switch-Oil
2	125-6975	1	Bolt-Joint, Pipe
3	125-6952	1	Bolt-Joint, Pipe
4	127-3154	1	Lube Oil Pipe ASM
5	125-6976	1	Retainer
6	125-7175	2	Washer-Seal
7	125-7193	2	Gasket
8	138-7840	1	Bolt
9	127-2992	1	Joint
10	127-3155	1	Pipe-Lube, Oil
11	127-3003	1	Elbow
12	127-3169	2	Clamp-Hose
13	125-7198	1	O-Ring
14	125-7206	2	Bolt
15	125-7105	4	Check Valve ASM
21	125-7098	4	Nozzle
22	125-7182	4	Pin-Spring

Cooling Water System Assembly

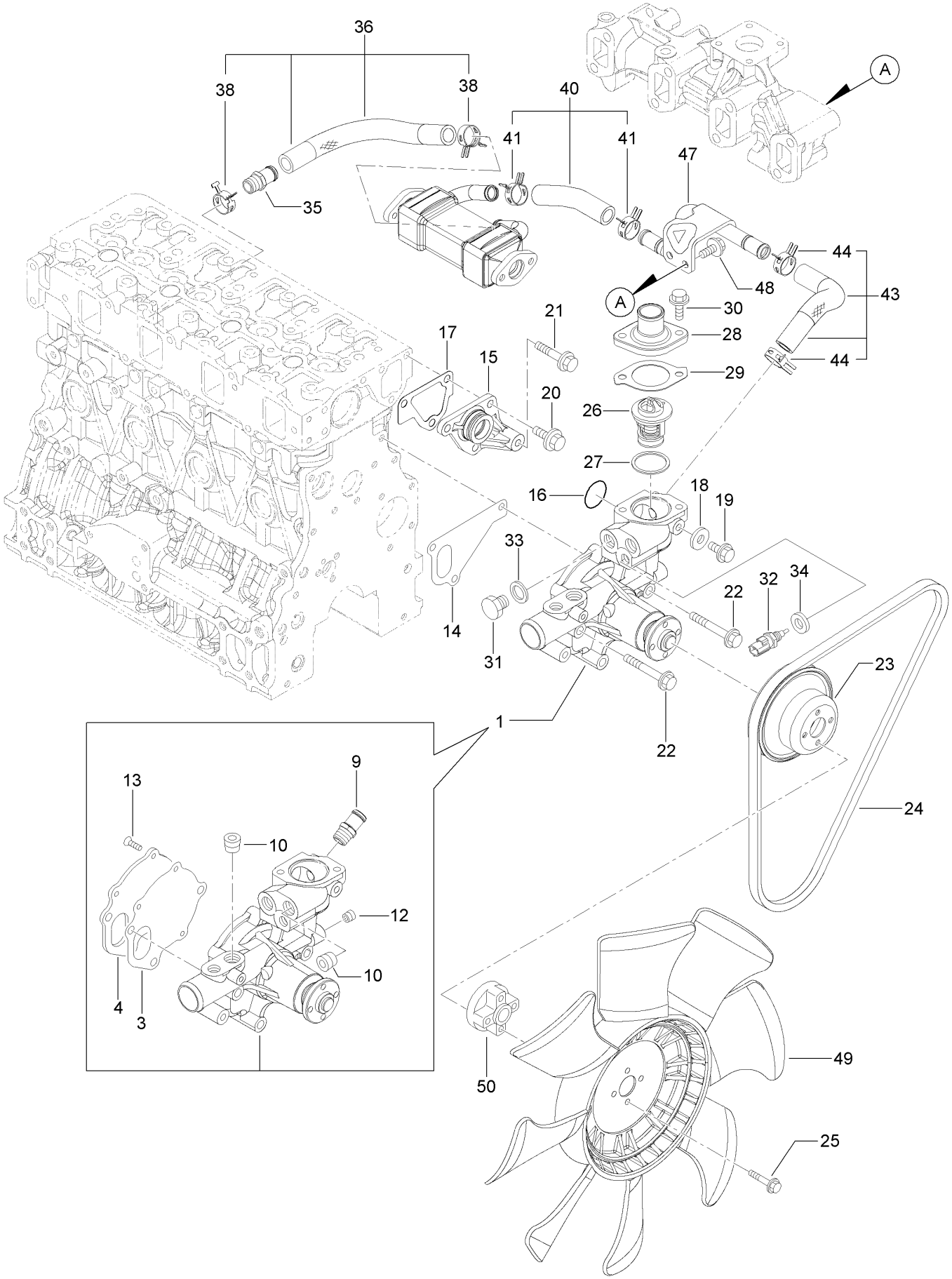

Cooling Water System Assembly (continued)

Ref.	Part Number	Qty.	Description
1	131-2714	1	Water Pump ASM
3	125-6998	1	Gasket
4	125-6999	1	Plate
9	127-3017	1	Joint
10	125-7123	2	Plug
12	125-7195	1	Plug
13	125-7234	3	Screw
14	125-7047	1	Gasket
15	125-6986	1	Joint
16	125-7048	1	O-Ring
17	125-6978	1	Gasket
18	125-7192	1	Gasket
19	138-7840	1	Bolt
20	125-7214	3	Bolt
21	125-7219	1	Bolt
22	125-7222	3	Bolt
23	125-7039	1	V-Pulley
24	127-4771	1	V-Belt
25	125-7211	4	Bolt
26	125-7029	1	Thermostat
27	125-7026	1	Gasket
28	125-7034	1	Cover
29	125-7110	1	Gasket
30	125-7594	2	Bolt
31	125-6953	1	Plug
32	125-7124	1	Sensor-Thermostat, CW
33	125-6979	1	Gasket
34	125-7176	1	Washer-Seal
35	127-3017	1	Joint
36	127-3072	1	Water In Pipe ASM
38	127-3020	2	Clip-Hose
40	127-3115	1	Water Out Pipe ASM
41	127-3020	2	Clip-Hose
43	127-3116	1	Water Out Pipe ASM
44	127-3020	2	Clip-Hose
47	138-7841	1	Water Pipe ASM
48	125-7214	2	Bolt
49	127-3809	1	Fan
50	127-4768	1	Spacer

Fuel Supply Pump Assembly

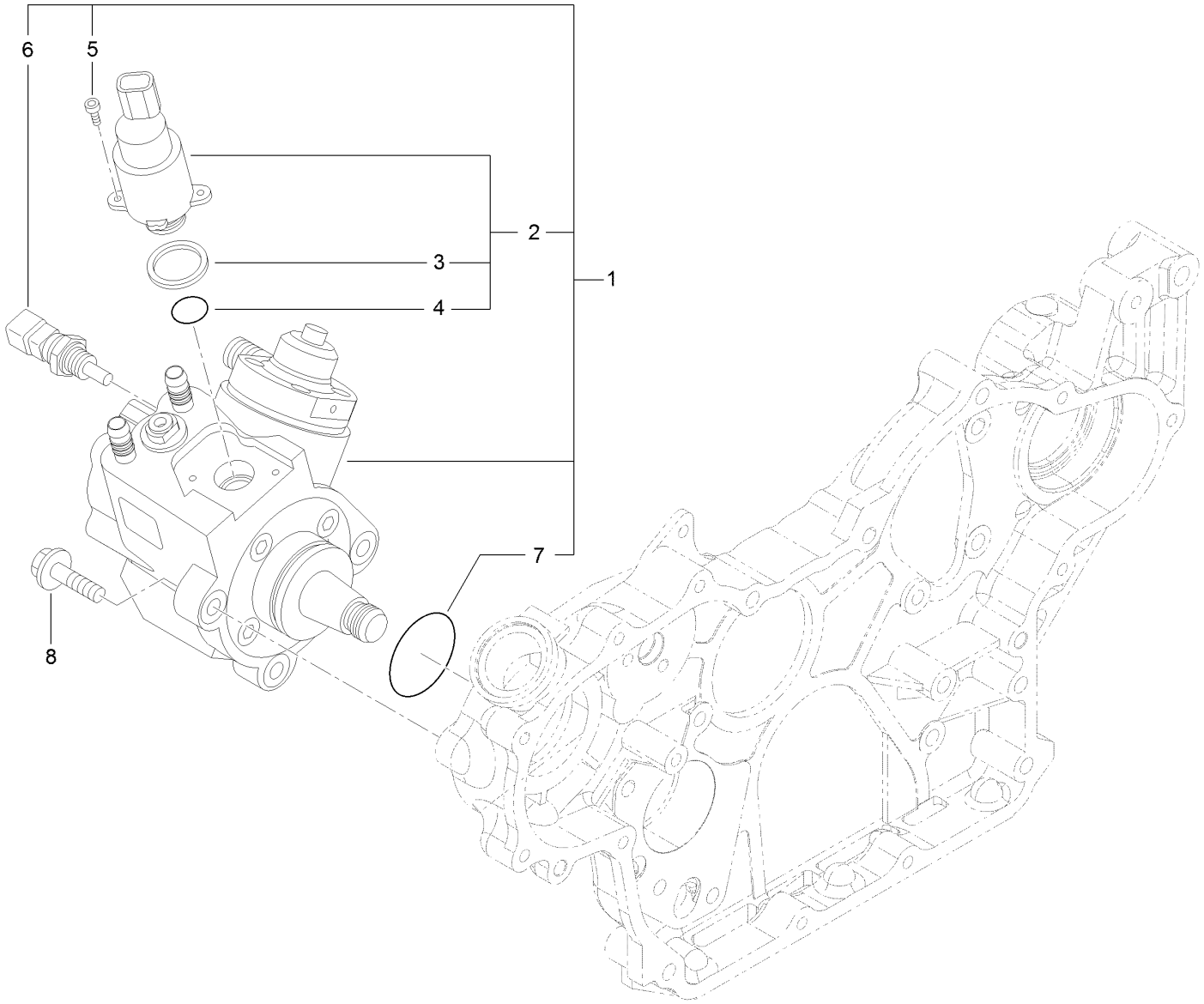

Fuel Supply Pump Assembly (continued)

Ref.	Part Number	Qty.	Description
1	127-3073	1	Fuel Pump ASM
2	131-2103	1	Valve ASM
3	131-2105	1	Ring-Sealing
4	131-2106	1	O-Ring
5	131-2107	2	Bolt
6	131-2108	1	Sensor-Temperature
7	127-3074	1	O-Ring
8	125-7216	3	Bolt

Fuel Injection Valve Assembly

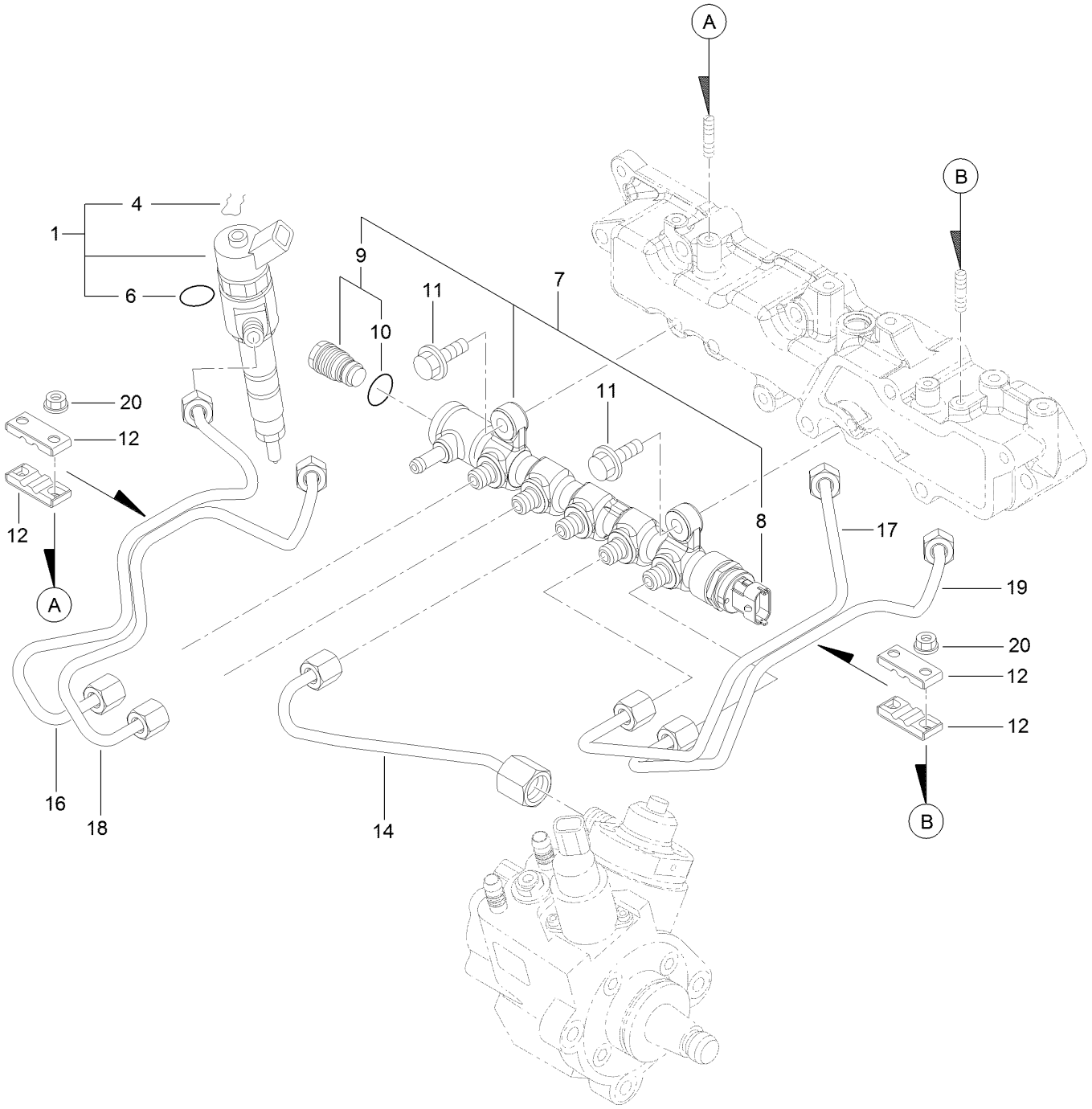

Fuel Injection Valve Assembly (continued)

Ref.	Part Number	Qty.	Description
1	127-3104	4	Injector ASM
4	130-7430	4	Ring-Retaining
6	137-5173	4	O-Ring
7	127-3118	1	Rail ASM
8	131-2709	1	Sensor-Pressure, Rail
9	131-2710	1	Valve ASM
10	131-2711	1	O-Ring
11	125-7215	2	Bolt
12	127-2982	4	Retainer
14	127-3082	1	Rail In Pipe ASM
16	127-3121	1	Injection Pipe ASM
17	127-3083	1	Injection Pipe ASM
18	127-3122	1	Injection Pipe ASM
19	127-3084	1	Injection Pipe ASM
20	125-7231	4	Nut

Fuel Pipe Assembly

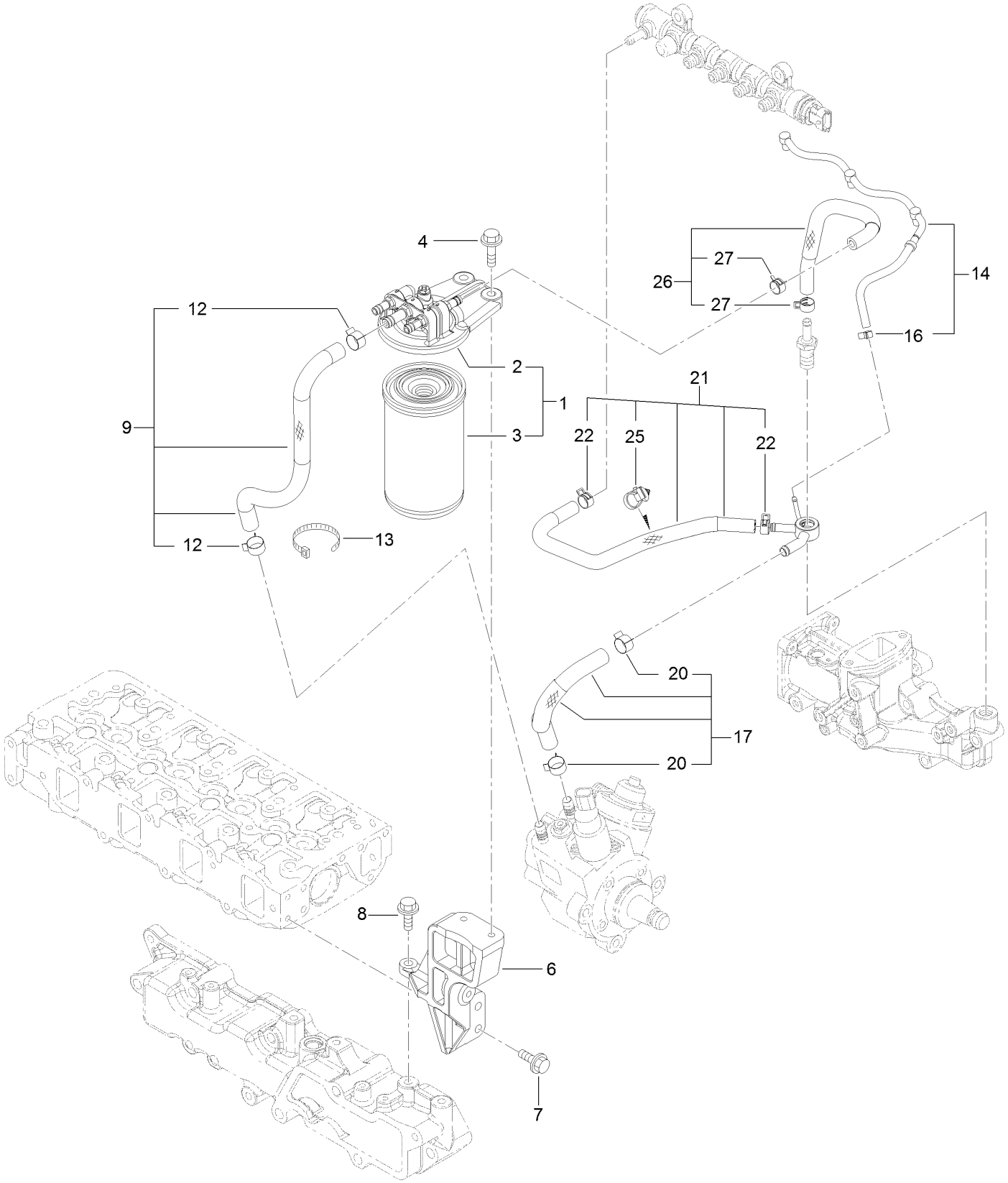

Fuel Pipe Assembly (continued)

Ref.	Part Number	Qty.	Description
1	127-3075	1	Fuel/Oil Filter ASM
2	127-3076	1	Fuel/Oil Filter Bracket ASM
3	125-8752	1	Filter-Fuel/Oil
4	125-7216	2	Bolt
6	127-3815	1	Filter Bracket ASM
7	125-7595	2	Bolt
8	125-7215	1	Bolt
9	127-3077	1	Fuel Pipe ASM
12	125-7191	2	Clamp-Hose
13	127-2981	1	Band
14	138-7845	1	Return Pipe ASM
16	127-3172	1	Clamp-Hose
17	127-3078	1	Fuel Pipe ASM
20	125-7191	2	Clamp-Hose
21	127-3119	1	Fuel Pipe ASM
22	127-2950	2	Clip-Hose
25	127-3087	1	Band-Clip
26	127-3079	1	Fuel Pipe ASM
27	127-2950	2	Clip-Hose

Starter Motor Assembly

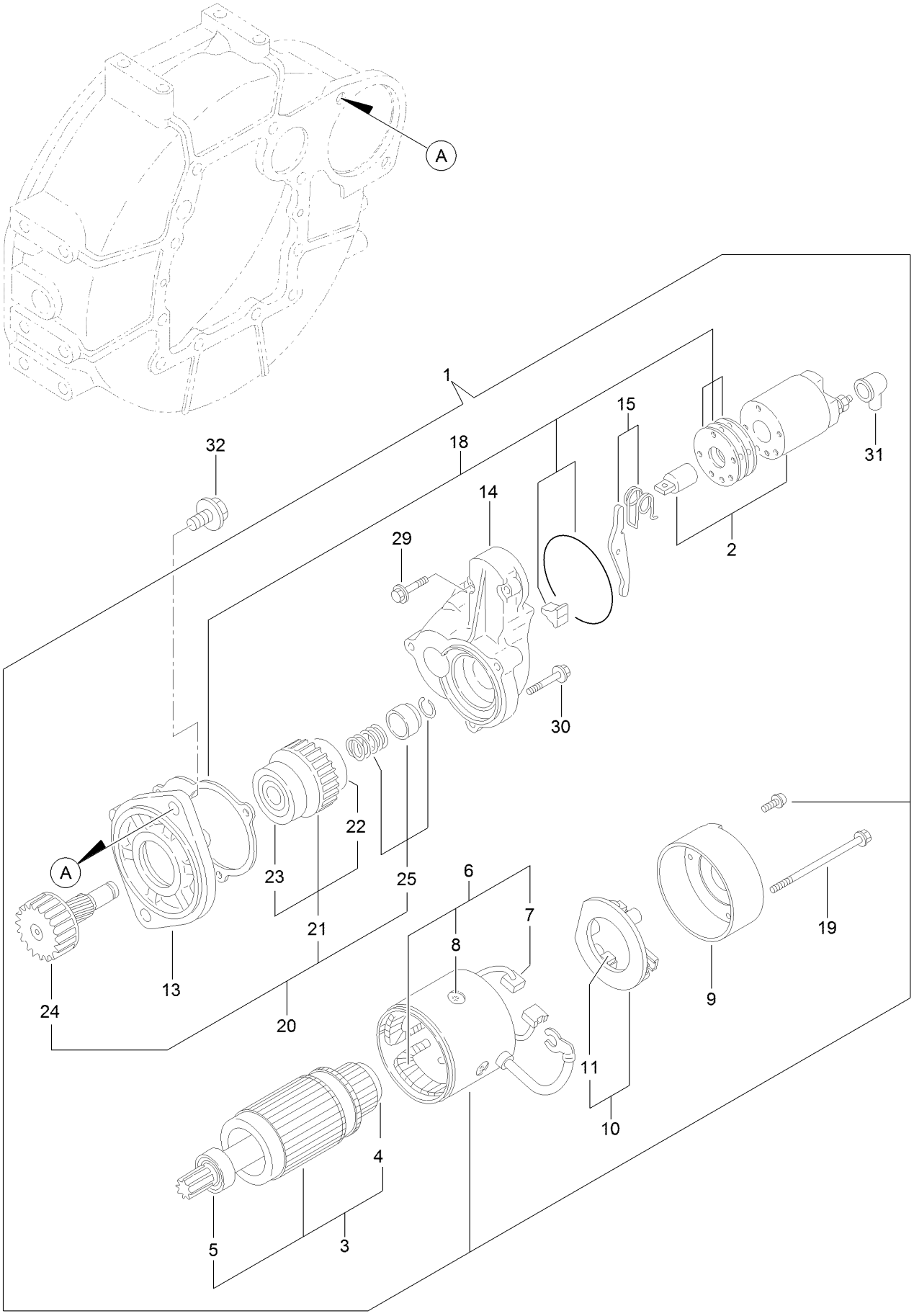

Starter Motor Assembly (continued)

Ref.	Part Number	Qty.	Description
1	125-7003	1	Starter
2	125-7004	1	Switch ASM
3	125-7112	1	Armature ASM
4	138-7846	1	Bearing-Ball
5	138-7847	1	Bearing-Ball
6	125-7113	1	Field Coil ASM
7	125-7114	2	Brush
8	138-7848	4	Screw-Set
9	125-7115	1	Cover
10	125-7116	1	Brush Holder ASM
11	138-7849	2	Brush
13	125-7164	1	Case-Gear
14	125-7005	1	Housing
15	125-7165	1	Lever Set
18	125-7037	1	Dust Cover ASM
19	125-7117	2	Bolt-Through
20	125-7166	1	Pinion ASM
21	125-7250	1	Clutch ASM
22	125-7251	1	Bearing-Ball
23	138-7850	1	Bearing-Ball
24	125-7167	1	Shaft
25	125-7168	1	Stopper Set
29	125-7210	2	Bolt
30	125-7211	3	Bolt
31	125-7169	1	Cover
32	125-7225	2	Bolt

Generator Assembly

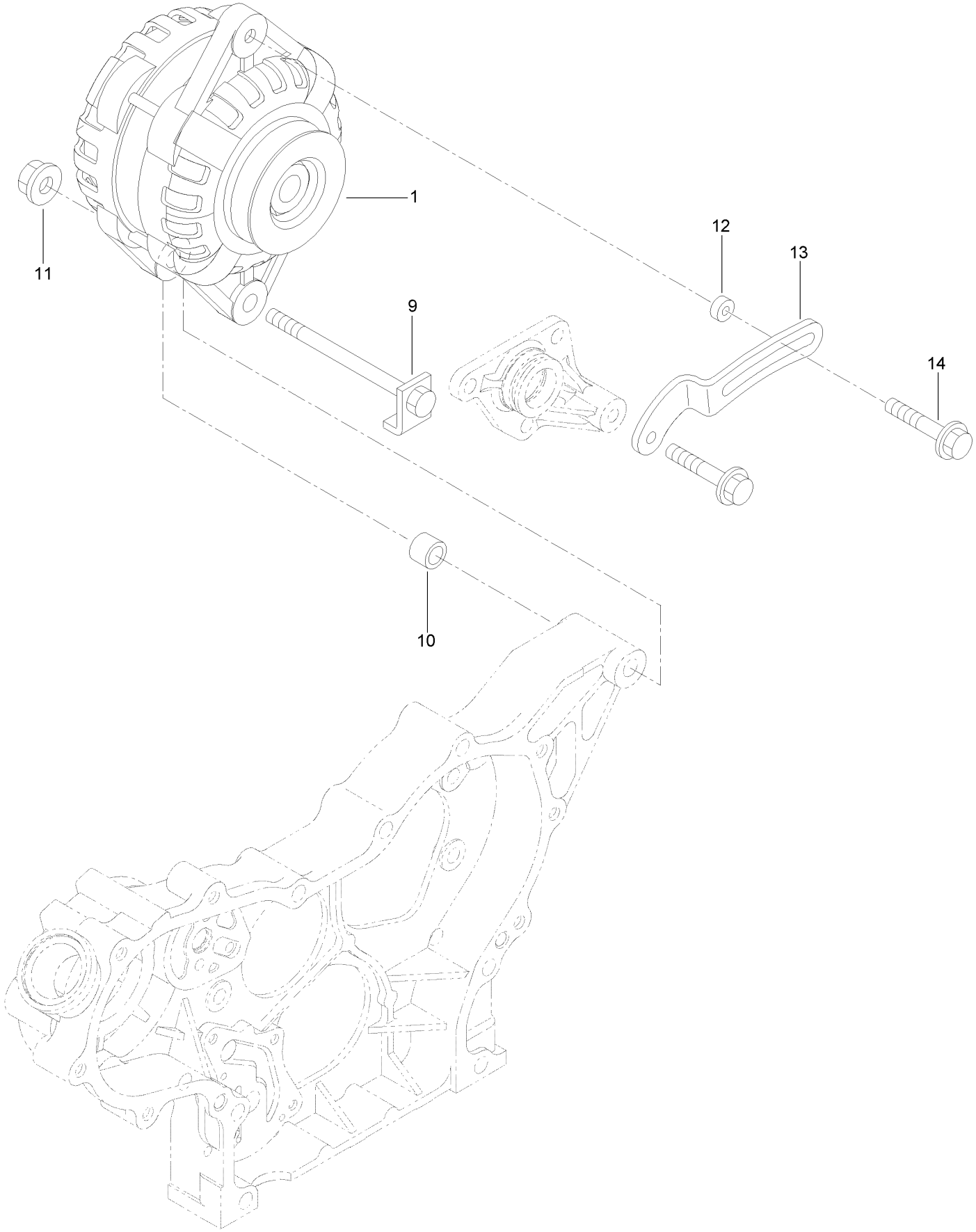

Generator Assembly (continued)

Ref.	Part Number	Qty.	Description
1	125-7120	1	Alternator-12V
9	125-7121	1	Bolt-Stopper
10	138-7851	1	Piece-Distance
11	125-7230	1	Nut
12	138-7852	1	Spacer-Alternator
13	138-7853	1	Adjuster-Belt
14	135-4027	1	Bolt-Adjust

Electronic Control Unit Assembly

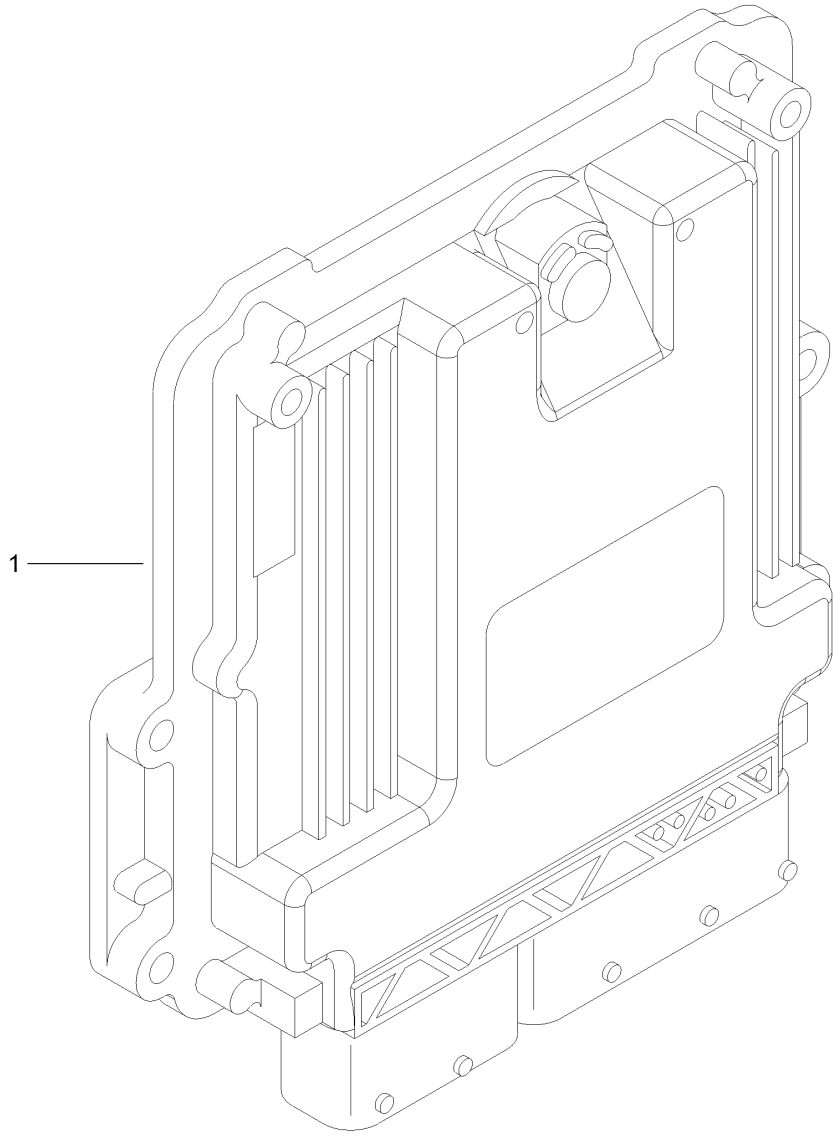

Electronic Control Unit Assembly (continued)

Ref.	Part Number	Qty.	Description
1	121-5592	1	Electronic Control Unit

Electric Parts Assembly

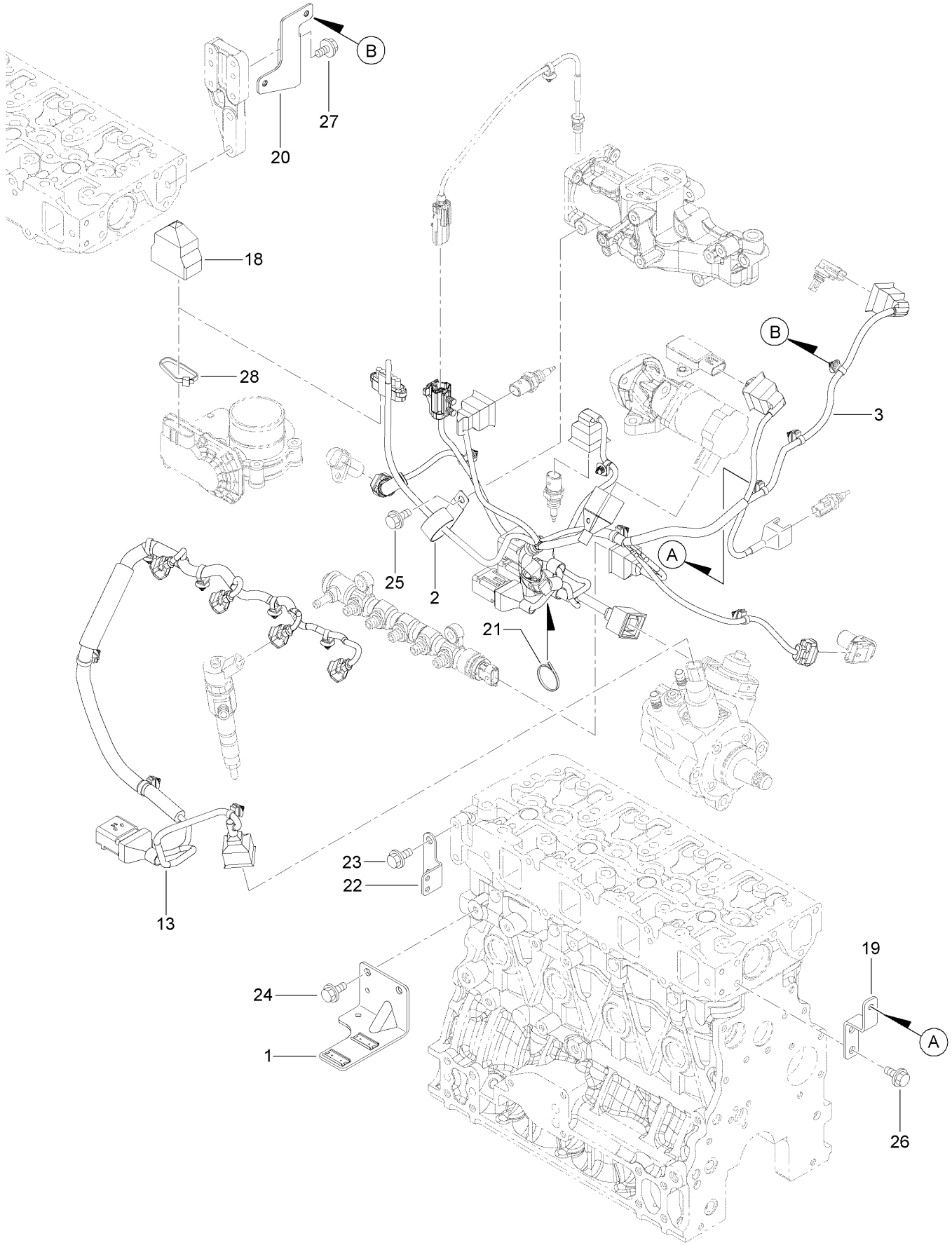

Electric Parts Assembly (continued)

Ref.	Part Number	Qty.	Description
1	127-3086	1	Bracket-Connector
2	127-3018	1	Clip
3	138-7855	1	Harness B
13	127-3125	1	Harness C
18	131-2713	1	Boot-Cap
19	127-3852	1	Bracket-Harness
20	138-7856	1	Bracket-Harness
21	127-3187	1	Band
22	127-3090	1	Bracket-Harness
23	125-7212	7	Bolt
24	125-7212	2	Bolt
25	125-7212	1	Bolt
26	125-7212	2	Bolt
27	138-7857	2	Bolt
28	127-3188	1	Band

Miscellaneous Engine Parts

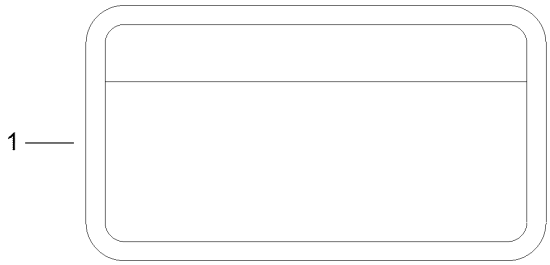

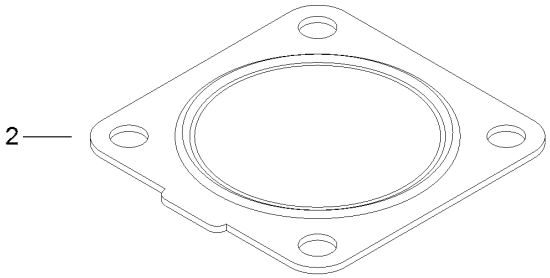

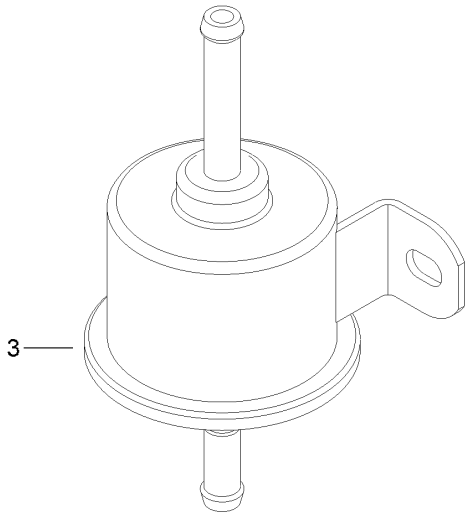

Miscellaneous Engine Parts (continued)

Ref.	Part Number	Qty.	Description
1	125-6900	1	Label-Caution, Fuel Oil
2	127-3019	1	Gasket
3	121-5613	1	Pump-Fuel, Electric

Gasket Set

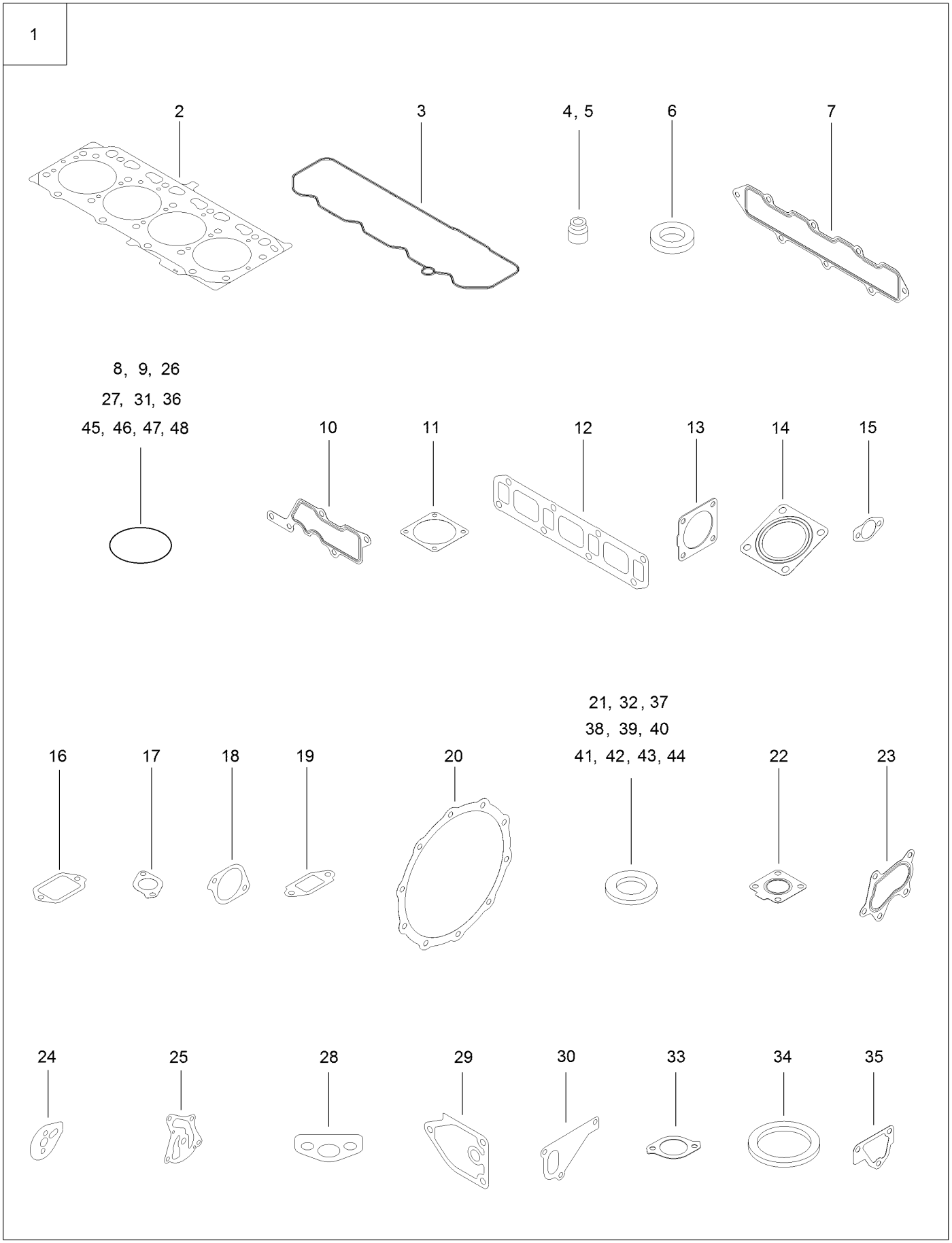
1
2
3
4, 5
6
7
8, 9, 26
27, 31, 36
45, 46, 47, 48
10
11
12
13
14
15
16
17
18
19
20
21, 32, 37
38, 39, 40
41, 42, 43, 44
22
23
24
25
28
29
30
33
34
35

Gasket Set (continued)

Ref.	Part Number	Qty.	Description
1	127-3189	1	Gasket Kit
2	127-3126	1	Gasket-Head, Cylinder
3	127-3106	1	Gasket-Cover
4	127-2986	4	Seal-Stem, Valve
5	127-3027	4	Seal-Stem, Valve
6	127-3021	4	Gasket-Injector
7	127-3107	1	Gasket-Manifold, Intake
8	127-3032	2	O Ring-Sensor, Pressure
9	127-3033	1	O-Ring
10	127-3034	1	Gasket-Collector
11	127-3037	2	Gasket-Throttle
12	127-3108	1	Gasket-Manifold, Exhaust
13	127-3019	1	Gasket
14	127-2987	1	Gasket-Silencer
15	127-3043	2	Gasket-Cooler, E G R
16	127-3046	1	Gasket-E G R
17	127-3016	1	Gasket
18	127-3050	1	Gasket-Intake Valve, E G R
19	127-3051	1	Gasket-Out Valve, E G R
20	127-3162	2	Gasket-D P F
21	127-3056	4	Gasket-Sensor
22	125-7070	1	Gasket
23	125-7071	1	Gasket
24	127-3069	1	Gasket-Idle, Shaft B
25	127-3004	1	Gasket
26	125-6909	2	O-Ring
27	127-2973	1	O-Ring
28	125-7022	1	Gasket
29	125-7024	1	Gasket
30	125-7047	1	Gasket
31	125-7048	1	O-Ring
32	125-6979	1	Gasket
33	125-7110	1	Gasket
34	125-7026	1	Gasket
35	125-6978	1	Gasket
36	127-3074	1	O-Ring
37	125-7174	1	Washer-Seal
38	125-7175	2	Washer-Seal
39	125-7176	1	Washer-Seal
40	127-3166	2	Washer-Seal
41	125-7177	1	Washer-Seal
42	125-7192	1	Gasket
43	125-7193	2	Gasket
44	127-3174	2	Gasket
45	138-7858	3	O-Ring
46	125-7197	1	O-Ring
47	125-7198	1	O-Ring
48	127-3176	1	O-Ring

Attachments and Accessories

For 07511AA Outcross 9060 Series Traction Unit

Product Name	Model/Part
Rear Selector Valve Kit	07527
Cargo Bed	07530
Hood Guard	07531
Rear Screen	07532
Aggressive Tires	07535
Pintle Hitch	07536
7-way Trailer Plug Kit EU	07538
InchMode	07540
Homologation	07541
Road Light Kit and Horn	07542
Work Lights	07545
Beacon Kit	07546
7-Way Trailer Plug Kit	07547
Foam Marker Finish Kit	07548
Horn Kit	07549
Premium Transmission/Hydraulic Tractor Fluid (55 Gallon Drum)	108-1183
Premium Transmission/Hydraulic Tractor Fluid (5 Gallon Pail)	108-1184
Wireless Hourmeter	115-4754
External Antenna Kit, Wireless Hourmeter System	115-9524
Base Station Kit, Wireless Hourmeter System	115-9542
Repeater Kit, Wireless Hourmeter System	115-9543
Premium Engine Oil 10w30 (55 Gallon Drum)	121-6392
Premium Engine Oil 10w30 (5 Gallon Pail)	121-6393
Premium Engine Oil 15w40 (55 Gallon Drum)	121-6394
Premium Engine Oil 15w40 (5 Gallon Pail)	121-6395
Brake Controller	130-4230
Exterior Mirror Kit	130-5448
Interior Mirror Kit	130-5449
Large Seat Cover	131-6691
Wide Angle Mirror Kit	133-1038
Top Link Bushing Kit, Category 2 To 1	138-4196
Lift Arm Bushing Kit, Category 2 To 1	138-4197
Backup Alarm Kit	140-0508
500 Hour MVP Maintenance Kit	31196
Toro Red 12oz Aerosol Can	361-10
New Red Paint - Gallon	361-11
Dark Metallic Gray Aerosol Paint	361-12
Semi-Gloss Black Spray Paint	361-9
Foam Marker Kit	41249
Air Dry Red Paint - Qt	5340

Notes:

Notes:

Notes:

TORO®

Count on it.