Form No. 3442-977 Rev C

TORO®

Count on it.

Operator's Manual

Workman® MDX-D Utility Vehicle

Model No. 07236TC—Serial No. 407300000 and Up

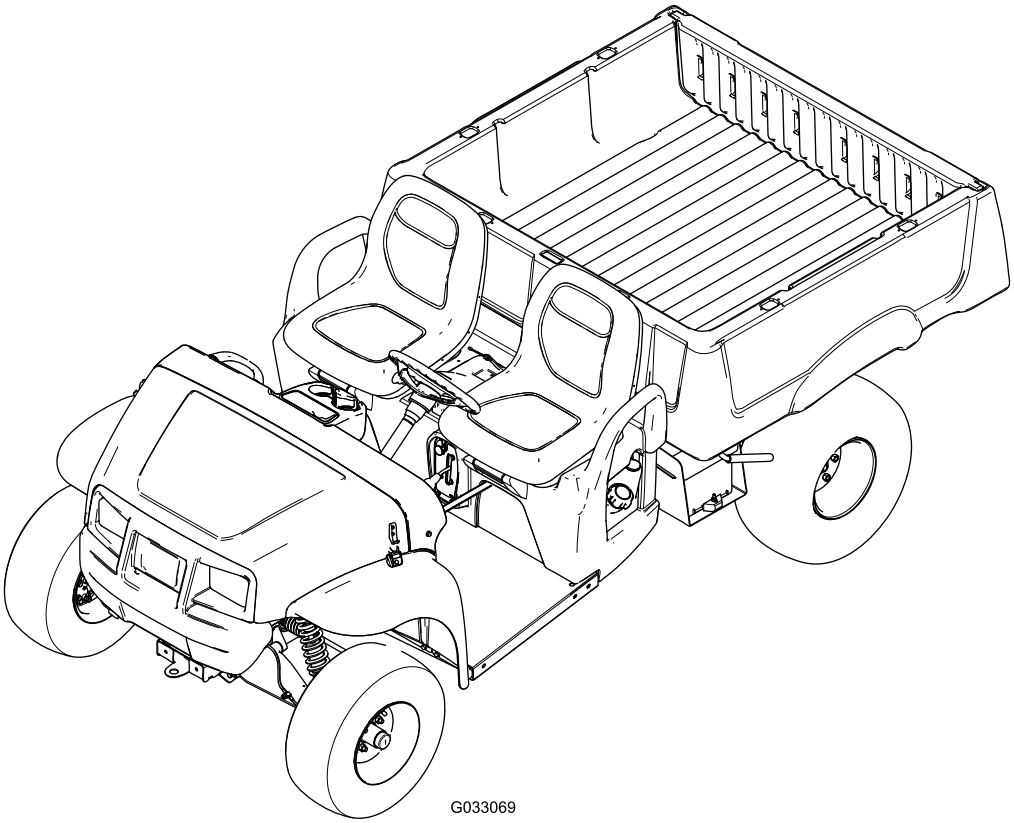

Register at www.Toro.com.
Original Instructions (EN)

3442-977

This product complies with all relevant European directives; for details, please see the separate product specific Declaration of Conformity (DOC) sheet.

It is a violation of California Public Resource Code Section 4442 or 4443 to use or operate the engine on any forest-covered, brush-covered, or grass-covered land unless the engine is equipped with a spark arrester, as defined in Section 4442, maintained in effective working order or the engine is constructed, equipped, and maintained for the prevention of fire.

The enclosed engine owner's manual is supplied for information regarding the US Environmental Protection Agency (EPA) and the California Emission Control Regulation of emission systems, maintenance, and warranty. Replacements may be ordered through the engine manufacturer.

⚠ WARNING

CALIFORNIA
Proposition 65 Warning

Diesel engine exhaust and some of its constituents are known to the State of California to cause cancer, birth defects, and other reproductive harm.

Battery posts, terminals, and related accessories contain lead and lead compounds, chemicals known to the State of California to cause cancer and reproductive harm. Wash hands after handling.

Use of this product may cause exposure to chemicals known to the State of California to cause cancer, birth defects, or other reproductive harm.

Introduction

This utility vehicle is intended to be primarily used off-highway to transport people and material loads. Using this product for purposes other than its intended use could prove dangerous to you and bystanders.

Read this information carefully to learn how to operate and maintain your product properly and to avoid injury and product damage. You are responsible for operating the product properly and safely.

Visit www.Toro.com for product safety and operation training materials, accessory information, help finding a dealer, or to register your product.

Whenever you need service, genuine Toro parts, or additional information, contact an Authorized Service Distributor or Toro Customer Service and have the model and serial numbers of your product ready. Figure 1 identifies the location of the model and serial numbers on the product. Write the numbers in the space provided.

Important: **With your mobile device, you can scan the QR code on the serial number decal (if equipped) to access warranty, parts, and other product information.**

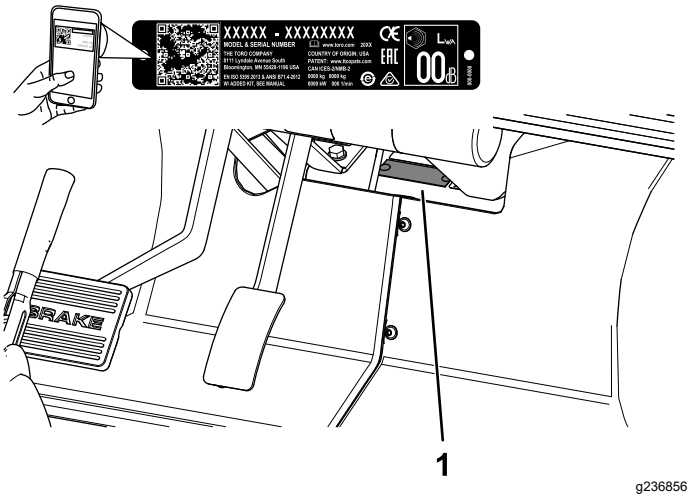

Figure 1

1. Model and serial number location

Model No. _____

Serial No. _____

This manual uses 2 words to highlight information. **Important** calls attention to special mechanical information and **Note** emphasizes general information worthy of special attention.

The safety-alert symbol (Figure 2) appears both in this manual and on the machine to identify important

© 2021—The Toro® Company
8111 Lyndale Avenue South
Bloomington, MN 55420

Contact us at www.Toro.com.
Printed in the USA
All Rights Reserved

safety messages that you must follow to avoid accidents. This symbol will appear with the word **Danger**, **Warning**, or **Caution**.

- **Danger** indicates an imminently hazardous situation which, if not avoided, **will** result in death or serious injury.
- **Warning** indicates a potentially hazardous situation which, if not avoided, **could** result in death or serious injury.
- **Caution** indicates a potentially hazardous situation which, if not avoided, **may** result in minor or moderate injury.

g000502

Figure 2

Safety-alert symbol

Contents

Safety 4
General Safety 4
Safety and Instructional Decals 4
Setup 7
1 Installing the Steering Wheel 7
2 Connecting the Battery 7
3 Checking the Fluid Levels and Tire Pressure 8
4 Burnishing the Brakes 8
5 Reading the Manual and Viewing the Setup Material 9
Product Overview 10
Controls 11
Specifications 14
Attachments/Accessories 14
Before Operation 15
Before Operation Safety 15
Performing Daily Maintenance 15
Checking the Tire Pressure 15
Adding Fuel 16
Breaking in a New Machine 16
During Operation 17
During Operation Safety 17
Operating the Cargo Bed 18
Starting the Engine 20
Stopping the Machine 20
Shutting Off the Engine 20
Loading the Cargo Bed 20
After Operation 21
After Operation Safety 21
Hauling the Machine 22
Towing the Machine 22
Towing a Trailer 22
Maintenance 23
Maintenance Safety 23
Recommended Maintenance Schedule(s) 23
Daily Maintenance Checklist 25
Maintaining the Machine under Special Operating Conditions 25
Pre-Maintenance Procedures 26
Preparing the Machine for Maintenance 26
Lifting the Machine 26
Accessing the Hood 27
Lubrication 27
Greasing the Front Wheel Bearings 27
Engine Maintenance 30
Engine Safety 30
Servicing the Air Filter 30
Servicing the Engine Oil 31
Fuel System Maintenance 33
Inspecting Fuel Lines and Connections 33
Replacing the Fuel Filter 33
Electrical System Maintenance 34
Electrical System Safety 34
Servicing the Battery 34
Replacing the Fuses 35
Maintaining the Headlights 35
Drive System Maintenance 37
Maintaining the Tires 37
Inspecting the Steering and Suspension Components 38
Adjusting the Front Wheel Alignment 39
Checking the Transaxle-Fluid Level 40
Changing the Transaxle Fluid 40
Checking and Adjusting Neutral 41
Inspecting the Primary Drive Clutch 41
Maintaining the Primary Drive Clutch 42
Cooling System Maintenance 42
Cooling System Safety 42
Cleaning the Engine-Cooling Areas 42
Servicing the Radiator 43
Brake Maintenance 44
Inspecting the Brakes 44
Adjusting the Parking-Brake Handle 44
Adjusting the Brake Cables 44
Checking the Brake-Fluid Level 45
Changing the Brake Fluid 46
Belt Maintenance 46
Servicing the Drive Belt 46
Checking the Belt-Pull Bumper 47
Chassis Maintenance 47
Adjusting the Cargo-Bed Latches 47
Cleaning 48
Washing the Machine 48
Storage 49
Storage Safety 49
Storing the Machine 49

Safety

This machine has been designed in accordance with the requirements of SAE J2258 (Nov 2016).

General Safety

This product is capable of causing personal injury. Always follow all safety instructions to avoid serious personal injury.

- Read and understand the contents of this *Operator's Manual* before you start the machine. Ensure that everyone using this product knows how to use it and understands the warnings.
- Use your full attention while operating the machine. Do not engage in any activity that causes distractions; otherwise, injury or property damage may occur.
- Do not put your hands or feet near moving components of the machine.
- Do not operate the machine without all guards and other safety protective devices in place and working on the machine.
- Keep bystanders and children out of the operating area. Never allow children to operate the machine.
- Stop and shut off the machine and remove the key before servicing or fueling.

Improperly using or maintaining this machine can result in injury. To reduce the potential for injury, comply with these safety instructions and always pay attention to the safety-alert symbol ⚠, which means Caution, Warning, or Danger—personal safety instruction. Failure to comply with these instructions may result in personal injury or death.

Safety and Instructional Decals

Safety decals and instructions are easily visible to the operator and are located near any area of potential danger. Replace any decal that is damaged or missing.

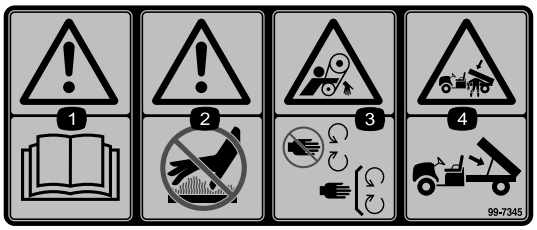

decal99-7345

99-7345

1. Warning—read the *Operator's Manual*.
2. Warning—do not touch the hot surface.
3. Entanglement hazard, belt—stay away from moving parts; keep all guards in place.
4. Crushing hazard, cargo box—use the prop rod to support the cargo bed.

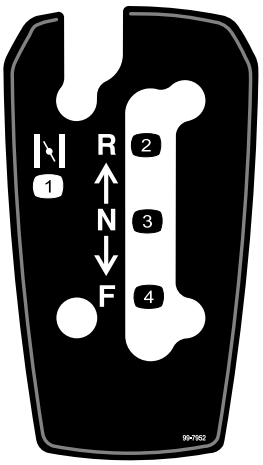

decal99-7952

99-7952

1. Choke
2. Reverse
3. Neutral
4. Forward

decal106-6755

106-6755

1. Engine coolant under pressure.
2. Explosion hazard—read the *Operator's Manual.*
3. Warning—do not touch the hot surface.
4. Warning—read the *Operator's Manual.*

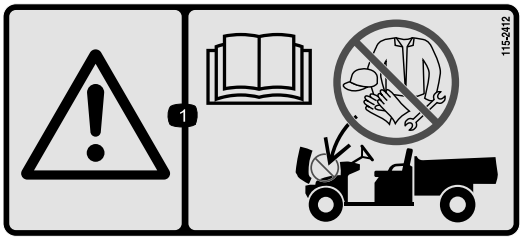

decal115-2412

115-2412

1. Warning—read the *Operator's Manual*; no storage.

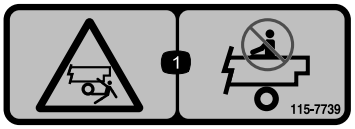

decal115-7739

115-7739

1. Falling, crushing hazard—do not carry passengers.

decal119-9727

119-9727

1. Horn
2. Hour meter
3. Headlights
4. Engine—shut off
5. Engine—on
6. Engine—start
7. Power point
8. Warning—read the *Operator's Manual*.
9. Collision hazard—do not operate the machine on public streets, roads, or highways.
10. Falling hazard—do not carry passengers in the cargo bed.
11. Falling hazard—do not allow children to operate the machine.

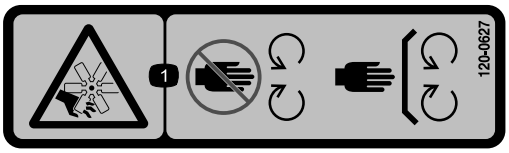

decal120-0627

120-0627

1. Cutting/dismemberment hazard, fan—stay away from moving parts, keep all guards and shields in place.

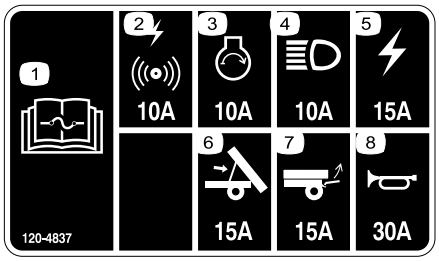

decal120-4837

120-4837

1. Read the *Operator's Manual* for information on fuses.
2. Alarm/power point (10 A)
3. Engine (10 A)
4. Headlights (10 A)
5. Machine fuse (15 A)
6. Lift (15 A)
7. Rear lift (15 A)
8. Horn (30 A)

decal121-9775

121-9775

1. Warning—read the *Operator's Manual* and receive training before operating the machine.
2. Warning—wear hearing protection.
3. Fire hazard—shut off the engine before refueling.
4. Tipping hazard—drive slowly on or across inclines; take turns slowly; do not exceed speeds of 31 kph (19 mph); drive slowly when hauling a load or when driving on uneven terrain.
5. Falling hazard; severing hazard of hand or foot—do not carry passengers in the bed; do not carry a third passenger; do not put your hands or feet outside the machine while operating.

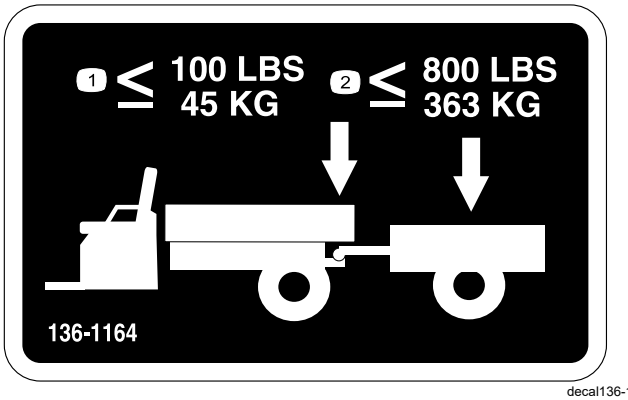

decal136-1164

136-1164

1. Do not exceed a tongue weight of 45 kg (100 lb).
2. Do not exceed a transport load of 363 kg (800 lb).

Setup

Loose Parts

Use the chart below to verify that all parts have been shipped.

Procedure	Description	Qty.	Use
1	Steering wheel Cover Washer (1/2 inch)	1 1 1	Install the steering wheel.
2	No parts required	–	Connect the battery.
3	No parts required	–	Check the fluid levels and tire pressure.
4	No parts required	–	Burnish (break-in) the brakes.
5	Operator's Manual Engine owner's manual Registration card Predelivery Inspection Form Certificate of Quality Key	1 1 1 1 1 2	Read the Operator's Manual and view the setup material before operating the machine.

Note: Determine the left and right sides of the machine from the normal operating position.

1

Installing the Steering Wheel

Parts needed for this procedure:

1	Steering wheel
1	Cover
1	Washer (1/2 inch)

Procedure

1. If the cover is installed, remove it from the hub of the steering wheel (Figure 3).
2. Remove the locknut (1/2 inch) from the steering shaft (Figure 3).
3. Slide the steering wheel and washer (1/2 inch) onto the steering shaft (Figure 3).
4. Secure the steering wheel to the shaft with the locknut (1/2 inch) and tighten it to 27 to 34 N·m (20 to 25 ft-lb).
5. Install the cover on the steering wheel (Figure 3).

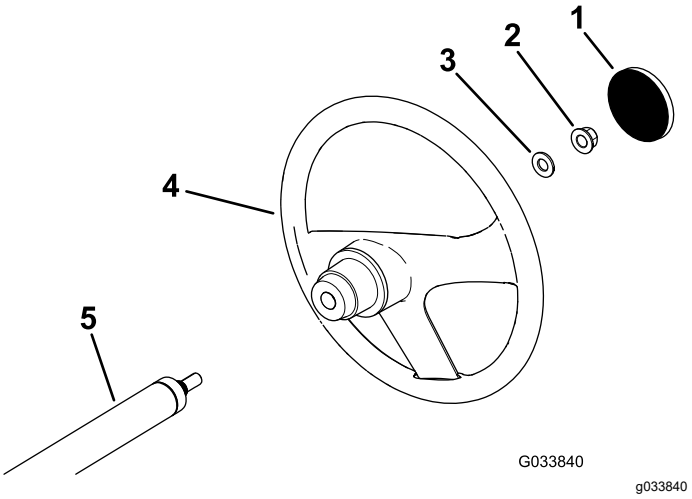

Figure 3

1. Cover
2. Locknut (1/2 inch)
3. Washer (1/2 inch)
4. Steering wheel
5. Steering shaft

2

Connecting the Battery

No Parts Required

Procedure

⚠ WARNING

Incorrect battery cable routing could damage the machine and cables, causing sparks. Sparks can cause the battery gases to explode, resulting in personal injury.

- **Always disconnect the negative (black) battery cable before disconnecting the positive (red) cable.**
- **Always connect the positive (red) battery cable before connecting the negative (black) cable.**

1. Squeeze the battery cover to release the tabs from the battery base (Figure 4).

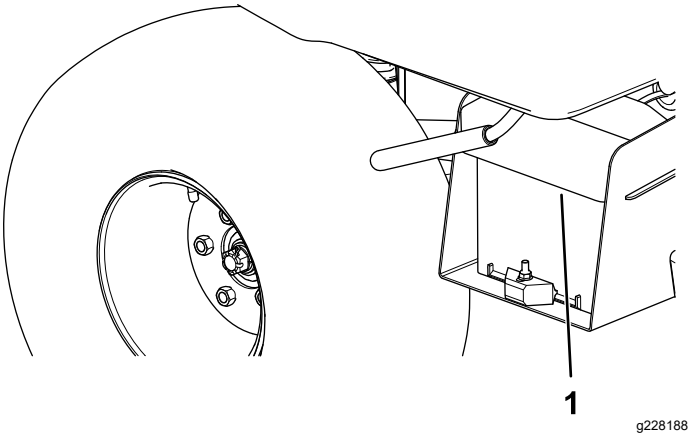

Figure 4

1. Battery cover

2. Remove the battery cover from the battery base (Figure 4).
3. Connect the positive battery cable (red) to the positive (+) terminal of the battery and secure the cable with the bolts and nuts (Figure 5).

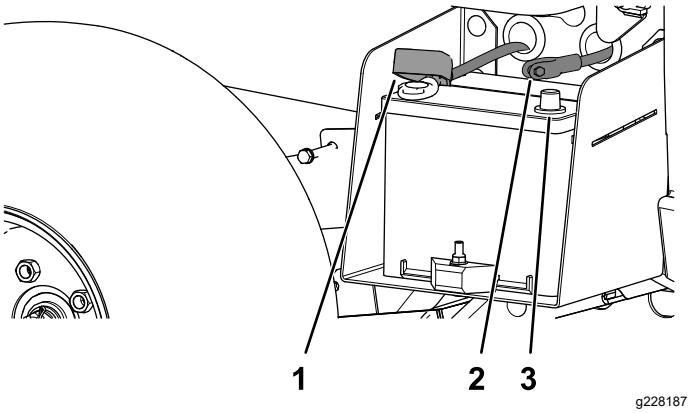

Figure 5

1. Insulator boot (positive battery cable)
2. Negative battery cable (black)
3. Negative battery post

4. Slide the insulator boot over the positive terminal.

   Note: The insulator boot prevents a possible short-to-ground from occurring.
5. Connect the negative battery cable (black) to the negative (–) terminal of the battery and secure the cable with the bolts and nuts.
6. Align the battery cover to the battery base (Figure 4).
7. Squeeze the battery cover, align the tabs to the battery base, and release the battery cover (Figure 4).

3

Checking the Fluid Levels and Tire Pressure

No Parts Required

Procedure

1. Check the engine-oil level before and after you first start the engine; refer to Checking the Engine-Oil Level (page 31).
2. Check the brake-fluid level before you first start the engine; refer to Checking the Brake-Fluid Level (page 45).
3. Check the transaxle-fluid level before you first start the engine; refer to Checking the Transaxle-Fluid Level (page 40).
4. Check the air pressure in the tires; refer to Checking the Tire Pressure (page 15).

4

Burnishing the Brakes

No Parts Required

Procedure

To ensure optimum performance of the brake system, burnish (break-in) the brakes before use.

1. Bring the machine up to full speed, apply the brakes to rapidly stop the machine without locking up the tires.
2. Repeat this procedure 10 times, waiting 1 minute between stops, to avoid overheating the brakes.

   Important: **This procedure is most effective if the machine is loaded with 227 kg (500 lb).**

5

Reading the Manual and Viewing the Setup Material

Parts needed for this procedure:

1	*Operator's Manual*
1	Engine owner's manual
1	Registration card
1	*Predelivery Inspection Form*
1	Certificate of Quality
2	Key

Procedure

- Read the *Operator's Manual* and the engine owner's manual.
- Fill out the registration card.
- Complete the *Predelivery Inspection Form*.
- Review the *Certificate of Quality*.

Product Overview

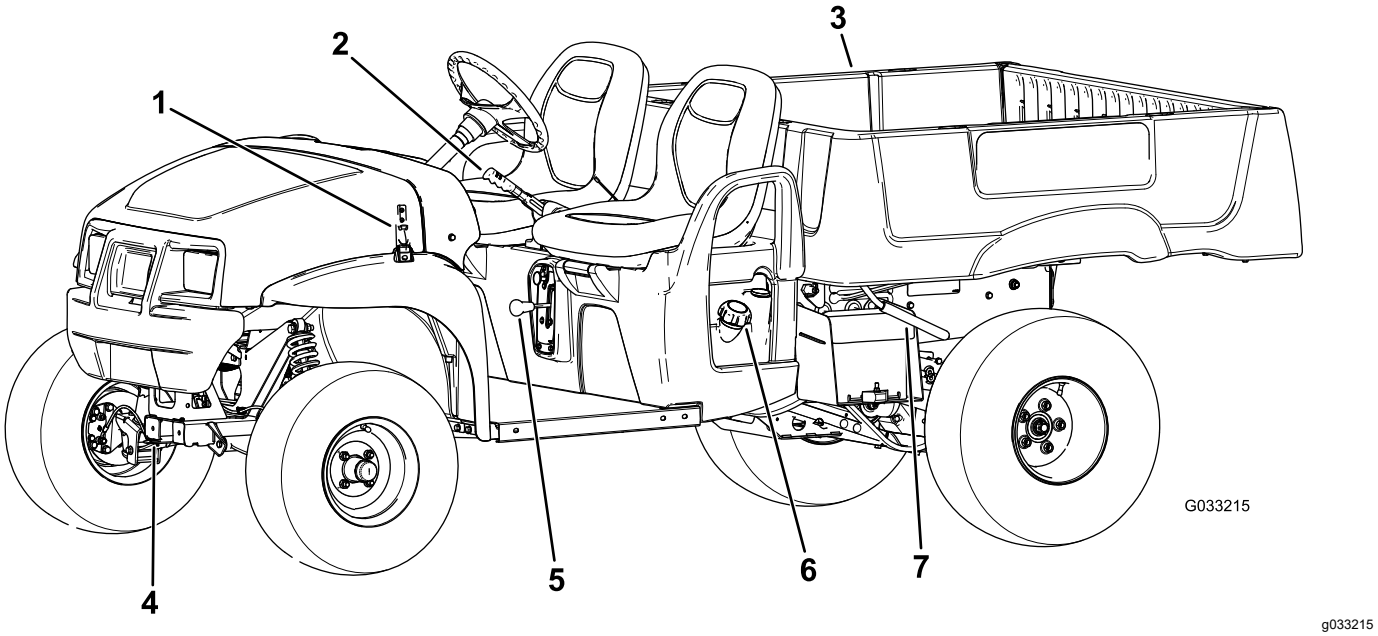

Figure 6

1. Hood latch
2. Parking-brake lever
3. Cargo bed
4. Towing tongue
5. Gear-shift selector
6. Fuel-tank cap
7. Cargo-bed lever

Controls

Become familiar with all the controls before you start the engine and operate the machine.

Control Panel

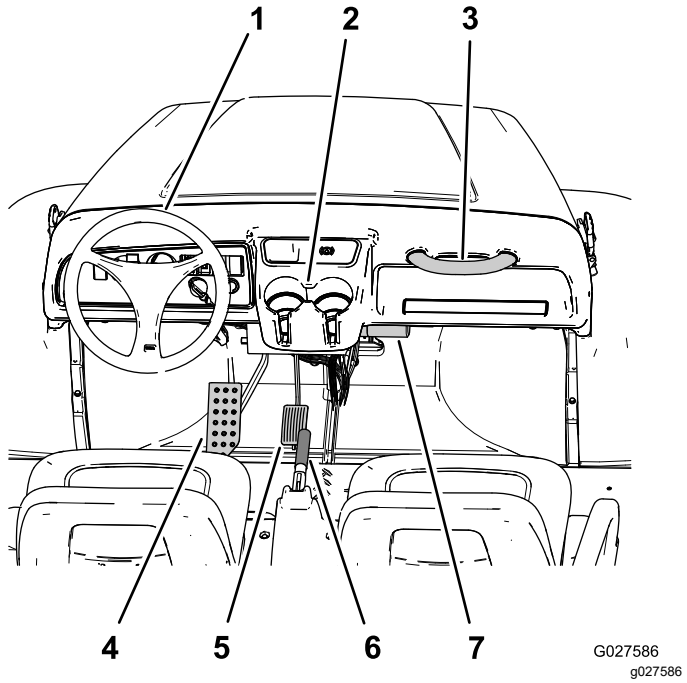

Figure 7

1. Steering wheel
2. Cup holder
3. Passenger handhold
4. Brake pedal
5. Accelerator pedal
6. Parking-brake handle (center console)
7. *Operator's Manual* storage tube

Accelerator Pedal

Use the accelerator pedal (Figure 7) to vary the ground speed of the machine. Pressing down the accelerator pedal starts the engine. Pressing the pedal farther increases the ground speed. Releasing the pedal slows the machine, and the engine shuts off.

Note: The maximum forward speed is 26 km/h (16 mph).

Brake Pedal

Use the brake pedal to stop or slow the machine (Figure 7).

⚠ CAUTION

Operating a machine with worn or incorrectly adjusted brakes can may result in personal injury.

If the brake pedal travels to within 25 mm (1 inch) of the machine floor board, adjust or repair the brakes.

Parking-Brake Lever

The parking-brake lever is located between the seats (Figure 6 and Figure 7). Whenever you shut off the engine, engage the parking brake to prevent the machine from accidentally moving. To engage the parking brake, pull up the parking-brake lever. To disengage the parking brake, push the lever down.

Gear-Shift Selector

The gear-shift selector is located between the seats and below the parking-brake lever. The gear-shift selector has 3 positions: FORWARD, REVERSE, and NEUTRAL (Figure 6).

Note: The engine starts and runs in any of the 3 positions.

Important: **Always stop the machine before changing gears.**

Horn Button

The horn button is located at the lower, left corner of the dash panel (Figure 8). Press the horn button to sound the horn.

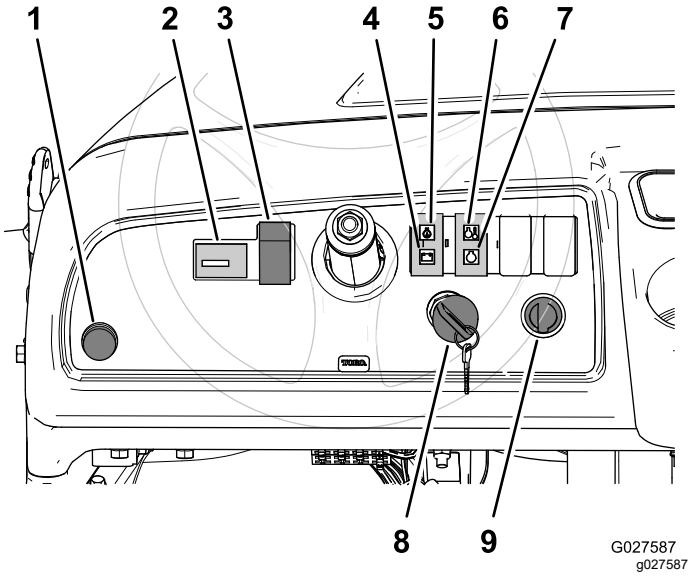

Figure 8

1. Horn button
2. Hour meter
3. Light switch
4. Battery light
5. Engine oil-pressure light
6. Engine coolant-temperature light
7. Glow plug indicator light
8. Key switch
9. Power point

Light Switch

Use the light switch (Figure 8) to illuminate the headlights. Push the light switch up to turn on the headlights. Push the light switch down to turn off the lights.

Hour Meter

The hour meter indicates the total hours of machine operation. The hour meter (Figure 8) starts to function whenever you rotate the key switch to the ON position or if the engine is running.

Battery Light

The battery light (Figure 8) turns on for several seconds when you first start the engine, and turns off when the engine is running. If the light remains on while the engine is running, the alternator, battery, or electrical system is damaged.

Engine Oil-Pressure Light

The engine oil-pressure light (Figure 8) warns you if the engine-oil pressure drops below a safe level to operate the engine. If the light comes on and remains lit, shut off the engine, and check the engine-oil level. Add oil to the engine if necessary; refer to Servicing the Engine Oil (page 31).

Note: The oil light may flicker; this is normal and no action is needed.

Engine Coolant-Temperature Light

The engine coolant-temperature light (Figure 8) warns you that the coolant temperature of the engine is too hot to continue operating the engine (the engine is overheating). Shut off the engine and allow the machine to cool down. Check the coolant level and the belts to the fan and water pump. Fill the coolant reservoir with coolant as necessary and replace any worn, damaged, or slipping belts.

Important: **If the engine overheating problem persists, contact your Authorized Service Dealer for diagnostics and repair.**

Glow-Plug Indicator Light

The glow-plug indicator light (Figure 8) illuminates red when the glow plugs are activated.

Important: **The glow-plug indicator light turns on for an additional 15 seconds when the switch returns to the START position.**

Key Switch

Use the key switch (Figure 8), to start and shut off the engine.

The key switch has 3 positions: OFF, ON, and START. Rotate the key clockwise to the ON position to activate the glow plugs. When the glow-plug-indicator light turns off, rotate the key clockwise to the START position. When the engine starts, turn the key counterclockwise to the RUN position.

To shut off the engine, rotate the key counterclockwise to the OFF position.

Power Point

Use the power point (Figure 8) to power optional 12 V electrical accessories.

Fuel Gauge

The fuel gauge (Figure 9) is located on the fuel tank next to the filler cap, at the left side of the machine. The gauge displays the amount of fuel in the tank.

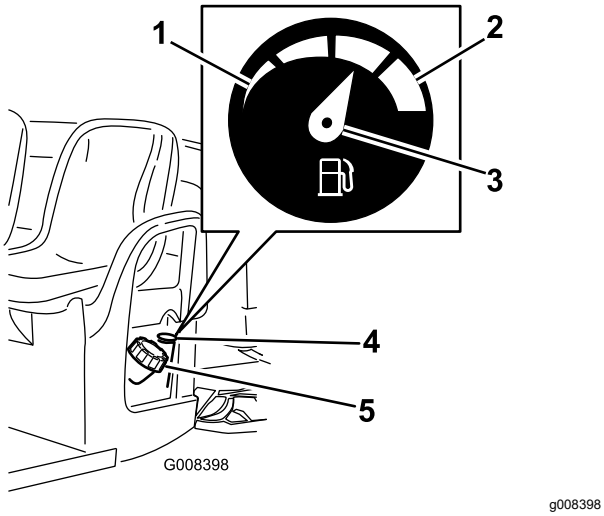

Figure 9

1. Empty
2. Full
3. Needle
4. Fuel gauge
5. Fuel-tank cap

Passenger Handholds

The passenger handholds are located on the right side of the dash panel and at the outside of each seat (Figure 10).

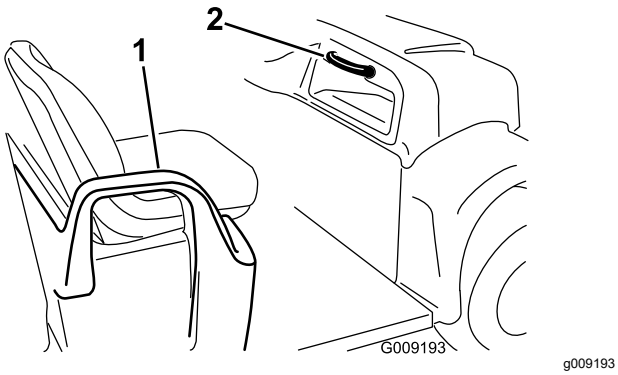

Figure 10

1. Handhold—hip restraint
2. Passenger handhold

Specifications

Note: Specifications and design are subject to change without notice.

Base weight	Dry 590 kg (1,300 lb)
Rated capacity (on level ground)	749 kg (1,650 lb) total, including 90.7 kg (200 lb) operator and 90.7 kg (200 lb) passenger, load, trailer tongue weight, gross trailer weight, accessories, and attachments
Gross vehicle weight (GVW)—on level ground	1341 kg (2,950 lb) total, including all of the weights listed above
Maximum cargo capacity (on level ground)	567 kg (1,250 lb) total, including trailer tongue weight and gross trailer weight
Towing capacity:	
Standard hitch	Tongue weight: 45 kg (100 lb) Gross trailer weight (GTW): 363 kg (800 lb)
Heavy-duty hitch	Tongue weight: 45 kg (100 lb) Gross trailer weight (GTW): 544 kg (1,200 lb)
Overall width	150 cm (59 inches)
Overall length	299 cm (117-3/4 inches)
Ground clearance	25 cm (10 inches) at the front with no load or operator, 18 cm (7 inches) at the rear with no load or operator
Wheel base	206 cm (81 inches)
Wheel tread (center line to center line)	125 cm (49 inches) in the front, 120 cm (47-1/4 inches) in the rear
Cargo bed length	117 cm (46 inches) inside, 133 cm (52-1/4 inches) outside
Cargo bed width	125 cm (49 inches) inside, 150 cm (59 inches) at outside of the molded fenders
Cargo bed height	25 cm (10 inches) inside
Maximum speed	26 km/h (16 mph)
Engine speed (non-adjustable)	Low idle: 1,200 to 1,300 rpm
	High idle: 3,420 to 3,520 rpm

Attachments/Accessories

A selection of Toro approved attachments and accessories is available for use with the machine to enhance and expand its capabilities. Contact your Authorized Service Dealer or authorized Toro distributor or go to www.Toro.com for a list of all approved attachments and accessories.

To ensure optimum performance and continued safety certification of the machine, use only genuine Toro replacement parts and accessories. Replacement parts and accessories made by other manufacturers could be dangerous, and such use could void the product warranty.

Operation

Note: Determine the left and right sides of the machine from the normal operating position.

Before Operation

Before Operation Safety

General Safety

- Never allow children or people who are not trained or physically capable to safely operate or service the machine. Local regulations may restrict the age of the operator. The owner is responsible for training all operators and mechanics.
- Become familiar with the safe operation of the equipment, operator controls, and safety signs.
- Shut off the machine, remove the key, and wait for all movement to stop before you leave the operator's position. Allow the machine to cool before adjusting, servicing, cleaning, or storing it.
- Know how to stop and shut off the machine quickly.
- Ensure that there are not more occupants (you and your passenger(s)) than the number of handholds equipped on the machine.
- Check that all safety devices and decals are in place. Repair or replace all safety devices and replace all illegible or missing decals. Do not operate the machine unless they are present and functioning properly.

Fuel Safety

- Use extreme care in handling fuel. It is flammable and its vapors are explosive.
- Extinguish all cigarettes, cigars, pipes, and other sources of ignition.
- Use only an approved fuel container.
- Do not remove the fuel cap or fill the fuel tank while the engine is running or hot.
- Do not add or drain fuel in an enclosed space.
- Do not store the machine or fuel container where there is an open flame, spark, or pilot light, such as on a water heater or other appliance.
- If you spill fuel, do not attempt to start the engine; avoid creating any source of ignition until the fuel vapors have dissipated.

Performing Daily Maintenance

Service Interval: Before each use or daily

Before starting the machine each day, perform the Each Use/Daily procedures listed in Maintenance (page 23).

Checking the Tire Pressure

Service Interval: Before each use or daily

Tire air pressure specification: 55 to 103 kPa (8 to 22 psi)

Important: **Do not exceed the maximum air pressure indicated on the sidewall of the tire.**

Note: The air pressure needed in the tires is determined by the payload that you intend to carry.

1. Check the air pressure in the tires.

   Note: The air pressure in the front and rear tires should be between 55 to 103 kPa (8 to 22 psi).

   - Use lower air pressure in the tires for lighter payloads, for less soil compaction, for a smoother ride, and to minimize tire marks on the ground.
   - Use higher air pressure in the tires for carrying heavier payloads at higher speeds.
2. If necessary, adjust the air pressure in the tires by adding or removing air in the tires.

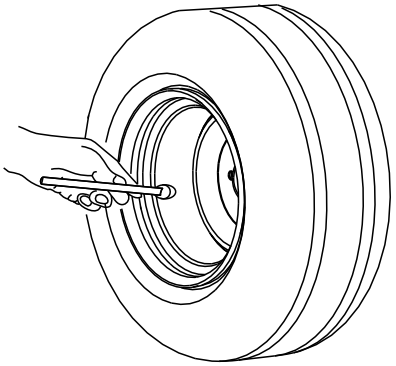

g001055

Figure 11

Adding Fuel

Recommended Fuel

The engine runs on clean, fresh diesel fuel with a minimum cetane rating of 40. Purchase fuel in quantities that you can use within 30 days to ensure fuel freshness.

Use summer-grade diesel fuel (No. 2-D) at temperatures above -7°C (20°F) and winter grade diesel fuel (No. 1-D or No. 1-D/2-D blend) below -7°C (20°F). Use of winter-grade diesel fuel at lower temperatures provides lower flash point and pour point characteristics, allowing easier starts and lessening the chances of chemical separation of the fuel due to lower temperatures.

Using summer-grade diesel fuel above -7°C (20°F) contributes toward longer life of the fuel-pump components.

Important: **Never use kerosene or gasoline in place of diesel fuel. Failure to observe this caution will damage the engine.**

Filling the Fuel Tank

Fuel-tank capacity: 26.5 L (7 US gallons)

1. Clean the area around the fuel-tank cap.
2. Remove the fuel-tank cap (Figure 12).

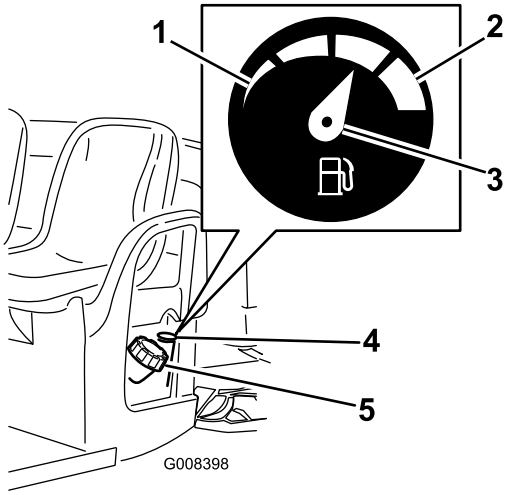

g008398

Figure 12

1. Empty
2. Full
3. Needle
4. Fuel gauge
5. Fuel-tank cap

3. Fill the tank to approximately 25 mm (1 inch) below the bottom of the filler neck and install the cap.

   Note: Do not overfill the fuel tank.

4. Install the fuel-tank cap securely.
5. Wipe up any spilled fuel.

Breaking in a New Machine

Service Interval: After the first 100 hours—Perform the guidelines for breaking in a new machine.

Perform the following guidelines to provide proper performance for the machine.

- Ensure that the brakes are burnished; refer to 4 Burnishing the Brakes (page 8).
- Check the fluid and engine-oil levels regularly. Remain alert for signs that the machine or its components are overheating.
- After starting a cold engine, let it warm up for about 15 seconds before using the machine.

  Note: Allow more time for the engine to warm up when operating in cold temperatures.
- Vary the machine speed during operation. Avoid fast starts and quick stops.
- A break-in oil for the engine is not required. Original engine oil is the same type specified for regular oil changes.
- Refer to Maintenance (page 23) for any special, low-hour checks.
- Check the front suspension positioning and adjust it, if necessary; refer to Adjusting the Front Wheel Alignment (page 39).

During Operation

During Operation Safety

General Safety

- The owner/operator can prevent and is responsible for accidents that may cause personal injury or property damage.
- Passengers should sit in the designated seating positions only. Do not carry passengers in the cargo bed. Keep bystanders and children out of the operating area.
- Wear appropriate clothing, including eye protection; long pants; substantial, slip-resistant footwear; and hearing protection. Tie back long hair and do not wear loose clothing or loose jewelry.
- Use your full attention while operating the machine. Do not engage in any activity that causes distractions; otherwise, injury or property damage may occur.
- Do not operate the machine while ill, tired, or under the influence of alcohol or drugs.
- Operate the machine outdoors or in a well-ventilated area only.
- Do not exceed the maximum gross vehicle weight (GVW) of the machine.
- Use extra caution when operating, braking, or turning the machine with a heavy load in the cargo bed.
- Carrying oversized loads in the cargo bed reduces the stability of the machine. Do not exceed the carrying capacity of the bed.
- Carrying material that cannot be bound to the machine adversely affects the steering, braking, and stability of the machine. When you carry material that cannot be bound to the machine, use caution when steering or braking.
- Carry a reduced load and reduce the ground speed of the machine when operating on rough, uneven terrain, and near curbs, holes, and other sudden changes in terrain. Loads may shift, causing the machine to become unstable.
- Before you start the machine, ensure that the transmission is in neutral, the parking brake is engaged, and you are in the operating position.
- You and your passengers should remain seated whenever the machine is moving. Keep your hands on the steering wheel; your passengers should use the handholds provided. Keep arms and legs within the machine body at all times.
- Operate the machine only in good visibility. Watch for holes, ruts, bumps, rocks, or other hidden objects. Uneven terrain could overturn the machine. Tall grass can hide obstacles. Use care when approaching blind corners, shrubs, trees, or other objects that may obscure your vision.
- Do not drive the machine near drop-offs, ditches, or embankments. The machine could suddenly roll over if a wheel goes over the edge or if the edge gives way.
- Always watch out for and avoid low overhangs such as tree limbs, door jambs, overhead walkways, etc.
- Look behind and down before reversing the machine to be sure of a clear path.
- When using the machine on public roads, follow all traffic regulations and use any additional accessories that may be required by law, such as lights, turn signals, slow-moving vehicle (SMV) signs, and others as required.
- If the machine ever vibrates abnormally, stop and shut off the machine immediately, wait for all movement to stop, and inspect for damage. Repair all damage to the machine before resuming operation.
- It can take longer to stop the machine on wet surfaces than on dry surfaces. To dry out wet brakes, drive slowly on a level surface while putting light pressure on the brake pedal.
- Operating the machine at high speed and then quickly stopping may cause the rear wheels to lock up, which impairs your control of the machine.
- Do not touch the engine, transmission, muffler, or muffler manifold while the engine is running, or soon after you shut off the engine, because these areas may be hot enough to cause burns.
- Do not leave a running machine unattended.
- Before you leave the operating position, do the following:
  - Park the machine on a level surface.
  - Shift the transmission to the NEUTRAL position.
  - Engage the parking brake.
  - Shut off the machine and remove the key.
  - Wait for all movement to stop.
- Do not operate the machine when there is the risk of lightning.
- Use accessories and attachments approved by The Toro® Company only.

Slope Safety

Note: A 2-post Rollover Protection System (ROPS) is available for this machine as an accessory. Use a ROPS if you will work next to drop-offs, near water, in rough terrain, or on a slope, which could result in

a rollover. Contact an authorized Toro distributor for more information.

Slopes are a major factor related to loss-of-control and tip-over accidents, which can result in severe injury or death.

- Survey the site to determine which slopes are safe for operating the machine and establish your own procedures and rules for operating on those slopes. Always use common sense and good judgment when performing this survey.
- If you feel uneasy operating the machine on a slope, do not do it.
- Keep all movement on slopes slow and gradual. Do not suddenly change the speed or direction of the machine.
- Avoid operating the machine on wet terrain. Tires may lose traction. A rollover can occur before the tires lose traction.
- Travel straight up and down a slope.
- If you begin to lose momentum while climbing a slope, gradually engage the brakes and slowly reverse the machine straight down the slope.
- Turning while going up or down a slope can be dangerous. If you must turn on a slope, do it slowly and cautiously.
- Heavy loads affect stability on a slope. Carry a reduced load and reduce your ground speed when operating on a slope or if the load has a high center of gravity. Secure the load to the cargo bed of the machine to prevent the load from shifting. Take extra care when hauling loads that shift easily (e.g., liquids, rock, sand, etc.).
- Avoid starting, stopping, or turning the machine on a slope, especially with a load. Stopping while going down a slope takes longer than stopping on level ground. If you must stop the machine, avoid sudden speed changes, which can cause the machine to tip or roll over. Do not engage the brakes suddenly when rolling rearward, as this may cause the machine to overturn.

Loading and Dumping Safety

- Do not exceed the gross vehicle weight (GVW) of the machine when operating it with a load in the cargo bed and/or towing a trailer; refer to Specifications (page 14).
- Distribute the load in the cargo bed evenly to improve the stability and control of the machine.
- Before dumping, ensure that there is no one behind the machine.
- Do not dump a loaded cargo bed while the machine is sideways on a slope. The change in weight distribution may cause the machine to overturn.

Operating the Cargo Bed

Raising the Cargo Bed

⚠ WARNING

A raised bed could fall and injure persons that are working beneath it.

- **Always use the prop rod to hold the bed up before working under the bed.**
- **Remove any load material from the bed before raising it.**

⚠ WARNING

Driving the machine with the cargo bed raised could cause the machine to tip or roll easier. You could damage the structure of the cargo bed if you operate the machine with the bed raised.

- **Operate the machine when the cargo bed is down.**
- **After emptying the cargo bed, lower it.**

⚠ CAUTION

If a load is concentrated near the back of the cargo bed when you release the latches, the bed may unexpectedly tip open, injuring you or bystanders.

- **Center loads in the cargo bed, if possible.**
- **Hold the cargo bed down and ensure that no one is leaning over the bed or standing behind it when releasing the latches.**
- **Remove all cargo from the bed before lifting the bed up to service the machine.**

1. Lift the lever on either side of the bed and lift the bed up (Figure 13).

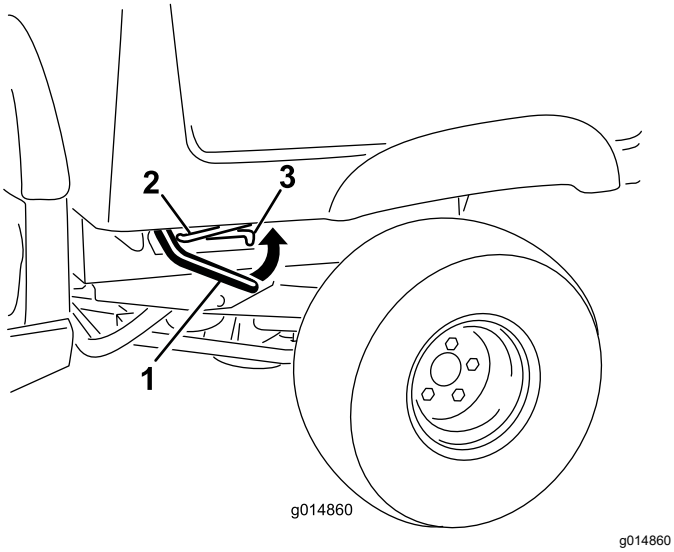

Figure 13

1. Lever
2. Prop rod
3. Detent slot

2. Pull the prop rod into the detent slot to secure the bed (Figure 14).

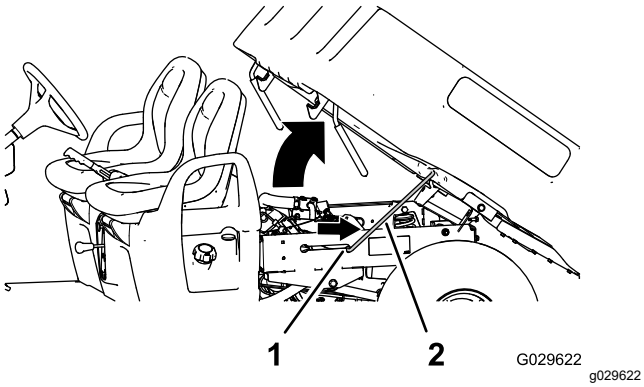

Figure 14

1. Detent slot
2. Prop rod

Lowering the Cargo Bed

⚠ WARNING

The weight of the bed may be heavy. Hands or other body parts could be crushed.

Keep your hands and other body parts clear when lowering the bed.

1. Raise the cargo bed slightly by lifting up the latch lever (Figure 13).
2. Pull the prop rod out of the detent slot (Figure 14).
3. Lower the bed until it latches securely into place (Figure 14).

Opening the Tailgate

1. Ensure that the cargo bed is down and latched.
2. Lift up the finger pulls at the back panel of the tailgate (Figure 15).

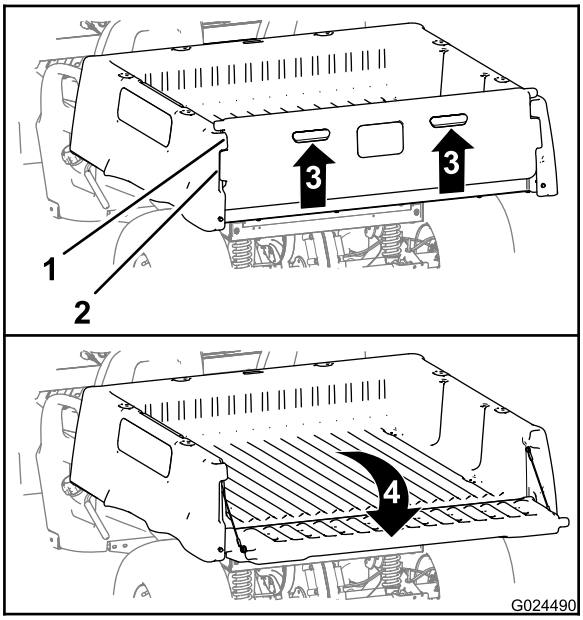

Figure 15

1. Tailgate flange (cargo bed)
2. Lock flange (tailgate)
3. Lift up (finger pull)
4. Rotate rearward and down

3. Align the lock flanges of the tailgate with the openings between the tailgate flanges of the cargo bed (Figure 15).
4. Rotate the tailgate rearward and down (Figure 15).

Closing the Tailgate

If you unloaded loose material such as sand, landscaping rock, or wood chips from the cargo bed of the machine, some of the material that you unloaded may have lodged in the hinge area of the tailgate. Perform the following before closing the tailgate.

1. Use your hands to remove as much of the material from the hinge area as possible.
2. Rotate the tailgate to approximately the 45° position (Figure 16).

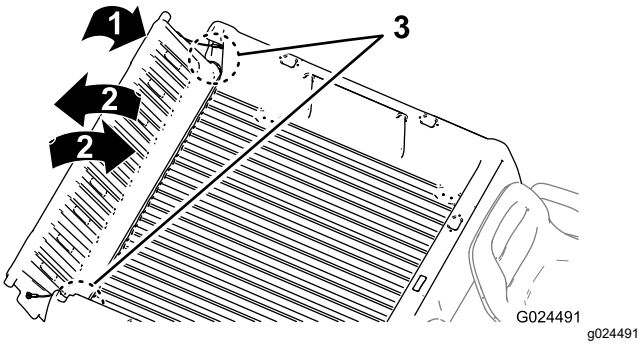

Figure 16

1. Rotate the tailgate to approximately the 45° position.
2. Rotate the tailgate back and forth several times.
3. Hinge area

3. Use a short, shaking motion to rotate the tailgate back and forth several times (Figure 16).

   Note: This action helps move material away from the hinge area.
4. Lower the tailgate and check for material remaining in the hinge area.
5. Repeat steps 1 through 4 until the material is removed from the hinge area.
6. Rotate the tailgate up and forward until the lock flanges of the tailgate are flush with the tailgate pocket in the cargo bed (Figure 15).

   Note: Raise or lower the tailgate in order to align the lock flanges of the tailgate with the vertical openings between the tailgate flanges of the cargo bed.
7. Lower the tailgate until it is seated in the back of the cargo bed (Figure 15).

   Note: The lock flanges of the tailgate are fully secured by the tailgate flanges of the cargo bed.

Starting the Engine

Important: **Do not attempt to push or tow the machine to get it started.**

1. Sit in the operator's seat, insert the key into the key switch, press down on the brake, and rotate the key clockwise to the ON position.

   Note: If the backup alarm is installed and the gear-shift selector is in the REVERSE position, the buzzer sounds to warn the operator.
2. When the glow-plug-indicator light turns off, rotate the key clockwise to the START position.
3. When the engine starts, turn the key counterclockwise to the RUN position.
4. Disengage the parking brake.

Stopping the Machine

Important: **When stopping the machine on an incline, use the service brakes to stop the machine and engage the parking brake to hold the machine in place. Using the accelerator to stall the machine on the hill can damage the machine.**

1. Remove your foot from the accelerator pedal.
2. Slowly press the brake pedal to apply the service brakes until the machine comes to a complete stop.

   Note: The stopping distance may vary depending on the machine load and speed.

Shutting Off the Engine

1. Park the machine on a level surface.
2. Engage the parking brake.
3. Rotate the key switch to the OFF position and remove the key.

Loading the Cargo Bed

Use the following guidelines when loading the cargo bed and operating the machine:

- Observe the weight capacity of the machine and limit the weight of the load that you carry in the cargo bed as described in Specifications (page 14) and on the gross vehicle weight tag of the machine.

  Note: The load rating is specified for machine operation on a level surface only.
- Reduce the weight of the load that you carry in the cargo bed when operating the machine on hills and rough terrain.
- Reduce the weight of the load that you carry when the materials are tall (and have a high center of gravity), such as a stack of bricks, landscaping timbers, or fertilizer bags. Distribute the load as low as possible to ensure that the load does not reduce your ability to see behind the machine when operating it.
- Keep loads centered by loading the cargo bed as follows:
  - Evenly position the weight in the cargo bed from side to side.

    Important: **Tipping over is more likely to occur if the cargo bed is loaded to 1 side.**
  - Evenly position the weight in the cargo bed from front to back.

Important: **Loss of steering control or the machine may tip over if you position the load behind the rear axle and the traction on the front tires is reduced.**

- Use extra caution when transporting oversized loads in the cargo bed, particularly when you cannot center the weight of the oversize load to the cargo bed.
- Whenever possible, secure the load by binding it to the cargo bed so that it does not shift.
- When transporting liquids, use caution when driving the machine uphill or downhill, when suddenly changing speed or stopping, or when driving over rough surfaces.

The capacity of the cargo box is 0.37 m^3 (13 ft^3). The amount (volume) of material that you can place in the bed without exceeding the load ratings of the machine can vary greatly depending on the density of the material.

Refer to the following table for load volume limits with various materials:

Material	Density	Maximum Cargo Box Capacity (on level ground)
Gravel, dry	1522 kg/m^3 (95 lb/ft^3)	Full
Gravel, wet	1922 kg/m^3 (120 lb/ft^3)	3/4 Full
Sand, dry	1442 kg/m^3 (90 lb/ft^3)	Full
Sand, wet	1922 kg/m^3 (120 lb/ft^3)	3/4 Full
Wood	721 kg/m^3 (45 lb/ft^3)	Full
Bark	<721 kg/m^3 (<45 lb/ft^3)	Full
Earth, packed	1602 kg/m^3 (100 lb/ft^3)	3/4 Full (approximately)

After Operation

After Operation Safety

General Safety

- Before you leave the operating position, do the following:
  - Park the machine on a level surface.
  - Shift the transmission to the NEUTRAL position.
  - Engage the parking brake.
  - Shut off the machine and remove the key.
  - Wait for all movement to stop.
- Allow the machine to cool before adjusting, servicing, cleaning, or storing it.
- Do not store the machine where there is an open flame, spark, or pilot light, such as on a water heater or other appliance.
- Keep all parts of the machine in good working condition and all hardware tightened.
- Maintain and clean the seat belt(s) as necessary.
- Replace all worn, damaged, or missing decals.

Hauling the Machine

- Use care when loading or unloading the machine into a trailer or a truck.
- Use full-width ramps for loading the machine into a trailer or a truck.
- Tie the machine down securely.

Refer to Figure 17 and Figure 18 for the tie-down locations on the machine.

Note: Load the machine on the trailer with the front of the machine facing forward. If that is not possible, secure the machine hood to the frame with a strap, or remove the hood and transport and secure it separately or the hood may blow off during transport.

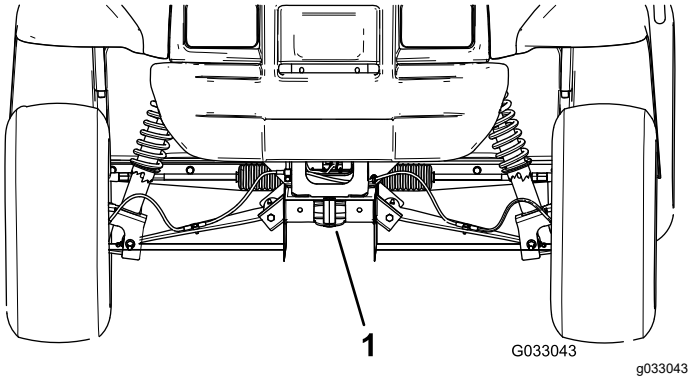

Figure 17

1. Towing tongue and tie-down point (front of the machine)

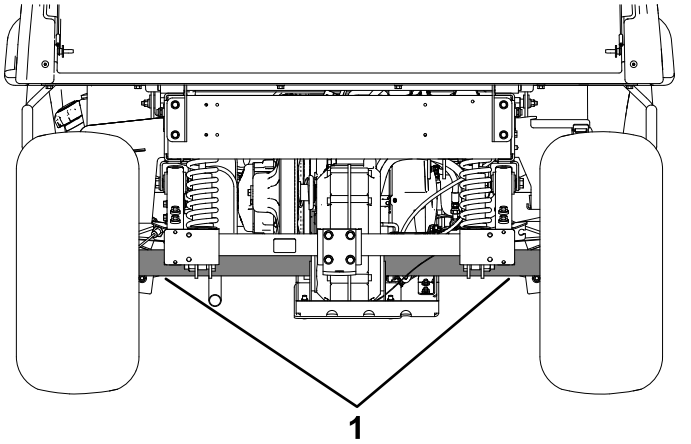

Figure 18

1. Rear tie-down points

Towing the Machine

In case of an emergency, you can tow the machine for a short distance; however, this should not be a standard operating procedure.

⚠ WARNING

Towing at excessive speeds could cause a loss of steering control, resulting in personal injury.

Never tow the machine at faster than 8 km/h (5 mph).

Towing the machine is a 2-person job. If you must move the machine a considerable distance, transport it on a truck or trailer; refer to Towing a Trailer (page 22)

1. Remove the drive belt from the machine; refer to Replacing the Drive Belt (page 46).
2. Affix a tow line to the tongue at the front of the machine frame (Figure 17).
3. Move the transmission to the NEUTRAL position and disengage the parking brake.

Towing a Trailer

The machine is capable of pulling trailers. A tow hitch is available for the machine. Contact your Authorized Service Dealer for details.

When hauling cargo or towing a trailer, do not overload your machine or trailer. Overloading either the machine or the trailer can cause poor performance or damage to the brakes, axle, engine, transaxle, steering, suspension, body structure, or tires.

Always load a trailer with 60% of the cargo weight in the front of the trailer. This places approximately 10% of the gross trailer weight (GTW) on the tow hitch of the machine.

To provide adequate braking and traction, always load the cargo bed when using a trailer. Do not exceed the GTW or GVW limits.

Avoid parking a machine with a trailer on a hill. If you must park on a hill, engage the parking brake, and chock the tires of the trailer.

Maintenance

Maintenance Safety

- Do not allow untrained personnel to service the machine.
- Before you leave the operating position, do the following:
  - Park the machine on a level surface.
  - Shift the transmission to the NEUTRAL position.
  - Engage the parking brake.
  - Shut off the machine and remove the key.
  - Wait for all movement to stop.
- Allow the machine to cool before adjusting, servicing, cleaning, or storing it.
- Support the machine with jack stands whenever you work under the machine.
- Do not work under a raised bed without the proper bed safety support in place.
- Do not charge the batteries while servicing the machine.
- To ensure that the entire machine is in good condition, keep all hardware properly tightened.
- To reduce the potential fire hazard, keep the machine area free of excessive grease, grass, leaves, and accumulation of dirt.
- If possible, do not perform maintenance while the machine is running. Keep away from moving parts.
- If you must run the machine to perform a maintenance adjustment, keep your hands, feet, clothing, and any parts of the body away from any moving parts. Keep bystanders away from the machine.
- Clean up oil and fuel spills.
- Check the parking brake operation as recommended in the maintenance schedule and adjust and service it as required.
- Keep all parts of the machine in good working condition and all the hardware properly tightened. Replace all worn or damaged decals.
- Never interfere with the intended function of a safety device or reduce the protection provided by a safety device.
- Do not overspeed the engine by changing the governor settings. To ensure safety and accuracy, have an Authorized Service Dealer check the maximum engine speed with a tachometer.
- If major repairs are ever necessary or assistance is required, contact an authorized Toro distributor.
- Altering this machine in any manner may affect the operation of the machine, performance, durability, or its use may result in injury or death. Such use could void the product warranty of The Toro® Company.

Recommended Maintenance Schedule(s)

Maintenance Service Interval	Maintenance Procedure
After the first 8 hours	• Check the condition of the drive belt.
After the first 50 hours	• Change the engine oil. • Change the engine-oil filter. • Adjust the engine-valve clearance.
After the first 100 hours	• Perform the guidelines for breaking in a new machine.
Before each use or daily	• Inspect the seat belt(s) for wear, cuts, and other damage. Replace the seat belt(s) if any component does not operate properly. • Check the tire pressure. • Check the engine-oil level. • Check gear-shift operation. • Inspect the primary drive clutch. • Check the radiator-coolant level. • Check the brake-fluid level. Check the brake-fluid level before you first start the engine. • Wash the machine.

Maintenance Service Interval	Maintenance Procedure
Every 100 hours	• Replace the air filter. Replace the air-filter element sooner if it dirty or damaged. • Check the condition of the tires and rims. • Torque the wheel-lug nuts. • Inspect the steering and suspension for loose or damaged components. • Check the front wheel camber and toe-in. • Check the transaxle-fluid level. • Check the operation of the neutral gear-shift position. • Clean the engine-cooling areas. • Inspect the brakes.
Every 150 hours	• Change the engine oil (twice as often in special operating conditions; refer to . • Change the engine-oil filter. Change the oil twice as often during special operating conditions.
Every 200 hours	• Clean the primary drive clutch (more often in dusty or dirty conditions). • Adjust the parking brake, if needed. • Check the condition and tension of the drive belt. • Inspect the service and parking brakes.
Every 300 hours	• Grease the front wheel bearings.
Every 400 hours	• Inspect the fuel lines and connections. • Visually inspect the brakes for worn brake shoes.
Every 600 hours	• Adjust the engine-valve clearance.
Every 800 hours	• Replace the fuel filter. • Change the transaxle fluid.
Every 1,000 hours	• Change the radiator coolant. • Change the brake fluid.

Note: Download a free copy of the electrical schematic by visiting www.Toro.com and searching for your machine from the Manuals link on the home page.

Important: **Refer to your engine owner's manual for additional maintenance procedures.**

⚠ WARNING

Failing to properly maintain the machine could result in premature failure of machine systems, causing possible harm to you or bystanders.

Keep the machine well maintained and in good working order as indicated in these instructions.

⚠ CAUTION

Only qualified and authorized personnel should maintain, repair, adjust, or inspect the machine.

- **Avoid fire hazards and have fire-protection equipment present in the work area. Do not use an open flame to check fluid levels or leakage of fuel, battery electrolyte, or coolant.**
- **Do not use open pans of fuel or flammable cleaning fluids for cleaning parts.**

⚠ CAUTION

If you leave the key in the switch, someone could accidently start the engine and seriously injure you or other bystanders.

Shut off the engine and remove the key from the switch before you perform any maintenance.

Daily Maintenance Checklist

Duplicate this page for routine use.

Maintenance Check Item	For the week of:						
	Monday	Tuesday	Wednesday	Thursday	Friday	Saturday	Sunday
Check the brake and parking brake operation.							
Check the gear shift/neutral operation.							
Check the fuel level.							
Check the engine-oil level.							
Check the brake-fluid level.							
Check the transaxle-fluid level.							
Inspect the air filter.							
Inspect the engine-cooling fins.							
Check for unusual engine noises.							
Check for unusual operating noises.							
Check the tire pressure.							
Check for fluid leaks.							
Check the instrument operation.							
Check the accelerator operation.							
Wash the machine.							
Touch up any damaged paint.							

Maintaining the Machine under Special Operating Conditions

Important: **If the machine is subjected to any of the conditions listed below, perform maintenance twice as frequently:**

- Desert operation
- Cold climate operation—below 10°C (50°F)
- Trailer towing
- Frequent operation in dusty conditions
- Construction work
- After extended operation in mud, sand, water, or similar dirty conditions, do the following:
  - Have your brakes inspected and cleaned as soon as possible. This prevents any abrasive material from causing excessive wear.
  - Wash the machine using water alone or with a mild detergent.

    Important: **Do not use brackish or reclaimed water to clean the machine.**

Pre-Maintenance Procedures

Many of the subjects covered in this maintenance section require raising and lowering the bed. To prevent serious injury or death, take the following precautions.

Preparing the Machine for Maintenance

1. Park the machine on a level surface.
2. Shift the transmission to the NEUTRAL position.
3. Engage the parking brake.
4. Shut off the engine and remove the key.
5. Empty and raise the cargo bed.

Lifting the Machine

⚠ DANGER

The machine may be unstable when using a jack. The machine could slip off the jack, injuring anyone beneath it.

- **Do not start the machine while the machine is on a jack.**
- **Always remove the key from the key switch before getting off the machine.**
- **Block the tires when the machine is supported by lifting equipment.**
- **Use jack stands to support the machine once you have lifted it.**

Important: **Whenever you run the machine for routine maintenance and/or diagnostics, ensure that the rear wheels of the machine are 25 mm (1 inch) off the ground, with the rear axle supported on jack stands.**

- The lifting point at the front of the machine is located at the front of the frame, behind the towing tongue (Figure 19).

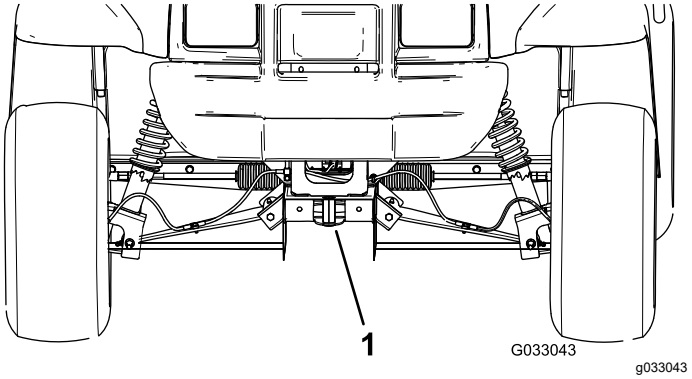

Figure 19

1. Front lifting point

- The lifting point at the rear of the machine is located under the axle tubes (Figure 20).

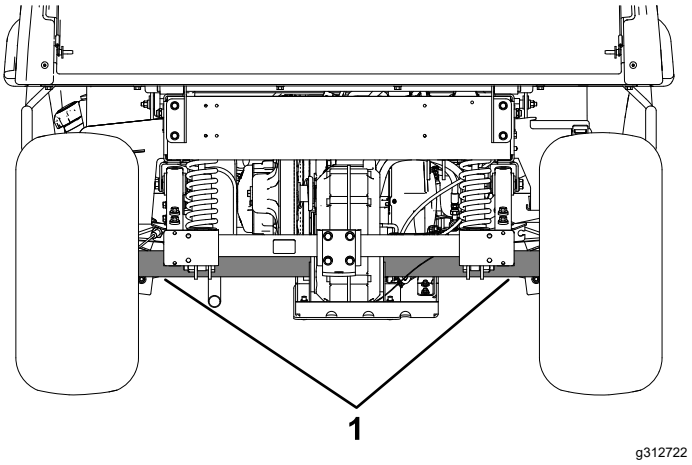

Figure 20

1. Rear lifting points

Accessing the Hood

Raising the Hood

1. Lift up the handle of the rubber latches on each side of the hood (Figure 21).

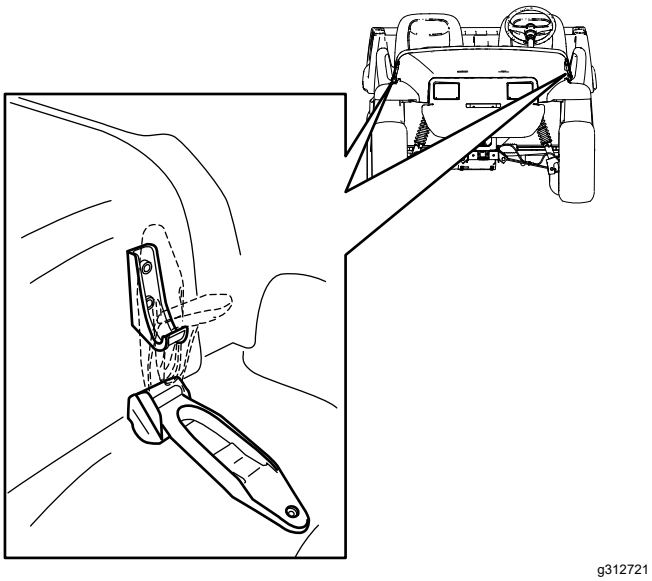

Figure 21

2. Raise the hood.

Closing the Hood

1. Gently lower the hood.
2. Secure the hood by aligning the rubber latches onto the latch anchors on each side of the hood (Figure 21).

Lubrication

Greasing the Front Wheel Bearings

Service Interval: Every 300 hours

Grease specification: Mobilgrease XHP™-222

Removing the Hub and Rotor

1. Lift the front of the machine and support it with jack stands.
2. Remove the 4 lug nuts that secure the wheel to the hub (Figure 22).

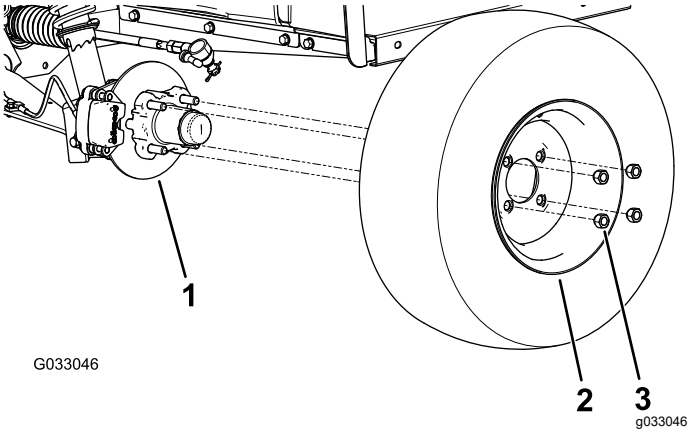

Figure 22

1. Hub
2. Wheel
3. Lug nut

3. Remove the flange-head bolts (3/8 x 3/4 inch) that secure the bracket for the brake assembly to the spindle and separate the brake from the spindle (Figure 23).

   Note: Support the brake assembly before proceeding to the next step.

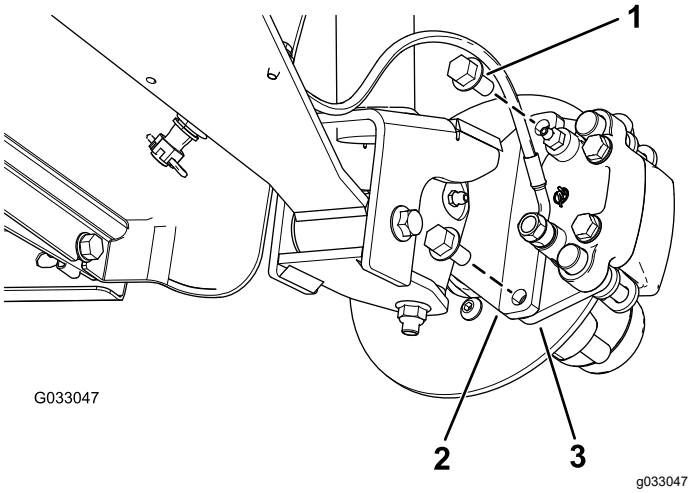

Figure 23

1. Flange-head bolts (3/8 x 3/4 inch)
2. Spindle
3. Caliper bracket (brake assembly)

4. Remove the dust cap from the hub (Figure 24).

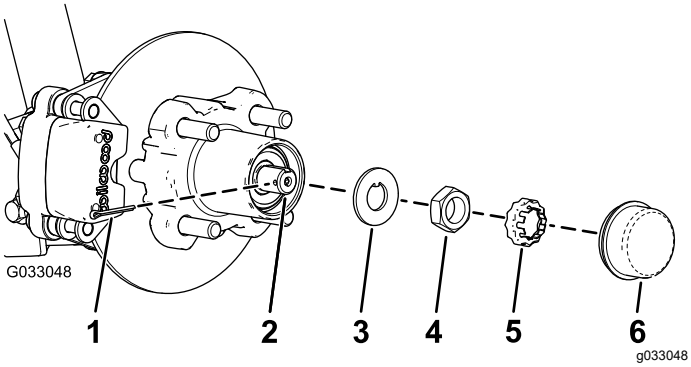

Figure 24

1. Cotter pin
2. Spindle
3. Tab washer
4. Spindle nut
5. Nut retainer
6. Dust cap

5. Remove the cotter pin and nut retainer from the spindle and spindle nut (Figure 24).
6. Remove the spindle nut from the spindle, and separate the hub and rotor assembly from the spindle (Figure 24 and Figure 25).

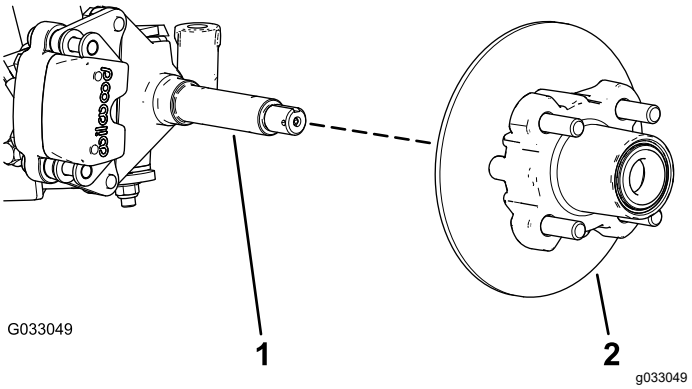

Figure 25

1. Spindle
2. Hub and rotor assembly

7. Wipe clean the spindle with a rag.
8. Repeat steps 1 through 7 to the hub and rotor at the other side of the machine.

Greasing the Wheel Bearings

1. Remove the outboard bearing and bearing race from the hub (Figure 26).

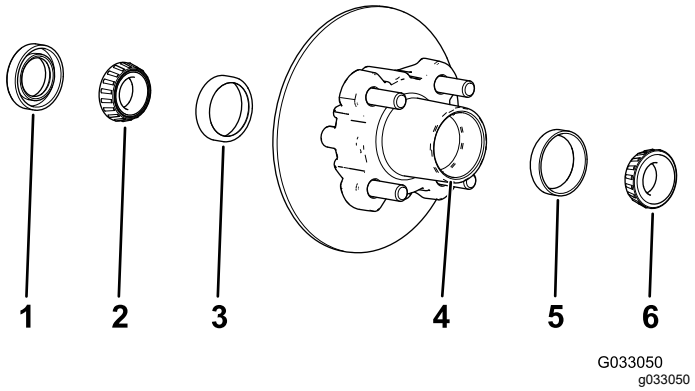

Figure 26

1. Seal
2. Inboard bearing
3. Inboard-bearing race
4. Bearing cavity (hub)
5. Outboard-bearing race
6. Outboard bearing

2. Remove the seal, inboard bearing from the hub (Figure 26).
3. Wipe clean the seal and check for wear and damage.

   Note: Do not use cleaning solvent to clean the seal. Replace the seal if it is worn or damaged.
4. Clean the bearings and races, and check these parts for wear and damage.

   Note: Replace all worn or damaged parts. Ensure that the bearings and races are clean and dry.
5. Clean the cavity of the hub of all grease, dirt, and debris (Figure 26).
6. Pack the bearings with the specified grease.
7. Fill the cavity of hub 50 to 80% full of the specified grease (Figure 26).
8. Assemble the inboard bearing onto the race at the inboard side of the hub and install the seal (Figure 26).
9. Repeat steps 1 through 8 to the bearings for the other hub.

Installing the Hub and Rotor

1. Apply a light coat of the specified grease to the spindle (Figure 27).

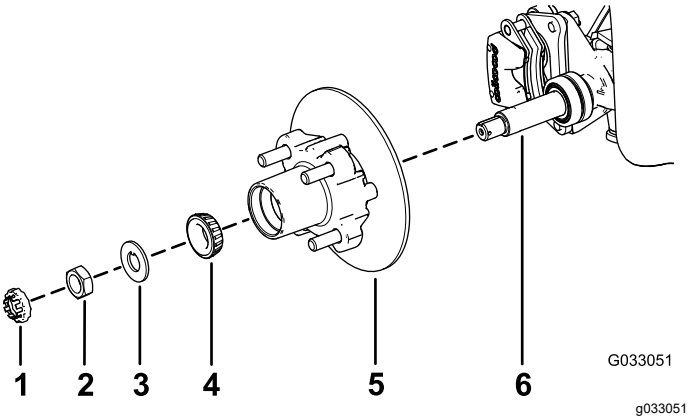

Figure 27

1. Nut retainer
2. Spindle nut
3. Tab washer
4. Outer bearing
5. Hub, rotor, inner bearing, race, and seal
6. Spindle

2. Assemble the hub and rotor onto the spindle with the rotor inboard (Figure 27).
3. Assemble the outboard bearing onto the spindle and seat the bearing to the outboard race (Figure 27).
4. Assemble the tab washer onto the spindle (Figure 27).
5. Thread the spindle nut onto the spindle and tighten the nut to 15 N·m (11 ft-lb), while rotating the hub to seat the bearing (Figure 27).
6. Loosen the spindle nut until the hub rotates freely.
7. Torque the spindle nut to 170 to 225 N·cm (15 to 20 in-lb).
8. Install the retainer over the nut and check the alignment of the slot in the retainer and the hole in the spindle for the cotter pin (Figure 28).

   Note: If the slot in the retainer and the hole in the spindle are not aligned, tighten the spindle nut to align the slot and hole to a maximum torque of 226 N·cm (20 in-lb) on the nut.

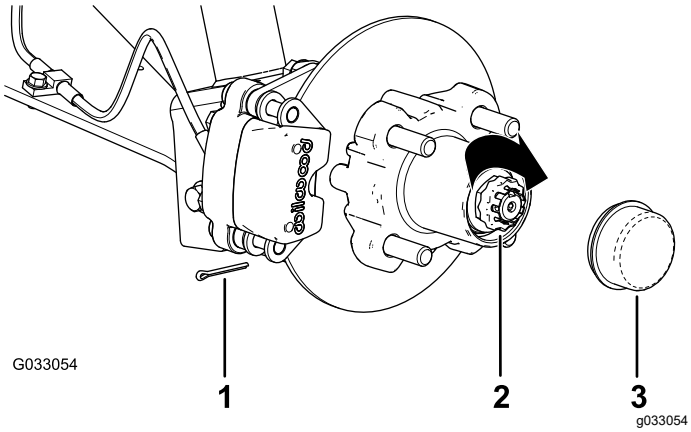

Figure 28

1. Cotter pin
2. Nut retainer
3. Dust cap

9. Install the cotter pin and bend each legs around the retainer (Figure 28).
10. Install the dust cap onto the hub (Figure 28).
11. Repeat steps 1 through 10 for the hub and rotor at the other side of the machine.

Installing the Brakes and Wheels

1. Clean the 2 flange-head bolts (3/8 x 3/4 inch) and apply a coat of medium-strength thread-locking compound to the threads of the bolts.
2. Align the brake pads to either side of the rotor (Figure 23) and the holes in the caliper bracket with the holes in the brake mount of the spindle frame (Figure 27).
3. Secure the caliper bracket to the spindle frame (Figure 23) using the 2 flange-head bolts (3/8 x 3/4 inch).

   Torque the 2 flange-head bolts to 47 to 54 N·m (35 to 40 ft-lb).
4. Align the holes in the wheel to the studs of the hub and assemble the wheel to the hub with the valve stem outward (Figure 22).

   Note: Ensure that the mounting surface of the wheel is flush with the hub.
5. Secure the wheel to the hub using the lug nuts (Figure 22).

   Torque the lug nuts to 108 to 122 N·m (80 to 90 ft-lb).
6. Repeat steps 1 through 5 for the brake and wheel on the other side of the machine.

Engine Maintenance

Engine Safety

- Shut off the engine, remove the key, and wait for all moving parts to stop before checking the oil or adding oil to the crankcase.
- Keep your hands, feet, face, clothing, and other body parts away from the muffler and other hot surfaces.

Servicing the Air Filter

Service Interval: Every 100 hours Replace the air-filter element sooner if it dirty or damaged.

Note: Service the air filter more frequently if operating conditions are extremely dusty or sandy.

Checking the Air Filter

1. Raise the cargo bed and secure it with the prop rod.
2. Check the air-filter body for damage that could possibly cause an air leak (Figure 29).

   Note: Ensure that the air-filter cover is sealing around the air-filter housing.

   Note: Replace a damaged air-filter cover or housing.

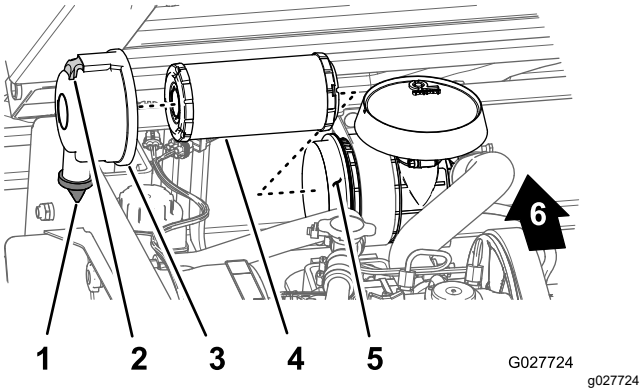

Figure 29

1. Dirt-ejection port
2. Latch
3. Air-filter cover
4. Air-filter element
5. Air-filter housing
6. Rear of the machine

3. Pull the latch outward and rotate the air-filter cover counterclockwise (Figure 29).
4. Remove the cover from the air-filter body.
5. Gently slide the air-filter element out of the air-filter housing (Figure 29) to reduce the amount of dust dislodged.

Note: Avoid knocking the filter against the air-filter housing.

6. Inspect the air-filter element.
   - If the air-filter element is clean, install the filter element.
   - If the air-filter element is damaged, replace the filter element; refer to Replacing the Air Filter (page 31).

Replacing the Air Filter

1. Remove the air-filter element.
2. Inspect the new filter for shipping damage.

   Note: Check the sealing end of the filter.

   Important: **Do not install a damaged filter.**
3. Install the new air filter; refer to Installing the Air Filter (page 31).

Installing the Air Filter

Important: **To prevent engine damage, always operate the engine with the complete air-filter assembly installed.**

Note: Do not use a damaged element.

Note: Cleaning a used air-filter element is not recommended due to the possibility of damage to the filter media.

1. Clean the dirt-ejection port located on the air-filter cover (Figure 29).
2. Remove the rubber outlet valve from the cover, clean the cavity, and replace the outlet valve (Figure 29).
3. Insert the air-filter element into the air-filter housing by applying pressure to the outer rim of the element to seat it into the air-filter housing (Figure 29).

   Note: Ensure that the filter seals properly by applying pressure to the outer rim of the filter when installing it. Do not press on the flexible center of the filter.
4. Align the air-filter cover with the air-filter housing with the rubber outlet valve in a downward position (approximately between the 5 o'clock and 7 o'clock positions when viewed from the end) as shown in Figure 29.
5. Secure the cover to the housing with the latches (Figure 29).
6. Lower the cargo bed.

Servicing the Engine Oil

Note: Change the oil more frequently when operating conditions are extremely dusty or sandy.

Note: Dispose of the used engine oil and oil filter at a certified recycling center.

Engine-Oil Specifications

Oil Type: Detergent oil (API service CH-4, CI-4, CJ-4, or higher)

Crankcase Capacity: 1.4 L (1.5 US qt) when the filter is changed

Viscosity: See the table below.

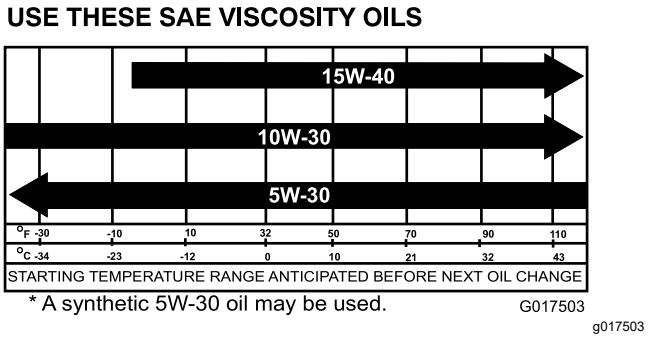

Figure 30

Checking the Engine-Oil Level

Service Interval: Before each use or daily

1. Park the machine on a level surface.
2. Engage the parking brake.
3. Shut off the engine and remove the key.
4. Raise the cargo bed.
5. Use a rag to clean around the oil dipstick (Figure 31) so that dirt cannot fall into the dipstick tube or oil-filler neck and damage the engine.

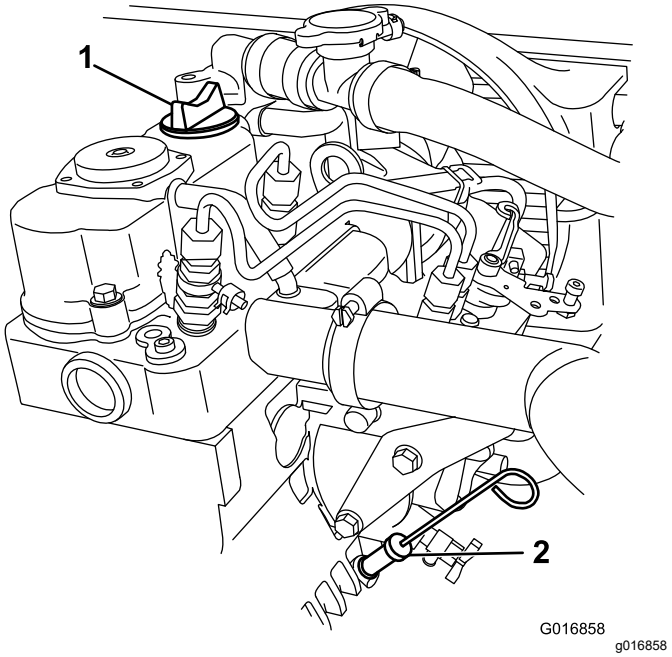

Figure 31

1. Fill cap
2. Oil dipstick

6. Remove the dipstick and wipe it clean.
7. Slide the dipstick into the dipstick tube and ensure that fully seats (Figure 31).
8. Pull the dipstick out and look at the end.

   Note: Add the oil slowly and check the oil level often during this process. **Do not overfill the engine with oil**.
9. Install the oil dipstick and firmly seat it (Figure 31).
10. Lower the cargo bed.

Changing the Engine Oil

Service Interval: After the first 50 hours

Every 150 hours (twice as often in special operating conditions; refer to Maintaining the Machine under Special Operating Conditions (page 25).

1. Park the machine on a level surface.
2. Engage the parking brake.
3. Start the machine and let the engine run for a few minutes.
4. Shut off the engine and remove the key.
5. Raise the cargo bed and secure it with the prop rod.
6. Disconnect the negative battery cable; refer to Disconnecting the Battery (page 34).
7. Place a drain pan under the drain plug (Figure 32).

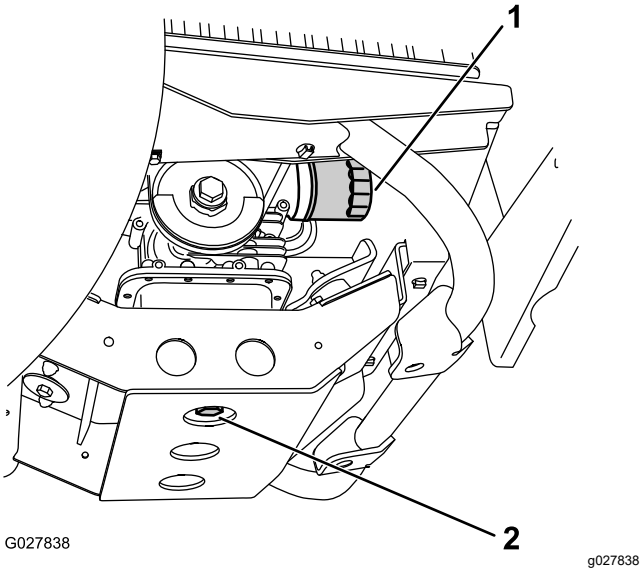

Figure 32

1. Engine-oil filter
2. Drain plug

8. Remove the drain plug (Figure 32).

   Note: Allow the oil to completely drain from the engine.
9. Install the drain plug and seal (Figure 32) and torque the plug to 45 to 53 N·m (33 to 39 ft-lb).
10. Pour oil into the fill opening until the oil level is up to the Full mark on the dipstick.
11. Add the oil slowly and check the level often during this process.

    Note: Do not overfill the engine with oil.
12. Install the oil-fill cap and dipstick firmly in place.
13. Connect the battery and lower the cargo bed.

Changing the Engine-Oil Filter

Service Interval: After the first 50 hours

Every 150 hours/Yearly (whichever comes first) Change the oil twice as often during special operating conditions.

1. Drain the oil from the engine.
2. Remove the existing oil filter (Figure 32).
3. Apply a light coat of clean oil to the new filter gasket.
4. Thread the new filter onto the filter adapter until the gasket contacts the mounting plate, then tighten the filter an additional 1/2 to 3/4 turn (Figure 32).

   Important: **Do not overtighten the oil filter.**
5. Fill the crankcase with the specified oil (Figure 30).

6. Start and run the engine to check for oil leaks.
7. Shut off the engine and check the engine-oil level.

   Note: If necessary, add the specified oil into the engine until the oil level is at the Full mark on the dipstick.

Fuel System Maintenance

Inspecting Fuel Lines and Connections

Service Interval: Every 400 hours/Yearly (whichever comes first)

Inspect the fuel lines, fittings, and clamps for signs of leaking, deterioration, damage, or loose connections.

Note: Repair any damaged or leaking fuel system component before using the machine.

Replacing the Fuel Filter

Service Interval: Every 800 hours/Yearly (whichever comes first)

1. Raise the bed and support it with the prop rod.
2. Rotate the key switch to the OFF position and remove the key.
3. Place a drain pan under the fuel filter.
4. Unscrew the fuel filter from the bracket (Figure 33).

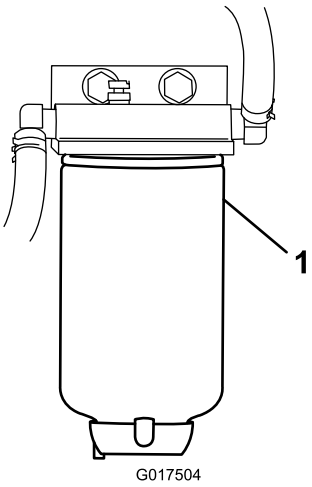

g017504

Figure 33

1. Fuel filter

5. Install the replacement filter by turning it until the filter contacts the top of the bracket, then tighten it an additional 3/4 of a turn.

Electrical System Maintenance

Electrical System Safety

- Disconnect the battery before repairing the machine. Disconnect the negative terminal first and the positive last. Connect the positive terminal first and the negative last.
- Charge the battery in an open, well-ventilated area, away from sparks and flames. Unplug the charger before connecting or disconnecting the battery. Wear protective clothing and use insulated tools.

Servicing the Battery

Battery voltage: 12 V with 300 A (cold-cranking) at -18°C (0°F).

- Always keep the battery clean and fully charged.
- If the battery terminals are corroded, clean them with a solution of 4 parts water and 1 part baking soda.
- Apply a light coating of grease to the battery terminals to prevent corrosion.

Disconnecting the Battery

⚠ WARNING

Incorrect battery cable routing could damage the machine and cables, causing sparks. Sparks can cause the battery gasses to explode, resulting in personal injury.

- **Always disconnect the negative (black) battery cable before disconnecting the positive (red) cable.**
- **Always connect the positive (red) battery cable before connecting the negative (black) cable.**
- **Always keep the battery strap in place to protect and secure the battery.**

⚠ WARNING

Battery terminals or metal tools could short against metal machine components, causing sparks. Sparks can cause the battery gasses to explode, resulting in personal injury.

- **When removing or installing the battery, do not allow the battery terminals to touch any metal parts of the machine.**
- **Do not allow metal tools to short between the battery terminals and metal parts of the machine.**

1. Squeeze the sides of the battery cover and remove the cover from the top of the battery (Figure 34).

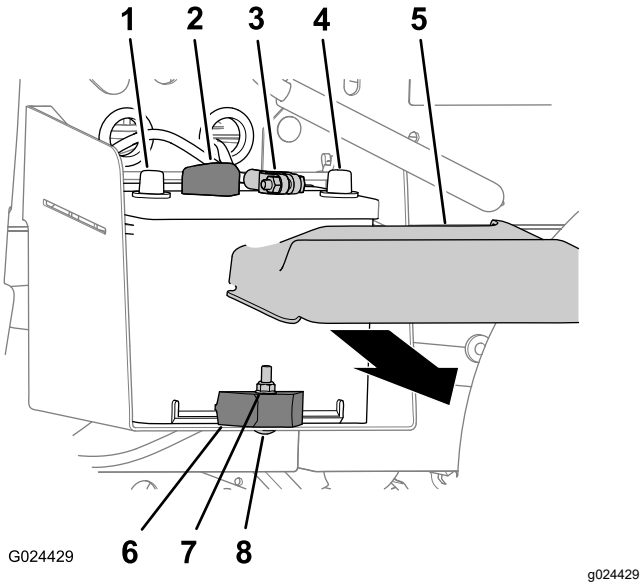

Figure 34

1.	Positive battery terminal	5.	Battery cover
2.	Positive battery cable	6.	Battery clamp
3.	Negative battery cable	7.	Locknut
4.	Negative battery terminal	8.	Carriage bolt

2. Disconnect the negative battery cable from the terminal of the battery (Figure 34).
3. Disconnect the positive battery cable from the terminal of the battery (Figure 34).

Removing the Battery

1. Disconnect the battery cables; refer to Disconnecting the Battery (page 34).
2. Remove the locknut, carriage bolt, and battery clamp that secures the battery to the battery tray (Figure 34).
3. Remove the battery from the battery tray (Figure 34).

Installing the Battery

1. Align the battery to the battery tray of the machine (Figure 34).

   Note: Ensure that the positive and negative posts of the battery are aligned as shown in Figure 34.

2. Secure the battery to the battery tray with the battery clamp, carriage bolt, and locknut (Figure 34).
3. Connect the battery cables; refer to Connecting the Battery (page 35).

Connecting the Battery

1. Connect the positive battery cable to the terminal of the battery (Figure 34).
2. Connect the negative battery cable to the terminal of the battery (Figure 34).
3. Install the battery cover onto the top of the battery (Figure 34).

Charging the Battery

⚠ WARNING

Charging the battery produces gasses that can explode.

Never smoke near the battery and keep sparks and flames away from battery.

Important: **Always keep the battery fully charged. This is especially important to prevent battery damage when the temperature is below 0°C (32°F).**

1. Remove the battery from the machine; refer to Disconnecting the Battery (page 34).
2. Connect a 3 to 4 A battery charger to the battery posts. Charge the battery at a rate of 3 to 4 A for 4 to 8 hours (12 V).

   Note: Do not overcharge the battery.

3. Install the battery; refer to Installing the Battery (page 35).

Storing the Battery

If you are storing the machine for more than 30 days, remove the battery and charge it fully. Either store it on the shelf or on the machine. Leave the cables disconnected if it is stored on the machine. Store the battery in a cool atmosphere to avoid quick deterioration of the charge in the battery. To prevent the battery from freezing, make sure that it is fully charged.

Replacing the Fuses

There are 7 fuses in the electrical system. They are located beneath the hood (Figure 35).

Alarm/Power Point	10 A
Engine	10 A
Headlights	10 A
Machine fuse	15 A
Lift	15 A
Rear lift	15 A
Horn	30 A

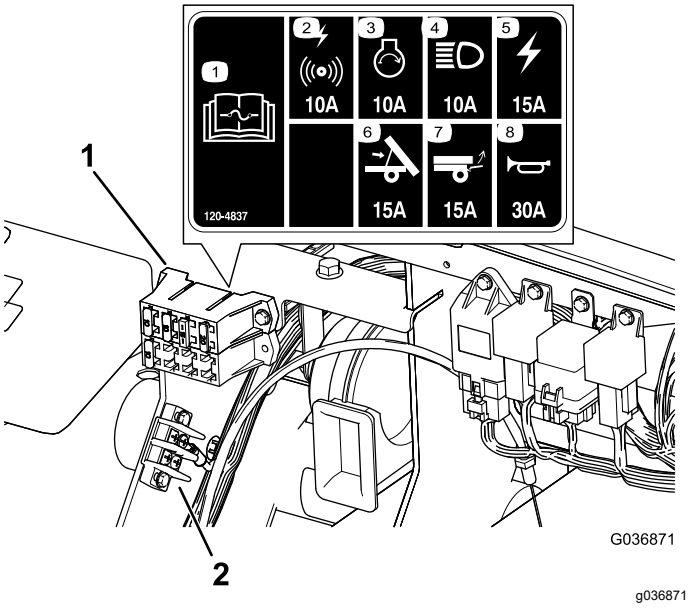

Figure 35

1. Fuse block
2. Ground block

Maintaining the Headlights

Replacing the Bulbs

⚠ CAUTION

If you install a higher wattage bulb than the system is designed for, you may damage the 12 V power supply, or at a minimum, blow the fuse.

Always use the specified Toro LED bulb to prevent this issue.

⚠ CAUTION

The bulbs become extremely hot when in operation. Handling a hot bulb can cause severe burns and personal injury.

Always allow enough time to for the bulbs to cool before replacing them. Use care whenever handling the bulbs.

Specification: See your *Parts Catalog*.

1. Disconnect the battery; refer to Disconnecting the Battery (page 34).
2. Open the hood.
3. Disconnect the electrical connector for the harness from the connector of the lamp assembly at the back of the headlight housing (Figure 36).

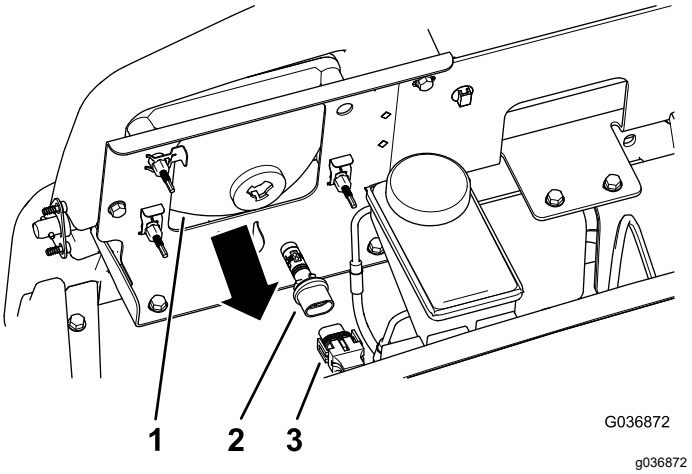

Figure 36

1. Headlight housing
2. Lamp assembly
3. Harness-electrical connector

4. Rotate the lamp assembly 1/4 turn counterclockwise and moving it rearward, out of the headlight housing (Figure 36).
5. Insert the new lamp assembly and headlight housing and align the tabs in the lamp assembly with the slots in the headlight housing (Figure 36).
6. Secure lamp assembly by turning it 1/4 turn clockwise (Figure 36).
7. Connect the electrical connector for the harness to the connector of the new lamp assembly (Figure 36).
8. Connect the battery and close the hood; refer to Connecting the Battery (page 35).

Replacing the Headlight

1. Disconnect the battery; refer to Disconnecting the Battery (page 34).
2. Open the hood; refer to Raising the Hood (page 27).
3. Disconnect the electrical connector for the harness from the connector of the lamp assembly (Figure 37).

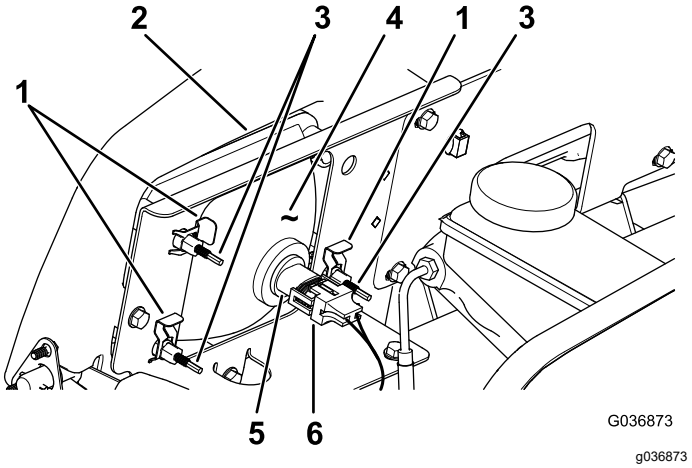

Figure 37

1. Speed clip
2. Opening in the bumper
3. Adjustment screw
4. Headlight
5. Lamp assembly
6. Harness-electrical connector

4. Remove the speed clips that secure the headlight to the headlight bracket (Figure 37).

   Note: Retain all parts for installation of the new headlight.
5. Remove the headlight assembly by moving it forward through the opening in the front bumper (Figure 37).
6. Install the new headlight through the opening in the bumper (Figure 37).

   Note: Ensure the adjustment posts are lined up with the holes in the mounting bracket behind the bumper.
7. Secure the headlight assembly with the speed clips that you removed in step 4.
8. Connect the electrical connector for the harness to the connector of the lamp assembly (Figure 37).
9. Adjust the headlights to direct the beams to the desired position, refer to Adjusting the Headlights (page 37).

Adjusting the Headlights

Use the following procedure to adjust the headlight beam position whenever a headlight assembly is replaced or removed.

1. Turn the key switch to the ON position, and turn on the headlights.
2. At the back of the headlight assembly, rotate adjustment screws (Figure 37) to pivot the headlight assembly and align the position of the cast beam.

Drive System Maintenance

Maintaining the Tires

Service Interval: Every 100 hours—Check the condition of the tires and rims.

Every 100 hours—Torque the wheel-lug nuts.

1. Inspect the tires and rims for signs of wear and damage.

   Note: Operating accidents, such as hitting curbs, can damage a tire or rim and also disrupt wheel alignment, so inspect tire condition after an accident.

2. Torque the wheel lug nuts to 108 to 122 N·m (80 to 90 ft-lb).

Inspecting the Steering and Suspension Components

Service Interval: Every 100 hours—Inspect the steering and suspension for loose or damaged components.

With the steering wheel at the centered position (Figure 38), turn the steering wheel to the left or right. If you turn the steering wheel more than 13 mm (1/2 inch) to the left or right, and the tires do not turn, check the following steering and suspension components to ensure that they are not loose or damaged:

- Steering shaft to the steering-rack assembly joint

  Important: **Inspect the condition and security of the pinion-shaft seal (Figure 39).**

- Steering-rack assembly tie rods

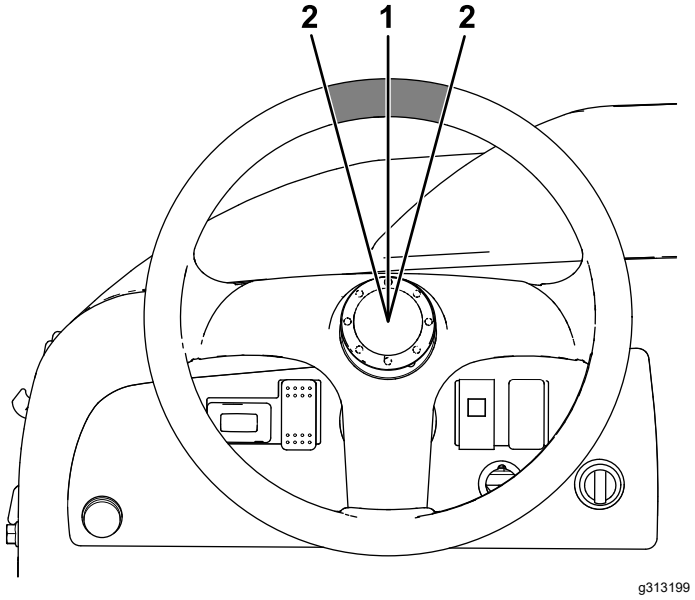

Figure 38

1. Steering wheel at the centered position
2. 13 mm (1/2 inch) from the center of the steering wheel

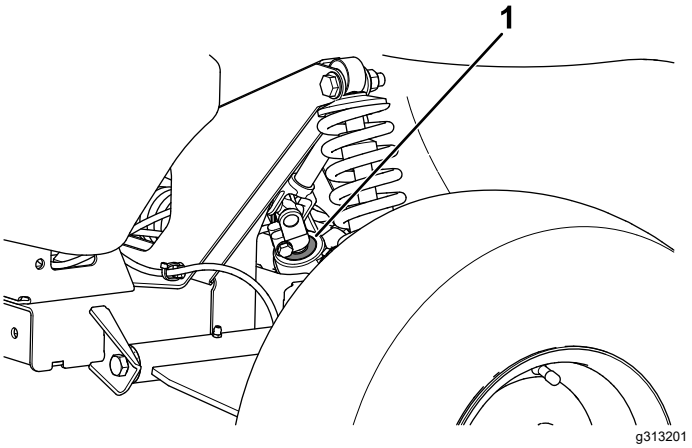

Figure 39

1. Pinion-shaft seal

Adjusting the Front Wheel Alignment

Service Interval: Every 100 hours/Yearly (whichever comes first)—Check the front wheel camber and toe-in.

Preparing to Adjust Camber or Toe-in

1. Check the tire pressure to ensure that the front tires are inflated to 82 kPa (12 psi).
2. Either add weight to the driver's seat equal to the average operator who will run the machine, or have an operator sit on the seat. The weight or operator must remain on the seat for the duration of the adjustment procedure.
3. On a level surface, roll the machine straight back 2 to 3 m (6 to 10 ft) and then straight forward to the original starting position. This allows the suspension to settle into the operating position.

Adjusting the Camber

Owner provided tools: spanner wrench, Toro Part 132-5069; refer to your authorized Toro distributor.

Important: **Make the camber adjustments only if you are using a front attachment or if there is uneven tire wear.**

1. Check the camber alignment at each wheel; the alignment should be as close to neutral (zero) as possible.

   Note: The tires should be aligned with the tread evenly on the ground to reduce uneven wear.
2. If the wheel camber is out of alignment, use the spanner wrench to rotate the collar on the shock absorber to align the wheel (Figure 40).

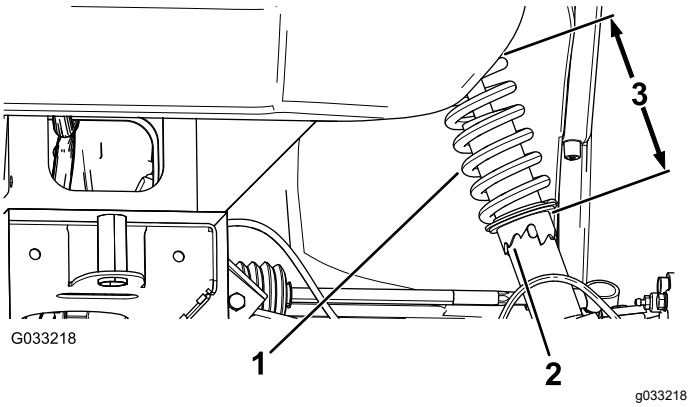

Figure 40

1. Shock-absorber spring
2. Collar
3. Spring length

Adjusting the Front Wheel Toe-in

Important: **Before adjusting toe-in, ensure that the camber adjustment is as close to neutral as possible; refer to Adjusting the Camber (page 39).**

1. Ensure that the front tires are facing straight ahead.
2. Measure the distance between both of the front tires at the axle height at both the front and rear of the front tires (Figure 41).

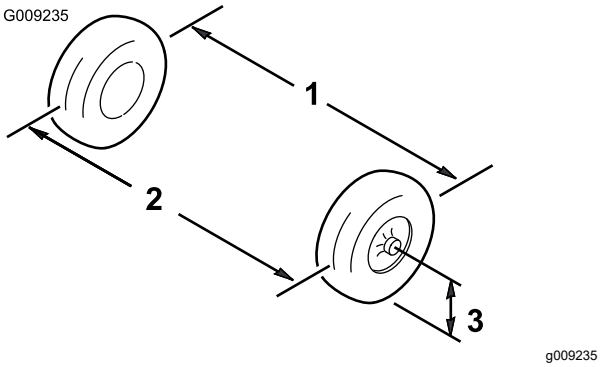

Figure 41

1. Tire center line—back
2. Tire center line—front
3. Axle center line

3. If the measurement does not fall within 0 to 6 mm (0 to 1/4 inch), loosen the jam nuts at the outer end of the tie rods (Figure 42).

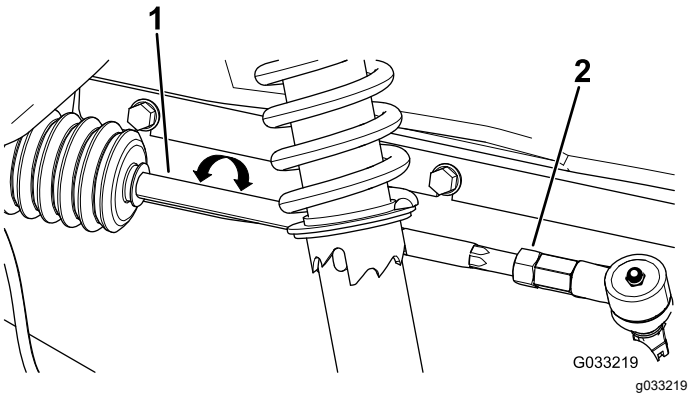

Figure 42

1. Tie rod
2. Jam nut

4. Rotate both tie rods to move the front of the tire inward or outward.
5. Tighten the tie rod jam nuts when the adjustment is correct.
6. Ensure that there is full travel of the steering wheel in both directions.

Checking the Transaxle-Fluid Level

Service Interval: Every 100 hours

Fluid Type: SAE 10W30 (API service SJ or higher)

1. Park the machine on a level surface, shift the transmission to the NEUTRAL position, engage the parking brake, shut off the engine, and remove the key.
2. Remove the bolt from the level-indicating hole (Figure 43).

   Note: The transaxle fluid level should be at the bottom of the level indicator hole.

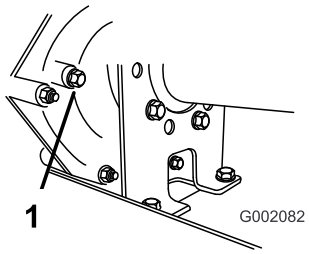

g002082

Figure 43

1. Level-indicator hole

3. If the transaxle fluid is not level with the bottom of the level indicating hole, fill the reservoir with the specified fluid; refer to Changing the Transaxle Fluid (page 40).

Changing the Transaxle Fluid

Service Interval: Every 800 hours/Yearly (whichever comes first)

Fluid Type: SAE 10W30 (API service SJ or higher)

Fluid Capacity: 1.4 L (1.5 US qt)

1. Park the machine on a level surface, shift the transmission to the NEUTRAL position, engage the parking brake, shut off the engine, and remove the key.
2. Wipe the area around the fill and drain plugs clean with a rag (Figure 44).

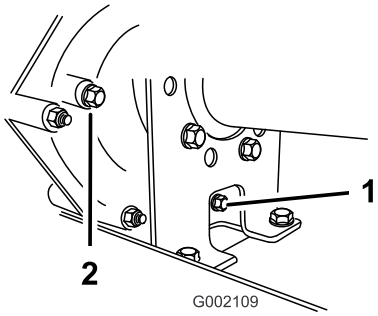

g002109

Figure 44

1. Drain plug
2. Fill plug

3. Align a drain pan with a capacity of 2 L (2.1 qt) or more under the drain plug.
4. Remove the fill plug by rotating it counterclockwise (Figure 44).

   Note: Retain the fill plug and gasket for installation in step 8.
5. Remove the drain plug by rotating it counterclockwise (Figure 44).

   Note: Retain the drain plug and gasket for installation in step 6.

   Note: Allow the fluid to drain from the transaxle completely.
6. Install and tighten the drain plug and gasket into the drain-plug hole of the transmission (Figure 44).

   Note: Dispose of the used fluid at a certified recycling center.
7. Fill the reservoir (Figure 45) through the fill-plug hole with approximately 1.4 L (1.5 US qt) of the specified fluid or until the fluid level in the transmission is even with the bottom of the threads. (Figure 44).

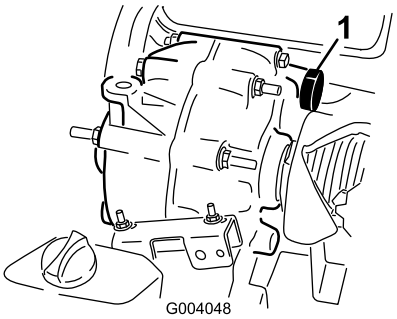

g004048

Figure 45

1. Fluid fill

8. Install and tighten the fill plug and gasket into the fill-plug hole of the transmission (Figure 44).
9. Start the engine and operate the machine.

10. Check the fluid level and add more fluid if the level is below the threads of the fill-plug hole (Figure 44).

Checking and Adjusting Neutral

Service Interval: Every 100 hours

When performing routine maintenance and/or engine diagnostics, the transaxle must be shifted into NEUTRAL (Figure 46). The machine has a NEUTRAL position on the shift lever, which controls the neutral in the transaxle. Perform the following steps to ensure that the neutral shift lever operates the transaxle neutral correctly:

1. Shift the transmission to the NEUTRAL position
2. Ensure that the neutral bracket is in the NEUTRAL position (level to the cable mounting bracket located below the shift bracket) by turning the driven clutch (Figure 46).

   Note: The machine should not roll back and forth. If it does, manually move the neutral bracket to the NEUTRAL position.

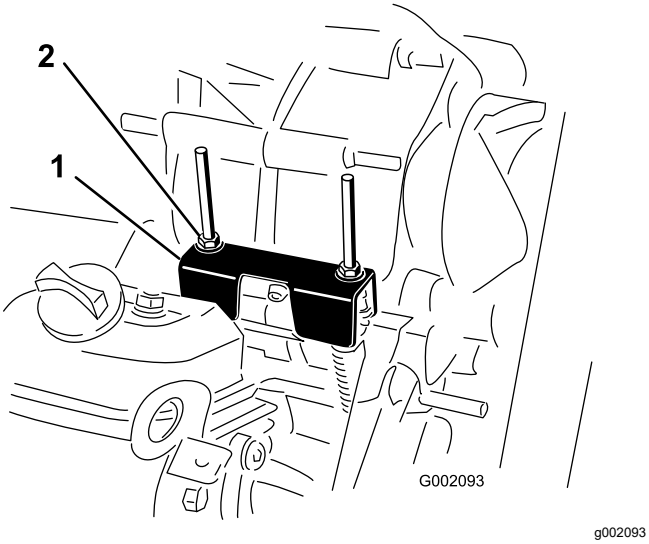

Figure 46

1. Neutral bracket
2. Locknuts

3. Rotate 1 of the locknuts (Figure 46) to achieve a 0.762 to 1.524 mm (0.030 to 0.060 inch) gap between the bottom of the nut/washer and the neutral bracket.

   Note: You must hold the threaded shaft below the bracket when adjusting the locknut position on top.
4. Rotate the other locknut to achieve a 0.76 to 1.52 mm (0.03 to 0.06 inch) gap between the bottom of the nut/washer and the neutral bracket.
5. Pull up on each shift cable an ensure that there is a 0.76 to 1.52 mm (0.03 to 0.06 inch) between the nut/washer and the neutral bracket (Figure 47).

   Note: If there is a not a gap, adjust the nuts to achieve the specified gap.

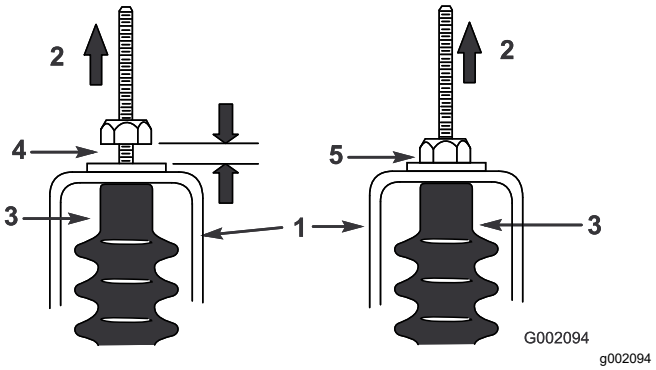

Figure 47

1. Neutral bracket
2. Pull up
3. Cable boot
4. 0.76 to 1.52 mm (0.03 to 0.06 inch) gap
5. **Wrong**—adjust the to achieve a gap of 0.76 to 1.52 mm (0.03 to 0.06 inch)

6. Start the engine and shift into FORWARD, REVERSE, and NEUTRAL several times to ensure that the neutral bracket is operating properly.

Inspecting the Primary Drive Clutch

Service Interval: Before each use or daily

Clutch operation should be monitored daily for proper shifting. If shifting is sticky or sluggish, or the clutch does not return completely to neutral when idling, the clutch requires a simple cleaning.

Note: Focus debris removal in and around moving parts.

1. Park the machine on a level surface, engage the parking brake, shut off the engine, and remove the key.
2. Raise and secure the cargo bed.
3. Remove dirt and mud buildup on the clutch with water and dry the clutch immediately with compressed air to remove excess water and debris.

   Note: Remaining debris may be removed using a fast-drying contact cleaner.

Maintaining the Primary Drive Clutch

Service Interval: Every 200 hours—Clean the primary drive clutch (more often in dusty or dirty conditions).

Note: Operating the machine with a dirty clutch can increase wear to internal components.

1. Park the machine on a level surface, engage the parking brake, shut off the engine, and remove the key.
2. Raise and secure the cargo bed.
3. Remove the 6 flange-head bolts securing the clutch cover.
4. Set aside the cover, spacer, and spring (Figure 48).

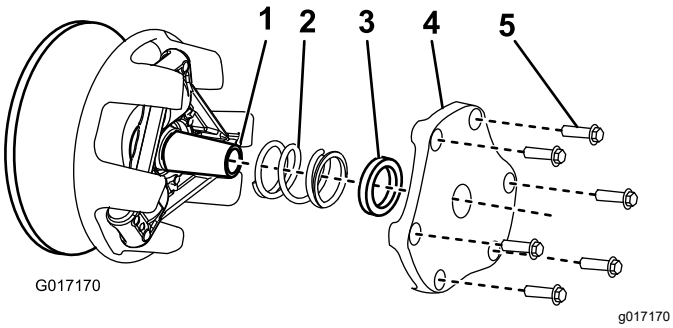

Figure 48

1. Clutch shaft
2. Spring
3. Spacer
4. Clutch cover
5. Flange-head bolt

5. Remove dirt and mud buildup with water and dry immediately with compressed air to remove excess water and debris.
6. Remove any remaining debris using a fast-drying contact cleaner or brake cleaner.

   Note: Remove the debris in and around moving parts.
7. If debris or buildup exists around the belt or along the clutch shaft, use a fine abrasive pad or a similar product to remove it.
8. Install the spring, clutch cover, and flange-head bolts.
9. Torque the bolts to 12 to 13.5 N·m (105 to 120 in-lb).

Cooling System Maintenance

Cooling System Safety

- Swallowing engine coolant can cause poisoning; keep out of reach from children and pets.
- Discharge of hot, pressurized coolant or touching a hot radiator and surrounding parts can cause severe burns.
  - Always allow the engine to cool at least 15 minutes before removing the radiator cap.
  - Use a rag when opening the radiator cap, and open the cap slowly to allow steam to escape.
- Do not operate the machine without the covers in place.
- Keep your fingers, hands and clothing clear of rotating fan and drive belt.
- Shut off the engine and remove the key before performing maintenance.

Cleaning the Engine-Cooling Areas

Service Interval: Every 100 hours Clean the cooling system twice as often during special operating conditions; refer to Maintaining the Machine under Special Operating Conditions (page 25).

Important: **Operating the engine with a blocked rotating screen, dirty or plugged cooling fins, or with the cooling shrouds removed, causes engine damage due to overheating.**

Important: **Never clean the engine with a pressure washer because water could contaminate the fuel system.**

Clean the rotating screen, cooling fins, and external surfaces of the engine.

Note: Clean the engine cooling components more often under extremely dusty and dirty conditions.

Servicing the Radiator

Checking the Radiator-Coolant Level

Service Interval: Before each use or daily

Note: Use a 50/50 mix of ethylene glycol and water for coolant.

1. Park the machine on a level surface, shut off the engine, engage the parking brake, and remove the key.
2. Remove the radiator-overflow tank cap (Figure 49).
3. If the coolant level is low, fill the tank with coolant to the bottom of the filler neck.

   Note: Do not overfill.
4. Replace the radiator-overflow tank cap and clean any spills.

Changing the Radiator Coolant

Service Interval: Every 1,000 hours/Every 2 years (whichever comes first)

⚠ CAUTION

If the engine has been running, the pressurized, hot coolant can escape and cause burns.

- **Do not open the radiator cap when the engine is running.**
- **Allow engine to cool at least 15 minutes or until the radiator cap is cool enough to touch without burning your hand.**
- **Use a rag when opening the radiator cap, and open the cap slowly to allow steam to escape.**

Note: Use a 50/50 mix of ethylene glycol and water for coolant.

1. Park the machine on a level surface, shut off the engine, engage the parking brake, and remove the key.
2. Remove the fill cap (Figure 49) and fill with coolant.

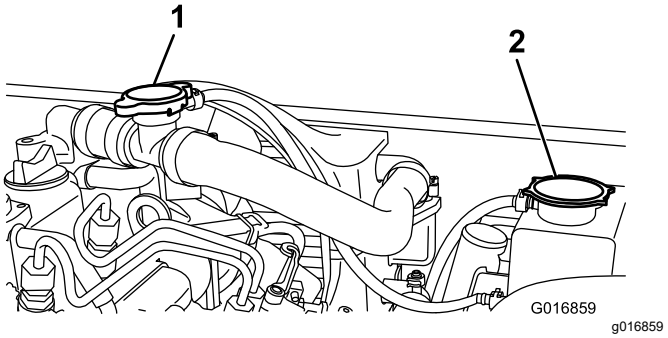

Figure 49

1. Fill cap
2. Radiator-overflow tank cap

3. Replace the fill cap and remove the radiator-overflow tank cap (Figure 49).

   Note: Never leave both caps off at the same time; this adversely affects the filling of the tank.
4. Fill with coolant to the bottom of the filler neck.
5. Replace the radiator-overflow tank cap and clean any spills.

Brake Maintenance

Inspecting the Brakes

Service Interval: Every 100 hours

Important: **Brakes are a critical safety component of the machine. Closely inspect them at the recommended service interval to ensure optimum performance and safety.**

- Inspect the brake lining for wear or damage. If the lining (brake pad) thickness is less than 1.6 mm (1/16 inch), replace the brake lining.
- Inspect the backing plate and other components for signs of excessive wear or deformation. Replace any deformed components.
- Check the brake-fluid level; refer to Checking the Brake-Fluid Level (page 45).

Adjusting the Parking-Brake Handle

Service Interval: Every 200 hours

1. Remove the handgrip from the parking-brake lever (Figure 50).

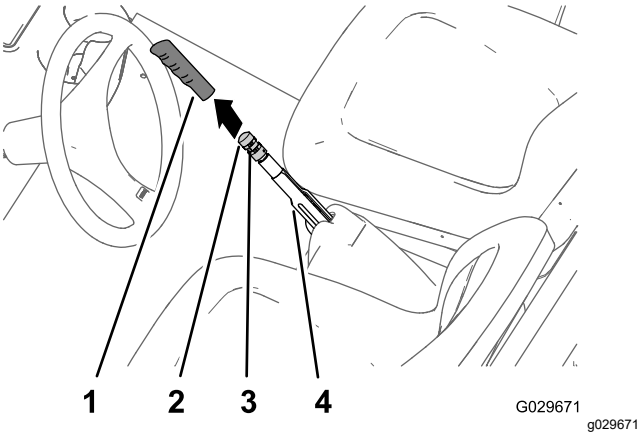

Figure 50

1. Handgrip
2. Brake-adjustment knob
3. Set screw
4. Parking-brake lever

2. Loosen the set screw securing the brake-adjustment knob to the parking-brake lever (Figure 50).
3. Rotate the brake-adjustment knob until you reach a force of 133 to 156 N (30 to 35 lbf) to engage the parking-brake lever (Figure 50).

   Note: If you rotated the brake-adjustment knob the full travel of the adjuster, and cannot attain the force of 133 to 156 N (30 to 35 lbf) required to engage the parking-brake lever, perform the procedure for adjusting the brake cables; refer to Adjusting the Brake Cables (page 44).
4. Tighten the set screw and install the hand grip (Figure 50).

Adjusting the Brake Cables

1. Remove the handgrip from the parking-brake lever (Figure 50).
2. Loosen the set screw (Figure 50) securing the brake-adjustment knob to the parking-brake lever, disengage the parking brake, and loosen the brake-adjustment knob.
3. At the bottom of the machine, loosen the rear jam nut for the threaded adjuster of the parking-brake cable 4 turns (Figure 51).

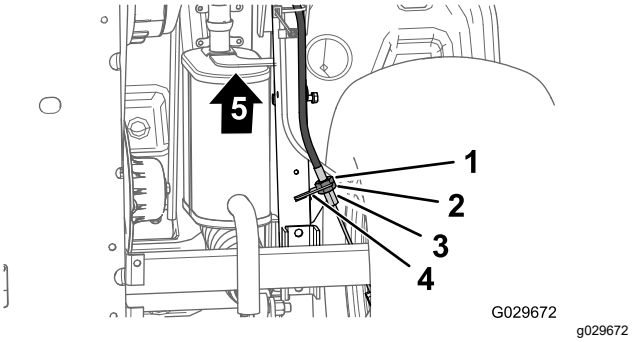

Figure 51

1. Forward jam nut
2. Rear jam nut
3. Brake-cable bracket
4. Threaded adjuster (parking-brake cable)
5. Front of the machine

4. Tighten the forward jam nut (Figure 51).
5. Rotate the brake-adjustment knob (Figure 50) until a force of 133 to 156 N (30 to 35 lbf) is required to engage the parking-brake lever.
   - If you cannot adjust the brake-adjustment knob by **loosening** it and engage the parking-brake lever with a force of 133 to 156 N (30 to 35 lbf), perform the following:
     A. Loosen the forward jam nut (Figure 51) for the threaded adjuster of the parking-brake cable 1 turn.
     B. Tighten the rear jam nut (Figure 51).
     C. Rotate the brake-adjustment knob (Figure 50) until a force of 133 to 156 N (30 to 35 lbf) is required to engage the parking-brake lever.
     D. Repeat steps A through C up to 2 more times to attain the parking brake force between 133 to 156 N (30 to 35 lbf).

- If you cannot adjust the brake-adjustment knob by **tightening** it and engage the parking-brake lever with a a force of 133 to 156 N (30 to 35 lbf), perform the following:

  A. Loosen the rear jam nut (Figure 51) for the threaded adjuster of the parking-brake cable 1 turn.

  B. Tighten the forward jam nut (Figure 51).

  C. Rotate the brake-adjustment knob (Figure 50) until a force of 133 to 156 N (30 to 35 lbf) is required to engage the parking-brake lever.

  D. Repeat steps A through C up to 3 more times to attain the parking brake force between 133 to 156 N (30 to 35 lbf).

  Note: If you cannot adjust the parking-brake cable enough to get the brake-adjustment knob within its adjustment range, check the brake pads for excessive wear.

- Tighten the set screw and install the handgrip (Figure 50).

Checking the Brake-Fluid Level

Service Interval: Before each use or daily—Check the brake-fluid level. Check the brake-fluid level before you first start the engine.

Brake-fluid type: DOT 3

1. Park the machine on a level surface.
2. Engage the parking brake.
3. Shut off the engine and remove the key.
4. Raise the hood to access to the master brake cylinder and reservoir (Figure 52).

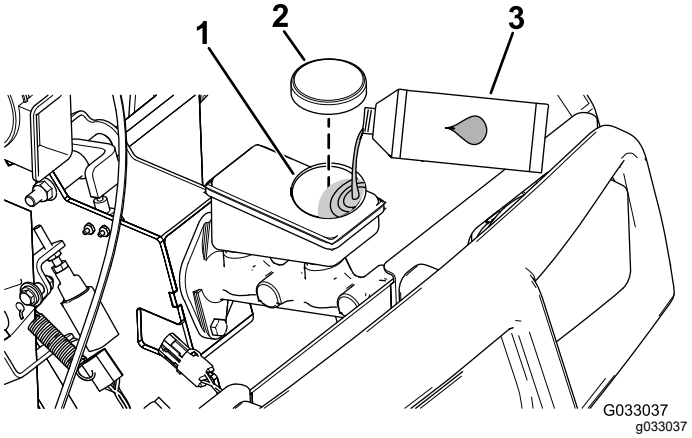

Figure 52

1. Filler neck (reservoir)
2. Reservoir cap
3. DOT 3 brake fluid

5. Look at the outline of the fluid level at the side of the reservoir (Figure 53).

   Note: The level should be above the Minimum line.

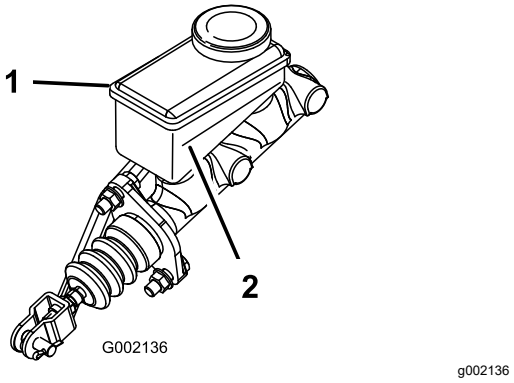

Figure 53

1. Brake-fluid reservoir
2. Minimum line

6. If the fluid level is low, preform the following:

   A. Clean the area around the reservoir cap and remove the cap (Figure 52).

B. Add DOT 3 brake fluid to the reservoir until the fluid level is above the Minimum line (Figure 53).

Note: Do not overfill the reservoir with brake fluid.

C. Install the reservoir cap (Figure 52).

7. Close the hood.

Changing the Brake Fluid

Service Interval: Every 1,000 hours

Contact your authorized Toro distributor.

Belt Maintenance

Servicing the Drive Belt

Checking the Drive Belt

Service Interval: After the first 8 hours
Every 200 hours

1. Park the machine on a level surface, engage the parking brake, shut off the engine, and remove the key.
2. Raise the cargo bed and secure it with the prop rod.
3. Shift the transmission to the NEUTRAL position.
4. Rotate and inspect the belt (Figure 54) for signs of excessive wear or damage.

   Note: Replace the belt if it is excessively worn or damaged; refer to Replacing the Drive Belt (page 46).

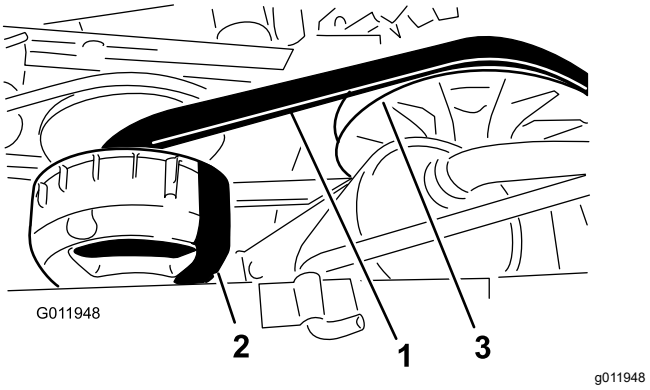

Figure 54

1. Drive belt
2. Primary clutch
3. Secondary clutch

5. Lower the cargo bed.

Replacing the Drive Belt

1. Raise the cargo bed.
2. Shift the transmission into NEUTRAL, engage the parking brake, rotate the key switch to the OFF position, and remove the key.
3. Rotate and route the belt over the secondary clutch (Figure 54).
4. Remove the belt from the primary clutch (Figure 54).

   Note: Discard the old belt.
5. Align the new belt over the primary clutch (Figure 54).
6. Rotate and route the belt over the secondary clutch (Figure 54).

7. Lower the cargo bed.

Checking the Belt-Pull Bumper

Note: Check the belt-pull bumper only when troubleshooting vibration, performing a rebuild, or experiencing an engine-mount failure.

The belt-pull bumper (Figure 55) should maintain a gap of 2.2 mm (0.09 inches).

If the bumper is **too close** to the engine bracket, the belt causes excessive vibration; if the bumper is **too far** from the engine bracket, the belt causes harmful engine stress.

To adjust the gap, loosen the 3 flanged-head bolts securing the bracket to the frame and slide the bracket the appropriate distance.

Once the gap is correct, tighten the 3 flanged-head bolts.

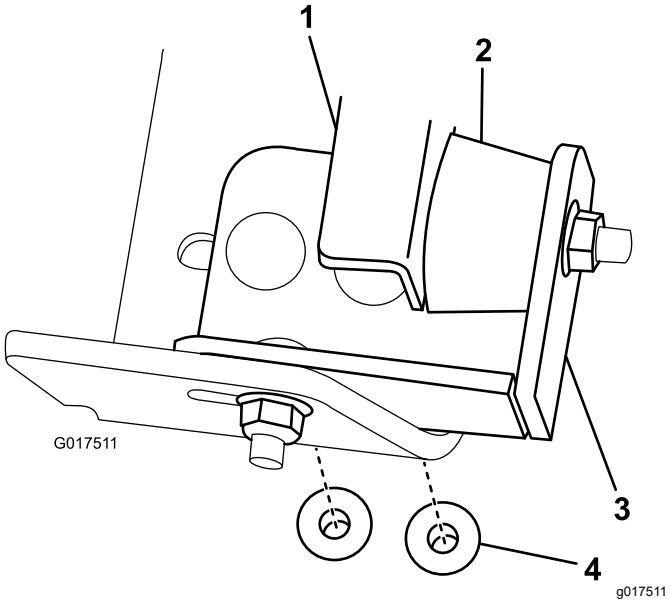

Figure 55

1. Engine bracket
2. Bumper
3. Bracket
4. Flanged-head bolt

Chassis Maintenance

Adjusting the Cargo-Bed Latches

If the cargo-bed latch is out of adjustment, the cargo bed vibrates up and down as you drive the machine. You can adjust the latch posts to make the latches hold the cargo bed snugly to the chassis.

1. Loosen the locknut on the end of the latch post (Figure 56).

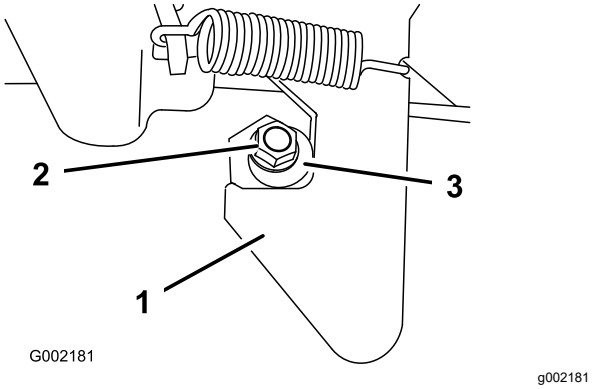

Figure 56

1. Latch
2. Locknut
3. Latch post

2. Rotate the latch post clockwise until it is snug against the hook portion of the latch (Figure 56).
3. Torque the locknut to 19.7 to 25.4 N·m (175 to 225 in-lb).
4. Repeat this steps 1 through 3 for the latch on the other side of the machine.

Cleaning

Washing the Machine

Service Interval: Before each use or daily—Wash the machine.

Wash the machine as needed using water alone or with a mild detergent. You may use a rag when washing the machine.

Important: **Do not use brackish or reclaimed water to clean the machine.**

Important: **Do not use power-washing equipment to wash the machine. Power-washing equipment may damage the electrical system, loosen important decals, or wash away necessary grease at friction points. Avoid excessive use of water near the control panel, engine, and battery.**

Important: **Do not wash the machine with the engine running. Washing the machine with the engine running may result in internal engine damage.**

Storage

Storage Safety

- Shut off the machine, remove the key, and wait for all movement to stop before you leave the operator's position. Allow the machine to cool before adjusting, servicing, cleaning, or storing it.
- Do not store the machine or fuel container where there is an open flame, spark, or pilot light, such as on a water heater or other appliance.

Storing the Machine

Service Interval: Every 200 hours—Inspect the service and parking brakes.

Every 400 hours—Visually inspect the brakes for worn brake shoes.

After the first 50 hours

Every 600 hours/Yearly (whichever comes first)

1. Position the machine on a level surface, engage the parking brake, shut off the engine, and remove the key.
2. Clean dirt and grime from the entire machine, including the outside of the engine.
3. Inspect the brakes; refer to Inspecting the Brakes (page 44).
4. Service the air cleaner; refer to Servicing the Air Filter (page 30).
5. Seal the air-cleaner inlet and the exhaust outlet with weatherproof tape.
6. Change the engine oil; refer to Servicing the Engine Oil (page 31).
7. Flush the fuel tank with fresh, clean fuel.
8. Secure all fuel system fittings.
9. Check the tire pressure; refer to Checking the Tire Pressure (page 15).
10. Check anti-freeze protection and add a 50/50 solution of water and anti freeze as needed for expected minimum temperature in your area.
11. Remove the battery from the machine and fully charge the battery; refer to Removing the Battery (page 34).

    Note: Do not connect the battery cables to the battery posts during storage.

    Important: **The battery must be fully charged to prevent it from freezing and being damaged at temperatures below 0°C (32°F).**

    A fully charged battery maintains its charge for about 50 days at temperatures lower than 4°C (40°F). If the temperatures will be below 4°C (40°F), charge it every 30 days.
12. Check and tighten all bolts, nuts, and screws. Repair or replace any part that is damaged.
13. Paint all scratched or bare metal surfaces.

    Note: Paint is available from your Authorized Service Dealer.
14. Store the machine in a clean, dry garage or storage area.
15. Cover the machine to protect it and keep it clean.

EEA/UK Privacy Notice

Toro's Use of Your Personal Information

The Toro Company ("Toro") respects your privacy. When you purchase our products, we may collect certain personal information about you, either directly from you or through your local Toro company or dealer. Toro uses this information to fulfil contractual obligations - such as to register your warranty, process your warranty claim or to contact you in the event of a product recall - and for legitimate business purposes - such as to gauge customer satisfaction, improve our products or provide you with product information which may be of interest. Toro may share your information with our subsidiaries, affiliates, dealers or other business partners in connection these activities. We may also disclose personal information when required by law or in connection with the sale, purchase or merger of a business. We will never sell your personal information to any other company for marketing purposes.

Retention of your Personal Information

Toro will keep your personal information as long as it is relevant for the above purposes and in accordance with legal requirements. For more information about applicable retention periods please contact legal@toro.com.

Toro's Commitment to Security

Your personal information may be processed in the US or another country which may have less strict data protection laws than your country of residence. Whenever we transfer your information outside of your country of residence, we will take legally required steps to ensure that appropriate safeguards are in place to protect your information and to make sure it is treated securely.

Access and Correction

You may have the right to correct or review your personal data, or object to or restrict the processing of your data. To do so, please contact us by email at legal@toro.com. If you have concerns about the way in which Toro has handled your information, we encourage you to raise this directly with us. Please note that European residents have the right to complain to your Data Protection Authority.

California Proposition 65 Warning Information

What is this warning?

You may see a product for sale that has a warning label like the following:

WARNING: Cancer and Reproductive Harm—www.p65Warnings.ca.gov.

What is Prop 65?

Prop 65 applies to any company operating in California, selling products in California, or manufacturing products that may be sold in or brought into California. It mandates that the Governor of California maintain and publish a list of chemicals known to cause cancer, birth defects, and/or other reproductive harm. The list, which is updated annually, includes hundreds of chemicals found in many everyday items. The purpose of Prop 65 is to inform the public about exposure to these chemicals.

Prop 65 does not ban the sale of products containing these chemicals but instead requires warnings on any product, product packaging, or literature with the product. Moreover, a Prop 65 warning does not mean that a product is in violation of any product safety standards or requirements. In fact, the California government has clarified that a Prop 65 warning "is not the same as a regulatory decision that a product is 'safe' or 'unsafe.'" Many of these chemicals have been used in everyday products for years without documented harm. For more information, go to https://oag.ca.gov/prop65/faqs-view-all.

A Prop 65 warning means that a company has either (1) evaluated the exposure and has concluded that it exceeds the "no significant risk level"; or (2) has chosen to provide a warning based on its understanding about the presence of a listed chemical without attempting to evaluate the exposure.

Does this law apply everywhere?

Prop 65 warnings are required under California law only. These warnings are seen throughout California in a wide range of settings, including but not limited to restaurants, grocery stores, hotels, schools, and hospitals, and on a wide variety of products. Additionally, some online and mail order retailers provide Prop 65 warnings on their websites or in catalogs.

How do the California warnings compare to federal limits?

Prop 65 standards are often more stringent than federal and international standards. There are various substances that require a Prop 65 warning at levels that are far lower than federal action limits. For example, the Prop 65 standard for warnings for lead is 0.5 µg/day, which is well below the federal and international standards.

Why don't all similar products carry the warning?

- Products sold in California require Prop 65 labelling while similar products sold elsewhere do not.
- A company involved in a Prop 65 lawsuit reaching a settlement may be required to use Prop 65 warnings for its products, but other companies making similar products may have no such requirement.
- The enforcement of Prop 65 is inconsistent.
- Companies may elect not to provide warnings because they conclude that they are not required to do so under Prop 65; a lack of warnings for a product does not mean that the product is free of listed chemicals at similar levels.

Why does Toro include this warning?

Toro has chosen to provide consumers with as much information as possible so that they can make informed decisions about the products they buy and use. Toro provides warnings in certain cases based on its knowledge of the presence of one or more listed chemicals without evaluating the level of exposure, as not all the listed chemicals provide exposure limit requirements. While the exposure from Toro products may be negligible or well within the "no significant risk" range, out of an abundance of caution, Toro has elected to provide the Prop 65 warnings. Moreover, if Toro does not provide these warnings, it could be sued by the State of California or by private parties seeking to enforce Prop 65 and subject to substantial penalties.

The Toro Warranty

Two-Year or 1,500 Hours Limited Warranty

Conditions and Products Covered

The Toro Company warrants your Toro Commercial product ("Product") to be free from defects in materials or workmanship for 2 years or 1,500 operational hours*, whichever occurs first. This warranty is applicable to all products with the exception of Aerators (refer to separate warranty statements for these products). Where a warrantable condition exists, we will repair the Product at no cost to you including diagnostics, labor, parts, and transportation. This warranty begins on the date the Product is delivered to the original retail purchaser.
* Product equipped with an hour meter.

Instructions for Obtaining Warranty Service

You are responsible for notifying the Commercial Products Distributor or Authorized Commercial Products Dealer from whom you purchased the Product as soon as you believe a warrantable condition exists. If you need help locating a Commercial Products Distributor or Authorized Dealer, or if you have questions regarding your warranty rights or responsibilities, you may contact us at:

Toro Commercial Products Service Department
8111 Lyndale Avenue South
Bloomington, MN 55420-1196

952–888–8801 or 800–952–2740
E-mail: commercial.warranty@toro.com

Owner Responsibilities

As the product owner, you are responsible for required maintenance and adjustments stated in your *Operator's Manual*. Repairs for product issues caused by failure to perform required maintenance and adjustments are not covered under this warranty.

Items and Conditions Not Covered

Not all product failures or malfunctions that occur during the warranty period are defects in materials or workmanship. This warranty does not cover the following:

- Product failures which result from the use of non-Toro replacement parts, or from installation and use of add-on, or modified non-Toro branded accessories and products.
- Product failures which result from failure to perform recommended maintenance and/or adjustments.
- Product failures which result from operating the Product in an abusive, negligent, or reckless manner.
- Parts consumed through use that are not defective. Examples of parts which are consumed, or used up, during normal Product operation include, but are not limited to, brake pads and linings, clutch linings, blades, reels, rollers and bearings (sealed or greasable), bed knives, spark plugs, castor wheels and bearings, tires, filters, belts, and certain sprayer components such as diaphragms, nozzles, flow meters, and check valves.
- Failures caused by outside influence, including, but not limited to, weather, storage practices, contamination, use of unapproved fuels, coolants, lubricants, additives, fertilizers, water, or chemicals.
- Failure or performance issues due to the use of fuels (e.g. gasoline, diesel, or biodiesel) that do not conform to their respective industry standards.
- Normal noise, vibration, wear and tear, and deterioration. Normal "wear and tear" includes, but is not limited to, damage to seats due to wear or abrasion, worn painted surfaces, scratched decals or windows.

Parts

Parts scheduled for replacement as required maintenance are warranted for the period of time up to the scheduled replacement time for that part. Parts replaced under this warranty are covered for the duration of the original product warranty and become the property of Toro. Toro will make the final decision whether to repair any existing part or assembly or replace it. Toro may use remanufactured parts for warranty repairs.

Deep Cycle and Lithium-Ion Battery Warranty

Deep cycle and Lithium-Ion batteries have a specified total number of kilowatt-hours they can deliver during their lifetime. Operating, recharging, and maintenance techniques can extend or reduce total battery life. As the batteries in this product are consumed, the amount of useful work between charging intervals will slowly decrease until the battery is completely worn out. Replacement of worn out batteries, due to normal consumption, is the responsibility of the product owner. Note: (Lithium-Ion battery only): Refer to the battery warranty for additional information.

Lifetime Crankshaft Warranty (ProStripe 02657 Model Only)

The Prostripe which is fitted with a genuine Toro Friction Disc and Crank-Safe Blade Brake Clutch (integrated Blade Brake Clutch (BBC) + Friction Disc assembly) as original equipment and used by the original purchaser in accordance with recommended operating and maintenance procedures, are covered by a Lifetime Warranty against engine crankshaft bending. Machines fitted with friction washers, Blade Brake Clutch (BBC) units and other such devices are not covered by the Lifetime Crankshaft Warranty.

Maintenance is at Owner's Expense

Engine tune-up, lubrication, cleaning and polishing, replacement of filters, coolant, and completing recommended maintenance are some of the normal services Toro products require that are at the owner's expense.

General Conditions

Repair by an Authorized Toro Distributor or Dealer is your sole remedy under this warranty.

The Toro Company is not liable for indirect, incidental or consequential damages in connection with the use of the Toro Products covered by this warranty, including any cost or expense of providing substitute equipment or service during reasonable periods of malfunction or non-use pending completion of repairs under this warranty. Except for the Emissions warranty referenced below, if applicable, there is no other express warranty. All implied warranties of merchantability and fitness for use are limited to the duration of this express warranty.

Some states do not allow exclusions of incidental or consequential damages, or limitations on how long an implied warranty lasts, so the above exclusions and limitations may not apply to you. This warranty gives you specific legal rights, and you may also have other rights which vary from state to state.

Note Regarding Emissions Warranty

The Emissions Control System on your Product may be covered by a separate warranty meeting requirements established by the U.S. Environmental Protection Agency (EPA) and/or the California Air Resources Board (CARB). The hour limitations set forth above do not apply to the Emissions Control System Warranty. Refer to the Engine Emission Control Warranty Statement supplied with your product or contained in the engine manufacturer's documentation.

Countries Other than the United States or Canada

Customers who have purchased Toro products exported from the United States or Canada should contact their Toro Distributor (Dealer) to obtain guarantee policies for your country, province, or state. If for any reason you are dissatisfied with your Distributor's service or have difficulty obtaining guarantee information, contact your Authorized Toro Service Center.