FORM NO. 3325-160 Rev B

TORO®

MODEL NO. 03550—200000001 & UP
MODEL NO. 03551—200000001 & UP

OPERATOR'S MANUAL

REELMASTER® 5500-D

To understand this product, and for safety and optimum performance, read this manual before starting the engine. Pay special attention to SAFETY INSTRUCTIONS highlighted by this symbol.



It means CAUTION, WARNING or DANGER—personal safety instruction. Failure to comply with the instruction may result in personal injury.



©The TORO COMPANY—2000

This operator's manual has instructions on safety, operation, and maintenance.

This manual emphasizes safety, mechanical and general product information. DANGER, WARNING and CAUTION identify safety messages. Whenever the triangular safety alert symbol appears, understand the safety message that follows. "IMPORTANT" highlights special mechanical information and "NOTE" emphasizes general product information worthy of special attention.

Table of Contents

Table of Contents 2
Safety 3
Symbol Glossary 6
Specifications 9

Before Operating 11
- Check the Engine Oil 11
- Check the Cooling System 11
- Fill the Fuel Tank 11
- Check the Transmission Fluid 12
- Check the Hydraulic Fluid 12
- Check Rear Axle Lubricant (Model 03551 only) 14
- Check Reel-To-Bedknife Contact 14
- Check Wheel Nut Torque 14

Controls 15

Operation 17
- Starting and Stopping 17
- Bleeding the Fuel System 17
- Setting Reel Speed 18
- Adjusting Rear Lift Arm Counterbalance 19
- Towing the Traction Unit 19
- Diagnostic Light 20
- Diagnostic ACE Display 20
- Checking Interlock Switches 21
- Hydraulic Valve Solenoid Functions 23
- Operating Characteristics 23
- Minimum Recommended Maintenance Intervals 24

Maintenance 24
- Fluid Specifications/Change Intervals 25
- Service Interval Charts 25
- Greasing Bearings and Bushings 26
- General Air Cleaner Maintenance 28
- Servicing the Air Cleaner Bowl 28
- Servicing the Air Cleaner 28
- Engine Oil and Filter 29
- Fuel System 29
- Replacing the Fuel Filter 30
- Bleeding Air from the Injectors 30
- Engine Cooling System 31
- Servicing the Engine Belts 31
- Adjusting the Throttle 32
- Changing Hydraulic Fluid 32
- Replacing the Hydraulic Filter 33
- Checking Hydraulic Lines and Hoses 33
- Hydraulic System Test Ports 34
- Adjusting the Traction Drive for Neutra 34
- Adjusting Cutting Unit Lift Rate 34
- Checking and Adjusting Traction Linkage 35
- Adjusting Service Brakes 36
- Changing Transmission Fluid 36
- Replacing the Transmission Filter 37
- Changing Rear Axle Lubricant (Model 03551 only) 37
- Rear Wheel Toe-In 37
- Battery Care 38
- Fuses 38
- Cutting Unit Maintenance 39
- Preparation for Seasonal Storage 41

Identification and Ordering 42

Safety

Training

1. Read the instructions carefully. Be familiar with the controls and the proper use of the equipment.

2. Never allow children or people unfamiliar with these instructions to use the lawn mower. Local regulations may restrict the age of the operator.

3. Never mow while people, especially children, or pets are nearby.

4. Keep in mind that the operator or user is responsible for accidents or hazards occurring to other people or their property.

5. Do not carry passengers.

6. All drivers should seek and obtain professional and practical instruction. Such instruction should emphasize:

    - the need for care and concentration when working with ride-on machines;
    - control of a ride-on machine sliding on a slope will not be regained by the application of the brake. The main reasons for loss of control are:
        - insufficient wheel grip;
        - being driven too fast;
        - inadequate braking;
        - the type of machine is unsuitable for its task;
        - lack of awareness of the effects of ground conditions, especially slopes;
        - incorrect hitching and load distribution.

Preparation

1. While mowing, always wear substantial footwear and long trousers. Do not operate the equipment when barefoot or wearing open sandals.

2. Thoroughly inspect the area where the equipment is to be used and remove all objects which may be thrown by the machine.

3. **WARNING—Petrol is highly flammable.**

    - Store fuel in containers specifically designed for this purpose.
    - Refuel outdoors only and do not smoke while refueling.
    - Add fuel before starting the engine. Never remove the cap of the fuel tank or add petrol while the engine is running or when the engine is hot.
    - If petrol is spilled, do not attempt to start the engine but move the machine away from the are of spillage and avoid creating any source of ignition until petrol vapors have dissipated.
    - Replace all fuel tanks and container caps securely.

4. Replace faulty silencers.

Operation

1. Do not operate the engine in a confined space where dangerous carbon monoxide fumes can collect.

2. Mow only in daylight or in good artificial light.

3. Before attempting to start the engine, disengage all blade attachment clutches and shift into neutral.

4. Do not use on slopes of more than:

    - Never mow side hills over 5°
    - Never mow uphill over 10°
    - Never mow downhill over 15°

5. Remember there is no such thing as a “safe” slope. Travel on grass slopes requires particular care. To guard against overturning:

    - do not stop or start suddenly when going up or downhill;

- engage the clutch slowly, and always keep the machine in gear, especially when travailing downhill;
- machine speeds should be kept low on slopes and during tight turns;
- stay alert for bumps and hollows and other hidden hazards;
- never mow across the face of the slope, unless the lawn mower is designed for this purpose.

6. Use care when pulling loads or using heavy equipment.

- Use only approved drawbar hitch points.
- Limit loads to those you can safely control.
- Do not turn sharply. Use care when reversing.
- Use counterweight(s) or wheel weights when suggested in the instruction handbook.

7. Watch out for traffic when crossing or near roadways.

8. Stop the blades rotating before crossing surfaces other than grass.

9. When using any attachments, never direct discharge of material toward bystanders nor allow anyone near the machine while in operation .

10. Never operate the lawn mower with defective guards, shields or without safety protective devices in place.

11. Do not change the engine governor settings or overspeed the engine. Operating the engine at excessive speeds may increase the hazard of personal injury.

12. Before leaving the operator's position:

- disengage the power take-off and lower the attachments;
- change into neutral and set the parking brake;
- stop the engine and remove the key.

13. Disengage the drive to attachments when transporting or not in use.

14. Stop the engine and disengage the drive to the attachment

- before refueling;
- before removing the grass catcher;
- before making height adjustments unless the adjustment can be made from the operator's position.
- before clearing blockages;
- before checking, cleaning or working on the lawnmower;
- after striking a foreign object. Inspect the lawnmower for damage and make repairs before restarting and operating the equipment.

15. Reduce the throttle setting during engine run-out and, if the engine is provided with a shutoff valve, turn the fuel off at the conclusion of mowing.

Maintenance and Storage

1. Keep all nuts, bolts and screws tight to be sure the equipment is in safe working condition.

2. Never store the equipment with petrol in the tank inside a building where fumes may reach an open flame or spark.

3. Allow the engine to cool before storing in any enclosure.

4. To reduce the fire hazard, keep the engine, silencer, battery compartment and petrol storage area free of grass, leaves, or excessive grease.

5. Check the grass catcher frequently for wear or deterioration.

6. Replace worn or damaged parts for safety.

7. If the fuel tank has to be drained, this should be

done outdoors.

8. Be careful during adjustment of the machine to prevent entrapment of the fingers between moving blades and fixed parts of the machine.

9. On multi-bladed machines, take care as rotating one blade can cause other blades to rotate.

10. When the machine is to be parked, stored or left unattended, lower the cutting means unless a positive mechanical lock is used.

Sound & Vibration Levels

SOUND PRESSURE LEVEL

This unit has an equivalent continuous A-weighted sound pressure at the operator ear of: 88 dB(A), based on measurements of identical machines per Directive 84/538/EEC and amendments.

SOUND POWER LEVEL

This unit has a sound power level of: 102 dB(A)/l pW, based on measurements of identical machines per Directive 84/538/EEC and amendments.

VIBRATION LEVEL

Hand-Arm

This unit does not exceed a vibration level of 2.5 m/s^2 at the hands based on measurements of identical machines per ISO 5349 procedures.

Whole Body

This unit does not exceed a vibration level of 0.5 m/s^2 at the posterior based on measurements of identical machines per ISO 2631 procedures.

Symbol Glossary

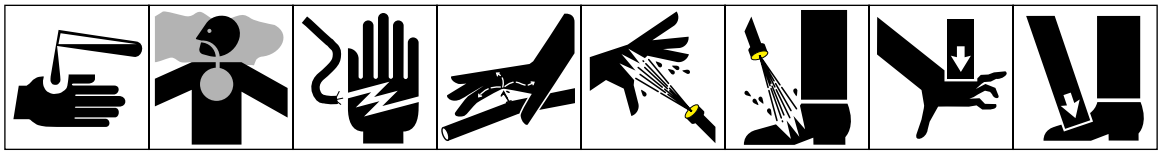

Caustic liquids, chemical burns to fingers or hand | Poisonous fumes or toxic gases, asphyxiation | Electrical shock, electrocution | High pressure fluid, injection into body | High pressure spray, erosion of flesh | High pressure spray, erosion of flesh | Crushing of fingers or hand, force applied from above | Crushing of toes or foot, force applied from above

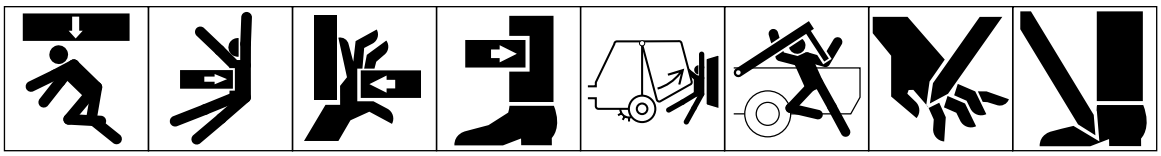

Crushing of whole body, applied from above | Crushing of torso, force applied from side | Crushing of fingers or hand/, force applied from side | Crushing of leg, force applied from side | Crushing of whole body | Crushing of head, torso and arms | Cutting of fingers or hand | Cutting of foot

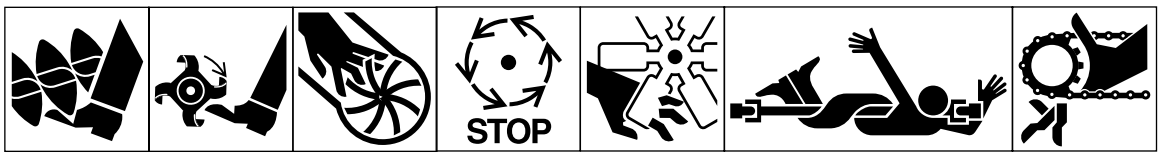

Cutting or entanglement of foot, rotating auger | Severing of foot, rotating knives | Severing of fingers or hand, impeller blade | Wait until all machine components have completely stopped before touching them | Severing of fingers or hand, engine fan | Whole body entanglement, implement input drive line | Fingers or hand entanglement, chain drive

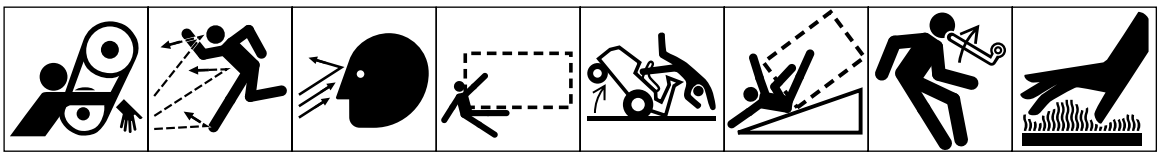

Hand & arm entanglement, belt drive | Thrown or flying objects, whole body exposure | Thrown or flying objects, face exposure | Runover/backover, (relevant machine to appear in dashed box) | Machine tipping, riding mower | Machine rollover, ROPS (relevant machine to appear in dashed box) | Stored energy hazard, kickback or upward motion | Hot surfaces, burns to fingers or hands

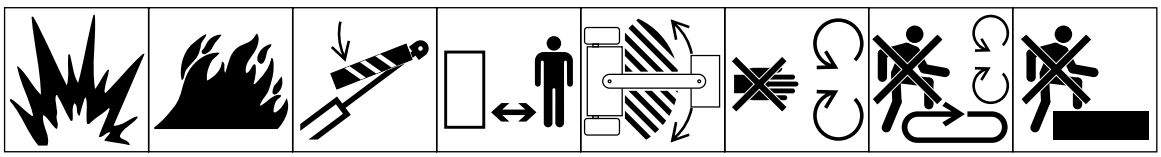

Explosion | Fire or open flame | Secure lifting cylinder with locking device before getting in hazardous area | Stay a safe distance from the machine | Stay clear of articulation area while engine is running | Do not open or remove safety shields while engine is running | Do not step on loading platform if PTO is connected to tractor & engine is running | Do not step

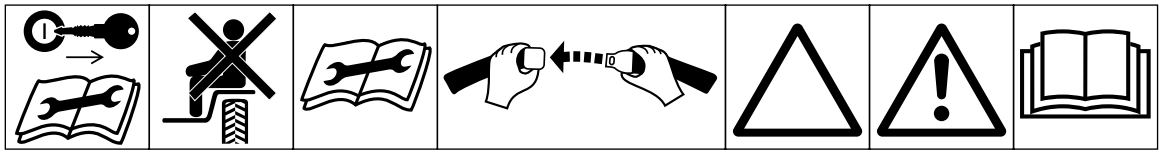

Shut off engine & remove key before performing maintenance or repair work | Riding on this machine is allowed only on a passenger seat & only if the driver's view is not hindered | Consult technical manual for proper service procedures | Fasten seat belts | Safety alert triangle | outline safety alert symbol | Read operator's manual

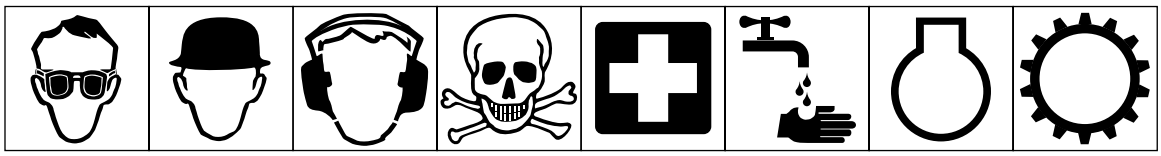

Eye protection must be worn | Head protection must be worn | Hearing protection must be worn | Caution, toxic risk | First aid | Flush with water | Engine | Transmission

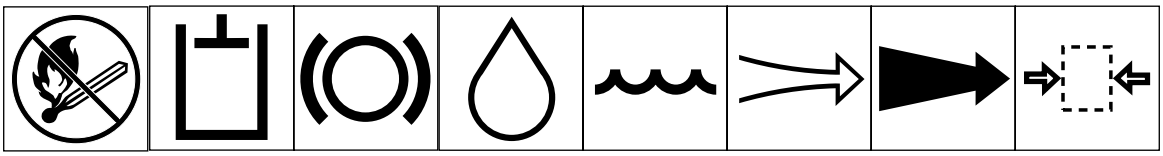

Fire, open light & smoking prohibited | Hydraulic system | Brake system | Oil | Coolant (water) | Intake air | Exhaust gas | Pressure

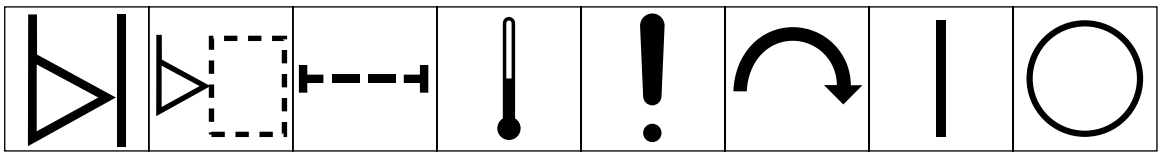

Level indicator | Liquid level | Filter | Temperature | Failure/ Malfunction | Start switch/ mechanism | On/start | Off/stop

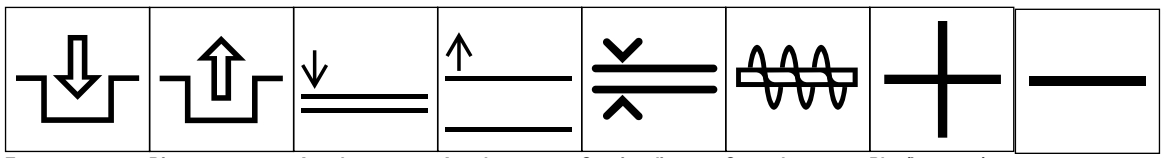

Engage | Disengage | Attachment lower | Attachment raise | Spacing distance | Snow thrower, collector auger | Plus/increase/ positive polarity | Minus/decrease/ negative polarity

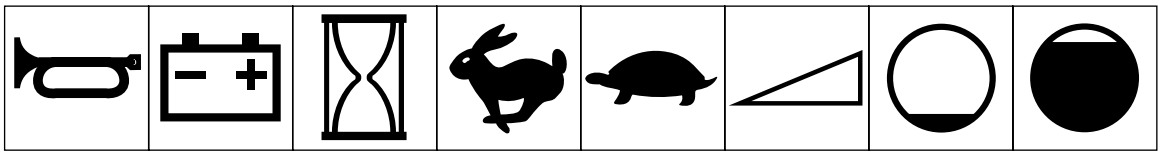

Horn | Battery charging condition | Hourmeter/elapsed operating hours | Fast | Slow | Continuous variable, linear | Volume empty | Volume full

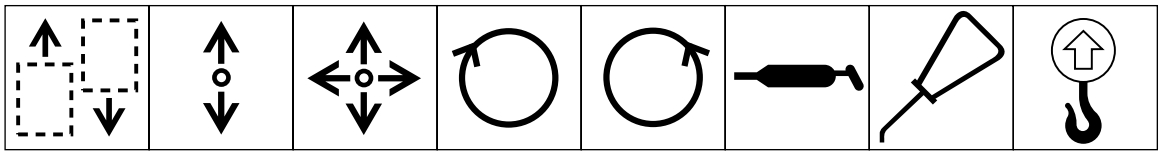

Machine travel direction, forward/rearward | Control lever operating direction, dual direction | Control lever operating direction, multiple direction | Clockwise rotation | Counter-clock-wise rotation | Grease lubrication point | Oil lubrication point | Lift point

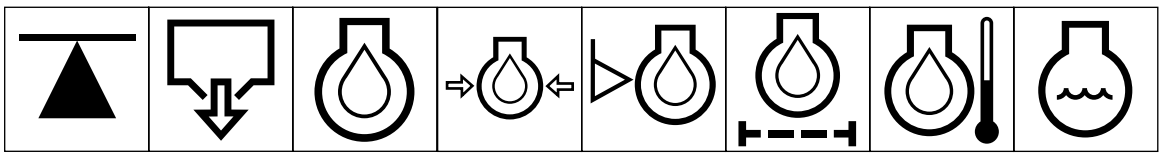

Jack or support point | Draining/ emptying | Engine lubricat-ing oil | Engine lubricating oil pressure | Engine lubricating oil level | Engine lubricating oil filter | Engine lubricating oil temperature | Engine coolant

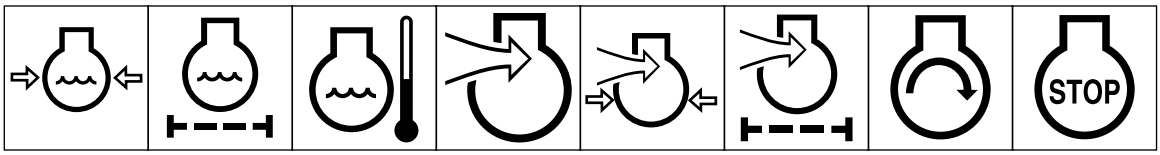

Engine coolant pressure | Engine coolant f ilter | Engine lubricating oil pressure | Engine intake/ combustion air | Engine intake/ combustion air pressure | Engine intake/ air filter | Engine start | Engine stop

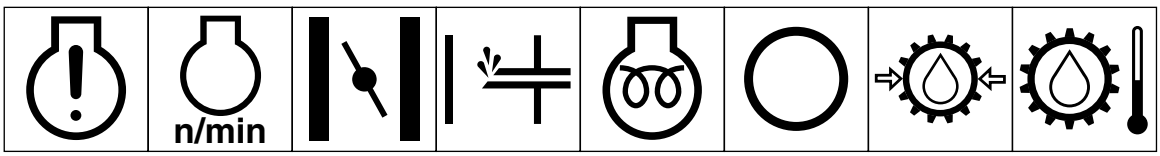

Engine failure/ malfunction | Engine rotational speed/frequency | Choke | Primer (start aid) | Electrical preheat (low temperature start aid) | Transmission oil | Transmission oil pressure | Transmission oil temperature

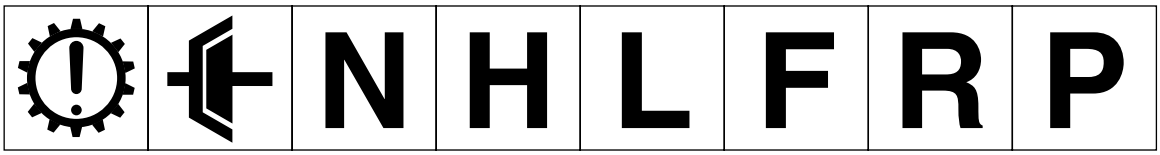

Transmission failure/malfunction | Clutch | Neutral | High | Low | Forward | Reverse | Park

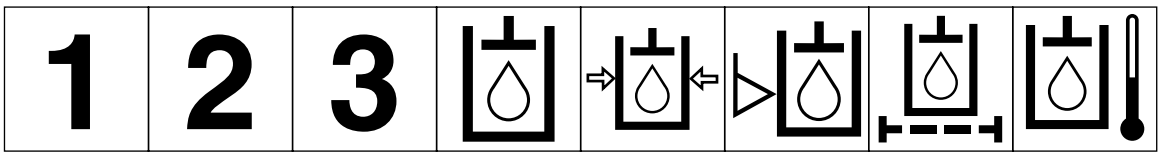

First gear | Second gear | Third gear (other #'s may be used until the maximum # of for- ward gears is reached.) | Hydraulic oil | Hydraulic oil pressure | Hydraulic oil level | Hydraulic oil filter | Hydraulic oil temperature

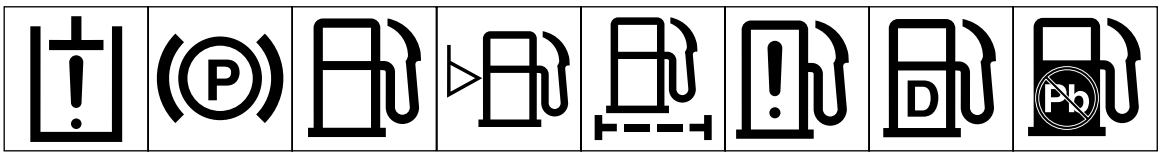

Hydraulic oil failure/malfunction | Parking brake | Fuel | Fuel level | Fuel filter | Fuel system failure/malfunction | Diesel fuel | Unleaded fuel

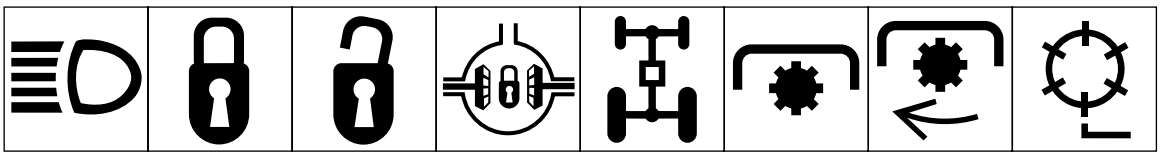

Headlights | Lock | Unlock | Differential lock | 4-Wheel drive | Power Take-Off | Power Take-Off, rotational speed | Reel cutting element

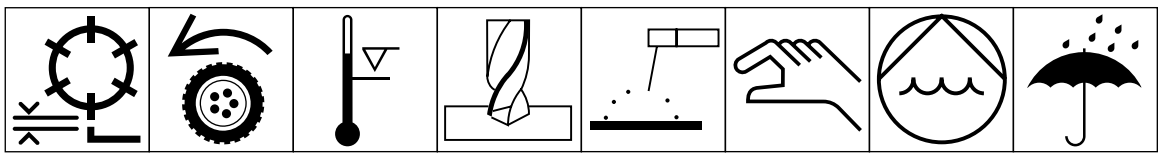

Reel cutting element, height adjustment | Traction | Above working temperature range | Drilling | Manual metal arc welding | Manual | 0356 Water pump | 0626 Keep dry

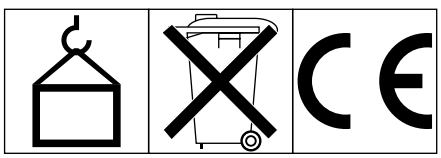

0430 weight | Do not dispose in the garbage | CE logo

Specifications

Engine: Kubota three-cylinder, 4-cycle, liquid-cooled diesel. 26kW (35 hp) @ governed to 3200 rpm; 1123 cc displacement. Heavy-duty, 3-stage, remote-mounted air cleaner. High water temperature shutdown switch.

Main Frame: All welded formed steel frame, includes three tie-down loops

Cooling System: Radiator capacity is 7.1 l of 50/50 mixture of ethylene glycol anti-freeze. Remote mounted 0.95L expansion tank. Removable oil cooler/radiator intake screen. Air-to-oil cooler, mounted to front of radiator, tips forward for cleaning

Fuel System: Fuel tank capacity is 37.9 l (10 gal.) of #2 diesel fuel. Equipped with a fuel filter/water separator to capture water in the fuel.

Traction System: Foot pedal controls forward/reverse ground speed. Ground speed: 0–16.1 kmh (0–10 m.p.h.) forward and 0–6.4 kmh (0-4 mph) reverse. Hydrostatic transmission mounted directly on a 20.9:1 ratio front axle. Axle/reservoir capacity is 4.7 l (5 qts). Replaceable filter mounted directly on transmission housing. Model 03551—Mechanical rear axle is coupled to the front axle by a drive shaft and overrunning clutch.

Cutting Unit Drive System: Hydraulic reel motors feature quick disconnects to ease removal/installation on cutting units. Hydraulic fluid reservoir capacity is 32.2 l (8.5 gal.). System protected by a filter assembly with service indicator.

Seat: Deluxe high back seat with adjustable fore and aft travel, weight and height. Tool box at the left side of the seat.

Steering System: Power steering with dedicated power source.

Tires: Two rear tires: 20 x 10-8, tubeless, 6-ply rating. Two front tires: 26 x 12.00-12 tubeless, 4-ply rating. Recommended tire pressure for the front and rear tires is 69–103 kPa (10–15 psi).

Brakes: Individual drum-type wheel brakes on the front traction wheels. Brakes are controlled by individual pedals operated by the left foot. Hydrostatic braking through the traction drive.

Electrical System: Automotive-type electrical system. 12-volt, maintenance-free battery with 530 cold cranking Amps @ –17° C and 85 minute reserve capacity @ 29° C. 40-amp alternator with I.C. regulator/rectifier. Seat switch, reel and traction interlock switches. An electronic controller monitors and controls safety and operational functions. Parking brake switch and individual circuit backlap switches.

Controls: Foot-operated traction and brake pedals. Hand-operated throttle, traction speed control lever, parking brake lock, ignition switch with automatic preheat cycle, single joy stick control for cutting unit on/off and lift/lower. Cutting unit backlap switch and reel speed controls located under the operator seat.

Gauges: Hour meter, speedometer, fuel gauge, temperature gauge. 4 warning lamps: oil pressure, water temperature, amps and glow plug.

Diagnostics: The Automatic Control Electronics 7 ACE™ system allows precise timing and control of machine functions for maximum reliability. Optional hand-held diagnostic display connects to an electronic control unit to pin point any electrical problems quickly and easily. Available DATA LOG™ system allows mechanic to find intermittent problems.

General Specifications (approx.):

Width-of-Cut :	254 cm (100 in.)
Overall Width:	
Transport	222.5 cm (88 in.)
Outside of front tires	221 cm (87 in.)
Outside of rear tires	133.3 cm (52.5)
Overall Length:	
Without grass baskets:	287 cm (113 in.)
With grass baskets:	305 cm (120 in.)
Height:	
With Rollover protector:	208 cm (82 in.)
Without	150 cm (59 in.)

Recommended Height-of-Cut:
5-Blade Cutting Unit: 2.54–4.5cm (1.00–1.75 in.)
7-Blade Cutting Unit: 1.27–2.54 cm (0.5–1.0 in.)
11-Blade Cutting Unit 0.95–1.9 cm (0.375–0.75 in.)

Weight:
Model 03550 1,105 kg (2,962 lbs.)*
Model 03551 1,198 kg (3,210 lbs.)*
**With 7-Blade Cutting Units, baskets & full fluid levels*

Optional Equipment:

5-Blade Cutting Unit (7 in.)	Model No. 03860
7-Blade Cutting Unit (7 in.)	Model No. 03861
11-Blade Cutting Unit (7 in.)	Model No. 03862
Dethatching Cutting Unit	Model No. 03871
Grass Basket Kit	Model No. 03882
Armrest Kit	Model No. 30707
4 -Wheel Drive Kit (For use with model 03550 only)	Model No. 03538
Turf Defender™ Electronic Leak Detector Kit	Model No. 03521
Precleaner Bowl Extension Tube (Clamp, Part No. 20-4840 required to install extension tube)	Part No. 43-3810
Diagnostic ACE Too]	Part No. 85-4750
Weight Kit	Part No. 94-2836
High Torque Reel Motor	Part No. 98-9998
Wiehle Roller Scraper	Part No. 100-9908
Basket Tipper Kit	Part No. 100-9945
Rear Roller Scraper Kit	Part No. 100-9920
Full Roller Scraper Kit	Part No. 99-8668
Shoulder Wiehle Roller	Part No. 100-9911
Shoulder Wiehle Scraper	Part No. 100-9913
Low Height-of-Cut Bedknife*	Part No. 93-9774
Gauge Bar Assembly**	Part No. 98-1852
Angle Indicator	Part No. 99-3503
Backlapping Brush Assembly	Part No. TOR2991 00
Bedknife Screw Tool	Part No. TOR510880
Cutting Unit Tool Kit	Part No. TOR4070
Reel Drive Tool	Part No. TOR4074

* For height-of-cut below 13 mm kit
**Supplied with tractor

Specifications and design subject to change without notice.

Before Operating

Check the Engine Oil

1. Park the machine on a level surface, stop the engine and remove the key from the ignition switch. Open the hood.

2. Remove the dipstick, wipe it clean, then reinstall it. Remove it again and check the oil level on the dipstick; The oil level should be up to the FULL mark.

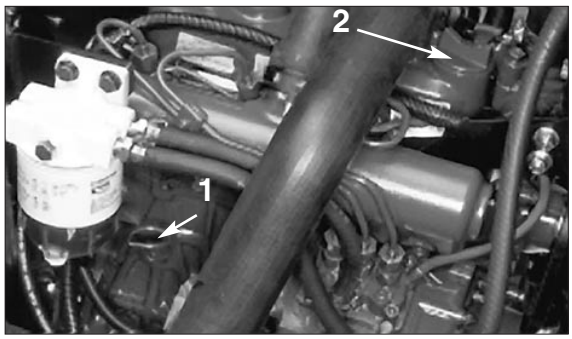

Figure 1

1. Dipstick
2. Oil fill cap

3. If the oil is below the FULL mark, remove the fill cap and add SAE 10W-30 CD, CE, CF-4, or CG-4 classification oil until the level reaches the FULL mark on the dipstick. DO NOT OVERFILL. Crankcase capacity is 3.8 l with filter.

4. Install the oil fill cap and close the hood.

Check the Cooling System

Clean debris from the screen, oil cooler and the front of the radiator daily, more often if conditions are extremely dusty and dirty.

The cooling system is filled with a 50/50 solution of water and permanent ethylene glycol anti-freeze. Check the level of coolant in the expansion tank each day before starting the engine. Cooling system capacity is 9.1 l.

CAUTION

If the engine has been running, pressurized hot coolant can escape when the radiator cap is removed and cause burns.



Figure 2

1. Expansion Tank

1. Check the level of coolant in the expansion tank. It should be between the marks on the side of the tank.

2. If coolant level is low, remove the expansion tank cap and replenish the system. DO NOT OVERFILL.

3. Install the expansion tank cap.

Fill the Fuel Tank

1. Remove the fuel tank cap.

2. Fill the tank to about 2.5 cm (one inch) below the top of the tank, not the filler neck, with No. 2 diesel fuel. Then install the cap.

DANGER

Because diesel fuel is flammable, use caution when storing or handling it. Do not smoke while filling the fuel tank. Do not fill the fuel tank while the engine is running, hot, or when the machine is in an enclosed area. Always fill the fuel tank outside and wipe up any spilled diesel fuel before starting the engine. Store the fuel in a clean, safety-approved container and keep the cap in place. Use Diesel fuel for the engine only; not for any other purpose.

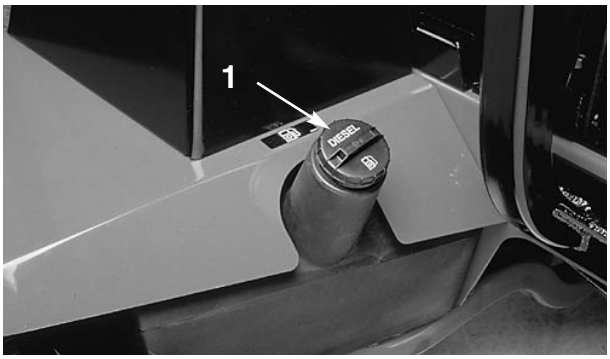

Figure 3

1. Fuel tank cap

Check the Transmission Fluid

The front axle housing acts as the reservoir for the system. The transmission and axle housing are shipped from the factory with 4.7 l (5 quarts) of Mobil 424 hydraulic fluid. However, check the level of transmission oil before first starting the engine and daily thereafter.

1. Position the machine on a level surface, lower the cutting units and stop the engine.

2. Remove the access panel behind the foot rest.

3. Unscrew the dipstick cap from the transmission filler neck and wipe it with a clean cloth. Screw the dipstick into the filler neck. Remove the dipstick and check the oil level. If the level is not within 1.2 cm (1/2 inch) from the groove in the dipstick, add enough oil to raise it to the groove mark. DO NOT OVERFILL by more than .6 cm (1/4 inch) above the groove.

3. Screw the dipstick filler cap finger-tight onto the filler neck. It is not necessary to tighten the cap with a wrench.

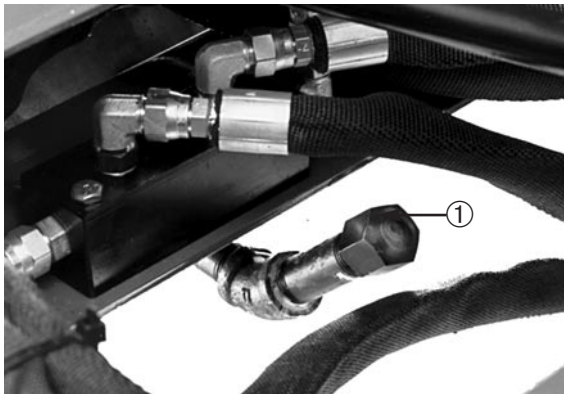

Figure 4

1. Transmission dipstick cap

Check the Hydraulic Fluid

The hydraulic system driving the reels is designed to operate on anti-wear hydraulic fluid. The machine's reservoir is filled at the factory with 32.2 l (8.5 gallons) of Mobil 424 hydraulic fluid. **Check the level of hydraulic fluid before the first starting the engine and daily thereafter.**

Note: A red dye additive for the hydraulic system oil is available in 20 ml bottles. One bottle is sufficient for 15–22 l of hydraulic oil. Order Part No. 44-2500 from your authorized Toro distributor.



Figure 5

1. Hydraulic tank cap

Group 1 Hydraulic Oil (Recommended for ambient temperatures consistently below 38° C (100° F):

ISO type 46/68 anti-wear hydraulic fluid

Mobil	Mobil Fluid 424

Amoco	Amoco 1000
International Harvester	Hy-Tran
Texaco	TDH
Shell	Donax TD
Union Oil	Hydraulic/Tractor Fluid
Chevron	Tractor Hydraulic Fluid
BP Oil	BP HYD TF
Boron Oil	Eldoran UTH
Exxon	Torque Fluid
Conoco	Power-Tran 3
Kendall	Hyken 052
Phillips	HG Fluid

Note: Oils within this group are interchangeable.

Group 2 Hydraulic Oil—Recommended for ambient temperatures consistently above 21° C (70° F):

ISO type 68 anti-wear hydraulic fluid

Mobil	DTE 26 or DTE 16
Shell	Tellus 68
Amoco	Rykon Oil 68
Arco	Duro AW S-315
Boron	Industron 53
BP Oil	Energol HLP68
Castrol	Hyspin AWS68
Chevron	Chevron EP68
Citgo	Citgo A/W68
Conoco	Super Hydraulic Oil 31
Exxon	Nuto H68
Gulf	68AW
Pennzoil	AW Hyd Oil 68
Phillips	Magnus A315
Standard	Industron 53
Texaco	Rando HD68
Union	Unax AW 315

Note: Oils within this group are interchangeable.

IMPORTANT: Two groups of hydraulic oil are specified to allow optimal operation of the machine in a wide range of temperatures encountered. The group 1 oils are a multi-viscosity hydraulic oil that allow operation at lower temperatures without the increased viscosity associated with straight viscosity oils.

Using the Mobil 424-type oils in the higher ambient temperatures may result in decreased efficiency in some hydraulic components compared to using the Mobil DTE 26 type oils.

The Mobil DTE 26 type oils are straight viscosity oils which remain slightly more viscous at higher temperatures than the multi-viscosity oils.

Using the Mobil DTE 26 type oils in the lower ambient temperatures may result in harder starting, increased engine laboring while cold, sluggish or non-operating valve spools while cold and increased filter back pressure due to the higher oil viscosity.

Select the set of conditions (either ambient temperatures above 21° C or below 38° C, and use that type of oil throughout the year, rather than changing oil types several times per year.

Group 3 Hydraulic Fluid (Biodegradable):

ISO VG 32/46 anti-wear Hydraulic fluid
Mobil EAL 224H

Note: This biodegradable hydraulic fluid in this group is not compatible with the fluids in group 1 or 2.

Note: When changing from one type of hydraulic oil to the other, remove all the old oil from the system, because some brands of one type are not completely compatible with some brands of the other type of hydraulic oil.

IMPORTANT: Use only the types of hydraulic oils specified. Other fluids could cause system damage.

1. Position the machine on a level surface, lower the cutting units and stop the engine.

2. Clean the area around the filler neck and cap of the hydraulic tank. Remove the cap from the filler neck.

3. Remove the dipstick from the filler neck and wipe it with a clean cloth. Insert it into the filler neck; then remove it and check the fluid level. It should be within 6 mm (1/4 inch) of

the mark on the dipstick.

4. If the level is low, add fluid to raise the level to the full mark.

5. Install the dipstick and cap onto the filler neck.

Check Rear Axle Lubricant (Model 03551 only)

The rear axle has three separate reservoirs which use SAE 80W-90 weight gear lube. Although the axle is shipped with lubricant from the factory, check the level before operating the machine.

1. Position the machine on a level surface.

2. Remove the check plugs (3) from the axle and make sure lubricant is up to the bottom of each hole.

3. If the level is low, remove the center fill plug and add enough lubricant to bring the level up to the bottom of the plug hole.

4. Remove each end check plug and add enough lubricant to bring the level up to the bottom of each plug hole.

5. Install all plugs.

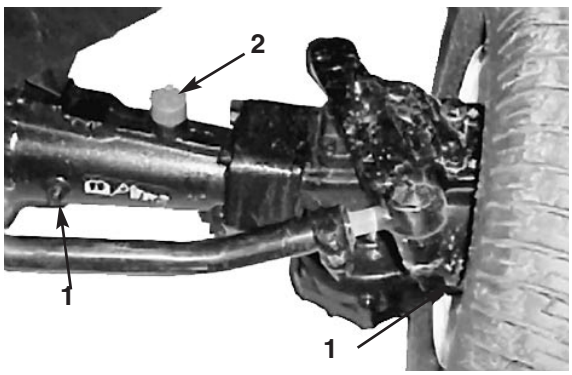

Figure 6

1. Check plug
2. Fill plug

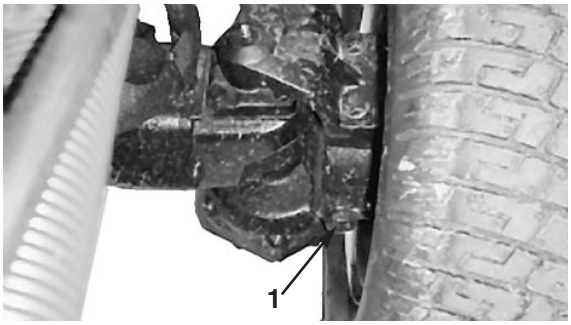

Figure 7

1. Left check plug (Rear of axle)

Check Reel-To-Bedknife Contact

Each day before operating, check the reel-to-bedknife contact, regardless of whether the quality of cut has been acceptable. There must be light contact across the full length of the reel and bedknife.

Check Wheel Nut Torque

WARNING

Tighten the wheel nuts to 61-75 Nm after 1–4 hours of operation and again after 10 hours of operation and every 250 hours thereafter. Failure to maintain correct torque could result in failure or loss of a wheel, which may result in personal injury.

Controls

Seat (Fig. 8)—The seat adjusting lever allows 10 cm (4 inches) fore and aft adjustment. The seat adjusting knob adjusts the seat for operators' weight. To adjust the seat fore and aft, pull lever on the left side of the seat assembly outward. After moving the seat to the desired location, release the lever to lock the seat into position. To adjust for the operator's weight, turn spring tension knob—clockwise to increase tension, counterclockwise to decrease spring tension.

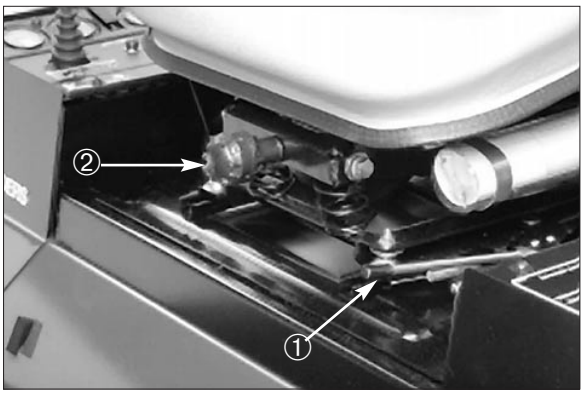

Figure 8

1. Seat adjusting level
2. Seat adjusting knob

Traction Pedal (Fig. 9)—Controls forward and reverse operation. Depress the top of the pedal to move forward and bottom to move backward. Ground speed depends on how far the pedal is depressed. For no load, maximum ground speed, fully depress the pedal while throttle is in FAST. To stop, reduce foot pressure on traction pedal and allow it to return to center position.

Brake Pedals (Fig. 9)—Two foot pedals operate individual wheel brakes for turning assistance, parking and to aid in sidehill traction. A Locking pin connects the pedals for parking brake operation and transport.

Parking Brake Latch (Fig. 9)—A knob on the left side of the console actuates the parking brake lock. To engage the parking brake, connect the pedals with the locking pin, push down on both pedals and pull the parking brake latch out. To release the parking brake, depress both pedals until the parking brake latch retracts.

Traction Speed Limiter (Fig .9)—Preset this lever to limit the amount the traction pedal can be depressed in the forward direction to maintain a constant mowing speed.

Fault Light (Fig. 9)— When lit, indicates a control system problem.

Speedometer (Fig. 9)—Indicates ground speed at which the machine is traveling.

Lower Mow/Raise Control Lever (Fig. 10)—The lever raises and lowers the cutting units and also starts and stops the reels.

Fuel Gauge (Fig. 10)—Shows the amount of fuel in the tank.

Engine Oil Pressure Warning Light (Fig. 10)—Indicates dangerously low engine oil pressure.

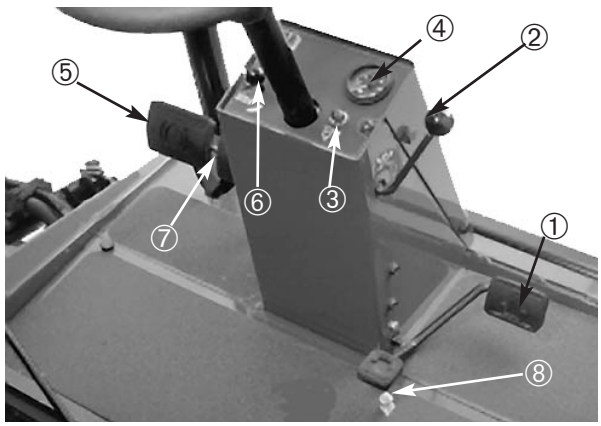

Figure 9

1. Traction pedal
2. Forward speed limiter
3. Reel control light
4. Speedometer
5. Brake pedals
6. Parking brake latch
7. Locking pin
8. Reverse speed limiter

Hour Meter (Fig. 10)—Shows the total hours the machine has been operated.

Engine Coolant Temperature Warning Light (Fig. 10)—The light illuminates and the engine shuts down if the coolant reaches a dangerously high temperature.

Glow Plug Indicator Light (Fig. 10)—When lit, indicates glow plugs are on.

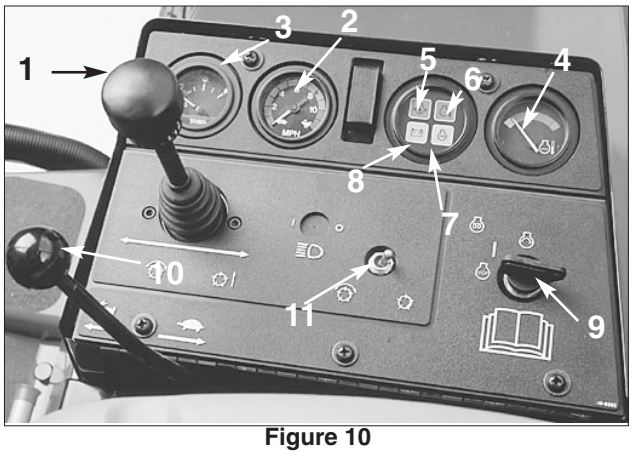

Figure 10

1. Lower mow/raise control lever
2. Speedometer
3. Fuel gauge
4. Engine coolant temperature gauge
5. Engine oil pressure warning light
6. Engine coolant temperature warning light.
7. Glow plug indicator light
8. Charge indicator
9. Key switch
10. Throttle control
11. Enable/Disable switch

Charge Indicator (Fig. 10)—Illuminates when system charging circuit malfunctions.

Key Switch (Fig. 10)—Three positions: OFF, ON/Preheat and START.

Throttle Control (Fig. 10)—Move the control forward to increase engine speed, rearward to decrease speed.

Enable/Disable Switch (Fig. 10)—Used with lower mow/raise control lever (Joystick) to operate reels. Reels can be raised, but not lowered, when in mid position.

Backlap Knobs (Fig. 11)—Used with lower mow/raise control lever for backlapping operation. Refer to *Cutting Unit Maintenance, Backlapping*.

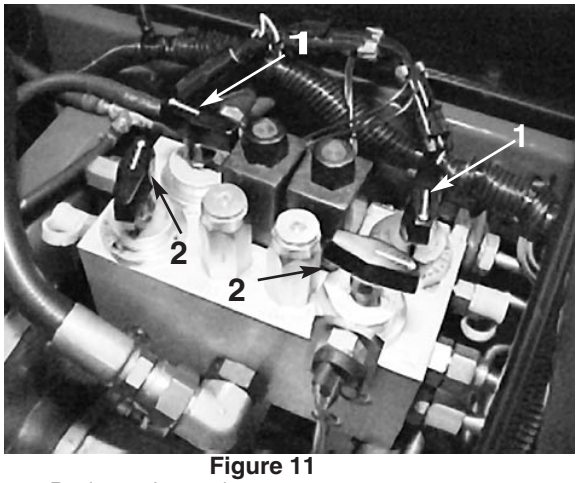

Figure 11

1. Reel speed controls
2. Backlap knobs

Reel speed Controls (Fig. 11)—Control rpm of the front and rear cutting units. The #1 position is for backlapping. The remaining settings are for mowing operations.

Operation

CAUTION

Before servicing or making adjustments to the machine, stop the engine and remove the key from the switch.

Starting and Stopping

IMPORTANT: The fuel system must be bled in the following situations.

A. Initial start up of a new machine.

B. The engine has ceased running due to lack of fuel.

C. Maintenance has been performed upon fuel system components; i.e., filter replaced, separator serviced, etc.

Refer to *Bleeding The Fuel System*

1. Sit on the seat, keeping your foot off the traction pedal. Assure the parking brake is engaged, the traction pedal is in NEUTRAL, the throttle is in the FAST position and the ENABLE / DISABLE switch is in the DISABLE position.

2. Turn the ignition switch to the ON/Preheat position. An automatic timer will control preheat for six seconds. After preheat, turn the key to START. CRANK THE ENGINE FOR NO LONGER THAN 15 SECONDS. Release the key when the engine starts. If additional preheat is required, turn the key to OFF then to the ON/Preheat position. Repeat the process as needed.

3. Run the engine at idle speed or partial throttle until the engine warms up.

Note: Move the throttle to FAST when restarting a warm engine.

4. To stop, move all controls to NEUTRAL and set the parking brake. Return the throttle to the idle position, turn the key to OFF and remove it from switch.

Bleeding the Fuel System

1. Raise the hood.

2. Loosen the air bleed screw on top of the fuel filter/water separator (Fig. 12)

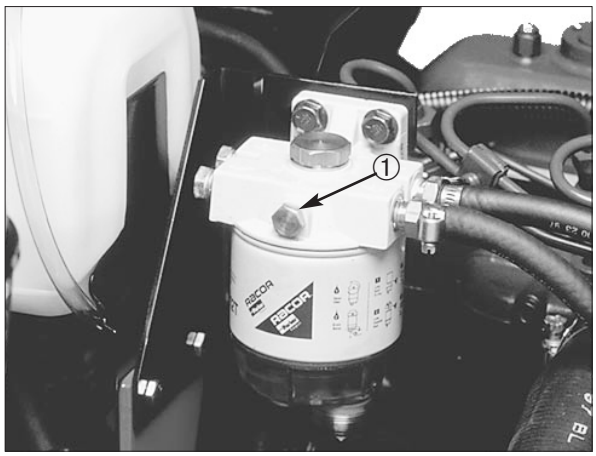

Figure 12

1. Air bleed screw

3. Pump the lever on the fuel pump (Fig. 13) until a solid stream of fuel flows out around the screw. Tighten the air bleed screw.

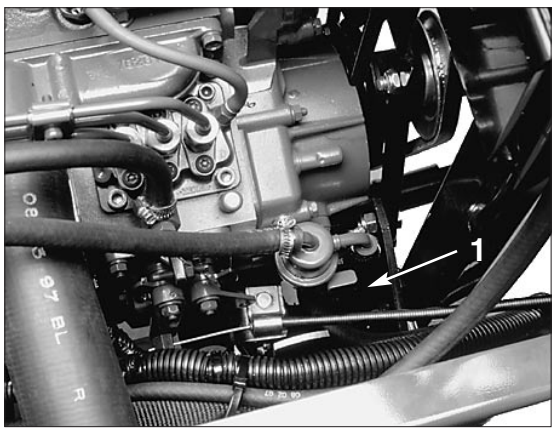

Figure 13

1. Fuel injection pump lever

4. Open the air bleed screw on the fuel injection pump with a 12 mm wrench.

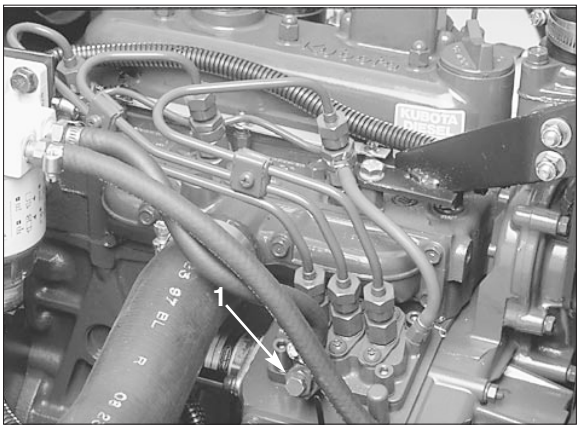

Figure 14

1. Fuel injection pump bleed screw

5. Pump the lever on the fuel pump (Fig. 12) until a solid stream of fuel flows out around the screw on the fuel injection pump. Tighten the air bleed screw.

Note: Normally the engine should start after the above bleeding procedures. However, if the engine does not start, air may be trapped between the injection pump and the injectors; refer to *Bleeding Air From The Injectors*.

Setting Reel Speed

To achieve a consistent, high quality of cut, and a uniform after-cut appearance, it is important that the reel speed be matched to the height of cut.

Adjust the reel speed controls as follows:

1. Select the height-of-cut at which the cutting units should be set.

2. Choose the desired ground speed best suited for conditions.

3. Using the appropriate graph (Fig. 15) for 5-, 7- or 11-blade cutting units, determine the correct reel speed setting.

4. To set reel speed, rotate knobs (Fig. 25) until indicator arrows are in line with the number designating desired setting.

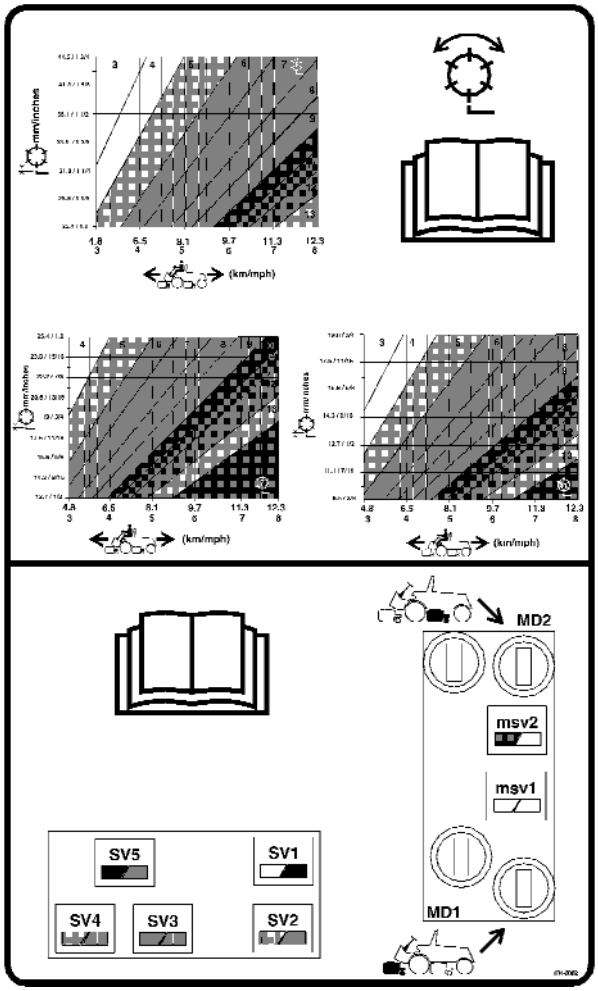

Figure 15

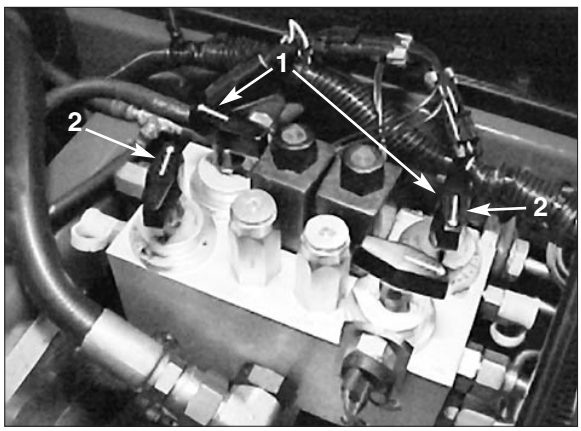

Figure 16

1. Backlap Knobs
2. Reel Speed Controls

5. Operate the machine for several days, then examine the cut to ensure satisfaction with the quality of cut. The reel speed selector knobs may be set one position on either side of the position indicated on the chart to account for

differences in grass condition, grass length removed, and personal preference of the superintendent. For a cut with more grass removed but slightly more clip visibility, move the reel speed selector knobs one position lower than specified. For a cut with less grass removed and slightly less clip visibility, move the reel speed selector knobs one position higher than specified.

Note: Reel speed can be increased or decreased to compensate for turf conditions.

Adjusting Rear Lift Arm Counterbalance

The counterbalance spring on the rear cutting unit lift arms can be adjusted to compensate for different turf conditions. Decreased counterbalance will help keep the cutting units on the ground when mowing at higher speeds and helps maintain a uniform height-of-cut in rough conditions or in areas of thatch build up.

Each counterbalance spring may be adjusted to one of three settings. Each increment increases or decreases down pressure on the cutting units.

1. Position the machine on a level surface, lower the cutting units, stop the engine, engage the parking brakes and remove the key from the ignition switch.

CAUTION

Springs are under tension, use caution when adjusting.

2. Remove the capscrew and locknut while relieving spring tension.

3. Move spring bolt to desired location and install capscrew and locknut, while relieving spring tension.

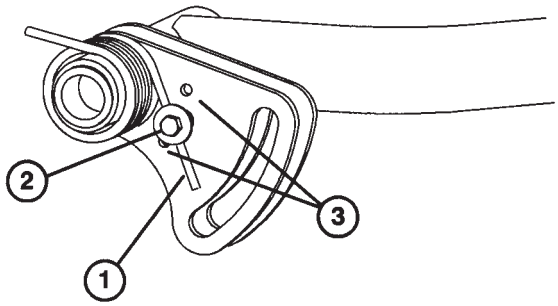

Figure 17

1. Counterbalance spring
2. Spring bolt
3. Adjustment locations

Towing the Traction Unit

If it becomes necessary to tow the machine, tow it forward only and at a speed no greater than 4.8 kmh (3 mph).

Note: If you exceed these towing limits, severe damage to the hydrostatic transmission may occur.

To tow a disabled machine:

1. Loosen and remove the capscrews securing the drive shaft to the engine. Loosen the capscrews clamping the drive shaft to transmission (Fig. 18). Remove the drive shaft.

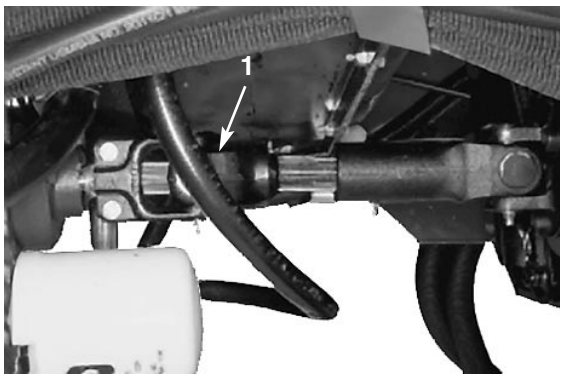

Figure 18

1. Drive shaft

Important: If the drive shaft is not removed before towing, the transmission input shaft will not be able to rotate, and not allow the transmission to maintain its internal lubrication. Severe damage to the hydrostatic transmission will occur.

2. Attach a suitable chain, strap or cable to the center of the front frame member (Fig. 19).

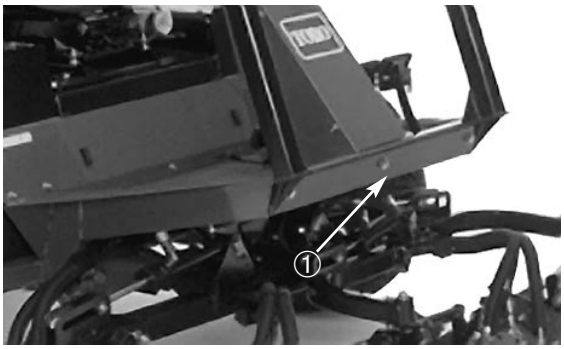

Figure 19
1. Center of front frame member

Note: Lock both brake pedals together before towing.

3. Attach the other end of the towing device to a vehicle that is capable of towing the machine safely at speeds below 4.8 kmh.

4. An operator must be on the machine to steer it and keep the traction pedal fully depressed in the forward position while towing.

5. When towing is completed, reinstall the drive shaft as shown in Figure 18. (The splines are designed to allow assembly only when the two halves of the shaft are properly oriented.)

Diagnostic Light

The RM 5500-D is equipped with a diagnostic light that indicates if the electronic controller is functioning correctly. The green diagnostic light is located under the control panel, next to the fuse block. When the electronic controller is functioning correctly and the key switch is moved to the ON position, the controller diagnostic light will be illuminated. The light will blink if the controller detects a malfunction in the electrical system. The light will stop blinking and automatically reset when the key switch is turned to the OFF position.

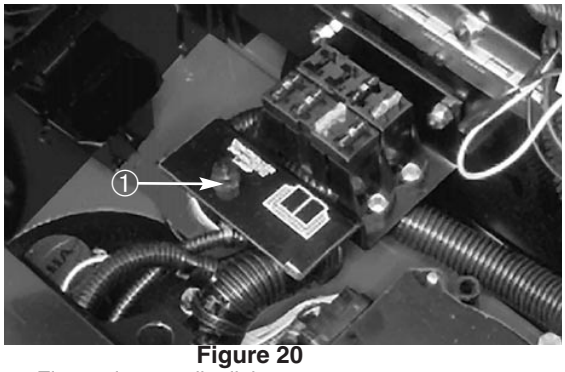

Figure 20
1. Electronic controller light

When the controller diagnostic light blinks, one of the following problems has been detected:

1. One of the outputs has been shorted.
2. One of the outputs has an open circuit.

Using the diagnostic display, determine which output is malfunctioning; refer to *Checking Interlock Switches.*

If the diagnostic light is not illuminated when the key switch is in the ON position, the electronic controller is not operating. Possible causes are:

1. Connector is not connected.
2. The light is burned out.
3. Fuses are blown.
4. Not functioning correctly.

Check electrical connections, input fuses and the diagnostic light bulb to find the malfunction. Make sure the connector is secured to the wire harness connector.

Diagnostic ACE Display

The RM5500-D is equipped with an electronic controller that controls most machine functions. The controller determines what function is required for various input switches (i.e., seat switch, key switch, etc.) and turns on the outputs to actuate solenoids or relays for the requested machine function.

For the electronic controller to control the machine as desired, each of the input switches, output solenoids and relays must be connected and functioning properly.

The Diagnostic ACE display is a tool to help the

user verify correct electrical functions of the machine.

Checking Interlock Switches

The purpose of the interlock switches is to prevent the engine from cranking or starting unless the traction pedal is in NEUTRAL, the Enable/Disable switch is in DISABLE and the Lower Mow/Raise control is in the neutral position. In addition, the engine will stop when the traction pedal is depressed with operator off the seat or when parking brake is engaged.

CAUTION

THE INTERLOCK SWITCHES ARE FOR THE PROTECTION OF THE OPERATOR AND BYSTANDERS, AND TO ENSURE CORRECT OPERATION OF THE MACHINE, SO DO NOT BYPASS OR DISCONNECT THEM. CHECK OPERATION OF THE SWITCHES DAILY TO ASSURE THE INTERLOCK SYSTEM IS OPERATING. IF A SWITCH IS DEFECTIVE, REPLACE IT BEFORE OPERATING THE 5200-D. THE CONTROLLER HAS THE ABILITY TO DETECT BYPASSED SWITCHES AND MAY PREVENT THE OPERATION OF THE MACHINE IF SWITCHES ARE BYPASSED. **DO NOT RELY ENTIRELY ON SAFETY SWITCHES—USE COMMON SENSE!**

To verify interlock switch function:

1. Park the machine on a level surface, lower the cutting units, stop the engine and engage the parking brake.

2. Open the control panel cover. Locate the wire harness and connectors near the controller. Carefully unplug the connector from the harness.

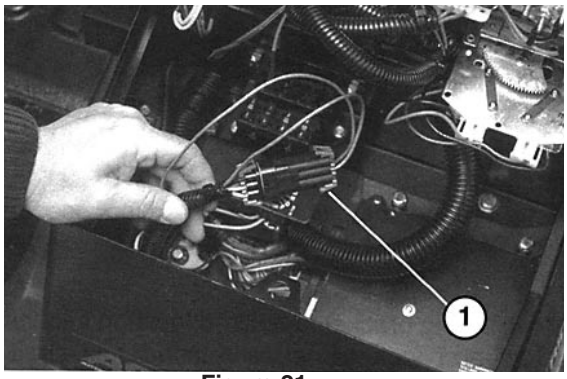

Figure 21
1. Wire Harness and Connectors

3. Connect the Diagnostic ACE display connector to the harness connector. Make sure the correct overlay decal is positioned on the Diagnostic ACE display.

4. Turn the key switch to ON, but do not start the machine.

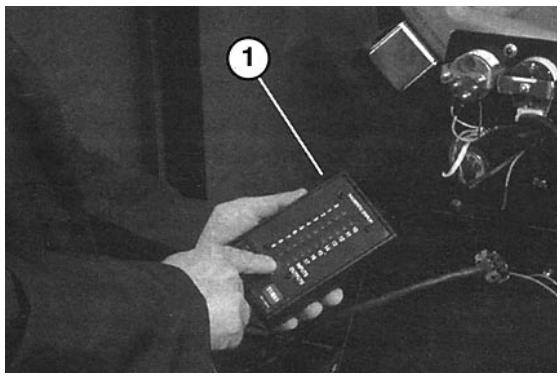

Figure 22
1. Diagnostic ACE

Note: The red text on the overlay decal refers to input switches and the green text refers to outputs.

5. The “inputs displayed” LED (Light Emitting Diode) on the lower right column of the Diagnostic ACE should be illuminated. If the “outputs displayed” LED is illuminated, press the toggle button on the Diagnostic ACE to change the LED to “inputs displayed”.

6. The Diagnostic ACE will illuminate the LED associated with each input when that input switch is closed.

Individually, change each of the switches from

open to closed (i.e., sit on the seat, engage the traction pedal, etc.), and note that the appropriate LED on the Diagnostic ACE will blink on and off when the corresponding switch is closed. Repeat this check on each switch.

7. If a switch is closed and the appropriate LED does not turn on, check all wiring and connections to the switch and/or check switches with an ohm meter. Replace any defective switches and repair any defective wiring.

   The Diagnostic ACE also has the ability to detect which output solenoids or relays are turned on. This is a quick way to determine if a machine malfunction is electrical or hydraulic.

To verify output function:

1. Park the machine on a level surface, lower the cutting units, stop the engine and engage the parking brake.

2. Open the control panel cover. Locate the wire harness and connectors near the controller. Carefully unplug the connector from the harness connector.

3. Connect the Diagnostic ACE connector to the harness connector. Make sure the correct overlay decal is positioned on the Diagnostic ACE.

4. Turn the key switch to ON, but do not start the engine.

   Note: The red text on the overlay decal refers to input switches and the green text refers to outputs.

5. The “output displayed” LED on the lower right column of Diagnostic ACE should be illuminated. If the “inputs displayed” LED is illuminated, press the toggle button on Diagnostic ACE to change the LED to “outputs displayed”.

   Note: It may be necessary to toggle between “inputs displayed” and “outputs displayed” several times to do the following step. To toggle back and forth, press the toggle button once. This may be done as often as required. DO NOT HOLD THE BUTTON.

6. Sit on the seat and try to operate the desired function of the machine. The appropriate output LEDs should illuminate to show that the ECU is turning on that function. (Refer to the list on page 25, to be certain of the specified output LEDs.

Note: If any output LED is blinking, this indicates an electrical problem with that OUTPUT. Repair/ replace defective electrical parts immediately. To reset a blinking LED, turn the key switch “OFF’, then back “ON”.

It no output LEDs are blinking, but the correct output LEDs do not illuminate, verify that the required input switches are in the necessary positions to allow that function to occur. Verify correct switch function.

If the output LEDs are on as specified, but the machine does not function properly, this indicates a non-electrical problem.

Note: Due to electrical system constraints, the output LEDs for “START”, “PREHEAT” and “ETR/ALT” may not blink even though an electrical problem may exist for those functions. If the machine problem appears to be with one of these functions, check the electrical circuit with a volt/ohm meter to verify that no electrical problem exists for these functions.

If each output switch is in the correct position and functioning correctly, but the output LEDs are not correctly illuminated, this indicates an ECU problem. If this occurs, contact your Toro Distributor for assistance.

IMPORTANT: The Diagnostic ACE display must not be left connected to the machine. It is not designed to withstand the environment of the machine's every day use. When finished using

the Diagnostic ACE, disconnect it from the machine and reconnect the connector to the harness connector. Machine will not operate without the connector installed on the harness. Store the Diagnostic ACE in a dry, secure location not on the machine.

Hydraulic Valve Solenoid Functions

Use the list below to identify and describe the different functions of the solenoids in the hydraulic manifold. Each solenoid must be energized to allow the function to occur.

Solenoid	Function
MSV1	Front reel circuit
MSV2	Rear reel circuit
SV4	Lift/lower front wing cutting units
SV3	Lift/lower center cutting unit
SV5	Lift/lower rear cutting unit
SVI	Lower any cutting units
SV1, SV2	Lift any cutting units

Operating Characteristics

Familiarization—Before mowing grass, practice operating the machine in an open area. Start and stop the engine. Operate in forward and reverse. Lower and raise the cutting units and engage and disengage the reels. When you feel familiar with the machine, practice operating up and down slopes at different speeds.

The brakes can be used to assist in turning the machine. However, use them carefully, especially on soft or wet grass conditions because the turf may be torn accidentally. Individual turning brakes may also be used to help maintain traction. For example, in some slope conditions, the uphill wheel slips and loses traction. If this situation occurs, depress the uphill turn pedal gradually and intermittently until the uphill wheel stops slipping, thus, increasing traction on the downhill wheel.

Warning System—If a warning light comes on during operation, stop the machine immediately and correct the problem before continuing operation. Serious damage could occur if the machine is operated with a malfunction.

Mowing—Start the engine and move the throttle to FAST so the engine runs at maximum speed. Move the ENABLE/DISABLE switch to ENABLE and use the LOWER MOW/RAISE lever to control the cutting units (front cutting units are timed to lower before the rear cutting units lower). To move forward and cut grass, press the traction pedal forward.

Before servicing or making adjustments to the machine, stop the engine and remove the key from the switch. Lower the cutting units to the ground.

Transport—Move the ENABLE/DISABLE switch to DISABLE and raise the cutting units to the transport position. Be careful when driving between objects so you do not accidentally damage the machine or cutting units. Use extra care when operating the machine on slopes. Drive slowly and avoid sharp turns on slopes to prevent roll overs. The cutting units should be lowered when going downhill for steering control. .

Maintenance

Minimum Recommended Maintenance Intervals

Maintenance Procedure	Maintenance Interval & Service				
	Every 50 hours	Every 100 hours	Every 200 hours	Every 400 hours	Every 800 hours
Check battery fluid level Check battery cable connections Lubricate all grease fittings Change engine oil Inspect air filter, dust cap and baffle					
‡ Replace engine oil filter † Check fan and alternator belt tension Inspect cooling system hoses					
Drain moisture—hydraulic tank Drain moisture—fuel tank Check reel bearing preload †Torque wheel lug nuts					
Service the air cleaner (if indicator shows red) Replace the fuel filter Inspect traction linkage movement ‡ Torque cylinder head bolts and adjust valves ‡ Check engine rpm (idle and full throttle)					
Change hydraulic fluid † Change transmission fluid † Replace transmission filter Check rear wheel toe-in Rear axle service – pack rear wheel bearings (2WD) – change rear axle lubricant (4WD)					

† Initial break in at 10 hours
‡ Initial break in at 50 hours

Replace moving hydraulic hoses
Replace safety switches
Flush the cooling system and replace fluid
Drain and flush the fuel tank
Drain and flush the hydraulic tank

Recommendations:
Items are recommended every 1600 hours or two years, whichever occurs first.

Service Interval Charts

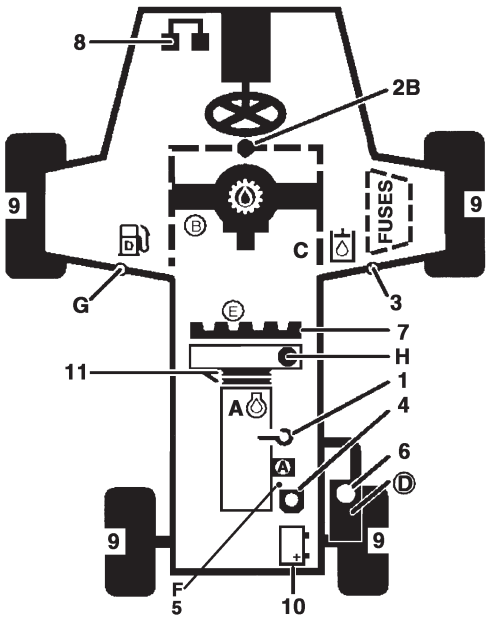

CHECK/SERVICE (DAILY)

1. Oil level, engine
2. Oil level, transmission
3. Oil level, hydraulic tank
4. Coolant level, radiator
5. Fuel/Water separator
6. Precleaner—air cleaner
7. Radiator screen
8. Brake function
9. Tire pressure
10. Battery
11. Belts (Fan, alt)

Fluid Specifications/Change Intervals

See operator's manual for detailed information.	Fluid Type	Capacity	Change Interval		Filter Part No.
			Fluid	Filter	
A. Engine oil	SAE 10W30CD	3.8 l	50 hours	100 hours	99-8384
B. Transmission oil	Mobil 424	4.7 l	800 hours	800 hours	75-1330
C. Hydraulic circuit oil	Mobil 424	32.2 l	800 hours	See indicator	94-2621
D. Air cleaner				400 hours	98-9763
E. Filter, in-line fuel				400 hours	98-7612
F. Water separator				400 hours	98-9764
G. Fuel tank	No. 2 Diesel	37.9 l	Drain and flush, 2 years		
H. Coolant	50/50 Ethylene glycol/water	9.1 l	Drain and flush, 2 years		

Greasing Bearings and Bushings

The machine has grease fittings that must be lubricated regularly with No. 2 General Purpose Lithium Base Grease. If the machine is operated under normal conditions, lubricate all bearings and bushings after every 50 hours of operation. Lubricate bearings and bushings immediately after every washing regardless of the interval listed.

1. The grease fitting locations and quantities are. Engine Drive shaft (3), (Fig. 23); Cutting unit carrier frame and pivot (2 each), (Fig. 24); Rear lift arm pivots (2), Drive shaft clutch (1) (Fig. 25); Rear axle tie rod (2), Steering cylinder ball joints (2), Axle steering pivots (2) Rear axle pivot (1) (Fig. 26); Traction control linkage at transmission (1), Drive shaft support bearing (1), Rear axle drive shaft (3) (Fig. 27); Brake pedal (1) (Fig. 28); Lift cylinders (5) (Fig. 29), front lift arm pivots (3) (Fig. 30) and fan drive pulley (Fig. 31).

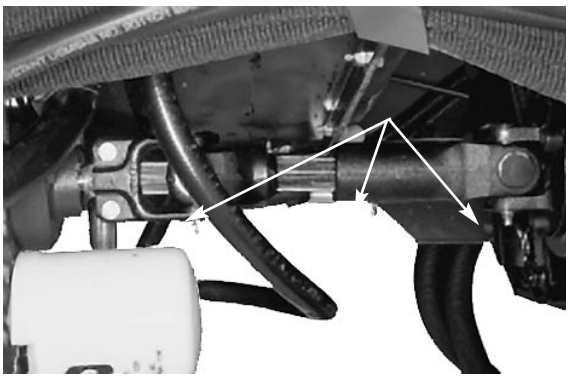

Figure 23

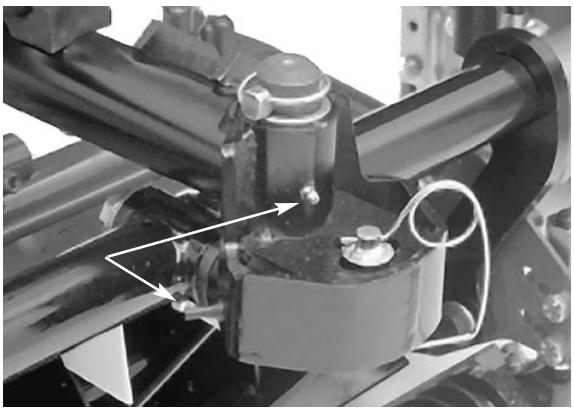

Figure 24

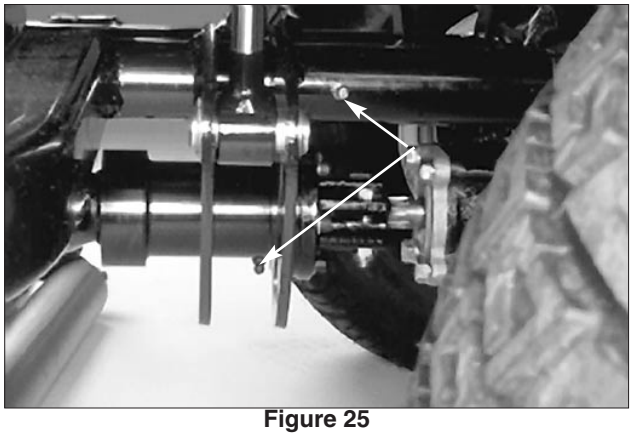

Figure 25

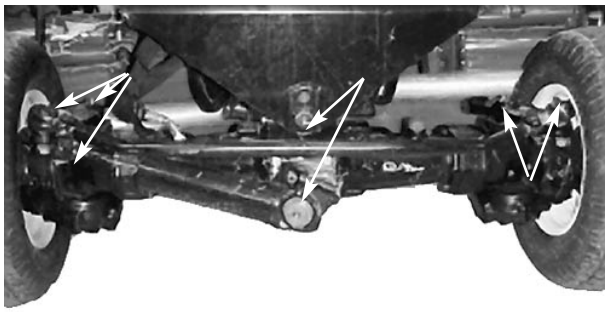

Figure 26

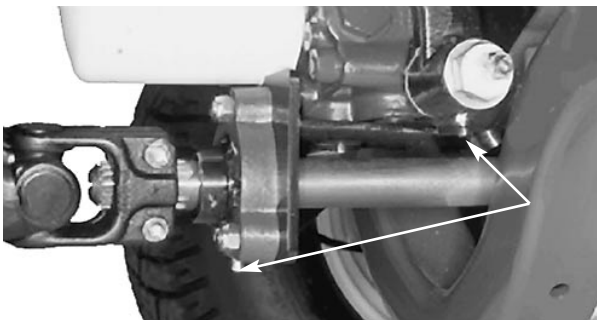

Figure 27



Figure 28

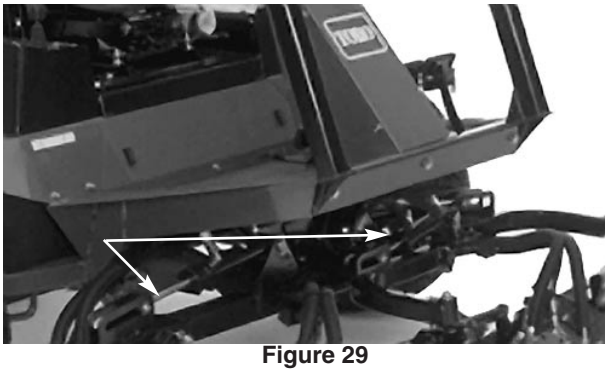

Figure 29

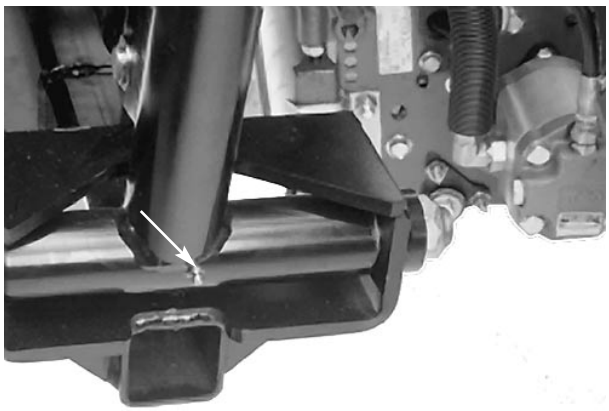

Figure 30

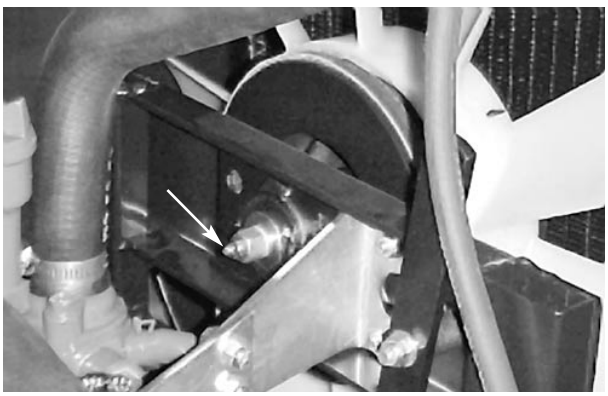

Figure 31

General Air Cleaner Maintenance

CAUTION

Before servicing or making adjustments to the machine, stop the engine and remove the key from the switch.

1. Check the air cleaner body for damage that could possibly cause an air leak. Replace a damaged air cleaner body.

2. Service the air cleaner filters whenever the air cleaner indicator (Fig. 37) shows red, or every 400 hours (more frequently in extreme dusty or dirty conditions). Do not over service air filter.

3. Be sure the cover is sealing around the air cleaner body.

Servicing the Air Cleaner Bowl

Normally, inspect the precleaner bowl daily. When conditions are extremely dusty and dirty, inspect more often. Don't let dust or debris build up above the level marks on the precleaner bowl.

1. Remove the thumbscrew; separate the cover from the precleaner bowl.

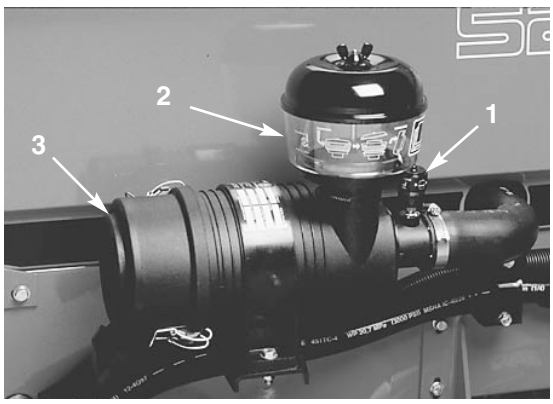

Figure 32

1. Air cleaner indicator
2. Pre cleaner bowl
3. Dust cup

2. Empty the precleaner bowl and wipe it clean.

3. Assemble and the install precleaner bowl, cover and thumb screw.

Note: When operating the machine in extremely dusty conditions, an optional extension tube (Toro Part No. 43-3810), which raises the precleaner bowl above the hood, is available from your local authorized Toro distributor.

Servicing the Air Cleaner

1. Release the latches securing the air cleaner cover to the air cleaner body. Separate the cover from the body. Clean the inside of the air cleaner cover.

2. Gently slide the filter element out of the air cleaner body to reduce the amount of dust dislodged. Avoid knocking the filter against the air cleaner body.

3. Inspect the filter element and discard if damaged. Do not wash or reuse a damaged filter.



Figure 33

1. Filter element

Washing Method

- Prepare a solution of filter cleaner and water and soak the filter element about 15 minutes. Refer to directions on the filter cleaner carton for complete information.

- After soaking the filter for 15 minutes, rinse it with clear water. Maximum water

pressure must not exceed 276 kPa to prevent damage to the filter element.

- Dry the filter element using warm, flowing air (71° C) max), or allow the element to air dry. Do not use a light bulb to dry the filter element because damage could result.

Compressed Air Method

- Blow compressed air from inside to the outside of dry filter element. Do not exceed 689 kPa to prevent damage to the element.

- Keep the air hose nozzle at least 5 cm from filter and move the nozzle up and down while rotating the filter element. Inspect for holes and tears by looking through the filter toward a bright light.

5. Inspect the new filter for shipping damage. Check the sealing end of the filter. Do not install a damaged filter.

6. Insert the new filter properly into the air cleaner body. Make sure the filter is sealed properly by applying pressure to the outer rim of the filter when installing. Do not press on the flexible center of the filter.

7. Reinstall the cover and secure the latches.

8. Reset the indicator if it is showing red.

Engine Oil and Filter

Change the oil and filter after the first 50 hours of operation; thereafter change the oil after every 50 hours and the oil filter after every 100 hours.

1. Remove the drain plug and let oil flow into a drain pan. When oil stops, install the drain plug.

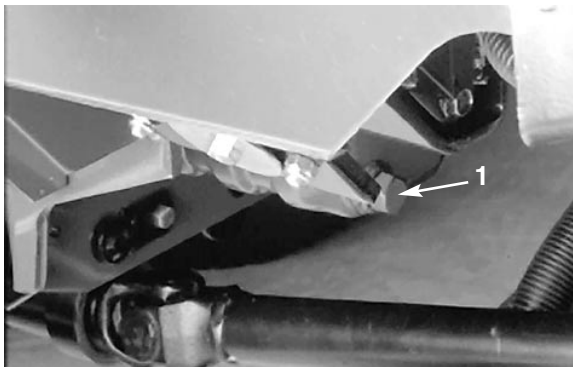

Figure 34

1. Engine oil drain plug

2. Remove the oil filter. Apply a light coat of clean oil to the new filter seal before screwing it on. DO NOT OVER TIGHTEN.

3. Add oil to the crankcase.



Figure 35

1. Engine oil filter

Fuel System

Fuel Tank

Drain and clean the fuel tank every two years. Also, drain and clean the tank if the fuel system becomes contaminated or if the machine is to be stored for an extended period. Use clean fuel to flush out the tank.

Fuel Lines and Connections

Check lines and connections every 400 hours or yearly, whichever comes first. Inspect for deterioration, damage, or loose connections.

Fuel Filter/Water Separator

Drain water or other contaminants from the fuel filter/water separator (Fig. 36) daily.

1. Locate the fuel filter, under the hydraulic tank, and place a clean container under it.

2. Loosen the drain plug on bottom of the filter canister. Tighten the plug after draining.

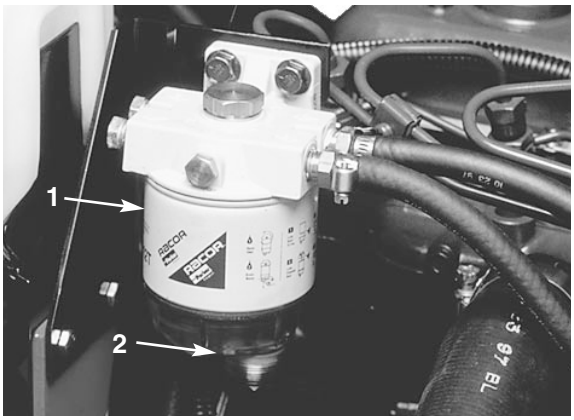

Figure 36
1. Fuel filter/water separator
2. Drain plug

Replace the filter canister after every 400 hours of operation.

1. Clean the area where the filter canister mounts.

2. Remove the filter canister and clean the mounting surface.

3. Lubricate the gasket on the filter canister with clean oil.

4. Install the filter canister by hand until the gasket contacts the mounting surface, then rotate it an additional 1/2 turn.

Replacing the Fuel Filter

Replace the fuel filter after every 400 operating hours or yearly, whichever occurs first.

1. Clean the area where the filter bowl mounts.

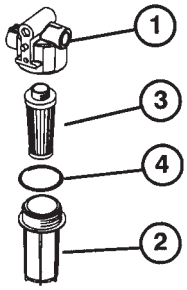

Figure 37
1. Fuel filter mounting head
2. Filter bowl
3. Filter
4. 0-ring

2. Remove the filter bowl and clean the mounting surface.

3. Remove the filter from the bowl and replace it with a new filter.

4. Install the filter bowl by hand until the O-ring contacts the mounting surface.

Bleeding Air from the Injectors

Note: This procedure should be used only if the fuel system has been purged of air through normal priming procedures and engine will not start; refer to *Bleeding Fuel System.*

1. Loosen the pipe connection to the No. 1 nozzle and holder assembly.

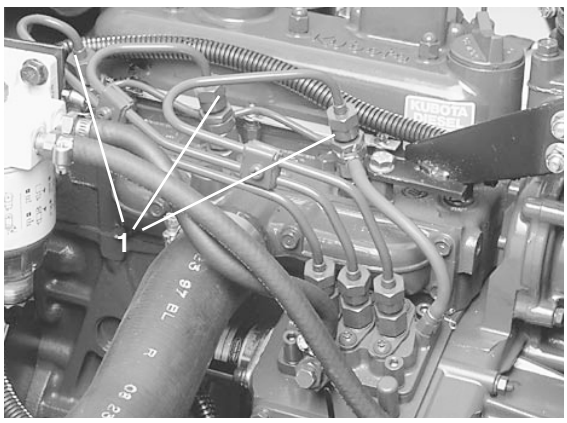

Figure 38
1. Fuel injectors (3)

2. Move the throttle to the FAST position.

3. Turn the key to the START position and watch fuel flow around the connector. Turn the key to OFF when solid flow is observed.

4. Tighten the pipe connector securely.

5. Repeat the steps on the remaining nozzles.

Engine Cooling System

1. **Removing Debris**—Remove debris from the screen, oil coolers and radiator daily, clean more often in dirty conditions.

   A. Turn the engine off and raise the hood. Clean the engine area thoroughly of all debris.

   B. Loosen the clamps and pull up on the screen to slide it out of the mounting tracks. Clean the screen thoroughly with water or compressed air.

   C. Slightly raise the oil coolers and pivot them forward. Clean both sides of the oil coolers and the radiator area thoroughly with water or compressed air. Pivot the oil coolers back into position.

   D. Install the screen and close the hood.

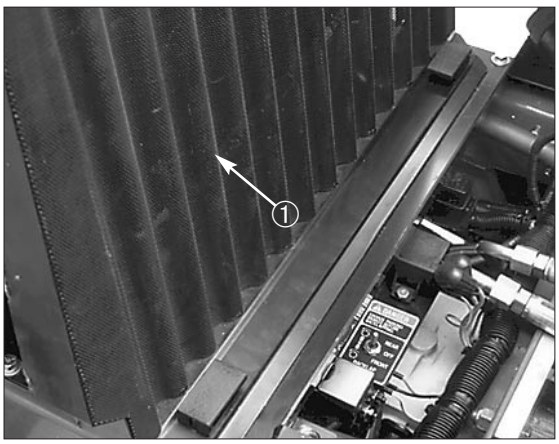

Figure 39

1. Screen

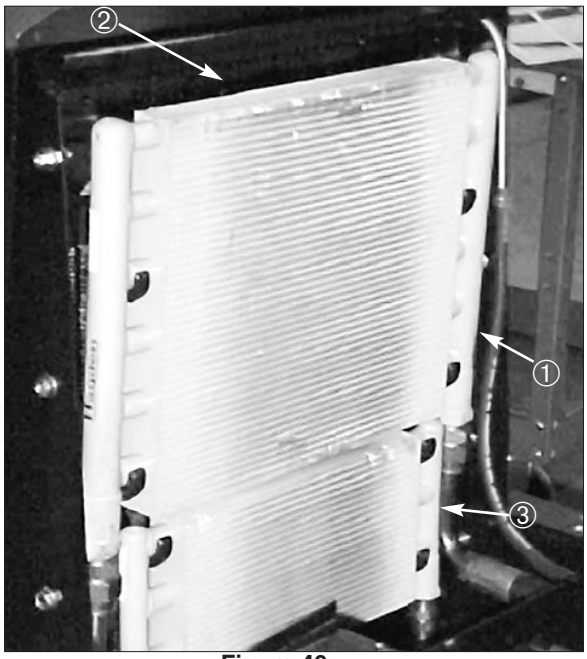

Figure 40

1. Reel oil cooler
2. Radiator
3. Transmission oil cooler

Servicing the Engine Belts

Check the condition and tension of all belts after the first day of operation and every 100 operating hours thereafter.

Alternator Belt (Fig. 41)

To Check Tension:

1. Open the hood.

2. Check tension by depressing the belt midway between the alternator and crankshaft pulleys with 32 Nm of force. Belt should deflect 1.11 cm. If the deflection is incorrect, go to step 3. If correct, continue operation.

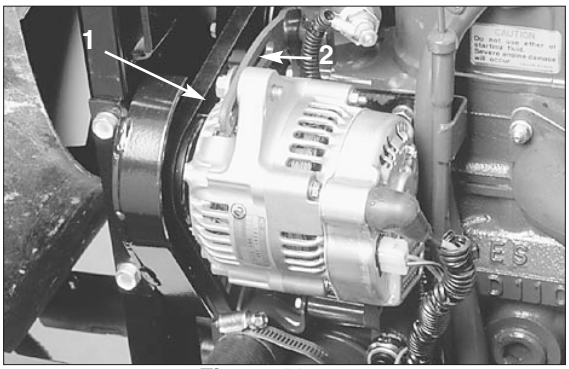

Figure 41

1. Alternator belt
2. Brace

3. Loosen the bolt securing the brace to the engine and the bolt securing the alternator to the brace.

4. Insert a pry bar between the alternator and engine and pry out on the alternator.

5. When proper tension is achieved, tighten the alternator and brace bolts to secure adjustment.

Cooling Fan Belt (Fig. 42)

1. Loosen the lock nut on the belt tensioner lever.

2. Apply 7–14 Nm of force at the end of the lever to set the proper tension on the fan belt.

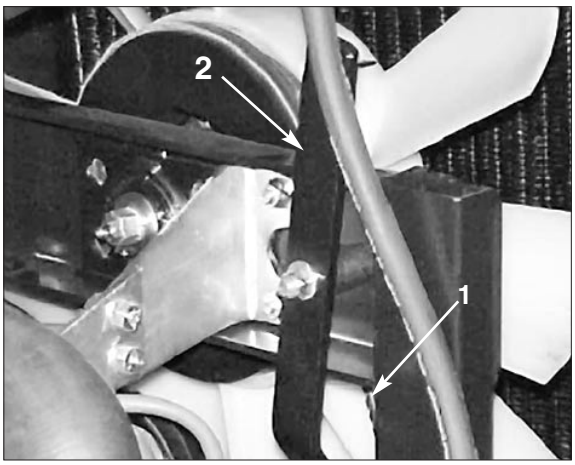

Figure 42

1. Cooling fan belt
2. Tensioner lever

3. Tighten the lock nut to secure adjustment.

Adjusting the Throttle

1. Position the throttle lever forward so that it stops against the seat base slot.

2. Loosen the throttle cable connector on the lever arm at the injection pump.

3. Hold the injection pump lever arm against the high idle stop and tighten the cable connector.

Note: When tightened, the cable connector must be free to swivel.

4. Torque the lock nut to 54–75 Nm. The maximum force required to operate the throttle lever should be 27 Nm.

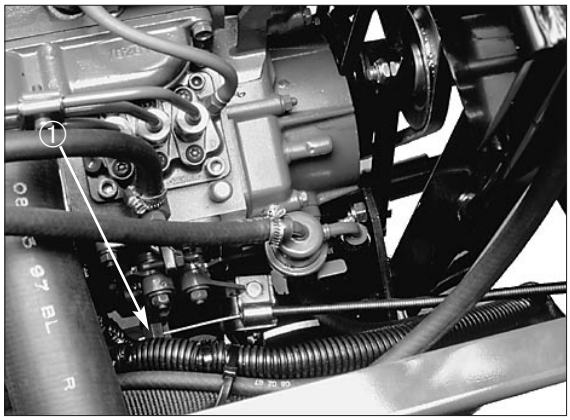

Figure 43

1. Injection pump lever a8rm

Changing Hydraulic Fluid

CAUTION

Before servicing or making adjustments to the machine, stop the engine and remove the key from the switch.

Change hydraulic fluid after every 800 operating hours, in normal conditions. If fluid becomes contaminated, contact your local TORO distributor because the system must be flushed. Contaminated fluid looks milky or black when compared to clean oil.

1. Turn the engine off and raise the hood.

2. Remove the drain plug from the hydraulic reservoir and let hydraulic fluid flow into a drain pan. Reinstall and tighten plug when hydraulic fluid stops draining.

3. Fill the reservoir with 32 l of hydraulic fluid. Refer to Checking Hydraulic Fluid.

   IMPORTANT: Use only hydraulic fluids specified. Other fluids could cause system damage.

4. Install the reservoir cap. Start the engine and use all hydraulic controls to distribute hydraulic fluid throughout the system. Also check for leaks. Then stop the engine.



Figure 44

1. Hydraulic reservoir

5. Check the level of fluid and add enough to raise the level to the FULL mark on the dipstick. DO NOT OVER FILL.

Replacing the Hydraulic Filter

The hydraulic system filter head is equipped with a service interval indicator. With the engine running, view the indicator—it should be in the GREEN zone. When the indicator is in the RED zone, the filter element should be changed.

Use the Toro replacement filter (Part No. 94-2621).

IMPORTANT: Use of any other filter may void the warranty on some components.

1. Position the machine on a level surface, lower the cutting units, stop the engine, engage the parking brakes and remove the key from the ignition switch.

2. Clean the area around the filter mounting area. Place a drain pan under the filter and remove the filter.

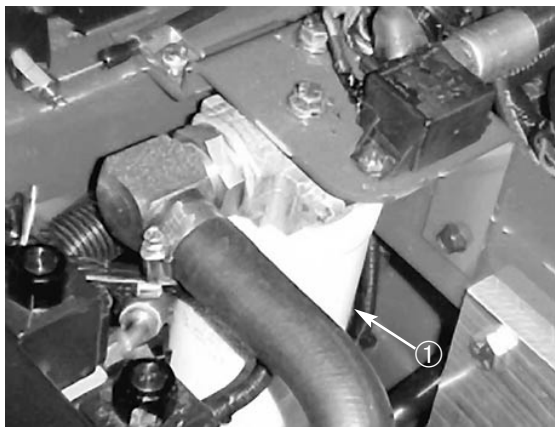

Figure 45

1. Hydraulic Filter

3. Lubricate the new filter gasket and fill the filter with hydraulic fluid.

4. Assure the filter mounting area is clean. Screw the filter on until the gasket contacts the mounting plate. Then tighten the filter one-half turn.

5. Start the engine and let it run for about two minutes to purge air from the system. Stop the engine and check for leaks.

Checking Hydraulic Lines and Hoses

WARNING

Keep your body and hands away from pin-hole leaks or nozzles that eject high-pressure hydraulic fluid. Use cardboard or paper to find hydraulic leaks. Hydraulic fluid escaping under pressure can penetrate skin and cause injury. Fluid accidentally injected into the skin must be surgically removed within a few hours by a doctor familiar with this form of injury or gangrene may result.

Daily, check hydraulic lines and hoses for leaks, kinked lines, loose mounting supports, wear, loose fittings, weather deterioration and chemical deterioration. Make all necessary repairs before

operating.

Hydraulic System Test Ports

The test ports are used to test pressure in the hydraulic circuits. Contact your local Toro distributor for assistance.

Adjusting the Traction Drive for Neutra

The machine must not creep when you release the traction pedal. If it does creep, an adjustment is required.

1. Park machine on a level surface, shut the engine off and lower the cutting units to the floor. Depress only the right brake pedal and engage the parking brake.

2. Jack up the left side of the machine until the front tire is off the shop floor. Support the machine with jack stands to prevent it from falling accidentally.

   NOTE: On 4-wheel drive models, the left rear tire must also be off the shop floor or the 4-wheel drive drive shaft must be removed.

3. Under the right side of the machine, loosen the locknut on the traction adjustment cam.

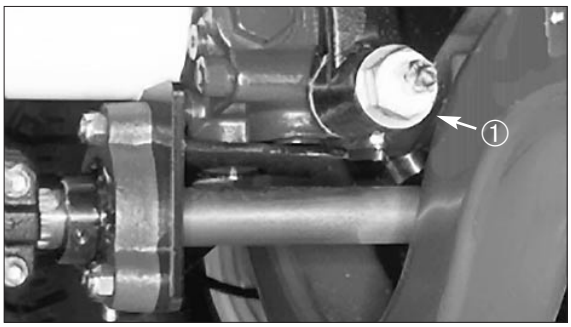

Figure 46

1. Traction adjustment cam

4. Start the engine and rotate the cam hex in either direction until the wheel ceases rotation.

5. Tighten the locknut securing adjustment.

6. Stop the engine and release the right brake. Remove the jack stands and lower the machine to the shop floor. Test drive the machine to make sure it does not creep.

Adjusting Cutting Unit Lift Rate

WARNING

The engine must be running for the final adjustment of the traction cam. To guard against possible personal injury, keep hands, feet, face and other parts of the body away from the muffler, other hot parts or the engine, and other rotating parts.

The cutting unit lift circuit is equipped with (3) adjustable valves used to ensure the cutting units do not raise too quickly and bang against lift stops. Adjust cutting units as follows:

Center Cutting Unit

1. Locate the valve behind the access panel above the operator's platform.

2. Loosen the setscrew on the valve and rotate the valve approximately 1/2 turn clockwise.

3. Verify the lift rate adjustment by raising and lowering cutting unit several times. Readjust as required.

4. After desired lift rate is attained, tighten the setscrew to lock adjustment.

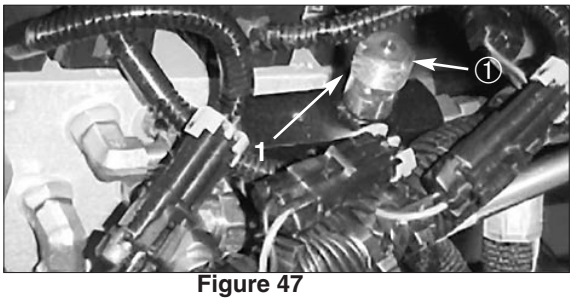

Figure 47

1. Center cutting unit adjustment valve

Outside Front Cutting Units

1. Locate the valve on the left front lift cylinder (under the footrest).
2. Loosen the setscrew on the valve. Rotate the valve 1/2 turn clockwise.
3. Verify lift rate adjustment by raising and lowering the cutting units several times. Readjust as required.
4. After you attain the desired lift rate, tighten the setscrew to lock adjustment.

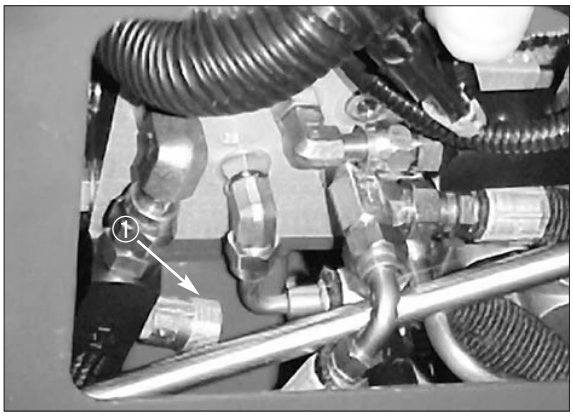

Figure 48

1. Outside front cutting units adjustment valve

Rear Cutting Units

1. Raise the hood and locate the valve on the left rear side of the machine.
2. Loosen the setscrew on the valve and rotate the valve approximately 1/2 turn clockwise.
3. Verify lift rate adjustment by raising and lowering the cutting units several times. Readjust as required.

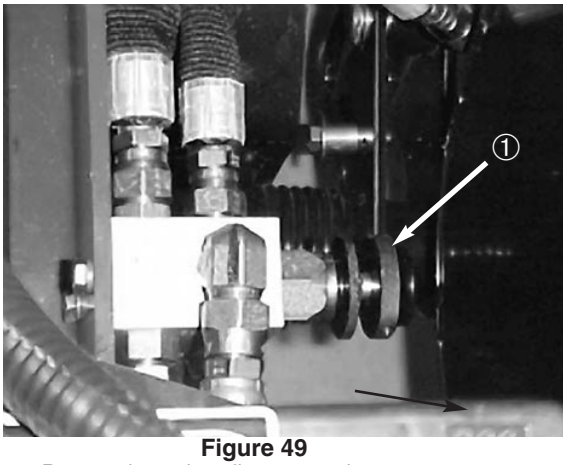

Figure 49

1. Rear cutting units adjustment valve

4. After you attain the desired lift rate, tighten the setscrew to lock adjustment.

Checking and Adjusting Traction Linkage

Due to normal wear in the control linkage and transmission, an increased amount of force may be required to return the transmissions to neutral. Periodically check the machine.

To Check Traction Linkage:

1 . On a large, flat open area, drive the machine at full throttle and full traction speed.
2. Remove your foot from the traction pedal and measure the distance required for the machine to come to a stop.
3. If the distance required to stop is greater than 5.5 meters, an adjustment to the traction linkage is required. Proceed to the next step.

To Adjust the Traction Linkage

1. Park the machine on a level surface, lower the cutting units to the floor and shut off the engine.
2. Connect the brake pedals together with the locking pin, push both pedals down and pull the parking brake latch out.
3. Loosen the outer nut securing the eye bolt to the spring anchor plate.

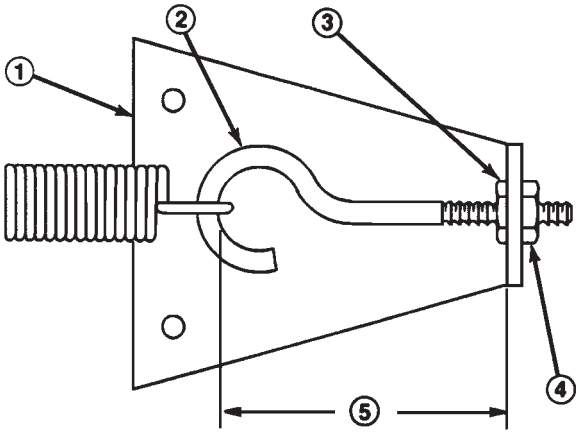

Figure 50

1. Spring Anchor Plate
2. Eye bolt
3. Inner locknut
4. Outer locknut
5. Shorten the distance to decrease the time required to stop the machine

4. Rotate, clockwise, until distance between inside of the eyebolt loop and the inside of the spring anchor plate is shortened 3 mm, as shown in figure 50. Tighten the nut.

5. Operate the machine and check stopping distance. Repeat the procedure if required.

   Note: Shortening the distance between inside of eye bolt loop and the inside of the spring anchor plate increases the pedal force on the traction pedal. Therefore, do not over adjust.

Adjusting Service Brakes

CAUTION

Before servicing or making adjustments to the machine, stop the engine and remove the key from the switch.

Adjust the service brakes when there is more than 2.5 cm of "free travel" of the brake pedal, or when the brakes do not work effectively. Free travel is the distance the brake pedal moves before braking resistance is felt.

1. Disengage the locking pin from the brake pedals so both pedals work independently of each other.

2. To reduce free travel of brake pedals, tighten the brakes—loosen the front nut on the threaded end of the brake cable. Then tighten the rear nut to move the cable backward until the brake pedals have 1.25 cm to 2.5 cm of free travel. Tighten front nuts after brakes are adjusted correctly.



Figure 51

1. Brake cables

Changing Transmission Fluid

CAUTION

Before servicing or making adjustments to the machine, stop the engine and remove the key from the switch.

Change the transmission fluid after every 800 hours of operation, in normal conditions.

1. Position machine on a level surface, lower the cutting units, stop the engine, engage the parking brakes and remove the key from the ignition switch.

2. Clean the area around the suction line on the bottom of the transmission. Place the drain pan under line.

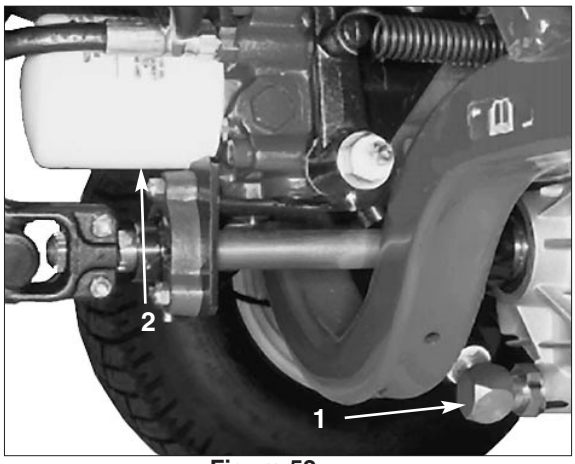

Figure 52

1. Transmission suction line
2. Transmission oil filter

3. Remove the line from the transmission allowing fluid to drain into the drain pan.

4. Reinstall the suction line to the transmission.

5. Fill with oil; refer to *Check Transmission Fluid*.

6. Before starting the engine after changing transmission fluid, disconnect the run solenoid on the engine and crank the engine several times for 15 seconds. This allows the charge pump to fill the transmission with fluid before the engine is started.

Replacing the Transmission Filter

Change the transmission filter after **the first 10 hours** of operation and every 800 hours thereafter. Only the Toro replacement filter (Part No.75-1330) can be used in the hydraulic system.

IMPORTANT. Use of any other filter may void the warranty on some components.

1. Position the machine on a level surface, lower the cutting units, stop the engine, engage the parking brakes and remove the key from the ignition switch.

2. Clean the area around the filter mounting area. Place the drain pan under the filter and remove the filter.

3. Lubricate the new filter gasket and fill the filter with hydraulic oil.

4. Assure the filter-mounting area is clean. Screw the filter on until the gasket contacts the mounting plate. Then tighten the filter one half turn.

5. Start the engine and let it run for about two minutes to purge air from the system. Stop the engine and check for leaks. Check the fluid level and replenish if necessary.

Changing Rear Axle Lubricant
(Model 03551 only)

After every 800 hours of operation the oil in the rear axle must be changed.

1. Position the machine on a level surface.

2. Clean the area around the drain plugs.

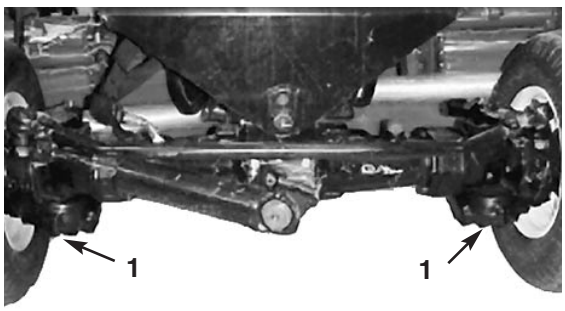

Figure 53

1. Drain Plugs

3. Remove the plugs, allowing oil to drain into the drain pans.

4. After oil is drained, apply thread-locking compound on the drain plug threads and install them in the axle.

5. Fill the axle with lubricant; refer to *Check Rear Axle Lubricant.*

Rear Wheel Toe-In

After every 800 operating hours or annually, check rear wheel toe-in.

1. Measure center-to-center distance (at axle

height) at the front and rear of the steering tires. Front measurement must be 3mm less than the rear measurement.

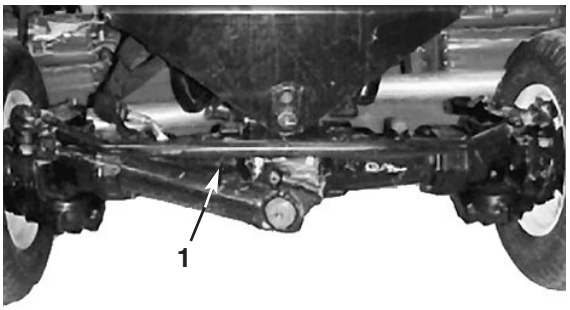

Figure 54

1. Tie rod

2. To adjust, loosen the clamps at both ends of the tie rod.

3. Rotate tie rod(s) to move the front of the tire inward or outward.

4. Tighten the tie rod clamps when adjustment is correct.

Battery Care

IMPORTANT: Before welding on the machine, disconnect both cables from the battery, disconnect both wire harness plugs from the electronic control unit and the terminal connector from the alternator to prevent damage to the electrical system.

CAUTION

Wear safety goggles and rubber gloves when working with electrolyte. Charge the battery in a well ventilated so gases produced while charging can dissipate. Since the gases are explosive, keep open flames and electrical sparks away from the battery; do not smoke. Nausea may result if the gases are inhaled. Unplug the charger from the electrical outlet before connecting to, or disconnecting charger leads from battery posts.

Note: Check battery condition weekly or after every 50 hours of operation. Keep terminals and entire battery case clean because a dirty battery will discharge slowly. To clean the battery, wash the entire case with solution of baking soda and water. Rinse with clear water. Coat the battery posts and cable connectors with Grafo 112X (skin-over) grease (Toro Part No. 505-47) or petroleum jelly to prevent corrosion.

Fuses (Fig. 55)

There are four fuses in the machines electrical system. They are located below control panel.

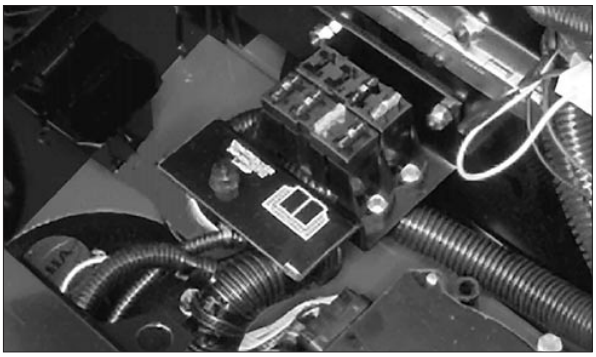

Figure 55

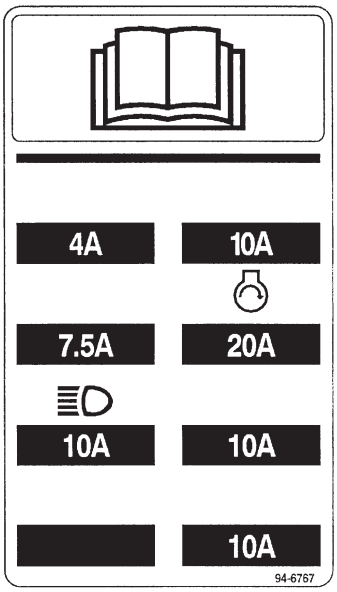

Cutting Unit Maintenance

Backlapping

DANGER

POTENTIAL HAZARD
Reels may stall while backlapping.

WHAT CAN HAPPEN
Reels may restart. Contact with rotating reels will cause serious injury.

HOW TO AVOID THE HAZARD
- Do not attempt to restart reels by hand or touch reels while backlapping.
- Stop the engine and turn the height-of-cut knob one position toward “1”.

Note: When backlapping, the front units all operate together, and the rear units operate together.

1. Position the machine on a level surface, lower the cutting units, stop the engine, engage the parking brake, and move the Enable/Disable switch to the Disable position.

2. Unlock and raise the seat to expose controls.

3. Locate the reel speed selector knobs and backlap knobs (Fig. 56). Rotate the desired backlap knob(s) to the backlap position and the desired reel speed selector knob(s) to position “1.”

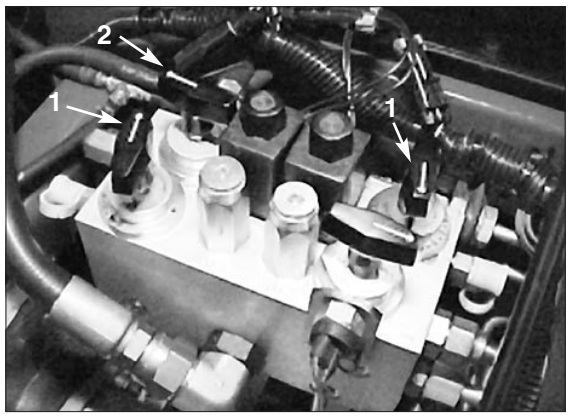

Figure 56
1. Reel speed selector knobs
2. Backlap knobs

Note: Backlapping speed may be increased by moving the reel speed selector knob toward "13." Each position will increase speed approximately 100 rpm. After changing selector, wait 30 seconds for the system to stabilize at the new speed.

4. Make initial reel to bedknife adjustments appropriate for backlapping on all cutting units that are to be backlapped.

5. Start the engine and run it at **idle speed.**

DANGER

POTENTIAL HAZARD
Changing engine speed while backlapping may cause reels to stall.

WHAT CAN HAPPEN
Reels may restart. Contact with rotating reels will cause serious injury.

HOW TO AVOID THE HAZARD
- Never place hands or feet in reel area while engine is running.
- Never change engine speed while backlapping.
- Only backlap at idle engine speed.
- Never attempt to turn reels by hand or foot while engine is running.

6. Select either front, rear, or both backlap knobs to determine which reels will be backlapped.

7 Move the Enable/Disable switch to the Enable position. Move the Lower Mow/Lift control forward to start backlapping operation on designated reels.

8. Apply lapping compound with a long-handle brush (Toro Part No. 29-9100). Never use a short-handled brush (Fig. 57).

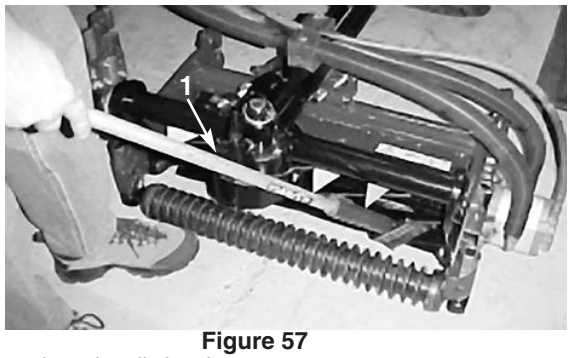

Figure 57
1. Long handle brush

9. If reels stall or become erratic while backlapping, stop backlapping by moving the Lower Mow/Lift control lever rearward. Once the reels have stopped, move the desired reel speed selector knob(s) one position closer to "13." Resume backlapping by moving the Lower Mow/Lift control lever forward.

10. To make an adjustment to the cutting units while backlapping, turn reels OFF by moving the Lower Mow/Raise lever rearward; move the Enable/Disable switch to Disable and turn the engine OFF. After adjustments have been completed, repeat steps 5–9.

11. Backlap until the reels can cut paper.

12. When the cutting unit is adequately sharpened, a burr will form on the front edge of the knife. Using a file, carefully remove the burr without dulling the cutting edge (Fig. 58).

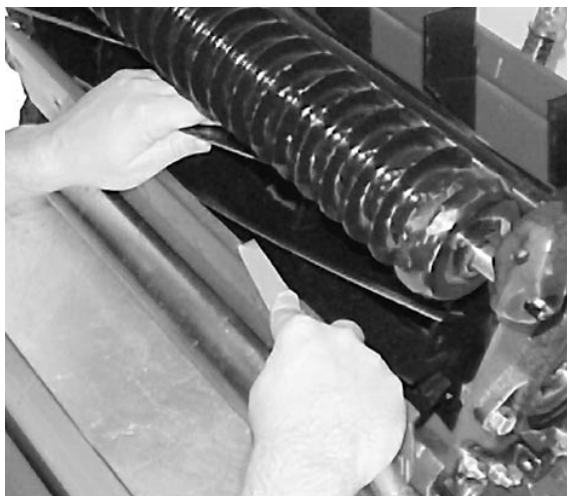

Figure 58

13. Repeat procedure for all cutting units to be backlapped.

When backlap operation has been completed, return the backlap knobs to the forward flow position, lower the seat and wash all lapping compound off of the cutting units. Adjust the cutting unit reel to the bedknife as needed.

Note: If the backlap knobs are not returned to the forward flow position after backlapping, the cutting units will not raise or function properly.

Preparation for Seasonal Storage

Traction Unit

1. Thoroughly clean the traction unit, cutting units and the engine.
2. Check the tire pressure. Inflate all traction unit tires to 103–138 kPA (15–20 psi).
3. Check all fasteners for looseness; tighten as necessary.
4. Grease or oil all grease fittings and pivot points. Wipe up any excess lubricant.
5. Lightly sand and use touch-up paint on painted areas that are scratched, chipped, or rusted. Repair any dents in the metal body.
6. Service the battery and cables as follows:
   a. Remove the battery terminals from the battery posts.
   b. Clean the battery, terminals, and posts with a wire brush and baking soda solution.
   c. Coat the cable terminals and battery posts with Grafo 112X skin-over grease (Toro Part No. 50547) or petroleum jelly to prevent corrosion.
   d. Slowly recharge the battery every 60 days for 24 hours to prevent lead sulfation of the battery.

Engine

1. Drain the engine oil from the oil pan and replace the drain plug.
2. Remove and discard the oil filter. Install a new oil filter.
3. Refill the oil pan with SAE10W30 motor oil.
4. Start the engine and run at idle speed for approximately two minutes.
5. Stop the engine.
6. Thoroughly drain all fuel from the fuel tank, lines and the fuel filter/water separator assembly.
7. Flush the fuel tank with fresh, clean diesel fuel.
8. Resecure all fuel system fittings.
9. Thoroughly clean and service the air cleaner assembly.
10. Seal the air cleaner inlet and the exhaust outlet with weatherproof tape.
11. Check anti-freeze protection and add as needed for expected minimum temperature in your area.

Identification and Ordering

Model and Serial Number

The model and serial number is on a plate that is mounted on the left side of footrest. Use model and serial number in all correspondence and when ordering parts.

To order replacement parts from an authorized TORO Distributor, supply the following information:

1. Model and serial numbers of the machine.

2. Part number, description and quantity of parts desired.

Note: If using a parts catalog, do not order by reference number; use the part number instead.


TORO®