Form No. 3438-717 Rev C

TORO®

Count on it.

Parts Catalog

# TRX-16

## Trencher

**Model No. 22972—Serial No. 404800000 and Up**

Register at www.Toro.com.
Original Instructions (EN)

CE

*3438-717* C

# Ordering Replacement Parts

To order replacement parts, please supply the part number, the quantity, and the description of each part desired.

### Understanding Reference Numbers

Each identified part in an illustration has a reference number. The reference number for a part also appears in the parts list, along with other information about the part.

This catalog uses two special reference number formats, one to indicate parts in a service assembly and another to indicate the quantity of a given part in an illustration.

### Service Assembly Reference Numbers

Parts in service assemblies have reference numbers in the form a:b. The a represents the reference number of the entire service assembly and the b represents a sequential number unique to each part within the service assembly.

For example, a wheel assembly might be identified by reference number 6, the tire by 6:1, the valve by 6:2, and the wheel by 6:3. When you order the assembly identified by reference number 6, you receive all parts identified by reference numbers 6:1,6:2, and 6:3. However, you may also order any part individually. Reference numbers of this type appear in illustration and in parts lists.

### Reference Numbers Indicating Quantity

In an illustration, if a reference number indicates more than one part, the reference number has the form nX y. The n represents the quantity of the part, the X is the multiplication symbol, and the y represents the reference number.

For example, in an illustration, the reference number 2X 37 means that two of the parts identified by reference number 37 are indicated.

# Contents

Main Frame Assembly . . . . . 4
Tower and Fuel Tank Assembly . . . . . 6
Track Drive Assembly . . . . . 8
Hydraulic Pump Assembly No. 117-6409 . . . . . 10
Hydraulic Pump Assembly No. 117-6410 . . . . . 12
Hydraulic Motor Assembly No. 104-8470 . . . . . 14
Parking Brake Assembly . . . . . 16
Engine Assembly . . . . . 18
Gear Pump, Idler Arm and Pulley Assembly . . . . . 20
Gear Pump Assembly No. 114-3072 . . . . . 22
Hydraulic Control Assembly . . . . . 24
2-Spool Valve Assembly No. 115-4062 . . . . . 26
Hydraulic Cylinder Assembly No. 121-1955 . . . . . 28
Hydraulic Motor Assembly No. 131-0652 . . . . . 30
Hydraulic Oil Cooler Assembly . . . . . 32
Trencher Head and Auger Assembly . . . . . 34
Traction Control Assembly . . . . . 36
Engine Wire Harness Assembly . . . . . 38
Attachments and Accessories . . . . . 40

**© 2021—The Toro® Company**
**8111 Lyndale Avenue South**
**Bloomington, MN 55420**



**Contact us at www.Toro.com.**
**Printed in the USA.**
**All Rights Reserved**

# Main Frame Assembly

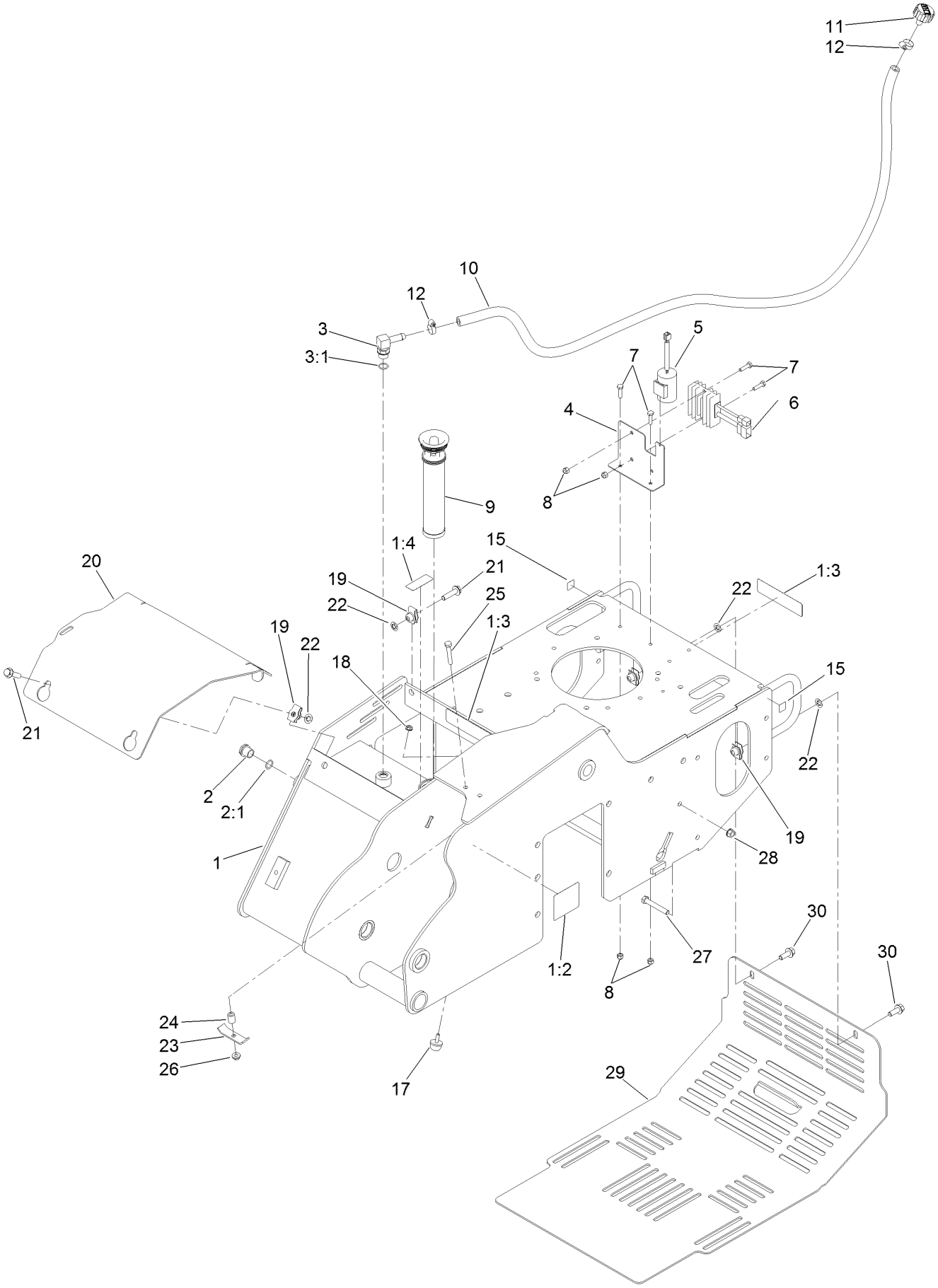

# Main Frame Assembly (continued)

| Ref. | Part Number | Qty. | Description |
|---|---|---|---|
| 1 | 127-9602 | 1 | Main Frame ASM |
| 1:2 | 100-4650 | 1 | Decal-Warning |
| 1:3 | 93-7814 | 2 | Decal-Danger |
| 1:4 | 93-6686 | 1 | Decal-Oil, HYD |
| 2 | 114-3075 | 1 | Sight Glass ASM |
| 2:1 | 237-79 | 1 | O-Ring |
| 3 | 354-120 | 1 | Fitting-Elbow, 90 |
| 3:1 | 237-79 | 1 | O-Ring |
| 4 | 117-6399-01 | 1 | Bracket-Electrical |
| 5 | 117-6397 | 1 | Condenser (F/W Engine) |
| 6 | 117-6398 | 1 | Regulator (F/W Engine) |
| 7 | 321-6 | 4 | Screw-HH |
| 8 | 3296-42 | 4 | Nut-Lock, NI |
| 9 | 114-3039 | 1 | Filter-Tank, In |
| 10 | 114-3042 | 1 | Hose-Breather |
| 11 | 68-6150 | 1 | Breather |
| 12 | 2412-36 | 2 | Clamp-Hose |
| 15 | 93-9084 | 2 | Decal-Point, Lift |
| 17 | 1-523420 | 1 | Bumper |
| 18 | 32128-33 | 1 | Nut-HF |
| 19 | 140-1146 | 5 | Nut-Clip, U |
| 20 | 119-4566-03 | 1 | Plate-Cover, Front |
| 21 | 33105-040 | 3 | Screw-HHF |
| 22 | 140-1144 | 5 | Nut-Push |
| 23 | 100-4860 | 1 | Bracket-Clamp |
| 24 | 93-5023 | 1 | Spacer |
| 25 | 322-10 | 1 | Screw-HH |
| 26 | 32128-20 | 1 | Nut-HF |
| 27 | 323-12 | 1 | Screw-HH |
| 28 | 32128-40 | 2 | Nut-Flange |
| 29 | 115-6503-01 | 1 | Cover-Rear |
| 30 | 108-1531 | 2 | Screw-HHF |

# Tower and Fuel Tank Assembly

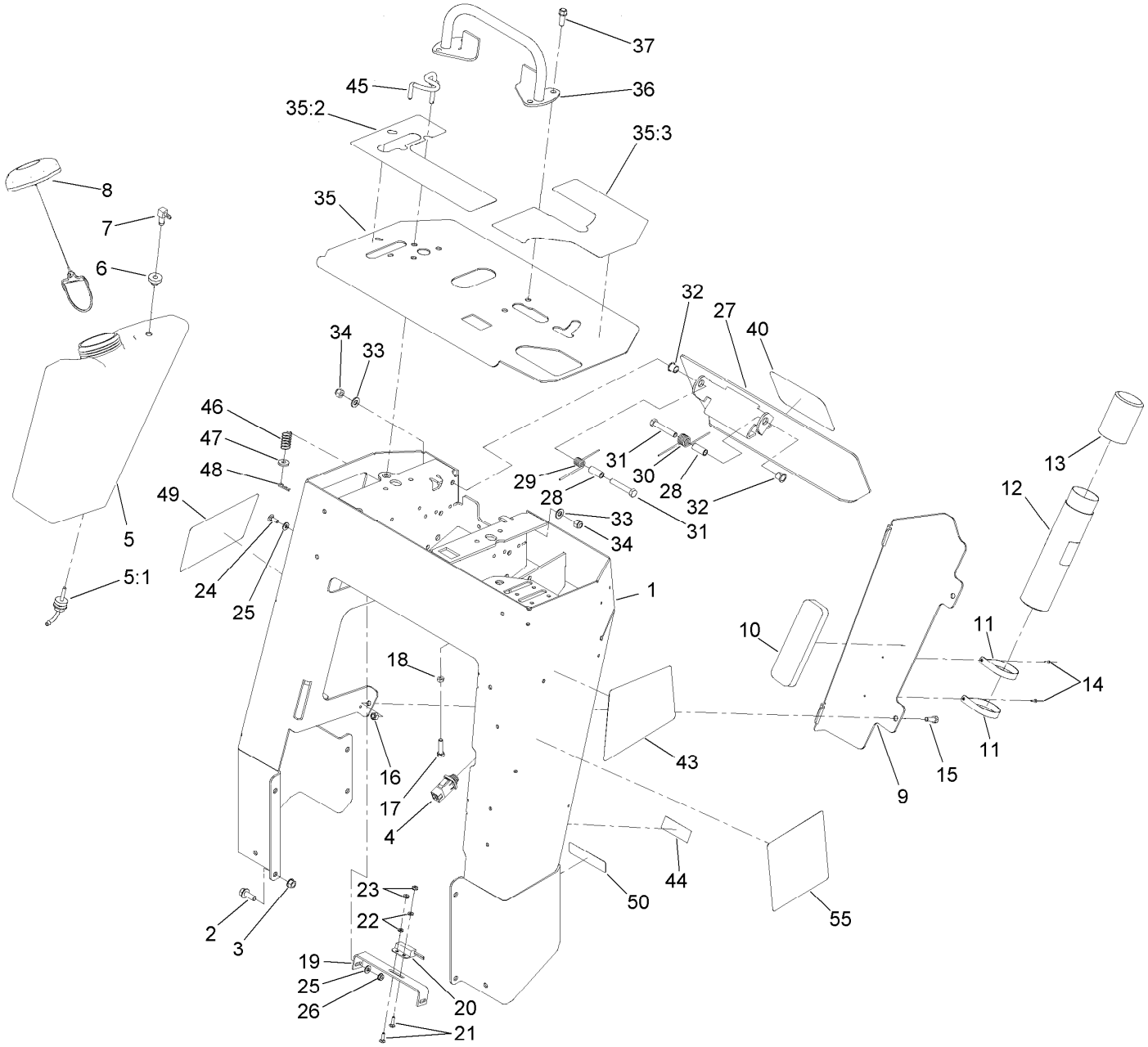

# Tower and Fuel Tank Assembly (continued)

| Ref. | Part Number | Qty. | Description |
|---|---|---|---|
| 1 | 117-6419-01 | 1 | Tower |
| 2 | 3234-11 | 8 | Screw-HHF |
| 3 | 32128-40 | 8 | Nut-Flange |
| 4 | 100-1268 | 1 | Switch-Plunger |
| 5 | 120-7357 | 1 | Tank-Fuel |
| 5:1 | 103-2605 | 1 | Fitting-Fuel, Bulkhead |
| 6 | 46-6560 | 1 | Bushing |
| 7 | 104-5228 | 1 | Fitting-Elbow, 90 DEG |
| 8 | 137-4119 | 1 | Cap-Fuel, Ratcheting |
| 9 | 114-3065-01 | 1 | Bracket-Cover, Tank |
| 10 | 107-7507 | 1 | Pad-Foam |
| 11 | 2412-120 | 2 | Clamp-R |
| 12 | 104-7050 | 1 | Tube-Manual |
| 13 | 104-7048 | 1 | Cap-Housing |
| 14 | 3269-17 | 2 | Rivet-Pop |
| 15 | 322-5 | 2 | Screw-HH |
| 16 | 3296-29 | 2 | Nut-Lock, NI |
| 17 | 3210-7 | 1 | Screw-HH |
| 18 | 3220-2 | 1 | Nut-Jam |
| 19 | 100-1263 | 1 | Plate-Switch |
| 20 | 100-1270 | 1 | Switch-Proximity |
| 21 | 3229-20 | 2 | Screw-CARR |
| 22 | 3256-51 | 2 | Washer-Flat |
| 23 | 32149-7 | 2 | Nut-Keps |
| 24 | 3229-1 | 2 | Screw-CARR |
| 25 | 3256-22 | 4 | Washer-Flat |
| 26 | 32149-2 | 2 | Nut-Keps |
| 27 | 114-3012-03 | 1 | Plate-Reverse |
| 28 | 114-1337 | 2 | Spacer-Spring |
| 29 | 98-8425 | 1 | Spring-Torsion, LH |
| 30 | 98-8424 | 1 | Spring-Torsion, RH |
| 31 | 323-11 | 2 | Screw-HH |
| 32 | 256-257 | 2 | Bushing-Nyliner |
| 33 | 3256-24 | 2 | Washer-Flat |
| 34 | 3296-39 | 2 | Nut-Lock, NI |
| 35 | 117-6389 | 1 | Panel-Control |
| 35:2 | 115-1231 | 1 | Decal-Console, RH |
| 35:3 | 115-1230 | 1 | Decal-Console, LH |
| 36 | 106-7715 | 1 | Bar-Reference |
| 37 | 95-1726 | 4 | Screw-Taptite |
| 40 | 105-1217 | 1 | Decal |
| 43 | 117-6281 | 1 | Decal-Side, LH |
| 44 | 120-7531 | 1 | Decal-Info |
| 45 | 114-8727 | 1 | Rod-Interlock |
| 46 | 85-6750 | 1 | Spring-Control |
| 47 | 88-7200 | 1 | Washer-Flat |
| 48 | 3290-307 | 1 | Pin-Cotter |
| 49 | 117-6270 | 1 | Decal-Side, RH |
| 50 | 133-8062 | 1 | Decal-Arrestor, Spark |
| 55 | 137-3873 | 1 | Decal-Service |

# Track Drive Assembly

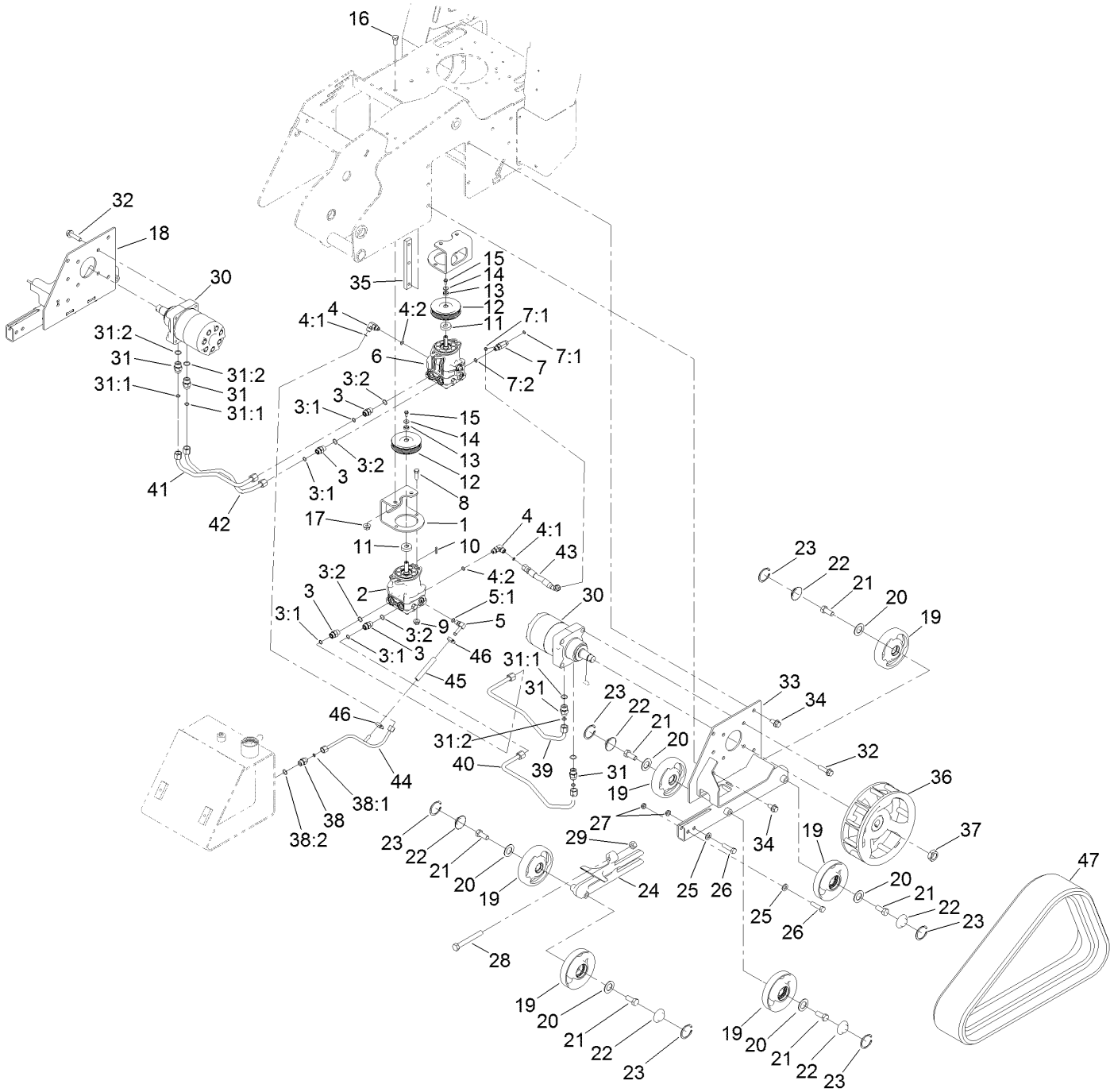

# Track Drive Assembly (continued)

| Ref. | Part Number | Qty. | Description |
|---|---|---|---|
| 1 | 115-1289-03 | 2 | Bracket-Mount, Pump |
| 2 | 117-6409 | 1 | RH HYD Pump ASM |
| 3 | 340-4 | 4 | Fitting-Straight |
| 3:1 | 237-30 | 1 | O-Ring |
| 3:2 | 237-79 | 1 | O-Ring |
| 4 | 340-77 | 2 | Fitting-Elbow, 90 DEG |
| 4:1 | 237-22 | 1 | O-Ring |
| 4:2 | 237-42 | 1 | O-Ring |
| 5 | 100-4887 | 1 | Fitting-Elbow, 90 |
| 5:1 | 237-42 | 1 | O-Ring |
| 6 | 117-6410 | 1 | LH HYD Pump ASM |
| 7 | 340-86 | 1 | Fitting-Tee |
| 7:1 | 237-22 | 2 | O-Ring |
| 7:2 | 237-42 | 1 | O-Ring |
| 8 | 324-5 | 4 | Screw-HH |
| 9 | 32128-42 | 4 | Nut-HF |
| 10 | 80-6090 | 2 | Key-Pump |
| 11 | 115-4002 | 2 | Spacer |
| 12 | 115-1298 | 2 | Sheave |
| 13 | 108-4211 | 2 | Bushing |
| 14 | 73-3580 | 2 | Washer |
| 15 | 33103-016 | 2 | Screw-HHF |
| 16 | 325-4 | 4 | Screw-HH |
| 17 | 32128-49 | 8 | Nut-HHF |
| 18 | 114-2993-03 | 1 | Frame-Track, RH |
| 19 | 138-3139 | 12 | Tensioner Wheel ASM |
| 20 | 106-7585 | 12 | Gasket-Bogie |
| 21 | 327-4 | 12 | Screw-HH |
| 22 | 106-7557 | 12 | Cap-Wheel, Bearing |

| Ref. | Part Number | Qty. | Description |
|---|---|---|---|
| 23 | 106-7595 | 12 | Ring-Snap, Internal |
| 24 | 114-3077-03 | 2 | Tensioner-Track |
| 25 | 3256-26 | 4 | Washer-Flat |
| 26 | 325-8 | 4 | Screw-HH |
| 27 | 3296-45 | 4 | Nut-Hex |
| 28 | 112-4874 | 2 | Screw-HH, TAP |
| 29 | 3217-11 | 2 | Nut-Hex |
| 30 | 104-8470 | 2 | HYD Wheel Motor ASM |
| 31 | 340-6 | 4 | Fitting-Straight |
| 31:1 | 237-30 | 1 | O-Ring |
| 31:2 | 237-80 | 1 | O-Ring |
| 32 | 3234-27 | 8 | Screw-HHF |
| 33 | 114-2992-03 | 1 | Frame-Track, LH |
| 34 | 3234-6 | 10 | Screw-HHF |
| 35 | 114-3091 | 2 | Bar-Thread |
| 36 | 117-6426-03 | 2 | Wheel-Drive |
| 37 | 106-8159 | 2 | Nut-Lock |
| 38 | 340-3 | 1 | Fitting-Straight |
| 38:1 | 237-22 | 1 | O-Ring |
| 38:2 | 237-79 | 1 | O-Ring |
| 39 | 115-1285 | 1 | Tube-HYD |
| 40 | 115-1286 | 1 | Tube-HYD |
| 41 | 115-1287 | 1 | Tube-HYD |
| 42 | 115-1288 | 1 | Tube-HYD |
| 43 | 115-1297 | 1 | Hose-HYD |
| 44 | 117-1305 | 1 | Tube-HYD |
| 45 | 115-4083 | 1 | Hose |
| 46 | 2412-36 | 2 | Clamp-Hose |
| 47 | 112-4816 | 2 | Track-Rubber |

# Hydraulic Pump Assembly No. 117-6409

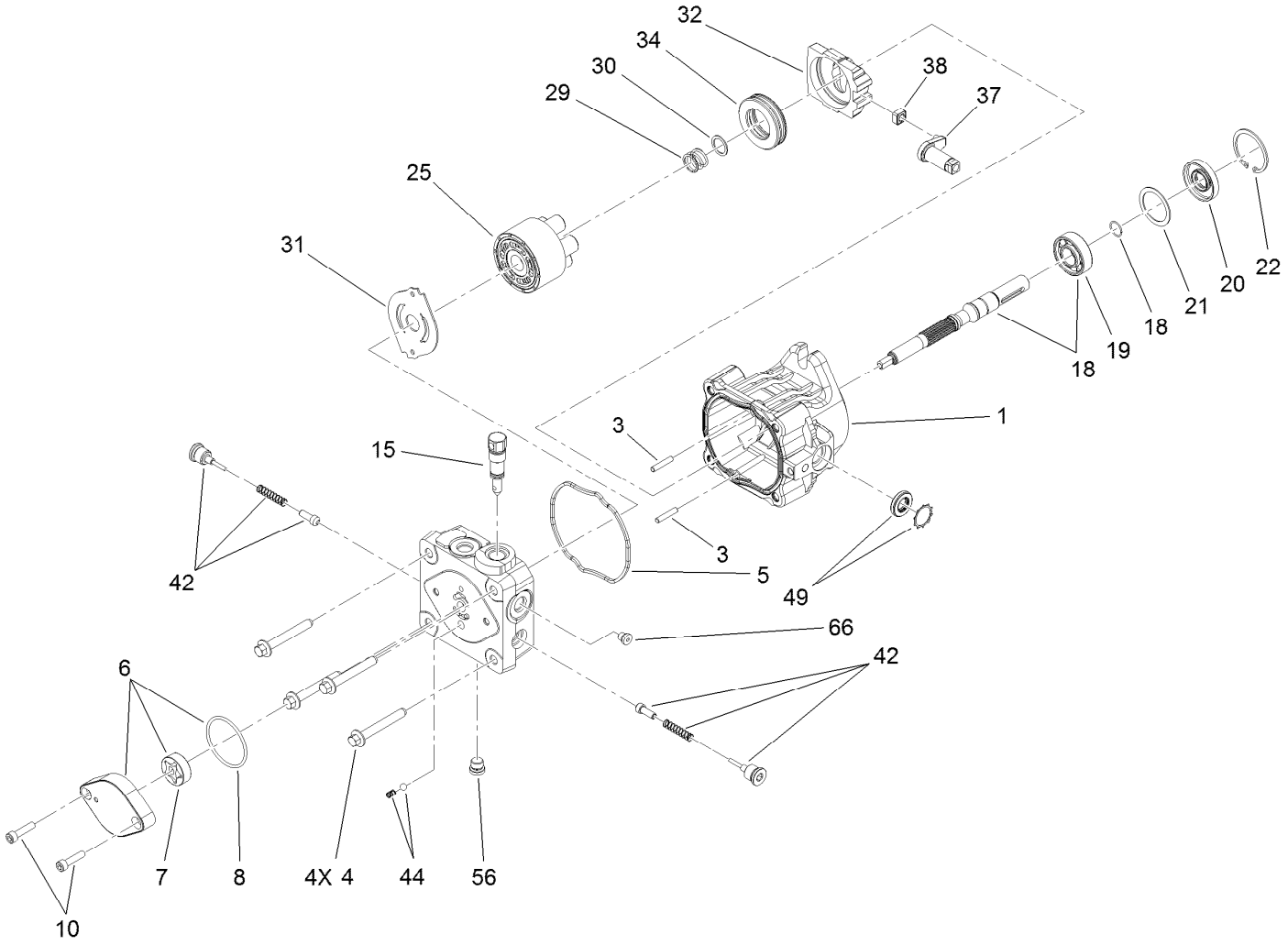

# Hydraulic Pump Assembly No. 117-6409 (continued)

| Ref. | Part Number | Qty. | Description |
|---|---|---|---|
| 1 | 115-4464 | 1 | Housing Kit |
| 3 | 106-8753 | 2 | Pin-Headless, Straight |
| 4 | 106-8754 | 4 | Bolt-HF |
| 5 | 106-8755 | 1 | O-Ring |
| 6 | 106-8756 | 1 | Charge Pump Kit |
| 7 | 104-2122 | 1 | Gerotor ASM |
| 8 | 106-8757 | 1 | O-Ring |
| 10 | 104-2111 | 2 | Capscrew |
| 15 | 106-8759 | 1 | Bypass Valve Kit |
| 18 | 103-2664 | 1 | Input Shaft Kit |
| 19 | 104-5311 | 1 | Bearing-Ball |
| 20 | 104-5310 | 1 | Seal-Lip |
| 21 | 104-5308 | 1 | Spacer |
| 22 | 104-5309 | 1 | Ring-Retaining |
| 25 | 103-2666 | 1 | Cylinder Block Kit |

| Ref. | Part Number | Qty. | Description |
|---|---|---|---|
| 29 | 94-1936 | 1 | Spring-Block |
| 30 | 94-1937 | 1 | Washer-Thrust |
| 31 | 105-6185 | 1 | Plate-Valve |
| 32 | 94-1907 | 1 | Swashplate-Variable |
| 34 | 94-6922 | 1 | Bearing-Thrust |
| 37 | 115-4458 | 1 | Arm-Trunnion, Tapered Square |
| 38 | 94-1910 | 1 | Guide-Slot |
| 42 | 98-3252 | 2 | Valve-Check (W/Poppet) |
| 44 | 106-8760 | 1 | Charge Relief Valve Kit |
| 49 | 114-8155 | 1 | Trunnion Seal Kit |
| 56 | 106-8762 | 1 | Plug-HSH |
| 66 | 106-8763 | 1 | Plug-HSH |
| 99 | 105-6184 | 1 | Seal Overhaul Kit ● |

● Not illustrated

# Hydraulic Pump Assembly No. 117-6410

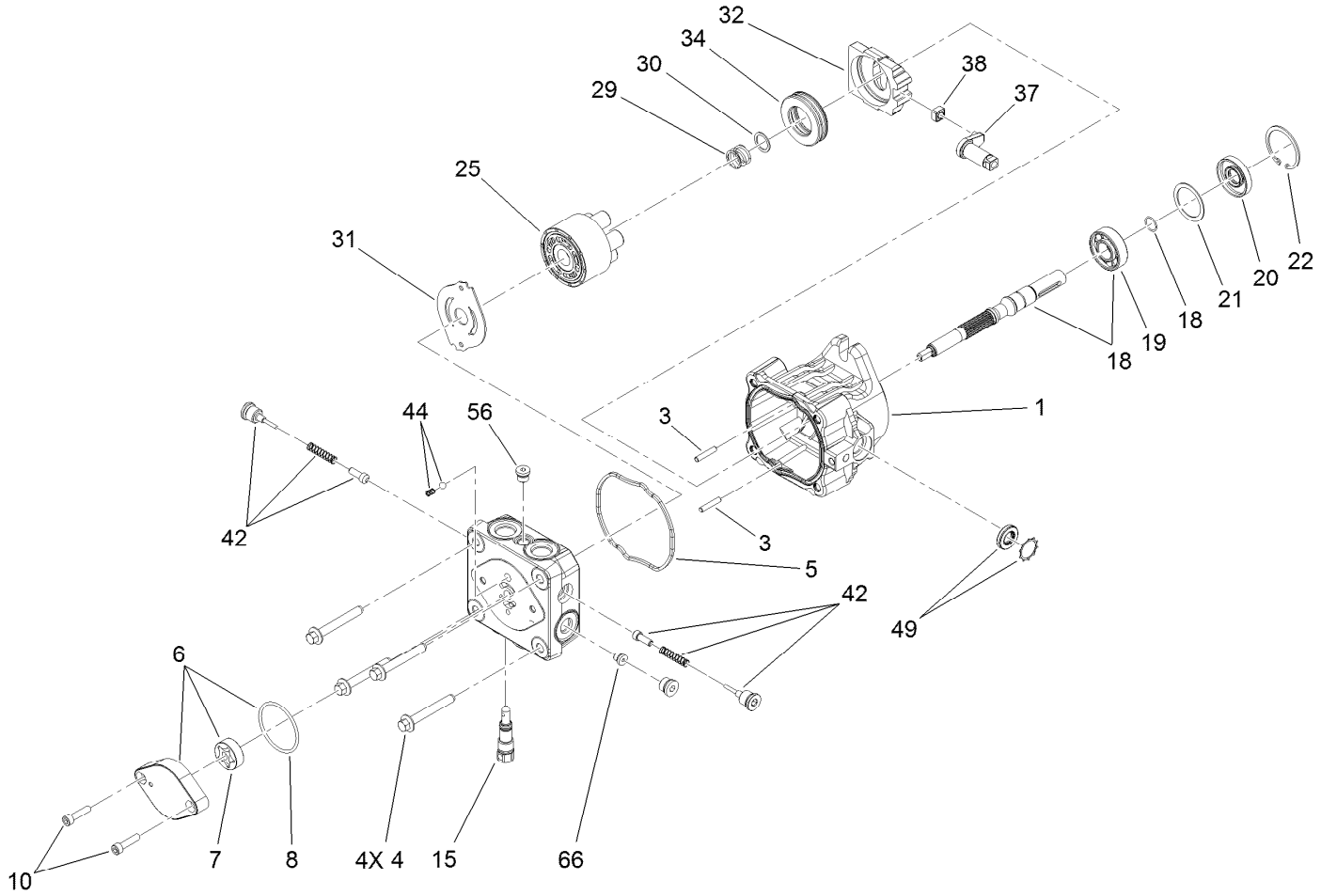

# Hydraulic Pump Assembly No. 117-6410 (continued)

| Ref. | Part Number | Qty. | Description |
|---|---|---|---|
| 1 | 115-4464 | 1 | Housing Kit |
| 3 | 106-8753 | 2 | Pin-Headless, Straight |
| 4 | 106-8754 | 4 | Bolt-HF |
| 5 | 106-8755 | 1 | O-Ring |
| 6 | 106-8756 | 1 | Charge Pump Kit |
| 7 | 104-2122 | 1 | Gerotor ASM |
| 8 | 106-8757 | 1 | O-Ring |
| 10 | 104-2111 | 2 | Capscrew |
| 15 | 106-8759 | 1 | Bypass Valve Kit |
| 18 | 103-2664 | 1 | Input Shaft Kit |
| 19 | 104-5311 | 1 | Bearing-Ball |
| 20 | 104-5310 | 1 | Seal-Lip |
| 21 | 104-5308 | 1 | Spacer |
| 22 | 104-5309 | 1 | Ring-Retaining |
| 25 | 103-2666 | 1 | Cylinder Block Kit |

| Ref. | Part Number | Qty. | Description |
|---|---|---|---|
| 29 | 94-1936 | 1 | Spring-Block |
| 30 | 94-1937 | 1 | Washer-Thrust |
| 31 | 105-6185 | 1 | Plate-Valve |
| 32 | 94-1907 | 1 | Swashplate-Variable |
| 34 | 94-6922 | 1 | Bearing-Thrust |
| 37 | 115-4458 | 1 | Arm-Trunnion, Tapered Square |
| 38 | 94-1910 | 1 | Guide-Slot |
| 42 | 98-3252 | 2 | Valve-Check (W/Poppet) |
| 44 | 106-8760 | 1 | Charge Relief Valve Kit |
| 49 | 114-8155 | 1 | Trunnion Seal Kit |
| 56 | 106-8762 | 1 | Plug-HSH |
| 66 | 106-8763 | 1 | Plug-HSH |
| 99 | 105-6184 | 1 | Seal Overhaul Kit ● |

● Not illustrated

# Hydraulic Motor Assembly No. 104-8470

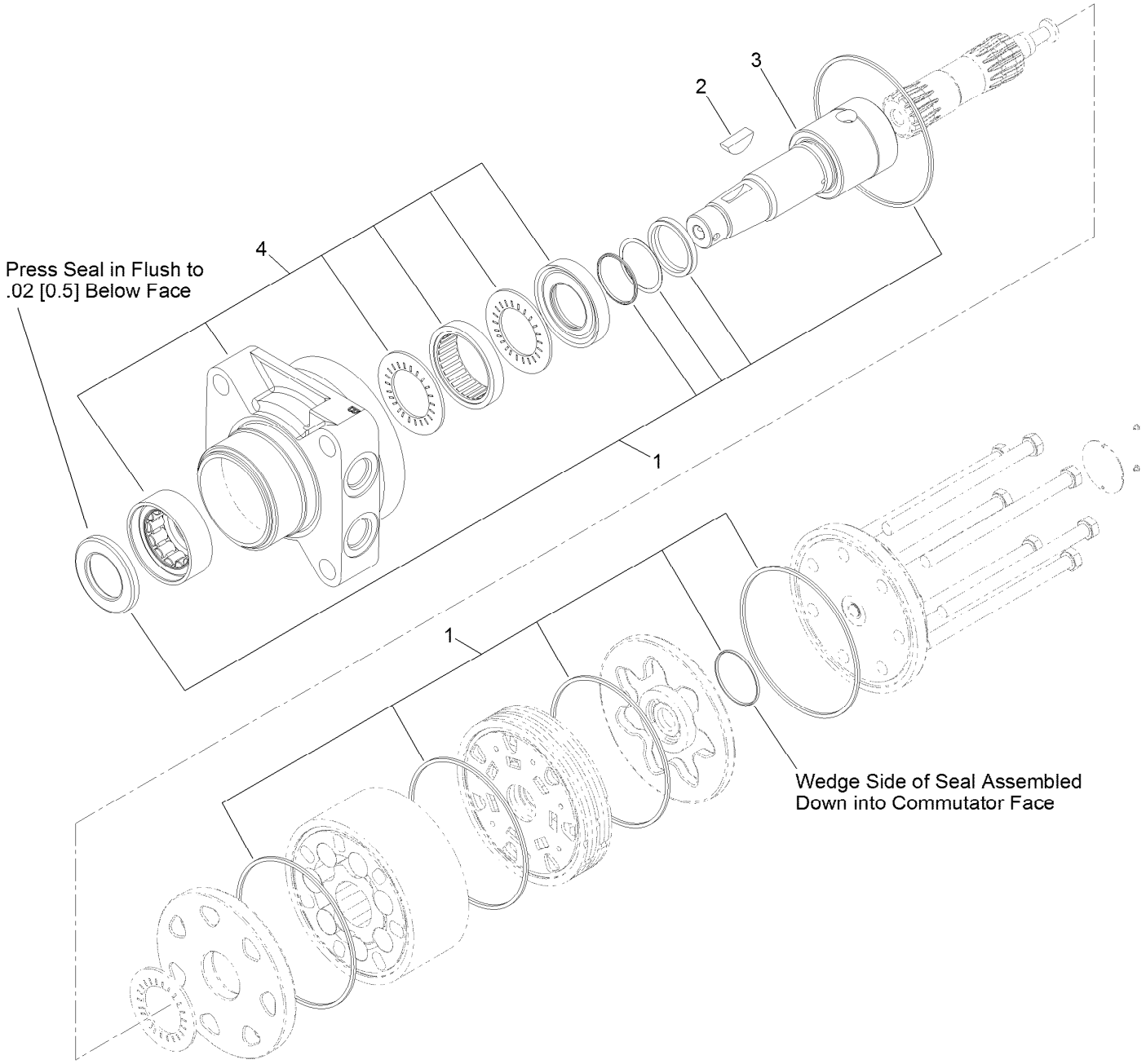

# Hydraulic Motor Assembly No. 104-8470 (continued)

| Ref. | Part Number | Qty. | Description |
|---|---|---|---|
| 1 | 115-4061 | 1 | Seal Kit |
| 2 | 3257-42 | 1 | Key-Woodruff |
| 3 | 99-3090 | 1 | Shaft-Coupling |
| 4 | 120-5395 | 1 | Motor Housing ASM |

# Parking Brake Assembly

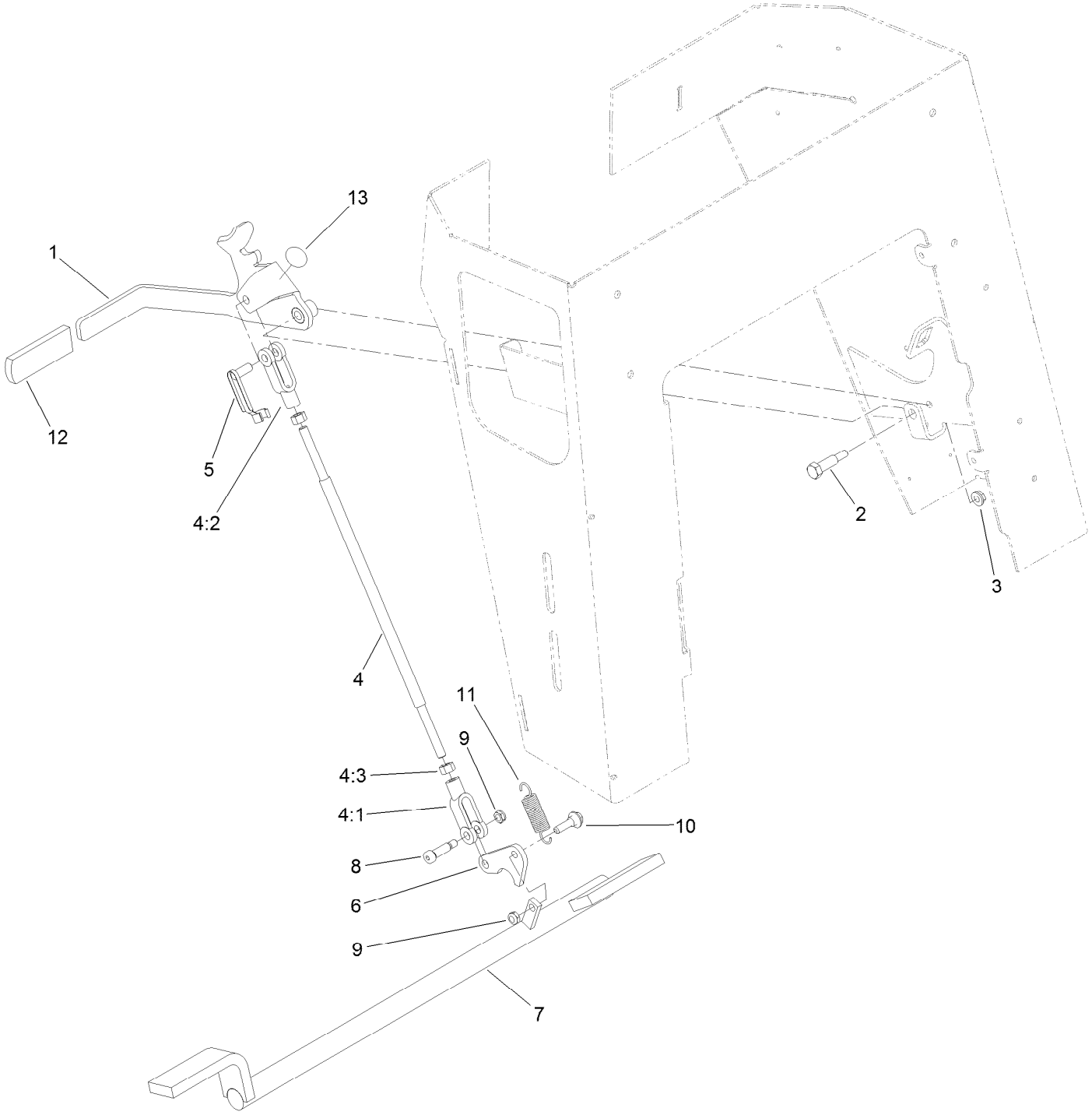

# Parking Brake Assembly (continued)

| Ref. | Part Number | Qty. | Description |
|---|---|---|---|
| 1 | 117-6421-03 | 1 | Handle-Brake |
| 2 | 7-0030 | 1 | Screw-Shoulder, HH |
| 3 | 32128-20 | 1 | Nut-HF |
| 4 | 103-4335 | 1 | Brake Rod ASM |
| 4:1 | 1-633131 | 2 | Yoke-Linkage, Brake |
| 4:2 | 103-3907 | 1 | Linkage-Handle, Brake |
| 4:3 | 3219-3 | 2 | Nut-Hex |
| 5 | 103-2399 | 1 | Pin-Spring, Clevis |
| 6 | 114-2975 | 1 | Link-Mounting |
| 7 | 114-2972-03 | 1 | Bar-Brake |
| 8 | 114-8629 | 1 | Bolt-Shoulder |
| 9 | 3296-47 | 2 | Nut-Lock,NI |
| 10 | 27-7211 | 1 | Screw-Shoulder |
| 11 | 67-1450 | 1 | Spring-Idler |
| 12 | 62-9130 | 1 | Grip-Handle |
| 13 | 107-8495 | 1 | Decal-Brake, Parking |

# Engine Assembly

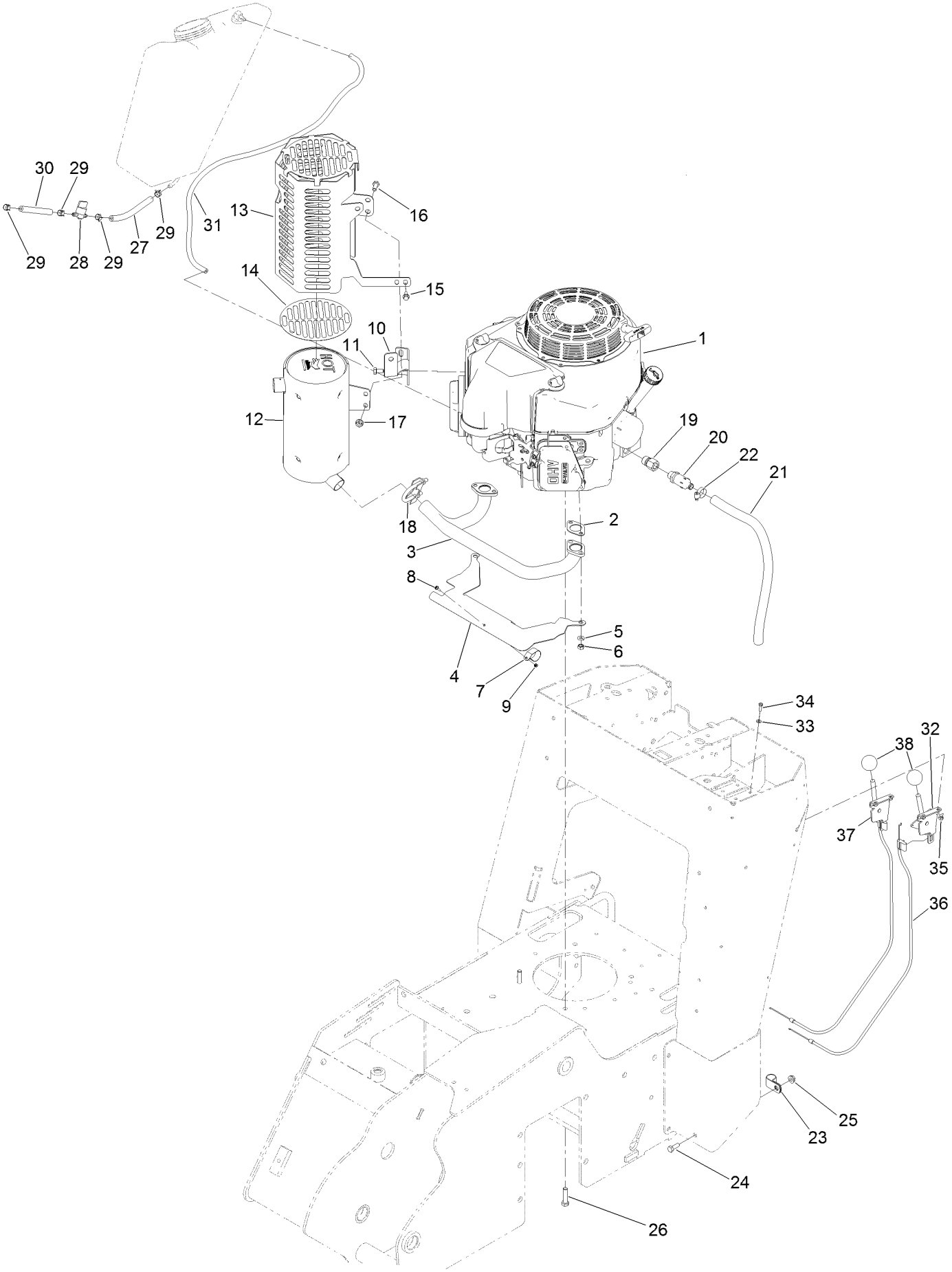

# Engine Assembly (continued)

| Ref. | Part Number | Qty. | Description |
|---|---|---|---|
| 1 | | 1 | Engine-Kawasaki, Fs481V ●■ |
| 2 | 1-653313 | 2 | Gasket-Exhaust |
| 3 | 120-7537 | 1 | Manifold-Muffler |
| 4 | 131-0662 | 1 | Plate-Shield, Heat |
| 5 | 115-6496 | 4 | Washer-Spring |
| 6 | 115-6611 | 4 | Nut-Hex |
| 7 | 115-6488 | 1 | Clamp |
| 8 | 115-6494 | 1 | Screw-Pan |
| 9 | 115-6495 | 1 | Nut-Hex |
| 10 | 131-0670-03 | 1 | Bracket-Guard, Muffler |
| 11 | 33114-016 | 2 | Screw-HH |
| 12 | 120-7536 | 1 | Muffler |
| 13 | 137-4879-03 | 1 | Guard-Muffler |
| 14 | 131-0604 | 1 | Guard-Foil |
| 15 | 33103-016 | 1 | Screw-HHF |
| 16 | 33114-020 | 3 | Screw-HH |
| 17 | 112-2844 | 3 | Nut-HF |
| 18 | 2112-11 | 1 | Clamp-Muffler |
| 19 | 103-1966 | 1 | Adapter-STR |
| 20 | 92-6877 | 1 | Valve-Drain, Oil |
| 21 | 106-5709 | 1 | Hose-Vent |
| 22 | 2412-36 | 1 | Clamp-Hose |
| 23 | 2412-81 | 1 | Clamp-R |
| 24 | 322-4 | 1 | Screw-HH |
| 25 | 32128-20 | 1 | Nut-HF |
| 26 | 323-8 | 2 | Screw-HH |
| 27 | 109-0306 | 1 | Hose-Fuel |
| 28 | 1-603770 | 1 | Valve-Fuel |
| 29 | 2412-98 | 4 | Clamp-Hose |
| 30 | 109-0295 | 1 | Hose-Fuel |
| 31 | 117-6396 | 1 | Hose-Vent, Tank |
| 32 | 110-5547 | 1 | Lever-Control |
| 33 | 3256-21 | 4 | Washer-Flat |
| 34 | 3290-134 | 4 | Screw |
| 35 | 3296-2 | 4 | Nut-Lock, NI |
| 36 | 115-1211 | 2 | Cable-Control |
| 37 | 108-9730 | 1 | Lever-Control |
| 38 | 233-42 | 2 | Knob |

● Not serviced separately

■ Obtain parts from www.kawpower.com

# Gear Pump, Idler Arm and Pulley Assembly

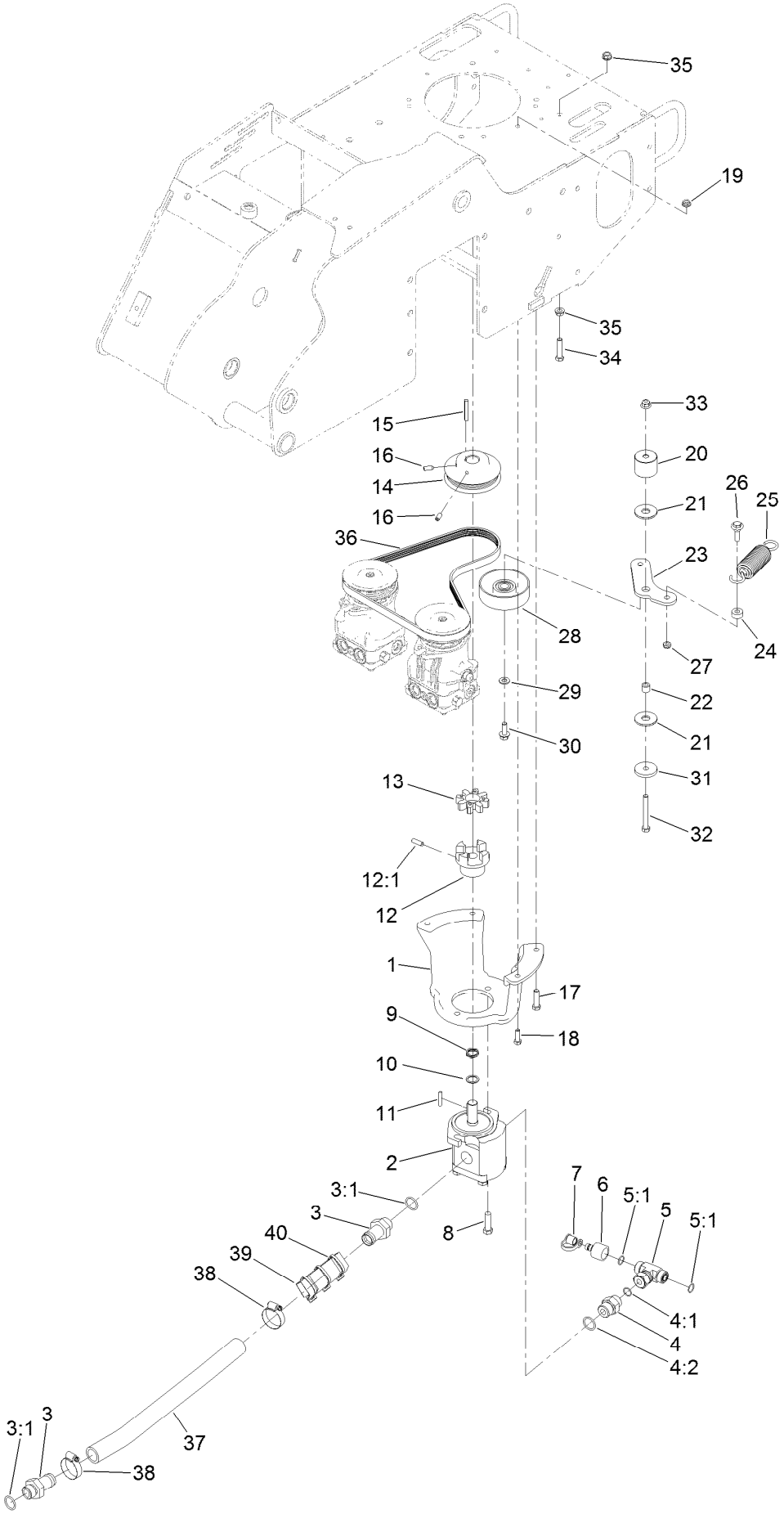

# Gear Pump, Idler Arm and Pulley Assembly (continued)

| Ref. | Part Number | Qty. | Description |
|---|---|---|---|
| 1 | 115-1480-03 | 1 | Mount-Pump |
| 2 | 114-3072 | 1 | Gear Pump ASM |
| 3 | 99-3017 | 2 | Fitting |
| 3:1 | 237-81 | 1 | O-Ring |
| 4 | 340-8 | 1 | Fitting-Straight |
| 4:1 | 237-65 | 1 | O-Ring |
| 4:2 | 237-81 | 1 | O-Ring |
| 5 | 340-167 | 1 | Fitting-Tee |
| 5:1 | 237-65 | 2 | O-Ring |
| 6 | 86-5860 | 1 | Nipple |
| 7 | 354-79 | 1 | Cap-Dust |
| 8 | 324-6 | 2 | Screw-HH |
| 9 | 121-4517 | 1 | Washer-Wave |
| 10 | 115-7210 | 1 | Washer-Thrust |
| 11 | 27-8590 | 1 | Key-Square |
| 12 | 114-2933 | 1 | Coupler-Flex |
| 12:1 | 100-7594 | 1 | Screw-Set |
| 13 | 93-8827 | 1 | Coupler-Spider |
| 14 | 114-8559-03 | 1 | Pulley-Engine |
| 15 | 608006 | 1 | Key-Square |
| 16 | 3246-6 | 2 | Screw-Set, HSH |
| 17 | 323-8 | 2 | Screw-HH |
| 18 | 322-5 | 2 | Screw-HH |
| 19 | 32128-20 | 2 | Nut-HF |
| 20 | 125-0251 | 1 | Spacer-Idler |
| 21 | 114-0463 | 2 | Washer-Friction, Composite |
| 22 | 1-413088 | 1 | Bushing-Lever, Lift |
| 23 | 125-0252 | 1 | Arm-Idler |
| 24 | 104-8426 | 1 | Spacer |
| 25 | 121-4523 | 1 | Spring-Extension |
| 26 | 614672 | 1 | Screw-Shoulder, HWH |
| 27 | 3296-59 | 1 | Nut-Lock, NI |
| 28 | 95-8802 | 1 | Pulley-Idler |
| 29 | 3256-24 | 1 | Washer-Flat |
| 30 | 3234-11 | 1 | Screw-HHF |
| 31 | 110-9981 | 1 | Washer-Plain |
| 32 | 323-14 | 1 | Screw-HH |
| 33 | 104-8301 | 1 | Nut-HF, NI |
| 34 | 323-9 | 1 | Screw-HH |
| 35 | 3290-357 | 2 | Nut-HHF, Whiz |
| 36 | 114-2991 | 1 | Belt-V |
| 37 | 114-2917 | 1 | Hose-Suction |
| 38 | 2412-111 | 2 | Clamp-Hose, W/Liner |
| 39 | AU112950 | 2 | Protector-Hose |
| 40 | 3290-378 | 3 | Tie-Cable |

# Gear Pump Assembly No. 114-3072

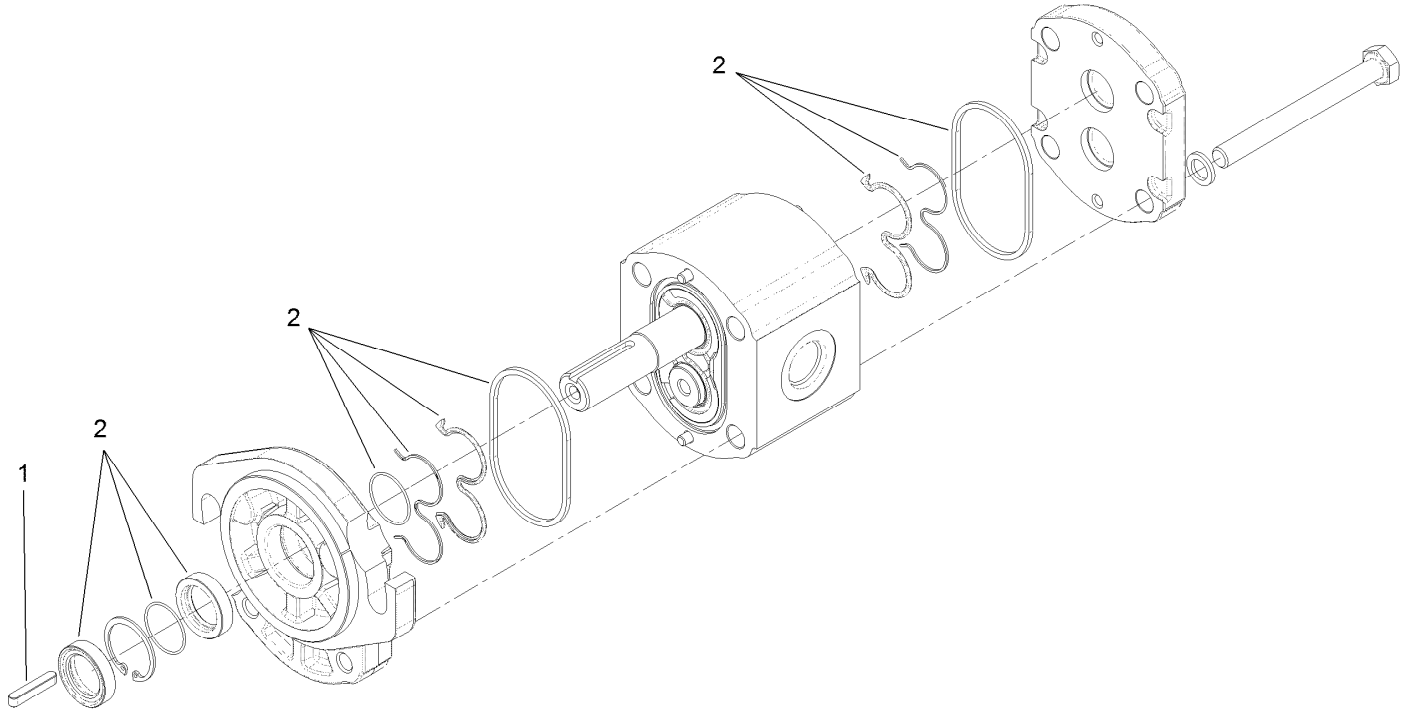

# Gear Pump Assembly No. 114-3072 (continued)

| *Ref.* | *Part Number* | *Qty.* | *Description* |
|---|---|---|---|
| 1 | 104-5839 | 1 | Key-Square |
| 2 | 115-1265 | 1 | Seal Kit |

# Hydraulic Control Assembly

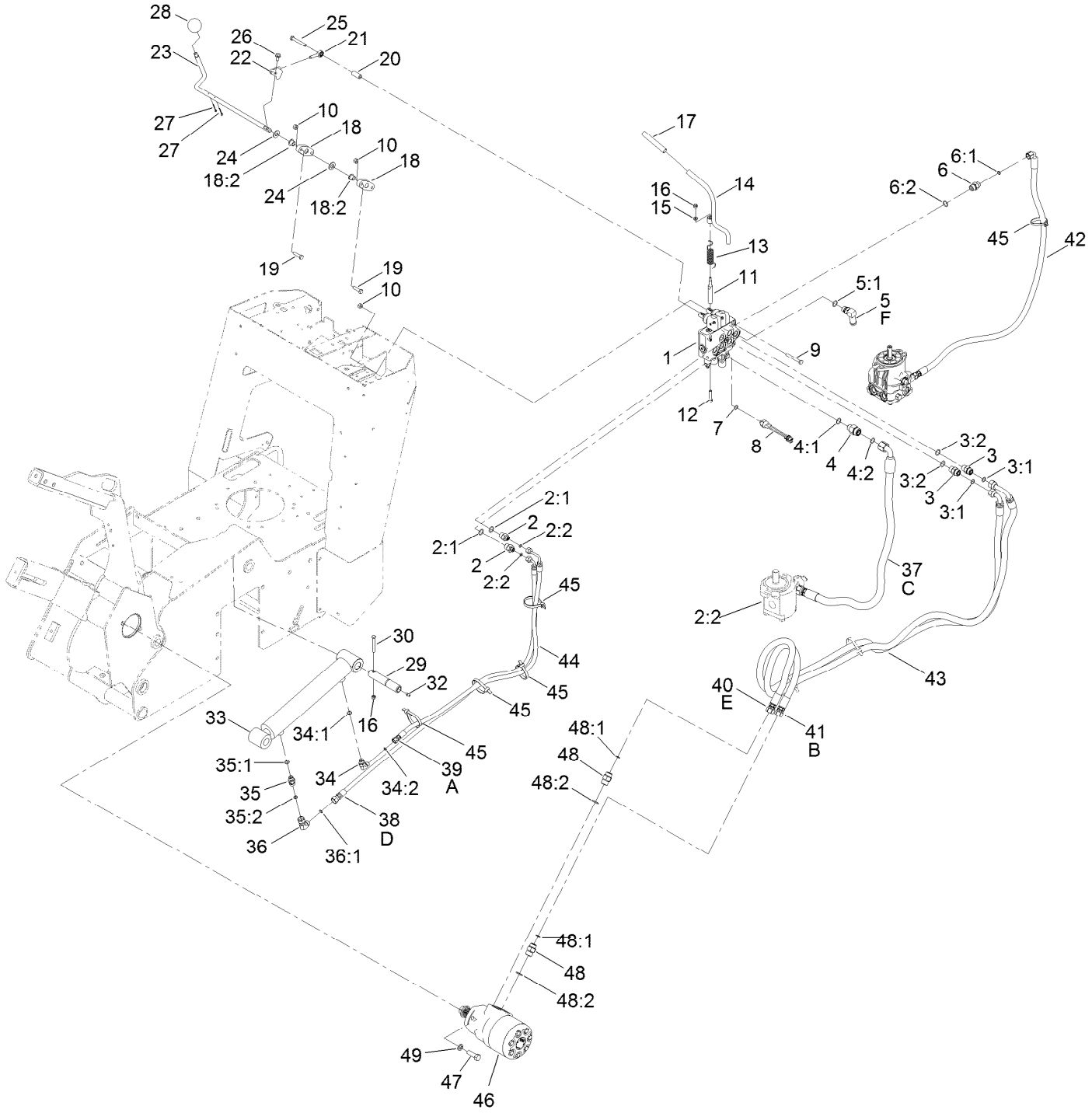

# Hydraulic Control Assembly (continued)

| Ref. | Part Number | Qty. | Description |
|---|---|---|---|
| 1 | 115-4062 | 1 | HYD Valve ASM |
| 2 | 340-133 | 2 | Fitting-STR |
| 2:1 | 237-79 | 1 | O-Ring |
| 2:2 | 237-21 | 1 | O-Ring |
| 3 | 340-4 | 2 | Fitting-Straight |
| 3:1 | 237-30 | 1 | O-Ring |
| 3:2 | 237-79 | 1 | O-Ring |
| 4 | 340-155 | 1 | Fitting-Straight |
| 4:1 | 237-79 | 1 | O-Ring |
| 4:2 | 237-151 | 1 | O-Ring |
| 5 | 353-954 | 1 | Fitting-Elbow, 90 |
| 5:1 | 237-79 | 1 | O-Ring |
| 6 | 340-3 | 1 | Fitting-Straight |
| 6:1 | 237-22 | 1 | O-Ring |
| 6:2 | 237-79 | 1 | O-Ring |
| 7 | 237-42 | 1 | O-Ring |
| 8 | 72-4310 | 1 | Switch-Ball |
| 9 | 322-12 | 3 | Screw-HH |
| 10 | 3296-29 | 7 | Nut-Lock, NI |
| 11 | 104-2827 | 1 | Spacer-Hiflo |
| 12 | 33114-035 | 1 | Screw-HH |
| 13 | 112-2738 | 1 | Spring-Torsion |
| 14 | 112-2739 | 1 | Lever-Auxiliary |
| 15 | 3256-16 | 1 | Washer-Flat |
| 16 | 3296-42 | 2 | Nut-Lock, NI |
| 17 | 112-2605 | 1 | Grip-Rubber |
| 18 | 138-3142 | 2 | Bushing ASM |
| 18:2 | 125-5239 | 1 | Bushing-Flange |
| 19 | 322-6 | 4 | Screw-HH |
| 20 | 103-0384 | 1 | Spacer |
| 21 | 115-1273 | 1 | Bearing-Rod End |
| 22 | 112-7210 | 1 | Bracket-Control |
| 23 | 114-8598 | 1 | Rod-Lever, Cylinder |
| 24 | 3256-26 | 2 | Washer-Flat |
| 25 | 33114-060 | 1 | Screw-HH |
| 26 | 3234-14 | 1 | Screw-HHF |
| 27 | 3272-7 | 2 | Pin-Cotter |
| 28 | 233-21 | 1 | Knob |
| 29 | 120-7352 | 1 | Pin-Pivot |
| 30 | 321-18 | 1 | Screw-HH |
| 32 | 302-5 | 1 | Fitting-Grease |
| 33 | 121-1955 | 1 | HYD Cylinder ASM |
| 34 | 340-82 | 1 | Fitting-Elbow, 90 DEG |
| 34:1 | 237-42 | 1 | O-Ring |
| 34:2 | 237-21 | 1 | O-Ring |
| 35 | 115-4081 | 1 | Valve-Check |
| 35:1 | 237-42 | 1 | O-Ring |
| 35:2 | 237-22 | 1 | O-Ring |
| 36 | 340-159 | 1 | Elbow-90 |
| 36:1 | 237-22 | 2 | O-Ring |
| 37 | 114-3043 | 1 | Hose-HYD |
| 38 | 114-3044 | 1 | Hose-HYD |
| 39 | 114-3045 | 1 | Hose-HYD |
| 40 | 114-3046 | 1 | Hose-HYD |
| 41 | 114-3085 | 1 | Hose-HYD |
| 42 | 117-4038 | 1 | Hose-HYD |
| 43 | 99-5648 | 2 | Sleeve-Protective |
| 44 | 115-4064 | 1 | Sleeve-Protective |
| 45 | 3334-945 | 8 | Tie-Cable |
| 46 | 131-0652 | 1 | HYD Motor ASM |
| 47 | 325-6 | 2 | Screw-HH |
| 48 | 340-6 | 2 | Fitting-Straight |
| 48:1 | 237-30 | 1 | O-Ring |
| 48:2 | 237-80 | 1 | O-Ring |
| 49 | 3253-7 | 2 | Washer-Lock |

# 2-Spool Valve Assembly No. 115-4062

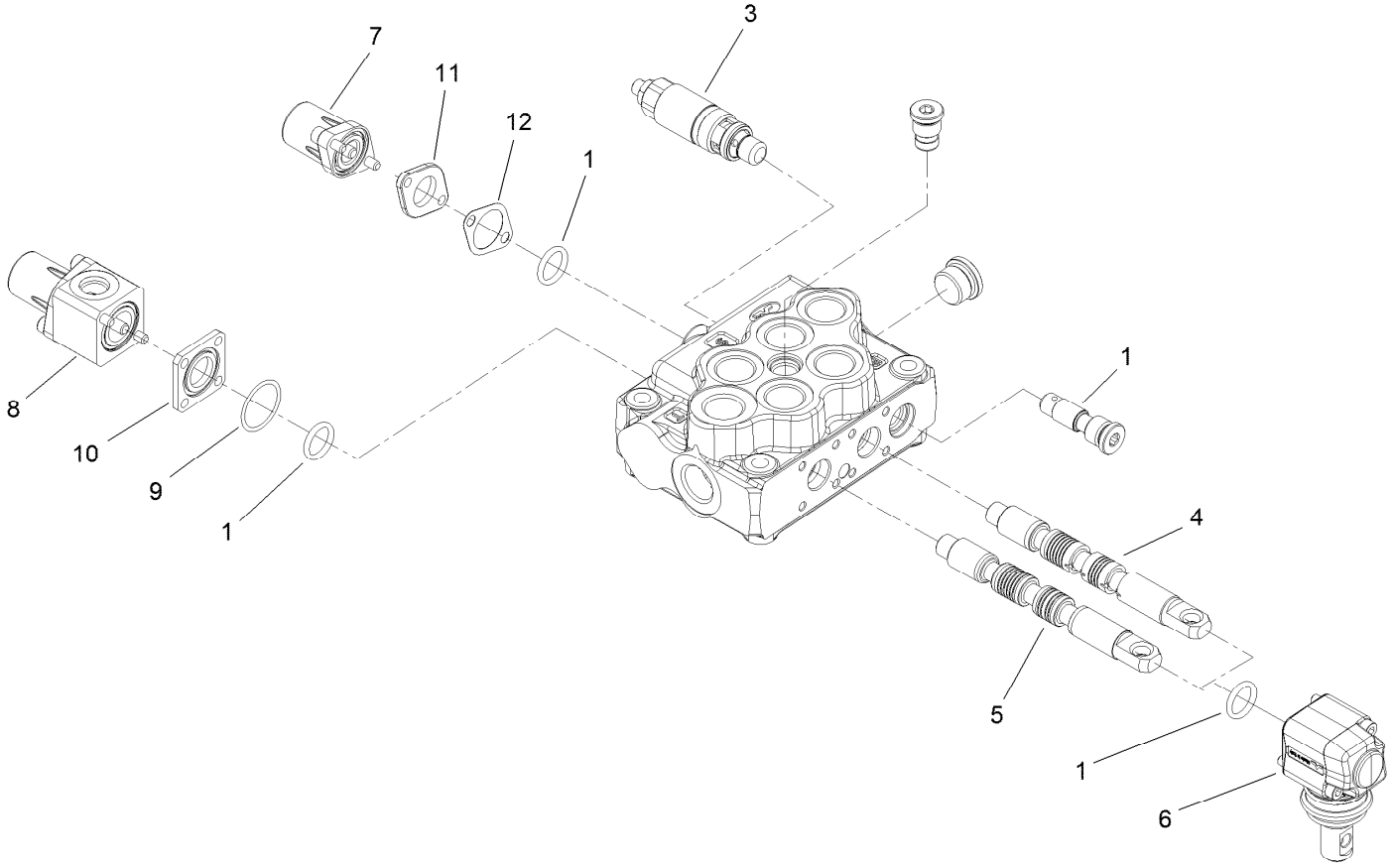

# 2-Spool Valve Assembly No. 115-4062 (continued)

| Ref. | Part Number | Qty. | Description |
|---|---|---|---|
| 1 | 106-7719 | 4 | Seal-Valve |
| 3 | 100-8805 | 1 | Valve-Relief |
| 4 | 115-4084 | 1 | Spool-Valve |
| 5 | 106-7572 | 1 | Spool |
| 6 | 100-7229 | 2 | Lever Kit |
| 7 | 115-4092 | 1 | Spring Return Kit |
| 8 | 115-4093 | 1 | Switch Spring Return Kit |
| 9 | 115-4097 | 1 | Seal-Return |
| 10 | 115-4094 | 1 | Spacer-Square |
| 11 | 115-4089 | 1 | Spacer-Spring Return |
| 12 | 115-4088 | 1 | Gasket-Return |

# Hydraulic Cylinder Assembly No. 121-1955

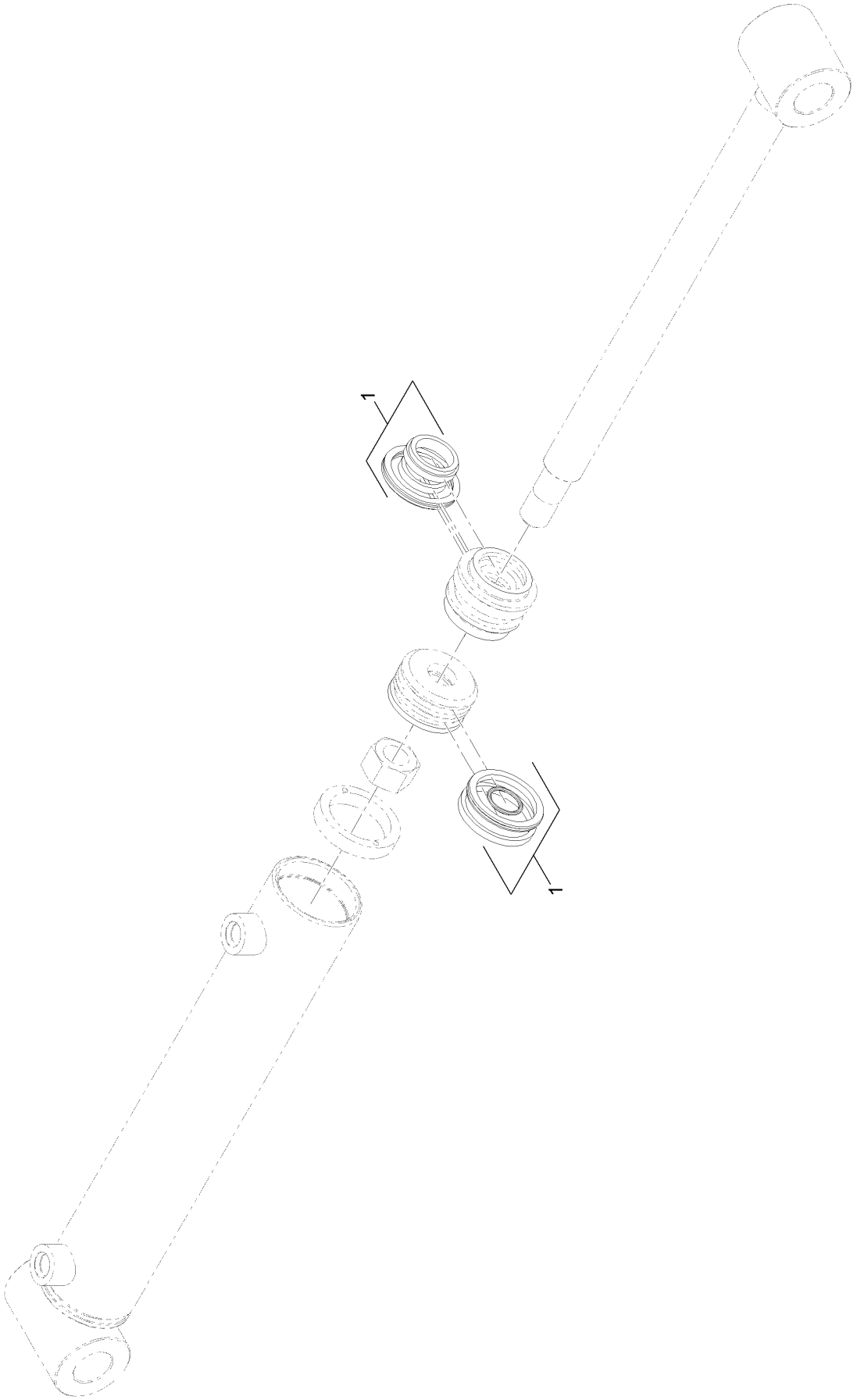

# Hydraulic Cylinder Assembly No. 121-1955 (continued)

| Ref. | Part Number | Qty. | Description |
|---|---|---|---|
| 1 | 131-0665 | 1 | Seal Kit |

# Hydraulic Motor Assembly No. 131-0652

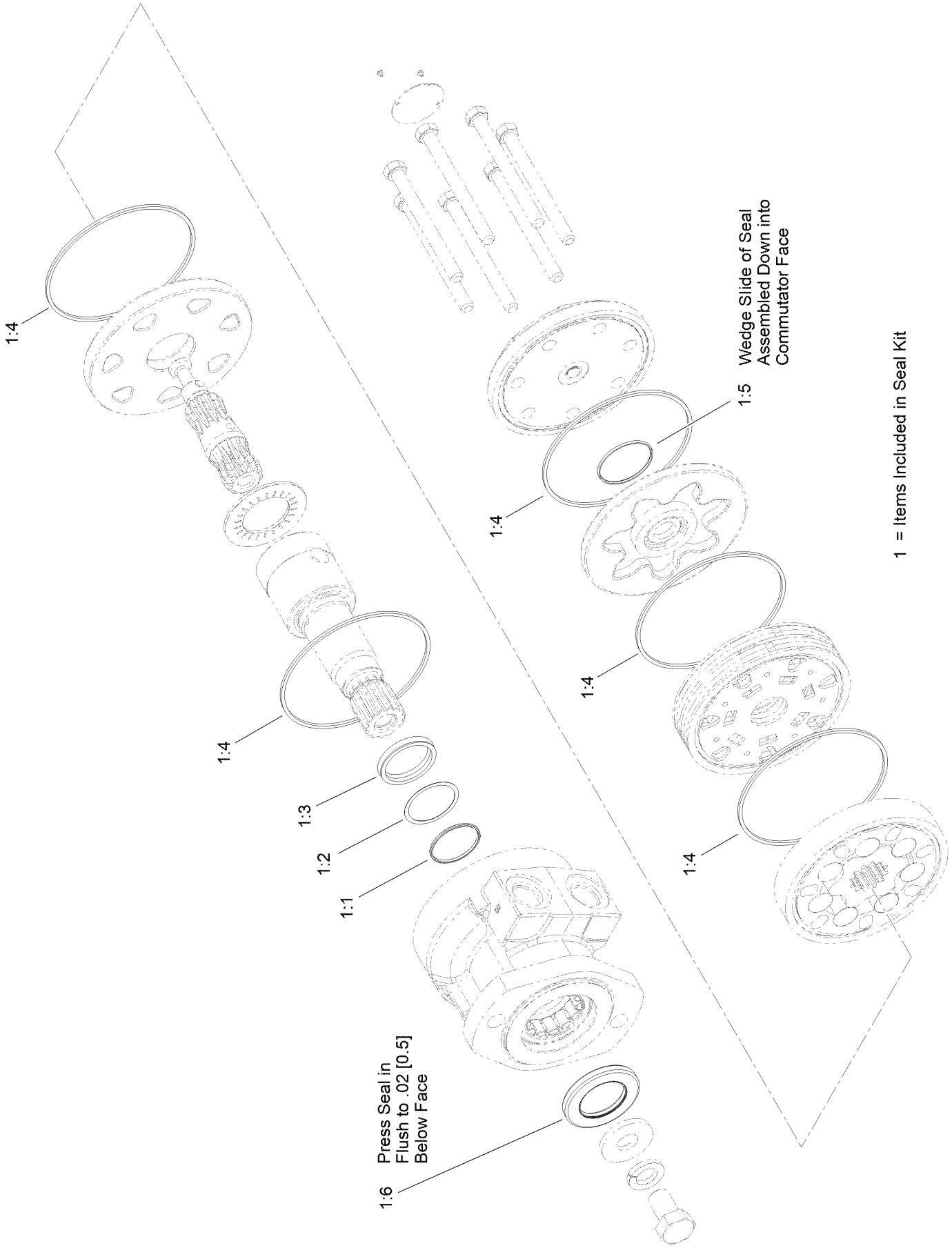

# Hydraulic Motor Assembly No. 131-0652 (continued)

| Ref. | Part Number | Qty. | Description |
|---|---|---|---|
| 1 | 76-0800 | 1 | Seal Kit |
| 1:1 | | 1 | Ring-Back Up ● |
| 1:2 | | 1 | Washer-Back Up ● |
| 1:3 | | 1 | Seal-Shaft ● |
| 1:4 | | 6 | Seal-Ring ● |
| 1:5 | | 1 | Seal-Commutator ● |
| 1:6 | | 1 | Seal-Dirt And Water ● |

● Not serviced separately

# Hydraulic Oil Cooler Assembly

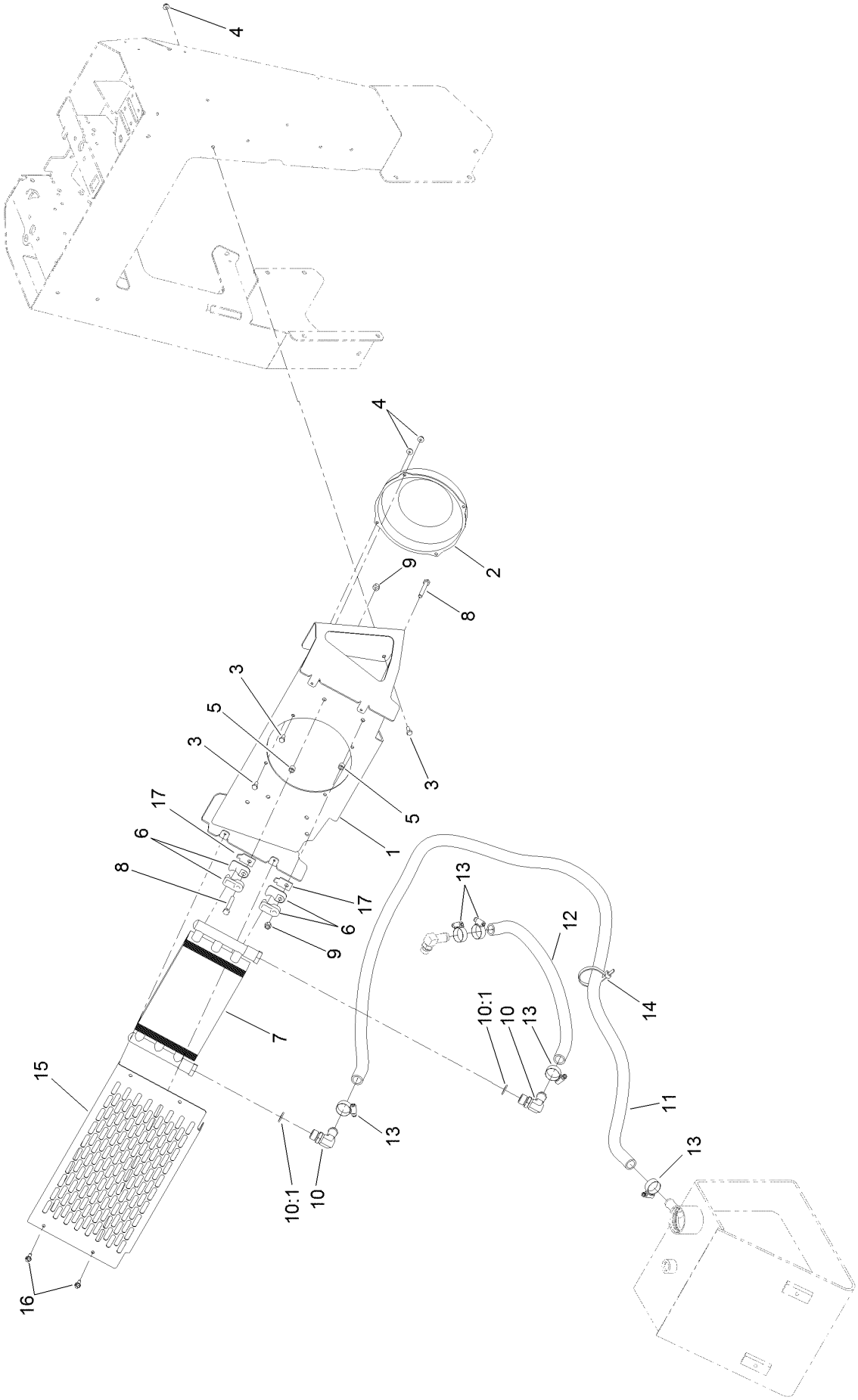

# Hydraulic Oil Cooler Assembly (continued)

| Ref. | Part Number | Qty. | Description |
|---|---|---|---|
| 1 | 117-6296-01 | 1 | Mount-Cooler |
| 2 | 104-2809 | 1 | Fan |
| 3 | 321-3 | 8 | Screw-HH |
| 4 | 104-7201 | 8 | Nut-HF, NI |
| 5 | 105-5723 | 4 | Spacer-Tube |
| 6 | 131-0733 | 8 | Clamp |
| 7 | 105-0352 | 1 | Exchanger-Heat |
| 8 | 322-11 | 4 | Screw-HH |
| 9 | 3296-29 | 4 | Nut-Lock, NI |
| 10 | 87-8170 | 2 | Fitting-90 |
| 10:1 | 237-80 | 1 | O-Ring |
| 11 | 115-1207 | 1 | Hose-Return |
| 12 | 125-0266 | 1 | Hose-Return |
| 13 | 2412-129 | 4 | Clamp-Hose |
| 14 | 3334-945 | 3 | Tie-Cable |
| 15 | 119-4633-01 | 1 | Cover-Cooler |
| 16 | 32104-95 | 4 | Screw-HWH |
| 17 | 131-0642 | 4 | Plate-Support, Clamp |

# Trencher Head and Auger Assembly

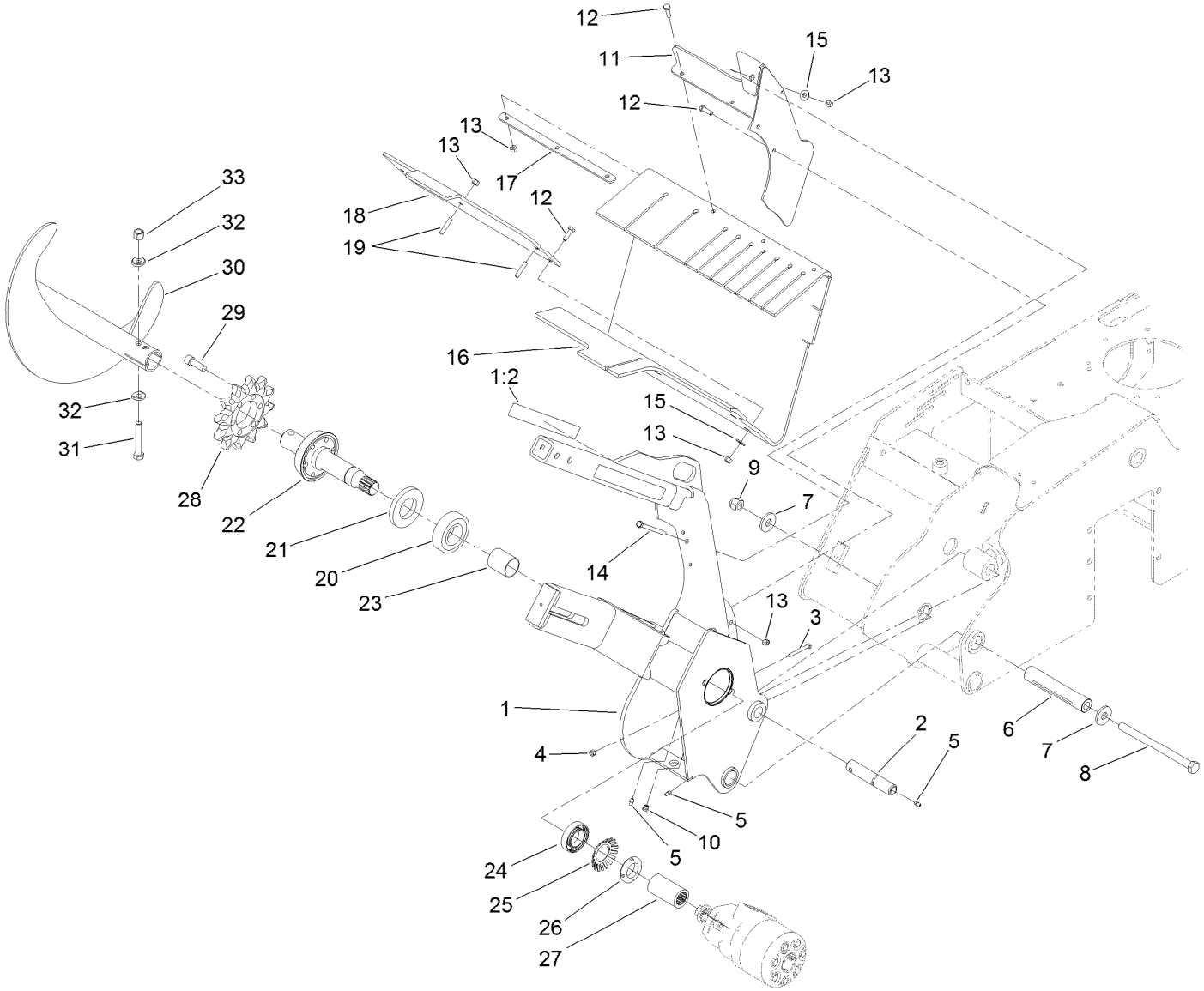

# Trencher Head and Auger Assembly (continued)

| Ref. | Part Number | Qty. | Description |
|---|---|---|---|
| 1 | 117-6423 | 1 | Trencher Head ASM |
| 1:2 | 99-9952 | 2 | Decal-Danger |
| 2 | 120-7352 | 1 | Pin-Pivot |
| 3 | 321-18 | 1 | Screw-HH |
| 4 | 3296-42 | 1 | Nut-Lock, NI |
| 5 | 302-5 | 3 | Fitting-Grease |
| 6 | 121-4571 | 1 | Spacer-Pivot |
| 7 | 104-9216 | 2 | Washer-Hardened |
| 8 | 117-6327 | 1 | Bolt-HH |
| 9 | 3296-53 | 1 | Nut-Lock, NI |
| 10 | 302-34 | 1 | Fitting-Lube |
| 11 | 115-1279-03 | 1 | Bracket-Shield |
| 12 | 322-5 | 8 | Screw-HH |
| 13 | 3296-29 | 11 | Nut-Lock, NI |
| 14 | 322-23 | 1 | Screw-HH |
| 15 | 3256-3 | 4 | Washer-Flat |
| 16 | 117-6317 | 1 | Shield-Dirt |
| 17 | 115-4001-03 | 1 | Plate-Strap, Shield |
| 18 | 117-6316-03 | 1 | Clamp-Bar |
| 19 | 115-4049 | 2 | Screw-HSH |
| 20 | 106-8871 | 1 | Bearing-Ball |
| 21 | 114-2955 | 1 | Seal-Grease |
| 22 | 117-6308 | 1 | Shaft-Trencher |
| 23 | 112-4979 | 1 | Spacer |
| 24 | 111199 | 1 | Bearing-Ball |
| 25 | 114-2956 | 1 | Lockwasher-Bearing |
| 26 | 88-1450 | 1 | Locknut-Bearing |
| 27 | 117-6315 | 1 | Collar-Splined |
| 28 | 104-1964 | 1 | Sprocket-Trencher |
| 29 | 3274-4 | 6 | Screw-HSH |
| 30 | 137-3737-03 | 1 | Auger-Trencher |
| 31 | 325-13 | 1 | Screw-HH |
| 32 | 117-3479 | 2 | Washer-Saddle |
| 33 | 3296-23 | 1 | Nut-Lock, NI |

# Traction Control Assembly

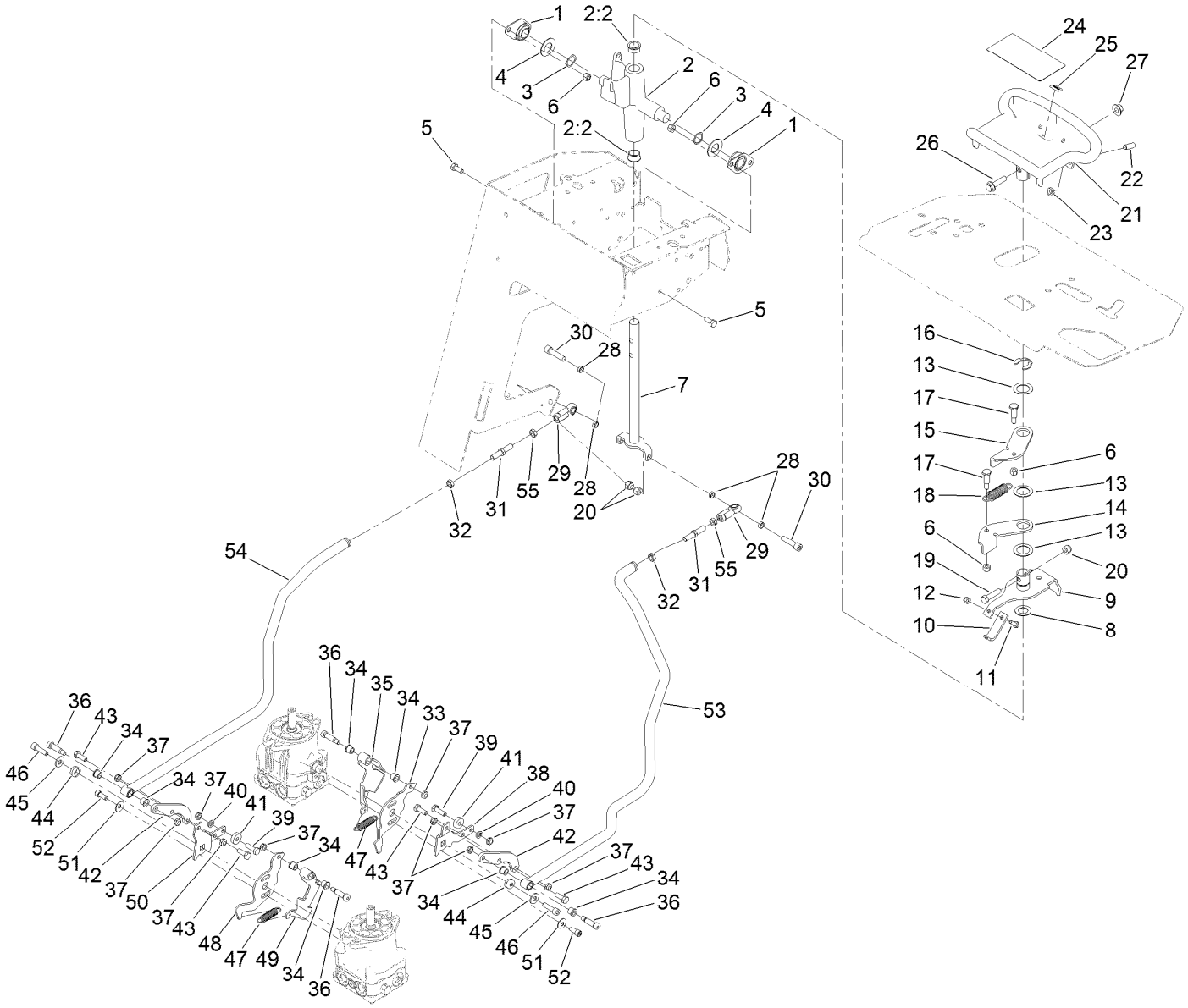

# Traction Control Assembly (continued)

| Ref. | Part Number | Qty. | Description |
|---|---|---|---|
| 1 | 27-2320 | 2 | Bearing |
| 2 | 106-5737 | 1 | Control Support ASM |
| 2:2 | 256-252 | 2 | Bearing-Flange |
| 3 | 95-3703 | 2 | Washer-Spring, Wave |
| 4 | 3256-39 | 2 | Washer-Flat |
| 5 | 322-3 | 4 | Screw-HH |
| 6 | 3296-29 | 6 | Nut-Lock, NI |
| 7 | 117-6335 | 1 | Rod-Drive |
| 8 | 257-8 | 1 | Washer-Thrust |
| 9 | 112-2783 | 1 | Lever-Pivot |
| 10 | 115-1204 | 1 | Plate-Neutral |
| 11 | 321-4 | 1 | Screw-HH |
| 12 | 3296-42 | 1 | Nut-Lock, NI |
| 13 | 108-9743 | 3 | Washer-Plain |
| 14 | 98-8407 | 1 | Lever-Return, RH |
| 15 | 98-8408 | 1 | Lever-Return, LH |
| 16 | 32151-91 | 1 | Ring-Retaining |
| 17 | 63-2650 | 2 | Screw-Shoulder |
| 18 | 108-4724 | 1 | Spring-Extension |
| 19 | 323-8 | 1 | Screw-HH |
| 20 | 3296-39 | 3 | Nut-Lock, NI |
| 21 | 120-5380-03 | 1 | Handle-Control |
| 22 | 3247-6 | 2 | Screw-Set |
| 23 | 3218-3 | 2 | Nut-Jam |
| 24 | 115-4020 | 1 | Decal-Traction |
| 25 | 98-1459 | 1 | Decal |
| 26 | 3234-18 | 1 | Screw-HHF |
| 27 | 32128-43 | 1 | Nut-Flange |
| 28 | 108-0634 | 4 | Spacer-Plate, Retaining |
| 29 | 103-1167 | 2 | Joint-Ball End, LH |
| 30 | 3274-2 | 2 | Screw-HSH |
| 31 | AU107344 | 2 | Screw-Jack, Control |
| 32 | 3220-3 | 2 | Nut-HJ |
| 33 | 115-6549 | 1 | Plate-Base, LH |
| 34 | 256-116 | 8 | Bushing-Flange |
| 35 | 115-6637 | 1 | Pivot-LH |
| 36 | 114-8629 | 4 | Bolt-Shoulder |
| 37 | 3296-47 | 10 | Nut-Lock,NI |
| 38 | 115-6628 | 1 | Plate-Arm, Return, LH |
| 39 | 322-5 | 2 | Screw-HH |
| 40 | 3253-4 | 2 | Washer-Lock |
| 41 | 251-259 | 2 | Bearing-Ball |
| 42 | 115-1290 | 2 | Plate-Adapter, Control, RH |
| 43 | 322-4 | 4 | Screw-HH |
| 44 | 117-6429 | 2 | Lock-Trunion |
| 45 | 3256-3 | 2 | Washer-Flat |
| 46 | 94-3559 | 2 | Screw-HSH |
| 47 | 121-4409 | 2 | Spring-Extension |
| 48 | 115-6535 | 1 | Plate-Base, RH |
| 49 | 115-6636 | 1 | Pivot-RH |
| 50 | 115-6536 | 1 | Plate-Arm, Return |
| 51 | 3290-456 | 2 | Washer-Belleville |
| 52 | 3273-14 | 2 | Screw-HSH |
| 53 | 131-0668 | 1 | Link-Steering, LH |
| 54 | 131-0669 | 1 | Link-Steering, RH |
| 55 | AU129-289 | 2 | Nut-Jam, LH |

# Engine Wire Harness Assembly

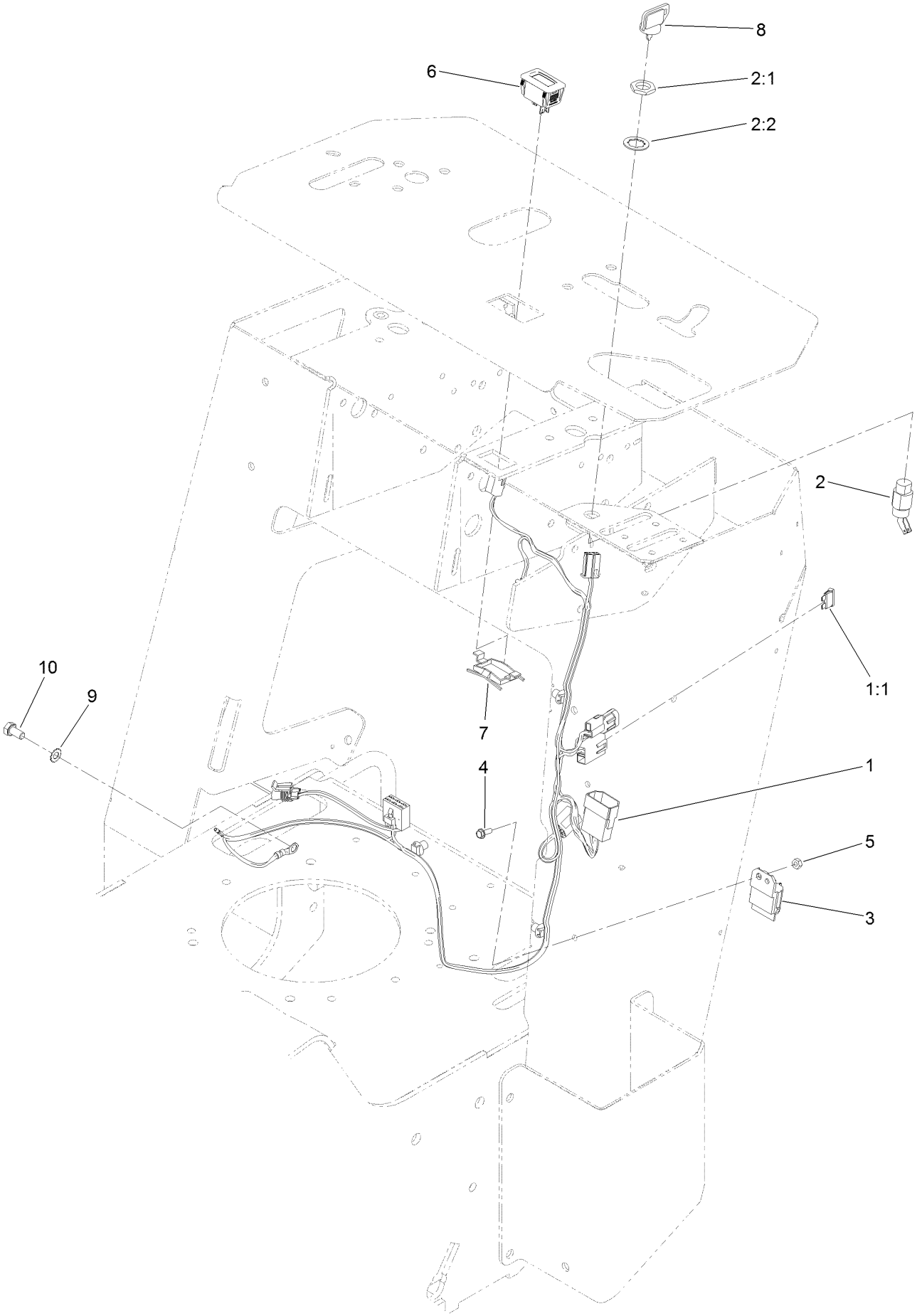

# Engine Wire Harness Assembly (continued)

| Ref. | Part Number | Qty. | Description |
|---|---|---|---|
| 1 | 117-6287 | 1 | Harness-Wire |
| 1:1 | 109355 | 1 | Fuse-Blade, 15 Amp |
| 2 | 29-5560 | 1 | Switch-On / Off |
| 2:1 | 218-461 | 1 | Nut-HH |
| 2:2 | 3254-5 | 1 | Washer-Lock |
| 3 | 1-323430 | 1 | Module-Interlock |
| 4 | 32105-23 | 1 | Screw |
| 5 | 3296-2 | 1 | Nut-Lock, NI |
| 6 | 120-2244 | 1 | Hourmeter |
| 7 | 104-4234 | 1 | Clip-Mounting |
| 8 | 63-8360 | 1 | Key-Ignition |
| 9 | 3255-8 | 1 | Washer-Lock |
| 10 | 33114-016 | 1 | Screw-HH |

# Attachments and Accessories

## For 22972 TRX-16 Trencher

| Product Name | Model/Part |
|---|---|
| Crumber Kit | 22477 |
| 24in X 4in Soil Chain | 22480 |
| 24in X 4in Combination Chain | 22481 |
| 24in X 4in Rock Tooth Chain | 22482 |
| 24in X 6in Soil Chain | 22483 |
| 24in X 6in Combination Chain | 22484 |
| 24in X 6in Rock Tooth Chain | 22485 |
| 36in X 4in Soil Chain | 22486 |
| 36in X 4in Combination Chain | 22487 |
| 36in X 4in Rock Tooth Chain | 22488 |
| 36in X 6in Rock Tooth Chain | 22489 |
| 36in X 6in Soil Chain | 22490 |
| 36in X 6in Combination Chain | 22491 |
| 48in x 4in Soil Chain | 22492 |
| 48in x 4in Combination Chain | 22493 |
| 48in x 6in Soil Chain | 22494 |
| 48in x 6in Combination Chain | 22495 |
| 24in X 4in Bullet Chain | 22496 |
| 24in X 6in Bullet Chain | 22497 |
| 36in X 4in Bullet Chain | 22498 |
| 36in X 6in Bullet Chain | 22499 |
| 24in Trencher Boom | 22975 |
| 36in Trencher Boom | 22976 |
| 48in Trencher Boom | 22977 |
| Bore Drive Attachment | 22978 |
| Backfill Blade | 22980 |
| Spark Arrestor Screen | 94-8157 |

**Notes:**

**Notes:**

**Notes:**

TORO®

Count on it.