FORM NO. 3324-616 Rev A

TORO®

MODEL NO. 30581—80001 & UP

OPERATOR'S MANUAL

GROUNDSMASTER® 580-D

To understand this product, and for safety and optimum performance, read this manual before starting operation. Pay special attention to SAFETY INSTRUCTIONS highlighted by this symbol.



© The TORO Company 1999

FOREWORD

This operator's manual has instructions on safety, proper set-up and operation, adjustments and maintenance. Therefore, anyone involved with the product, including the operator, should read and understand this manual. This manual emphasizes safety, mechanical and general product information. DANGER, WARNING and CAUTION identify safety messages. Whenever the triangular safety alert symbol appears, understand the safety message that follows. For complete safety instructions, read pages 3–5. IMPORTANT highlights special mechanical information and NOTE emphasizes general product information worthy of special attention.

Whenever you have questions or need service, contact your local authorized Toro Distributor. In addition to having a complete line of accessories and professional turf care service technicians, the distributor has a complete line of genuine TORO replacement parts to keep your machine operating properly. Keep your TORO all TORO. Buy genuine TORO parts and accessories.

TABLE OF CONTENTS

SAFETY INSTRUCTIONS	3
SYMBOL GLOSSARY	6
SPECIFICATIONS	9
BEFORE OPERATING	11
CONTROLS	16
OPERATING INSTRUCTIONS	20
MAINTENANCE	27
IDENTIFICATION AND ORDERING	47

Safety Instructions

Training

1. Read the instructions carefully. Be familiar with the controls and the proper use of the equipment.

2. Never allow children or people unfamiliar with these instructions to use the lawn mower. Local regulations may restrict the age of the operator.

3. Never mow while people, especially children, or pets are nearby.

4. Keep in mind that the operator or user is responsible for accidents or hazards occurring to other people or their property.

5. Do not carry passengers.

6. All drivers should seek and obtain professional and practical instruction. Such instruction should emphasize:

- the need for care and concentration when working with ride-on machines;
- control of a ride-on machine sliding on a slope will not be regained by the application of the brake. The main reasons for loss of control are:
  - insufficient wheel grip;
  - being driven too fast;
  - inadequate braking;
  - the type of machine is unsuitable for its task;
  - lack of awareness of the effects of ground conditions, especially slopes;
  - ##incorrect hitching and load distribution.

Preparation

1. While mowing, always wear substantial footwear and long trousers. Do not operate the equipment when barefoot or wearing open sandals.

2. Thoroughly inspect the area where the equipment is to be used and remove all objects which may be thrown by the machine.

3. **WARNING—Petrol is highly flammable.**

- Store fuel in containers specifically designed for this purpose.
- Refuel outdoors only and do not smoke while refueling.
- Add fuel before starting the engine. Never remove the cap of the fuel tank or add petrol while the engine is running or when the engine is hot.
- If petrol is spilled, do not attempt to start the engine but move the machine away from the are of spillage and avoid creating any source of ignition until petrol vapors have dissipated.
- Replace all fuel tanks and container caps securely.

4. Replace faulty silencers.

Operation

1. Do not operate the engine in a confined space where dangerous carbon monoxide fumes can collect.

2. Mow only in daylight or in good artificial light.

3. Before attempting to start the engine, disengage all blade attachment clutches and shift into neutral.

4. Do not use on slopes of more than:

- Never mow side hills over 5°
- Never mow uphill over 10°
- Never mow downhill over 15°

5. Remember there is no such thing as a “safe” slope. Travel on grass slopes requires particular care. To guard against overturning:

- do not stop or start suddenly when going up or downhill;
- engage the clutch slowly, and always keep the machine in gear, especially when travailing downhill;
- machine speeds should be kept low on slopes and during tight turns;
- stay alert for bumps and hollows and other hidden hazards;

- never mow across the face of the slope, unless the lawn mower is designed for this purpose.

6. Use care when pulling loads or using heavy equipment.

- Use only approved drawbar hitch points.
- Limit loads to those you can safely control.
- Do not turn sharply. Use care when reversing.
- Use counterweight(s) or wheel weights when suggested in the instruction handbook.

7. Watch out for traffic when crossing or near roadways.

8. Stop the blades rotating before crossing surfaces other than grass.

9. When using any attachments, never direct discharge of material toward bystanders nor allow anyone near the machine while in operation .

10. Never operate the lawn mower with defective guards, shields or without safety protective devices in place.

11. Do not change the engine governor settings or overspeed the engine. Operating the engine at excessive speeds may increase the hazard of personal injury.

12. Before leaving the operator's position:

- disengage the power take-off and lower the attachments;
- change into neutral and set the parking brake;
- stop the engine and remove the key.

13. Disengage the drive to attachments when transporting or not in use.

14. Stop the engine and disengage the drive to the attachment

- before refueling;
- before removing the grass catcher;
- before making height adjustments unless the adjustment can be made from the operator's position.
- before clearing blockages;
- before checking, cleaning or working on the lawn mower;
- after striking a foreign object. Inspect the lawn mower for damage and make repairs before restarting and operating the equipment.

15. Reduce the throttle setting during engine runout and, if the engine is provided with a shutoff valve, turn the fuel off at the conclusion of mowing.

Maintenance and Storage

1. Keep all nuts, bolts and screws tight to be sure the equipment is in safe working condition.

2. Never store the equipment with petrol in the tank inside a building where fumes may reach an open flame or spark.

3. Allow the engine to cool before storing in any enclosure.

4. To reduce the fire hazard, keep the engine, silencer, battery compartment and petrol storage area free of grass, leaves, or excessive grease.

5. Check the grass catcher frequently for wear or deterioration.

6. Replace worn or damaged parts for safety.

7. If the fuel tank has to be drained, this should be done outdoors.

8. Be careful during adjustment of the machine to prevent entrapment of the fingers between moving blades and fixed parts of the machine.

9. On multi-bladed machines, take care as rotating one blade can cause other blades to rotate.

10. When the machine is to be parked, stored or left unattended, lower the cutting means unless a positive mechanical lock is used.

Sound & Vibration Levels

Sound Levels

This unit has an equivalent continuous A-weighted sound pressure at the operator ear of: 81 dB(A), based on measurements of identical machines per 84/538/EEC.

Vibration Levels

This unit has a vibration level of 2.5 m/s^2 at the posterior, based on measurements of identical machines per ISO 5349 procedures.

This unit does not exceed a vibration level of 0.5 m/s^2 at the posterior based on measurements of identical machines per ISO 2631 procedures.

Symbol Glossary

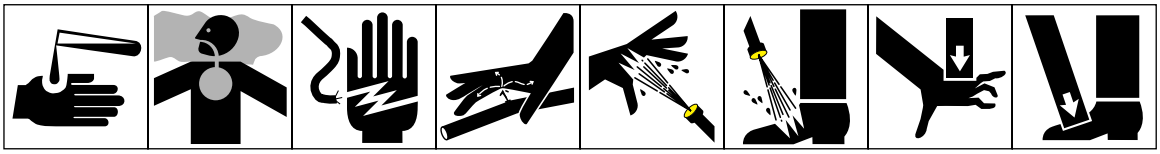

Caustic liquids, chemical burns to fingers or hand | Poisonous fumes or toxic gases, asphyxiation | Electrical shock, electrocution | High pressure fluid, injection into body | High pressure spray, erosion of flesh | High pressure spray, erosion of flesh | Crushing of fingers or hand, force applied from above | Crushing of toes or foot, force applied from above

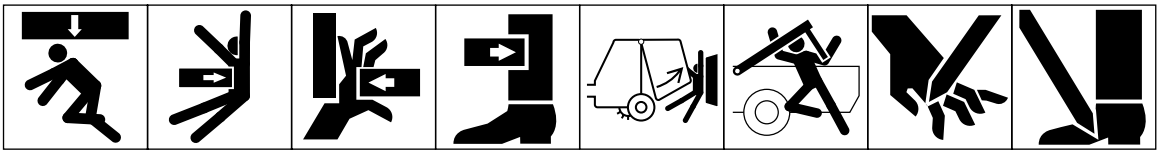

Crushing of whole body, applied from above | Crushing of torso, force applied from side | Crushing of fingers or hand, force applied from side | Crushing of leg, force applied from side | Crushing of whole body | Crushing of head, torso and arms | Cutting of fingers or hand | Cutting of foot

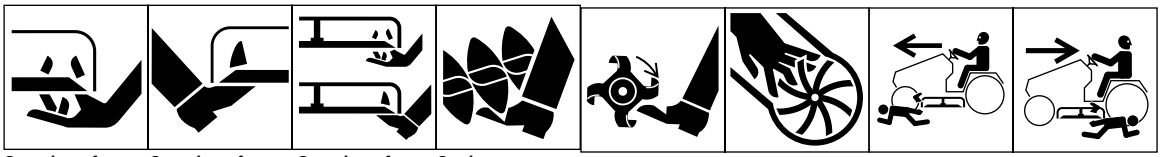

Severing of fingers or hand, mower blade | Severing of toes or foot, mower blade | Severing of toes or fingers, rotary mower blade | Cutting or entanglement of foot, rotating auger | Severing of foot, rotating knives | Severing of fingers or hand, impeller blade | Dismember-ment, front engine mower in forward motion | Dismember-ment, front engine mower in rearward motion

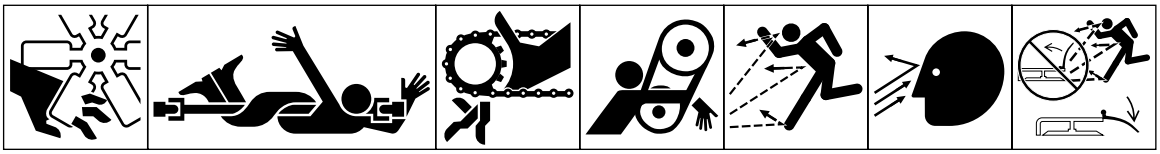

Severing of fingers or hand, engine fan | Whole body entanglement, implement input drive line | Fingers or hand entangle-ment, chain drive | Hand & arm entanglement, belt drive | Thrown or flying objects, whole body exposure | Thrown or flying objects, face exposure | Thrown or flying objects, rotary mover

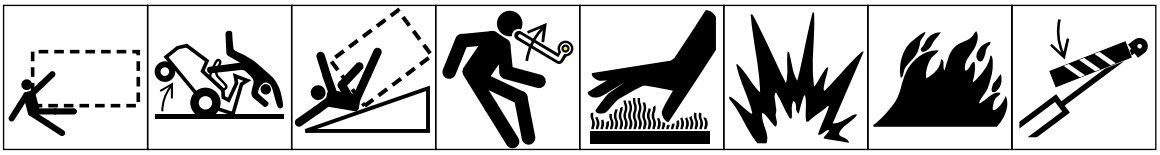

Runover/back-over, vehicle | Machine tipping, riding mower | Machine rollover, ROPS (rear engine mower) | Stored energy hazard, kickback or upward motion | Hot surfaces, burns to fingers or hands | Explosion | Fire or open flame | Secure lifting cylinder with locking device before getting in hazardous area

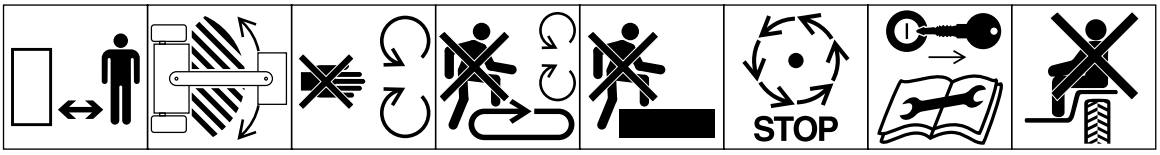

Stay a safe distance from the machine | Stay clear of articulation area while engine is running | Do not open or remove safety shields while engine is running | Do not step on loading platform if PTO is connect-ed to tractor & engine is running | Do not step | Wait until all machine comp-onents have completely stopped before touching them | Shut off engine & remove key before perform-ing maintenance or repair work | Riding on this machine is allowed only on a passen-ger seat & only if the driver's view is not hindered

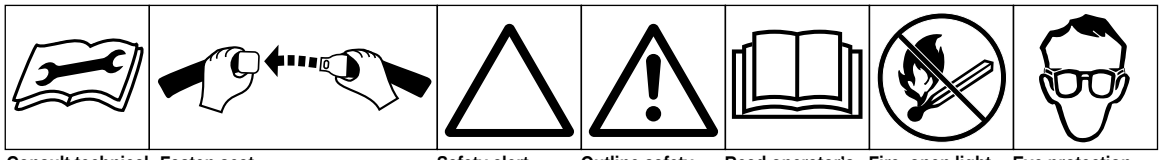

Consult technical manual for proper service procedures | Fasten seat belts | Safety alert triangle | Outline safety alert symbol | Read operator's manual | Fire, open light and smoking prohibited | Eye protection must be worn

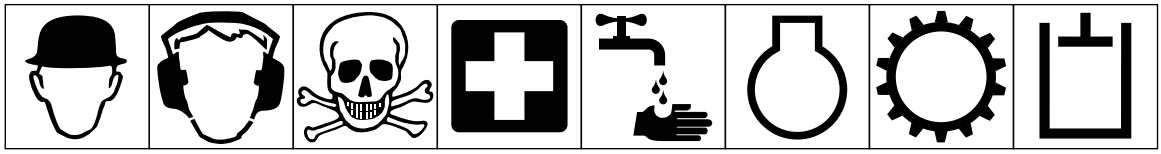

Head protection must be worn | Hearing protection must be worn | Caution, toxic risk | First aid | Flush with water | Engine | Transmission | Hydraulic system

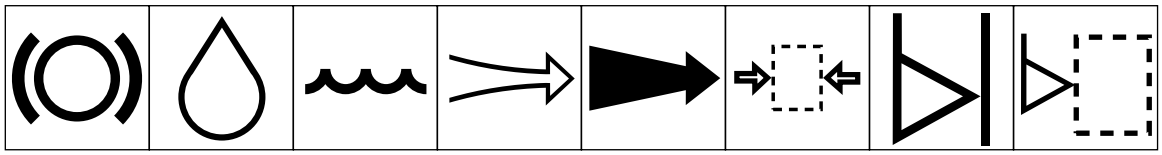

Brake system | Oil | Coolant (water) | Intake air | Exhaust gas | Pressure | Level indicator | Liquid level

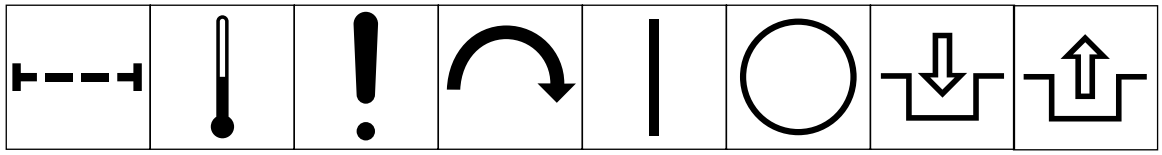

Filter | Temperature | Failure/ Malfunction | Start switch/ mechanism | On/start | Off/stop | Engage | Disengage

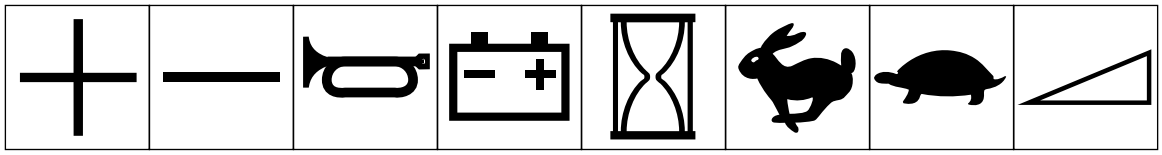

Plus/increase/ positive polarity | Minus/decrease/ negative polarity | Horn | Battery charging condition | Hourmeter/ elapsed operating hours | Fast | Slow | Continuous variable, linear

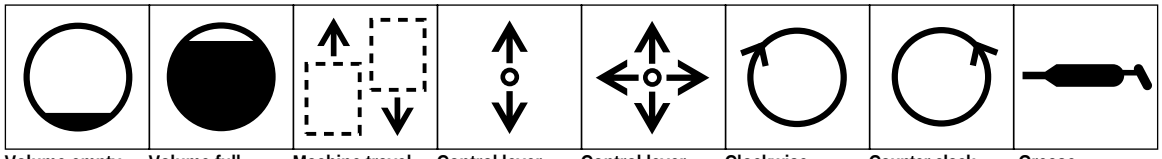

Volume empty | Volume full | Machine travel direction, forward/ rearward | Control lever operating direction, dual direction | Control lever operating direction, multiple direction | Clockwise rotation | Counter-clock-wise rotation | Grease lubrication point

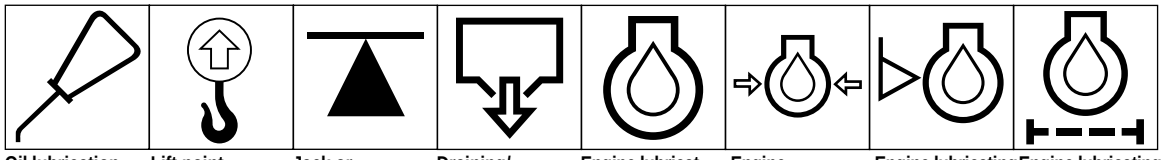

Oil lubrication point | Lift point | Jack or support point | Draining/ emptying | Engine lubricat-ing oil | Engine lubricating oil pressure | Engine lubricating oil level | Engine lubricating oil filter

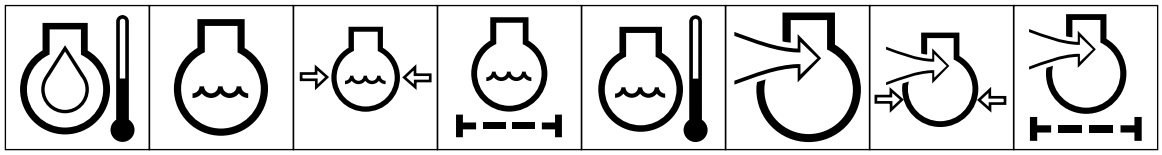

Engine lubricating oil temperature | Engine coolant | Engine coolant pressure | Engine coolant filter | Engine coolant temperature | Engine intake/ combustion air | Engine intake/com-bustion air pressure | Engine intake/air filter

Symbol Glossary, continued

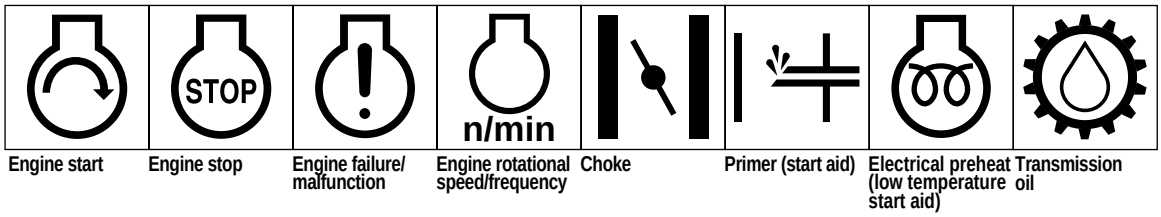

Engine start | Engine stop | Engine failure/ malfunction | Engine rotational speed/frequency | Choke | Primer (start aid) | Electrical preheat (low temperature start aid) | Transmission oil

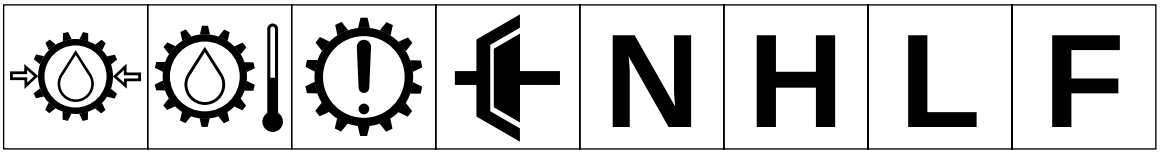

Transmission oil pressure | Transmission oil temperature | Transmission failure/malfunction | Clutch | Neutral | High | Low | Forward

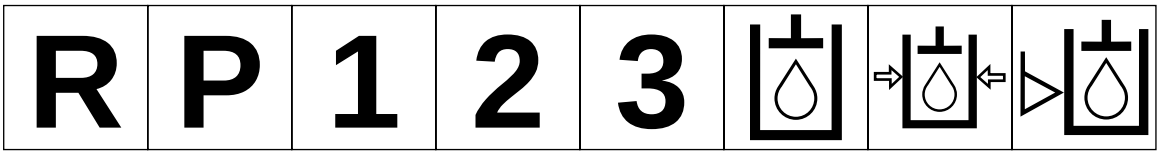

Reverse | Park | First gear | Second gear | Third gear (other #'s may be used until the maximum # of forward gears is reached.) | Hydraulic oil | Hydraulic oil pressure | Hydraulic oil level

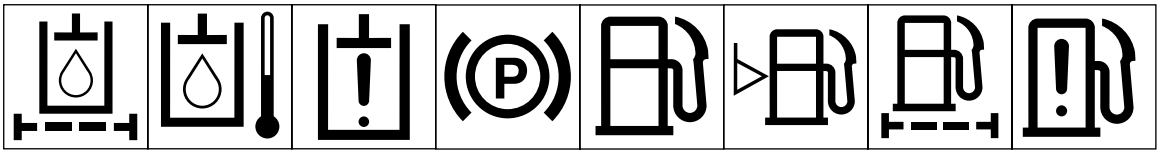

Hydraulic oil filter | Hydraulic oil temperature | Hydraulic oil failure/malfunction | Parking brake | Fuel | Fuel level | Fuel filter | Fuel system failure/malfunction

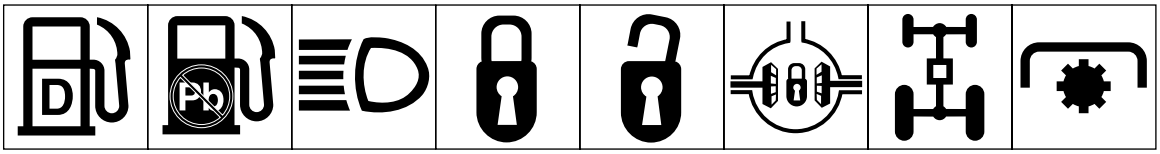

Diesel fuel | Unleaded fuel | Headlights | Lock | Unlock | Differential lock | 4-Wheel drive | Power Take-Off

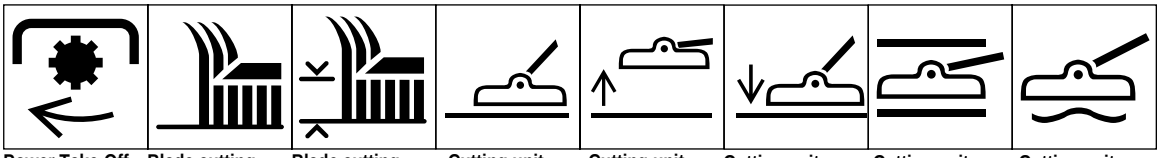

Power Take-Off, rotational speed | Blade cutting element | Blade cutting element, height adjustment | Cutting unit | Cutting unit, raise | Cutting unit, lower | Cutting unit, hold | Cutting unit, float

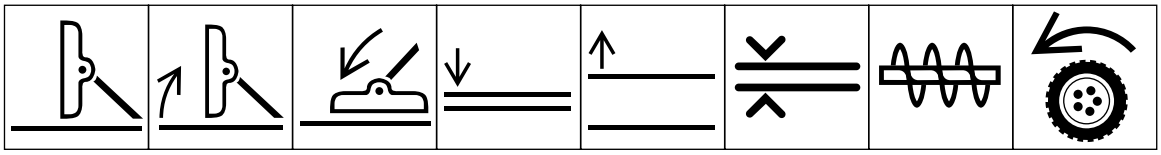

Cutting unit, transport position | Cutting unit, raise to transport position | Cutting unit, lower to transport position | Attachment lower | Attachment raise | Spacing distance | Snow thrower, collector auger | Traction

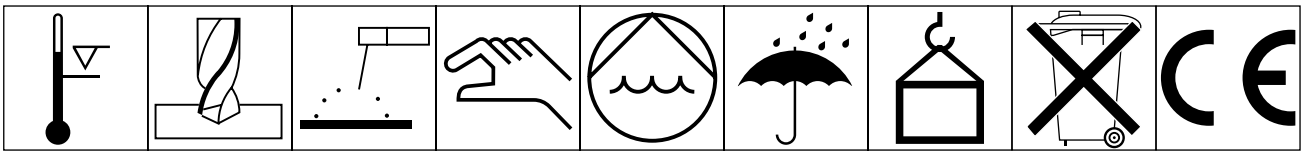

Above working temperature range | Drilling | Manual metal arc welding | Manual | Water pump | Keep dry | Weight | Do not dispose in the garbage | CE logo

Specifications

CUTTING UNITS

Cutting Unit Drive System: All hydraulic drive. Initial cutting drive engagement via electric switch. Drive shuts off or engages individually as cutting units are raised or lowered.

Automatic Weight Transfer: Patented automatic weight transfer from decks to traction unit under demanding traction situations for improved traction and deck floatation.

Cutting Unit Configuration: A 234 cm Triflex front center cutting unit and two 145cm outboard cutting units.

Mowing Rate/Width: Mows up to 5.9 hectares at 12.1 km/hr using all cutting units (assumes no overlap and stops).

Total Cutting Width: 488 cm.

Height-of-Cut Range: 2.5–10.2 cm. High 6.3–14 cm.

Blades: Interchangeable heat-treated steel blades, 50.8 cm long, 6.3 mm thick and 6.3 cm wide. Five blades on the Triflex and three each on the outboard unit.

Anti-scalp Devices: Cutting units equipped with adjustable skids. Anti-scalp cup on each blade assembly.

TRIFLEX CUTTING UNIT (FRONT)

Type: Triflex front mounted rotary cutting unit with 5-blade spindles and 234 cm width of cut.

Trimming Ability: Trims to either side. 20.3 cm cutting unit offset from the outside of the wheel to trim side of front cutting unit on either side.

Height-of-Cut Adjustment: 12.7 mm increments by spacers on front castor shafts and clevis pins on rear wheel forks.

Cutter Drive: Hydraulic gear motor. “BB” hex section belt to center cutting unit spindles, “B” section belt to wings. Splined shafts, each in two greaseable, tapered roller bearings in cast iron housings (greaseable from the top). Self-tensioning, permanently lubricated belt idlers.

Castor Wheels: Two 10.50 x 3.50 and two 12 x 5.00 heavy duty, pneumatic castor wheels.

OUTBOARD CUTTING UNITS

Type: Two, three-spindle, side-mounted rotary cutting units, each with a 145 cm width of cut.

Trimming Ability: Trims to either side. 147cm cutting unit is offset from the outside of the wheel to trim the side of side cutting units.

Height-of-Cut Adjustment: 12.7 mm increments by spacers on all castor shafts.

Cutter Drive: Hydraulic gear motor. Three “B” section belts to spindles.

Castor Wheels: Four 10.50 x 3.50 heavy-duty, interchangeable, pneumatic castor wheels.

Cutting Unit Suspension: Outboard cutting unit arms pivot from the center, sweep the cutting units forward in mow and lift, and rotate the cutting units down and back when in transport. Arms have rubber mount design for shock absorption and more cutting unit floatation (patented). Adjustable, spring-loaded, breakaway arms release and rotate outboard cutting unit upon accidental impact. Automatically reset when cutting unit is raised. Cam lock links automatically secure outboard cutting units in transport position.

Machine Width (Approx.):
Transport—241 cm.
Mow—495 cm.

Machine Height (Approx.):
Transport—231 cm—to the top of raised cutting units.

Mow—152 cm—to top of seat back.

Machine Overall Length (Approx.): 427 cm.

Total Weight (with fluids) [Approx.]: 2967 kg.

Accessories:
2-Post Roll-Over Protection System
Canopy option
Canopy w/windshield option
Cab with Roll-Over Protection System
Road Light Package
244 cm Rotary Broom
Air Conditioning
7-Foot Snow blower

Leaf Mulcher
Cold Start Kit
Foam Filled Castor Tires
Extra Traction Drive Tire**Specifications and design subject to change without notice.**

Before Operating

CAUTION

Wear safety goggles and rubber gloves when working with the batteries. Charge batteries in a well-ventilated place so the gases produced while charging can dissipate. Since the gases are explosive, keep electrical sparks and open flames away from the batteries. Do not smoke. Nausea may result if the gases are inhaled. Unplug the charger from the electrical outlet before connecting to or disconnecting charger leads from the battery posts.

CHECK BATTERIES (Initial preparation)

1. Unlatch the hood and left-hand engine side panel (Fig. 1). Raise and prop the hood open and remove the left side panel. Make sure the hood prop is secured in one of the mounting brackets on the hood.

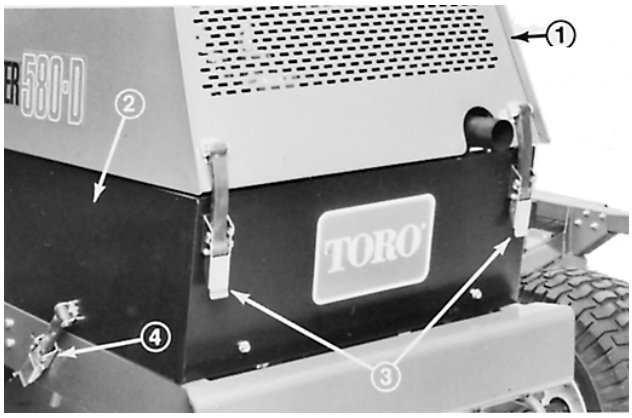

Figure 1

1. Engine hood
2. Left side panel
3. Hood latches
4. Side panel latch

2. Remove the capscrews securing the battery tray and slide the tray out (Fig. 2).

3. Check both batteries for charge with a hydrometer. If the batteries check acceptably, slide the tray back in place, secure it with capscrews and lockwashers and install the side panel. If the batteries require charging, go to step 4.

4. Remove the negative (–) battery cables from the batteries (Fig. 2). Connect a 3- to 4-amp battery charger to the posts. Charge the batteries at a rate of 3 to 4 amperes for 4 to 8 hours.

5. When the batteries are fully charged, disconnect the charger from the electrical outlet and battery posts.

6. Install the negative (–) cable ends, slide the tray back in place, secure it with capscrews and install the side panel.

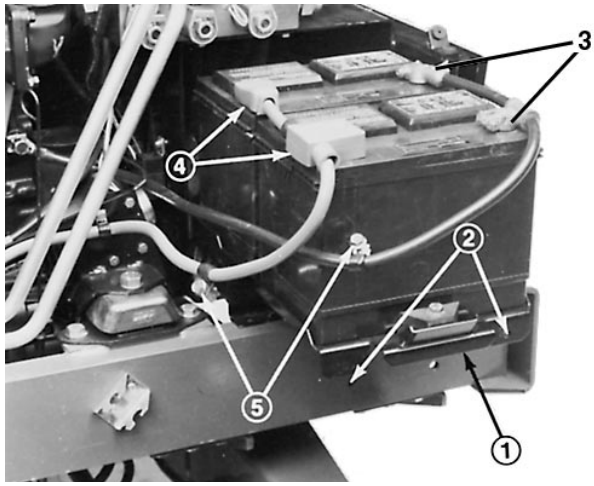

Figure 2

1. Battery tray
2. Tray mounting holes
3. Negative (–) connections
4. Positive (+) connections
5. Battery tray mounting screws

CHECK ENGINE OIL (DAILY)

The engine is shipped with 10L of oil in the crankcase. However, check the oil level before and after the engine is first started.

1. Be sure the machine is positioned on a level surface.

2. Unlatch the hood and raise and prop it open (Fig. 1). Make sure the hood prop is secured in one of the mounting brackets on the hood.

3. Remove the dipstick, wipe it with a clean cloth (Fig. 3) and insert it into the tube until it is fully seated. Remove the dipstick from the tube and check the oil level. If the oil level is low, remove the filler cap (Fig. 4). Add oil until the level is to the top notch on the dipstick. DO NOT OVERFILL.

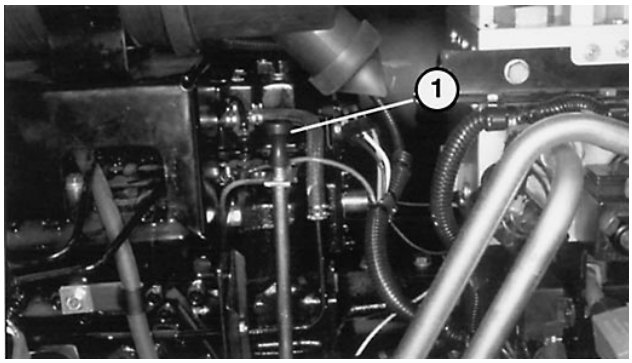

Figure 3

1. Dipstick

The engine uses any high-quality detergent oil having the American Petroleum Institute—API—"service classification" CD. Oil viscosity recommendations are:

AMBIENT TEMPERATURE	PROPER VISCOSITY
–28.9° to –6.7°C	SAE 10
–6.7° to 40.6°C	SAE 30
40.6° C and up	SAE 40

Note: Do not use multi-viscosity oils.

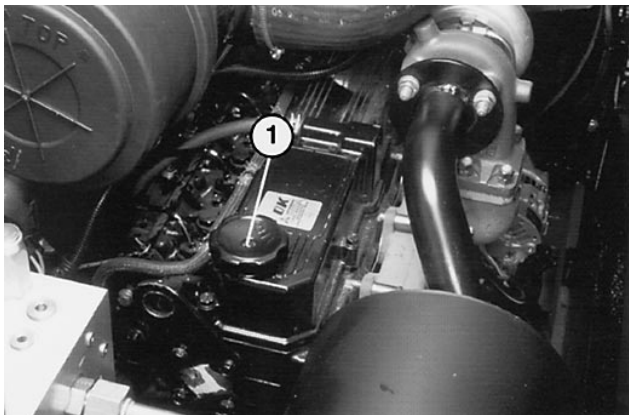

Figure 4

1. Engine Oil Fill Cap

IMPORTANT: Check oil after every 5 hours operation, or daily. Change the oil and filter after the first 50 hours, then change both every 100 hours operation thereafter. Change the oil and filter more often when the engine is operated in extremely dusty or dirty conditions.

5. Insert the dipstick into the tube and close and latch the hood.

CHECK THE COOLING SYSTEM (DAILY)

The cooling system is filled with a 50/50 solution of water and permanent ethylene glycol anti-freeze. Check the coolant level at the beginning of each day before starting the engine. Capacity of the cooling system is 14.7 L.

CAUTION

The best time to check the coolant level is each day before the engine has been started because the coolant system has not been pressurized. When the engine is hot and the radiator cap is removed, pressurized coolant can escape and cause burns. If engine coolant is hot, slowly and carefully remove the radiator cap.

1. Unlatch, raise and prop the hood open. Make sure the hood prop is secured in one of the mounting brackets on the hood.

2. Remove the radiator cap (Fig. 5). Coolant level must be above the radiator core and about 25mm below the bottom of the filler neck.

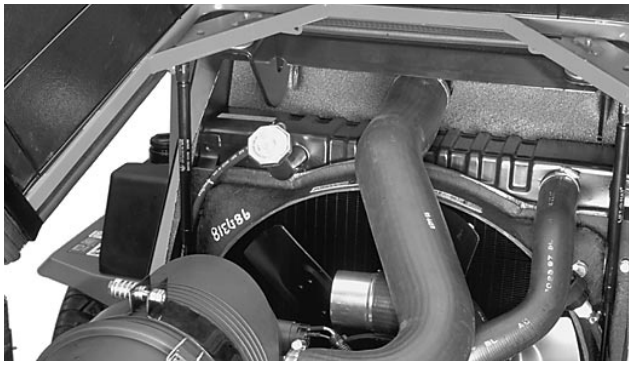

Figure 5

1. Radiator Cap

3. If coolant level is low, add a 50/50 mixture of water and ethylene glycol anti-freeze. **DO NOT USE ALCOHOL/METHANOL-BASE COOLANTS OR WATER ONLY. DO NOT OVERFILL.**

4. Install the radiator cap, close and latch the hood.

CHECK HYDRAULIC SYSTEM FLUID (DAILY)

1. Fluid level should be checked daily through the sight glass at the rear of the hydraulic reservoir (Fig. 6). When oil is cold, the level will be slightly below center, but it should be in the middle of the sight glass when the oil is warm.

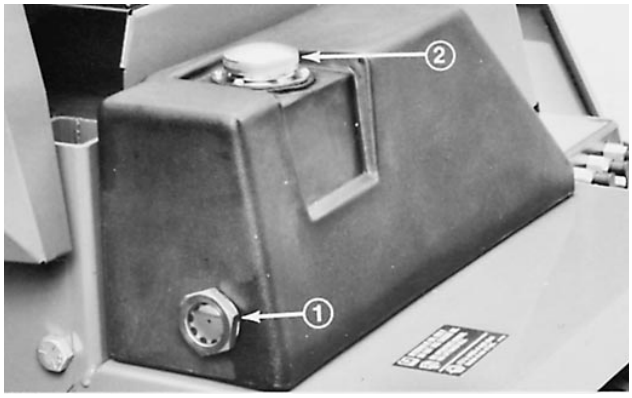

Figure 6
1. Hydraulic Oil Level Sight Glass
2. Reservoir Fill Cap

2. If the oil level is low, add hydraulic oil to the reservoir (Fig. 6); refer to Machine Fluid Recommendations.

FILL THE FUEL TANK

DANGER

Because diesel fuel is flammable, use caution when storing or handling it. Do not smoke while filling the fuel tank. Do not fill fuel the tank while engine is running, hot, or when the machine is in an enclosed area. Always fill the fuel tank outside and wipe up any spilled diesel fuel before starting the engine. Store fuel in a clean, safety-approved container and keep the cap in place. Use diesel fuel for the engine only; not for any other purpose.

1. Remove the fuel tank cap (Fig. 7).

2. Fill the tank to about 25mm below bottom of filler neck with No. 2 diesel fuel. Install the cap.

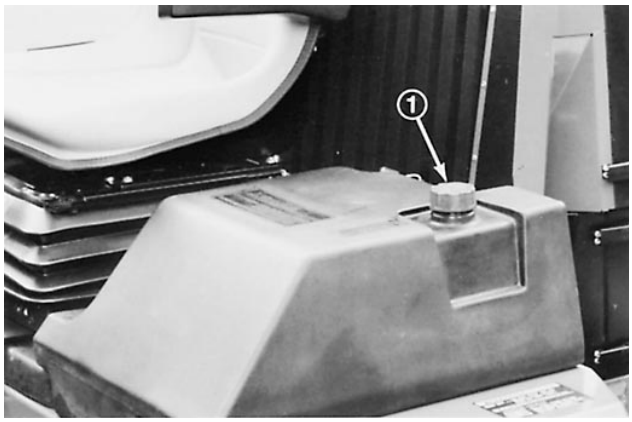

Figure 7
1. Fuel Tank Cap

CHECK TIRE PRESSURE (DAILY)

Since the Groundsmaster 580-D can be operated under many different turf conditions, proper tire pressure is important. Use the following as a guide:

Under Normal mowing conditions and when used on a wide variety of turf grasses—103.4 kPa front; 89.6 kPa rear. 344.7 kPa castors.

When turf is wet and softer than normal—use low pressure: 82.7 kPa front and 62 kPa rear.

When turf is dry and harder than normal, use higher tire pressure: 124 kPa front and rear.

IMPORTANT: Do not operate in HIGH RANGE for extended periods when tire pressure is less than 18 psi because tires may be damaged. When tire pressure exceeds 18 psi, HIGH RANGE may be used.

CHECK SYSTEMS OPERATION (DAILY)

Start the engine. Move the Groundsmaster 580-D, slowly to an area where the machine can be checked for proper function. Check operation of controls, safety interlock system, engine, hydraulic system, brakes and cutting units. Refer to the Know Your Controls and Operating Instructions sections for proper procedures.

CHECKING CUTTING UNIT MISMATCH

To assure all cutting units are at the same height of cut:

1. Adjust all cutting units to the highest height of cut.

Position all castor arm height-of-cut spacers to on the underside of the castor arms. Do not move washers. Leave them in their original position.

Note: Unless all castor wheel axles are not in the same location, axles do not have to be relocated. All, however, must be in the same holes (Fig. 8).

2. Place a flat sheet of plywood at least 2mm thick and at least 1.2m x 2.4 m on a level surface and lower the cutting unit onto the plywood.

3. Taking each cutting blade in turn, position the blade so it faces fore and aft. Measure from plywood to the front tip of the cutter blade and record dimension. All blade heights on the same deck should be within 6.3 mm of one another. If blade heights meet criteria, proceed to step 5. If blade heights are not within 6.3 mm, proceed to step 4.

4. To match cutting blade height, transfer washers from one side of a castor wheel arm to the other. If end is to be lowered, transfer one or both washers from the underside to the top. By contrast, if end is to be raised, transfer washer(s) from the top to the underside. Each washer is 3 mm thick. Repeat measurement of blade tip height and record new dimensions.

5. Repeat steps 2–3 on the remaining cutting units, and step 4, if necessary. If washers are transferred on a outboard cutting unit castor arm, be sure to transfer the same number on both ends of the castor arm.

6. Compare blade height dimensions of all cutting units. Blade heights must be within 9.5 mm of one another. If they are not, determine which cutting unit height can be changed to compensate for difference and either transfer washers from bottom to top to lower unit, or from top to bottom to raise. Transfer an equal number of washers at all castor wheel locations to keep cutting unit level -two on front unit, four on outboard units.

ADJUSTING HEIGHT OF CUT

The height of cut is adjustable from 25 to 140 mm in 13mm increments. Positioning the castor wheel axles in the top holes of the castor forks (Fig. 8) allows low-range height-of-cut settings from 25 to 102 mm; positioning the castor wheel axles in the lower holes of the castor forks (Fig. 8) allows high-range height-of-cut settings from 63.5 to 140 mm.

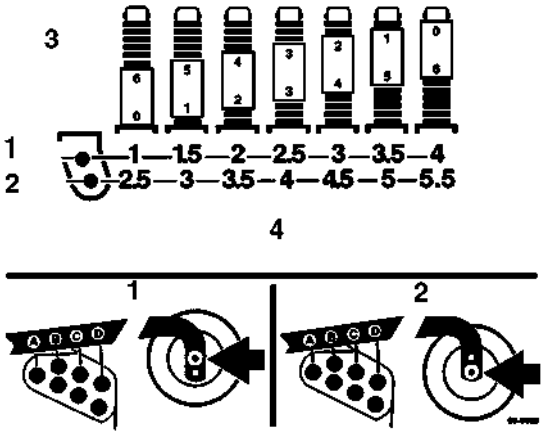

Figure 8

1. Low range
2. High range
3. Spacers
4. Height of cut

1. Start the engine, position the machine on a level surface, lower the cutting units to a point where the castor wheels can be removed from the arms, set the lift levers in neutral, set the parking brake and shut off the engine. Remove the ignition key to prevent accidental startup.

2. Position the castor wheel axles on all cutting units in the same hole in the castor forks.

3. On the front cutting unit, remove the hairpin cotter and clevis pins from the rear castor pivot arms (Fig. 9). Align the pivot arm holes with selected height-of-cut bracket holes in the deck frames, insert the clevis pins and install the hairpin cotters (Fig. 9).

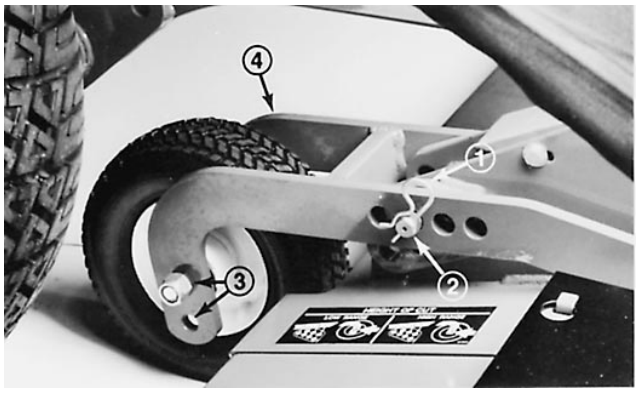

Figure 9

1. Hairpin cotter
2. Clevis pin
3. Castor axle mount holes
4. Pivot arm

4. On all remaining castor wheel assemblies, remove the lynch pin from the castor fork shafts (Fig. 10).

Remove the castor fork shaft and spacer assembly from the castor arm (Fig. 10). Place spacers onto the castor spindle to the desired height-of-cut setting and install the castor fork shaft in arm (Fig. 9). Install the remaining spacers onto the shaft and secure the assemblies with the lynch pin (Fig. 10).

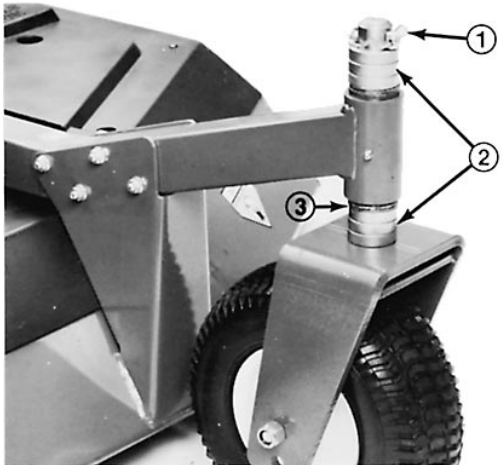

Figure 10

1. Lynch pin
2. Spacers
3. Washers

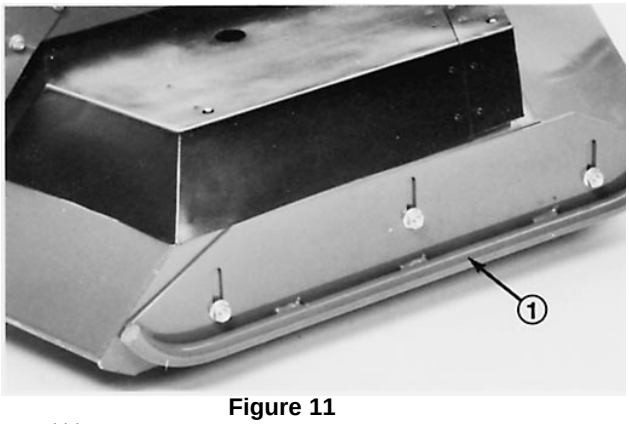

Figure 11

1. Skid

ADJUSTING SKIDS

After the initial set up or if height of cut is changed, deck skids should also be adjusted. Adjust skids by loosening the flange lock nuts (Fig. 11), positioning the skid at the specified height (see chart) and re-tightening the flange lock nuts.

Front Cutting Unit

All height of cut—0.95cm to 1.2 cm above level surface

Outboard Cutting Units

2.5 cm height of cut—Skid positioned all the way up

3.8 cm to 7.6 cm height of cut—Skid positioned 1.2 cm to 2.5 cm above level surface.

7.6 cm and above height of cut—Skid positioned all the way down,

Controls

Seat (Fig. 12)—Pull the seat adjusting lever (right side) outward, slide the seat fore or aft to the desired position and release the lever to lock the seat in position. The seat moves 15 cm fore and aft in 15mm increments. The knob at the lower center provides variable weight adjustment from 49.9–129.3 kg.

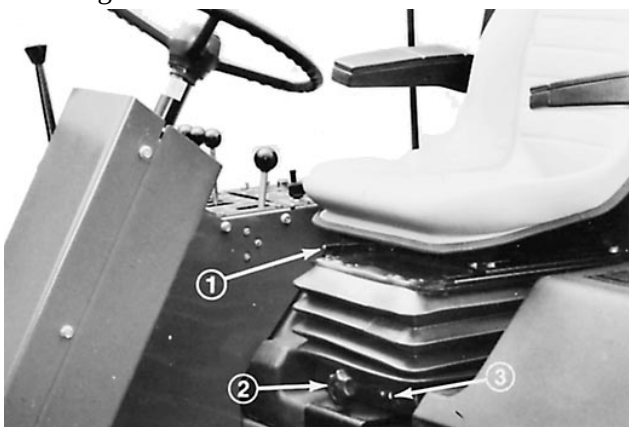

Figure 12

1. Seat adjusting lever
2. Weight adjusting knob
3. Weight indicator

Seat height adjusts vertically to three positions. To raise: lift the seat to the first or second click stop; to lower: lift the seat to the highest position, then lower it to the lowest position. The arm rests pivot up and down.

Warning Light Check Switch (Fig. 13)—Before beginning operation, press the switch button. All lights on the control panel should light. If a light fails to illuminate, there is an electrical malfunction requiring immediate repair.

Engine Oil Pressure Warning (Fig. 13)—Dangerously low engine oil pressure is indicated by both a warning indicator light and an audible signal. When this occurs, stop the engine immediately avoid engine damage.

No Charge Warning (Fig. 13)—No charge to the batteries is indicated by a warning indicator light and audible signal.

Fuel System Warning (Fig. 13)—A warning indicator light and audible signal warn of water in the fuel and need for service.

Coolant Temperature Warning (Fig. 13)—If engine coolant temperature exceeds 101° C, a warning indicator light illuminates and an audible signal sounds. If coolant temperature exceeds 110° C, the engine automatically shuts down. The switch resets automatically when the system and engine cool down.

Hour Meter (Fig. 13)—Registers accumulated hours of engine operation, which is useful for determining intervals for service maintenance and lubrication.

Coolant Temperature Gauge (Fig. 13)—Indicates the temperature of system coolant.

Fuel Gauge (Fig. 13)—Indicates the quantity of fuel in the fuel tank.

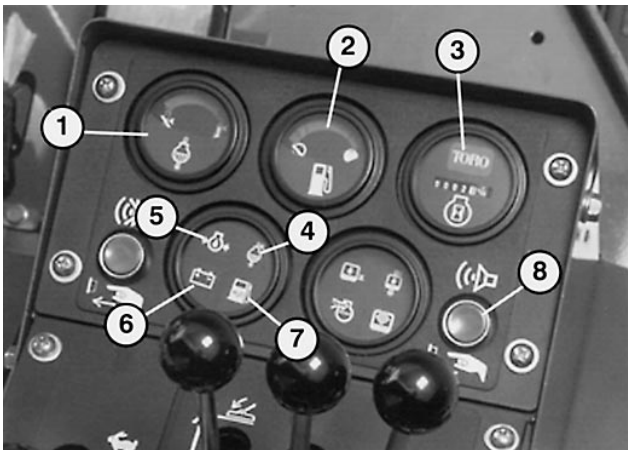

Figure 13

1. Coolant temperature gauge
2. Fuel gauge
3. Hour meter
4. Coolant temperature warning
5. Engine oil pressure warning
6. No charge warning
7. Fuel system warning
8. Warning light check switch

Hydraulic Oil Temperature Warning (Fig. 14)—A warning indicator light and audible signal warn of excessively high hydraulic oil temperature.



Figure 14

1. Hydraulic oil level warning
2. Hydraulic oil temperature warning
3. Hydraulic oil filter warning
4. Air cleaner warning
5. Alarm silence button

Hydraulic Oil Filter Warning (Fig. 14)—A warning indicator light and audible signal warn the filter is clogged and needs service.

Hydraulic Oil Level Warning (Fig. 14)—A warning indicator light and audible signal warn of low hydraulic oil level. If the oil level drops further, the engine will automatically be stopped. The engine cannot be restarted until the oil supply is brought to a safe level.

Air Cleaner Warning (Fig. 14)—A warning indicator light and audible signal warn of a clogged air cleaner requiring service. These warnings alert that the engine has been operated beyond when normal filter maintenance should have occurred.

Alarm Silence Button (Fig. 14)—Pressing the button silences the alarm. The alarm system will disengage and automatically reset when the problem is corrected.

Parking Brake Indicator (Fig. 15)—Located on the steering column, it alerts the operator that the parking brake is on.

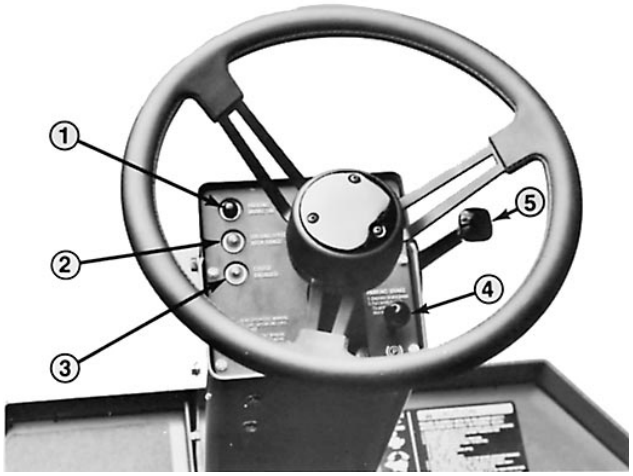

Figure 15

1. Parking brake indicator
2. High-range speed mode indicator
3. Cruise control engaged indicator
4. Parking brake knob
5. Tilt steering control lever

High-Range Ground Speed Indicator (Fig. 15)—Located on the steering column, it alerts the operator the Groundsmaster 580-D is in high-range ground speed mode.

Cruise Control Indicator (Fig. 15)—Located on the steering column, it alerts the operator that the cruise control is engaged.

Tilt Steering Control (Fig. 15)—A lever on the right side of the steering column. Pivot the lever rearward to release and move the steering column and tower to the desired angle. Pivot the lever forward to lock the steering column and wheel in the desired position.

Key Switch (Fig. 16)—Three positions: OFF, ON and START. Turn the key to START and release it when the engine begins running. To stop, turn the key to the OFF position.

Throttle Control (Fig. 16)—Used to operate the engine at various speeds. Moving the throttle forward increases engine speed—FAST, rearward decreases engine speed—SLOW.

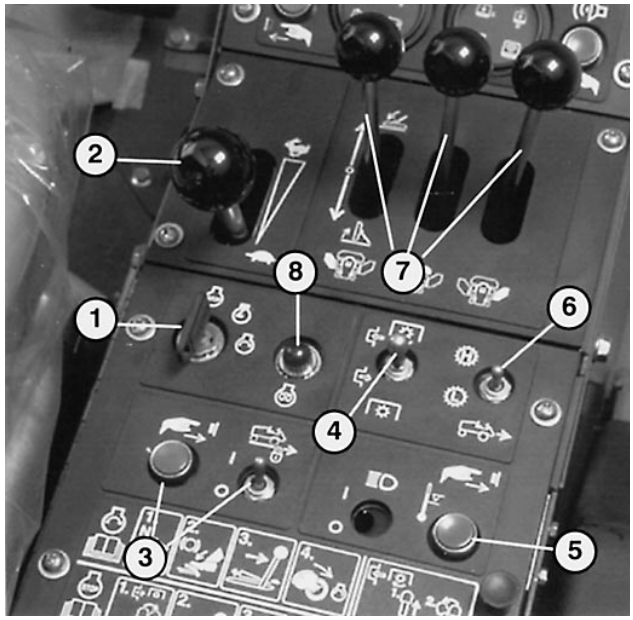

Figure 16

1. Key switch
2. Throttle control
3. Cruise control switches
4. Deck drive/PTO switch
5. Engine override switch
6. High-Range/ Low-Range ground speed switch
7. Cutting unit lift controls
8. Glow plug indicator light

Cruise Control Switches (Fig. 16)—Two switches on the panel to the right of the operator; one for ON/OFF control, the other for cruise engagement. Cruise control operation, when in either high-range or low-range mode, is disengaged either by actuating the brake pedal or by turning the switch to the OFF position.

High-Range/Low-Range Ground Speed Switch (Fig. 16)—A lever that allows selection of either high- or low-range ground speeds. Push the switch forward for High-Range or pull back for Low-Range. The switch returns to the neutral position. The switch automatically resets to Low Range when a cutting unit is lowered, the front cutting unit is not fully raised, or if the engine is shut off.

Cutting Unit Lift Controls (Fig. 16)—The two outside levers raise and lower the outside cutting units; the center lever raises and lowers the front unit. The engine must be running to lower and raise cutting units. Cutting unit blades automatically stop whenever the cutting units are raised. When lowering outside cutting units, keep the control levers actuated until the cutting units pass over the center. Units will then "float" down to the turf.

Note: Holding the cutting unit levers in the actuated position while the units are lowering could drive them forcefully into the turf and cause cutting unit damage. After lowering the mowers, do not allow the levers to snap back to neutral. This could cause the levers to go past neutral, lock the cutting units in a non-float mode and prevent them from following turf contours.

Glow Plug Indicator (Fig. 16)—Automatically actuates the proper glow period when the ignition key is turned to the ON position. Illuminates when glow plugs are actuated. When glow plugs are heated sufficiently, the light goes off, indicating the engine is ready to start.

Deck Drive/PTO Switch (Fig. 16)—Pull the sleeve upward on the switch lever and push the lever to the ENGAGE position and release it to actuate the switch; the lever will move to the neutral position when released. Move the lever to the DISENGAGE position to stop. The switch automatically resets to DISENGAGE when all three cutting units are raised or the engine is shut off.

Engine Over-ride Switch (Fig. 16 & 17)—If the engine has overheated and been shut-down by the safety switch, depressing the button will allow engine operation. Use the button only for emergencies and only at short intervals.

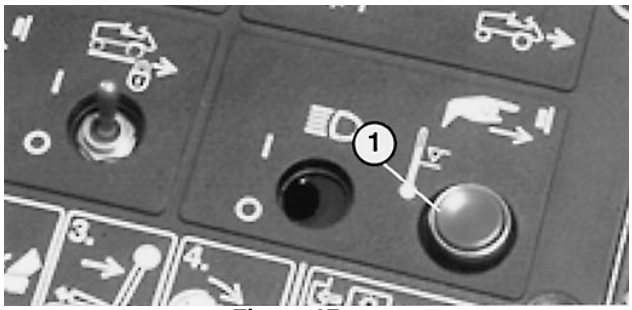

Figure 17

1. Engine over-ride switch

Electrical System—Fuse block (Fig. 18)—The electrical system is protected by one 5 Amp and two 15 Amp fuses located under the control panel to the operator's right. A fusible link, located by starter, is incorporated for the protection of the entire wiring circuit. The link can be replaced if total loss of electrical function results. However, the reason for the malfunction should first be found and corrected.

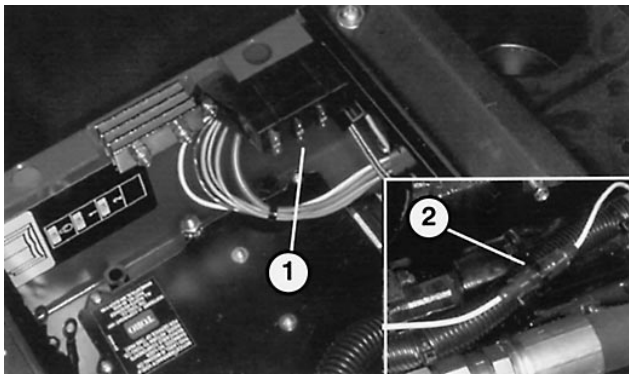

Figure 18

1. Fuse b lock
2. Fusible link

Traction Pedal (Fig. 19)—Controls forward and reverse operation. Depress the top of the pedal to move forward and the bottom to move in reverse. Ground speed depends on high-range/low-range ground speed mode (slower in low than high range) and proportionate to how far the pedal is depressed.

Steering/Parking Brake Pedals (Fig. 19)—The left and right turn pedals are connected to the front wheel brakes. Since both brakes work independently, they can be used to turn the machine more sharply or to increase traction if one wheel tends to slip while operating on a hillside. However, wet grass or soft turf can be damaged when brakes are used for turning. A brake latch lever locks the two pedals together for parking. Whenever the engine is shut off, set the parking brake to prevent accidental machine movement. Latch the pedals together, depress them and pull the parking brake knob at the top of the steering tower up (Fig. 15). Depress the brake pedals to release the parking brake.

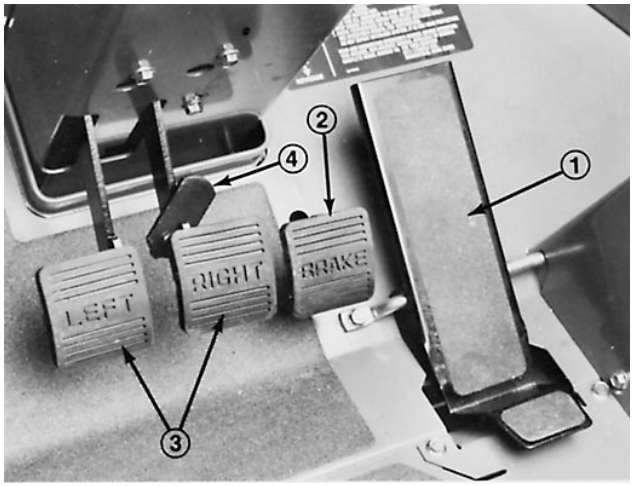

Figure 19

1. Traction pedal
2. Brake pedal
3. Steering/parking brake pedals
4. Brake latch lever

Brake Pedal (Fig. 19)—A pedal operated by the right foot actuates fully enclosed, multiple-disc front brakes.

Note: There is dynamic braking through the closed-loop hydrostatic traction drive system.

Storage (Fig. 20)—A large removable tool storage tray is located under a hinged floor plate. A small storage and beverage holder is to the operator's right.

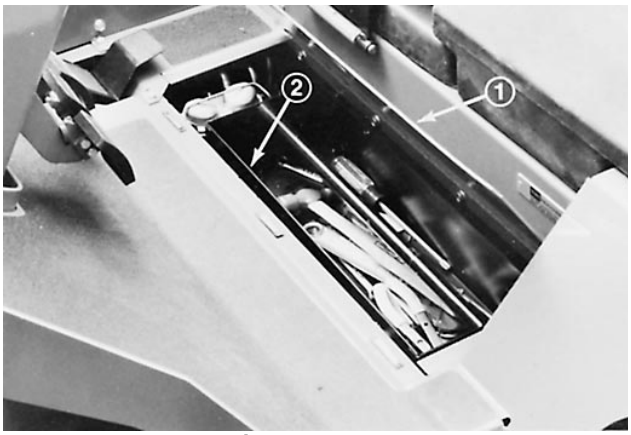

Figure 20

1. Hinged floor plate
2. Removable tool tray

Operation

IMPORTANT. The fuel system must be bled if any of the following have occurred:

A. Initial start-up of a new machine.

B. Engine has ceased running due to lack of fuel.

C. Maintenance has been performed on fuel system components; i.e., filter replaced, separator serviced, etc.

Refer to *Bleeding The Fuel System*.

STARTING/STOPPING THE ENGINE

1. Sit on the seat, keep your foot off the traction pedal, and ensure the parking brake is engaged. Set the seat and tilt the steering wheel and tower to a comfortable position before starting the engine.

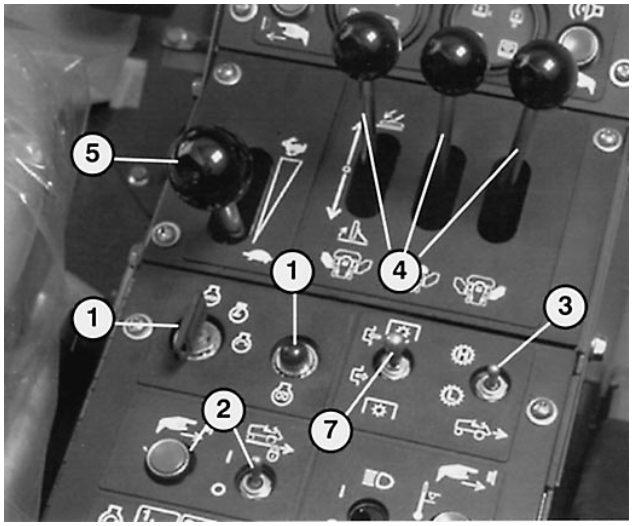

Figure 21

1. PTO switch
2. Cruise control switches
3. HIGH/LOW Range switch
4. Cutting unit lift controls
5. Throttle lever
6. Ignition key switch
7. Glow plug indicator light

2. Turn the ignition switch to the ON position. When the glow plug indicator light goes off, the engine is ready to START.

3. Turn the ignition key switch to the START position (Fig. 21). Release the key immediately when the engine starts and allow it to return to the RUN position.

Note: Do not run the starter motor more than 10 seconds at a time or premature starter failure may result. If the engine fails to start after 10 seconds, turn the key to the OFF position. Recheck controls and procedures, wait 10 additional seconds and repeat starting operation.

4. When the engine is first started, or after overhaul of the engine, hydrostatic transmission, steering or wheel drive, operate the machine in forward and reverse for one to two minutes. Turn the steering wheel left and right to check steering response and operate the lift levers to check for proper operation. Then, shut off the engine, set the parking brake and check for oil leaks, loose parts or other malfunctions.

CAUTION

Shut off the engine and wait for all moving parts to stop before checking for oil leaks, loose parts or other difficulties.

5. Before stopping the engine, move the HIGH/LOW RANGE ground speed switch to LOW, disengage the PTO and cruise control switches and move the lift levers and traction pedal to neutral. Move the throttle control to the SLOW position. Set the parking brake and turn he ignition key to the OFF position.

BLEEDING THE FUEL SYSTEM

1. Unlatch, raise and prop the engine hood open and remove the left side panel (Fig. 22).

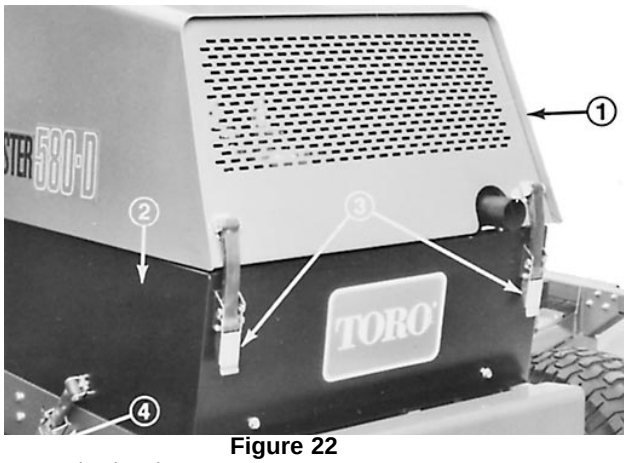

Figure 22

1. Engine hood
2. Left side panel
3. Glow plug indicator light
4. Side panel latch

2. At the lower left side of the engine, loosen the air bleed screw at the top of the fuel filter/water separator (Fig. 23).

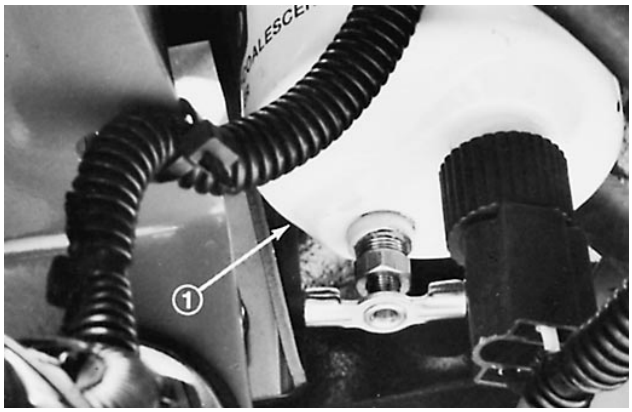

Figure 23

1. Fuel filter/water separator

Note: If the fuel tank is over half full, gravity will fill the fuel filter. If the tank is less than half full, fill it.

3. Loosen the air vent plug on the engine fuel filter assembly about 1-1/2 turns (Fig. 24).

4. Rotate the priming pump (Fig. 25) counter-clockwise until the spring in the pump assembly releases. Operate the pump up and down until a solid stream of fuel flows out around the filter plug and tighten the plug.

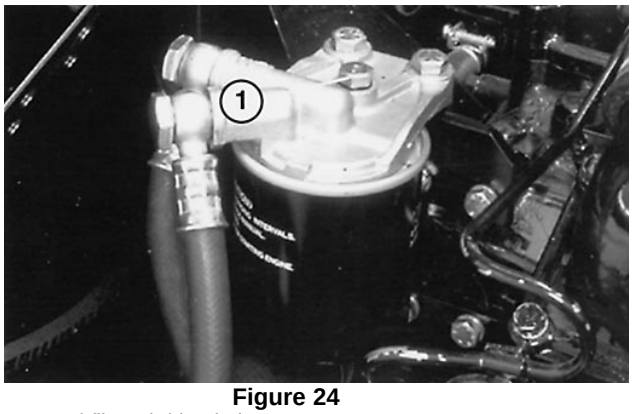

Figure 24

1. Fuel filter air bleed plug

5. Loosen the air vent plug on the injection pump about 1-1/2 turns (Fig. 25). Operate the priming pump until a solid stream of fuel flows from the vent hole (Fig. 25), then tighten the air vent plug.

6. Push the priming pump down to compress the spring then turn it clockwise to lock it closed.

7. Try to start the engine. If the engine starts, install the left side panel, lower the hood and resume operation. If the engine does not start, repeat steps 2–7.

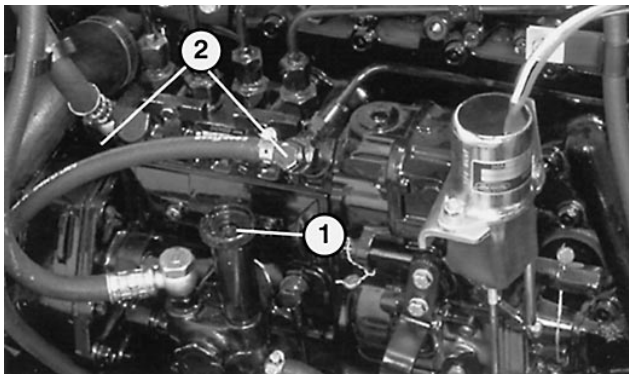

Figure 25

1. Priming pump
2. Injection pump air bleed plug

DIAGNOSTIC LIGHT

The GM 580-D is equipped with a diagnostic light that indicates whether the electronic controller is functioning correctly. The light is located under the control panel. When the electronic controller is functioning correctly and the key switch is moved to the ON position, the controller diagnostic light will be illuminated. The light will blink if the controller detects a malfunction in the electrical system. The light will stop blinking and automatically reset when the key switch is turned to the OFF position.

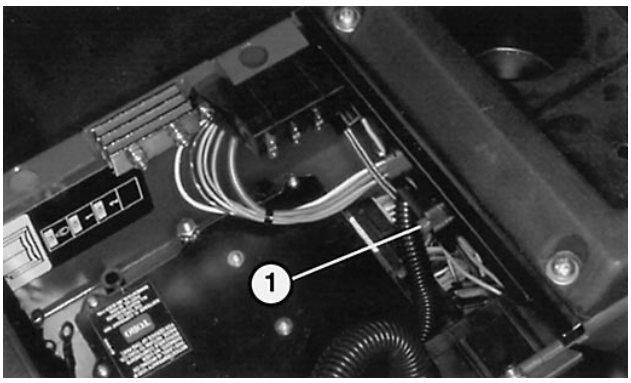

Figure 26
1. Electronic controller light

When the controller diagnostic light blinks, one of the following outputs has been detected in the controller:

1. One of the outputs has been shorted.
2. One of the outputs is open circuited.

Using the diagnostic display, determine which output is malfunctioning; refer to Checking Interlock Switches.

If the diagnostic light is not illuminated when the key switch is in the ON position, this indicates that the electronic controller is not operating. Possible causes are:

1. The loopback is not connected.
2. Fuses are blown.
3. The light is burned out.
4. Not functioning correctly.
5. Fusible links are blown

Check electrical connections, input fuses and the diagnostic light bulb to determine malfunction. Make sure the loopback connector is secured to the wire harness connector.

Note: If the diagnostic light flashes during normal operation of the machine, do not turn off the machine, toggle to the output and touch any switch. The LED will flash, indicating the source of the failure.

DIAGNOSTIC ACE DISPLAY

The GM 580-D is equipped with an electronic controller that controls most machine functions. The controller determines which function is required for various input switches (i.e., seat switch, key switch, etc.) and turns on the outputs to actuate solenoids or relays for the requested machine function.

For the electronic controller to control the machine as desired, each of the input switches, output solenoids and relays must be connected and functioning properly.

The Diagnostic ACE display is a tool to help the user verify the correct electrical functions of the machine.

CHECKING INTERLOCK SWITCHES

The purpose of the interlock switches is to prevent the engine from cranking or starting, unless the traction pedal is in NEUTRAL, to ensure the cutting units disengage when raised or when the operator leaves the seat. In addition, the engine will stop when the traction pedal is depressed when the operator is not seated.

To verify interlock switch function:

CAUTION

The interlock switches are for the protection of the operator and bystanders, and to ensure correct operation of the machine, so do not bypass or disconnect them. Check operation of the switches daily to assure the interlock system is operating. If a switch is defective, replace it before operating. The controller has the ability to detect bypassed switches and may prevent the operation of the machine if switches are bypassed. Do not rely entirely on safety switches—use common sense.

1. Park the machine on a level surface, lower the cutting units, stop the engine and engage the parking brake.

2. Open the control panel cover. Locate the wire harness and connectors near the controller. Carefully unplug the loopback connector from the harness connector (Fig. 27).

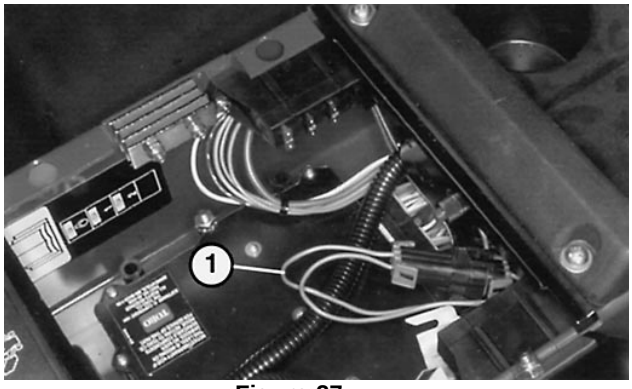

Figure 27
1. Wire Harness and Connectors

3. Connect the Diagnostic ACE display connector (Fig. 28) to the harness connector. Make sure the correct overlay decal is positioned on the Diagnostic ACE display.

4. Turn the key switch to the ON position, but do not start the machine.

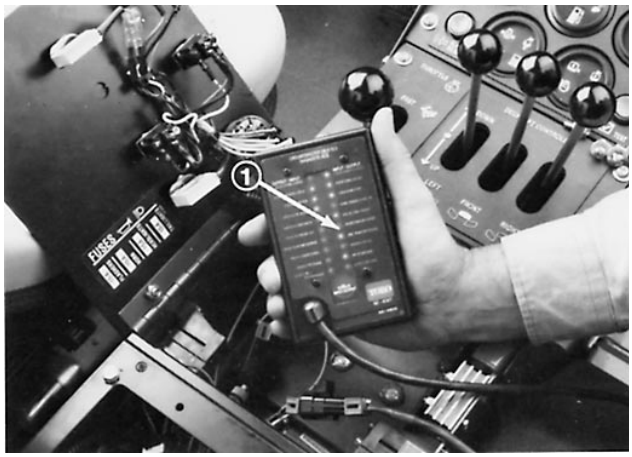

Figure 28
1. Diagnostic ACE

Note: The red text on the overlay decal refers to input switches and the green text refers to outputs.

5. The “inputs displayed” LED, on lower right column of the Diagnostic ACE, should be illuminated. If 11 outputs displayed” LED is illuminated, press the toggle button, on Diagnostic ACE, to change LED to “inputs displayed”.

6. The Diagnostic ACE will illuminate the LED associated with each of the inputs when that input switch is closed.

Individually, change each of the switches from open to closed (i.e., sit on the seat, engage the traction pedal, etc.), and note that the appropriate LED on Diagnostic ACE will blink on and off when corresponding switch is closed and opened. Repeat on each switch that it is possible to be changed by hand.

7. If the switch is closed and appropriate LED does not blink on and off, check all wiring and connections to the switch and/or check switches with an ohmmeter. Replace any defective switches and repair any defective wiring.

Now start the engine and raise and lower each cutting unit. Note the appropriate LED on the Diagnostic ACE (i.e., LED is illuminated when the cutting unit is lowered and the LED is not illuminated when the cutting unit is raised).

The Diagnostic ACE also has the ability to detect which output solenoids or relays are turned on. This is a quick way to determine if a machine malfunction is electrical or hydraulic.

To verify output function:

1. Park the machine on a level surface, lower the cutting units, stop the engine and engage the parking brake.

2. Open the control panel cover. Locate the wire harness and connectors near the controller. Carefully unplug the loopback connector from the harness connector.

3. Connect the Diagnostic ACE connector to the harness connector. Make sure the correct overlay decal is positioned on the Diagnostic ACE.

4. Turn the key switch to the ON position, but do not start the machine.

Note: The red text on the overlay decal refers to input switches and the green text refers to outputs.

5. The “outputs displayed” LED, on the lower right column of Diagnostic ACE, should be illuminated. If the “inputs displayed” LED is illuminated, press the toggle button on the Diagnostic ACE, to change the LED to “outputs displayed”.

Note: It may be necessary to toggle between “inputs displayed” and “outputs displayed” several times to do the following step. To toggle back and forth, press the toggle button once. This may be done as often as required. DO NOT HOLD the

BUTTON.

6. Sit on the seat and attempt to operate the desired function of the machine. (If you need help verifying the correct input settings for each function, refer to the Logic Chart) The appropriate output LEDs should illuminate to indicate that the ECU is turning on that function. (Refer to the logic chart to be certain of the specified output LEDs).

Note: If any output LED is blinking, this indicates an electrical problem with that OUTPUT Repair/replace defective electrical parts immediately. To reset a blinking LED, turn the key switch "OFF", then back "ON". if no output LEDs are blinking, but the correct output LEDs do not illuminate, verify that all the input switches work by following the instructions on how to verify interlock switches. Verify correct switch function.

If the output LEDs are on as specified, but the machine doesn't function properly, it indicates a non-electrical problem.

Note: Due to electrical system constraints, the output LEDs for "START", "MONITOR" and "ETR/ALT" may not blink, even though an electrical problem may exist for those functions. If the machine problem appears to be with one of these functions, check the electrical circuit with a volt/ohmmeter to verify that no electrical problem exists to these functions.

If the electronic controller experiences an output failure for either the cruise control or one of the cutting units, the controller will disable the machine function. Indications that this is the cause of the problem include:

A. Flashing green diagnostic light.

B. Diagnostic ACE will illuminate the "output fail" LED.

C. Diagnostic ACE will flash which output failed.

D. Machine will not respond to ignition key inputs.

The above indicates an ECU problem, contact your local authorized TORO distributor for assistance.

If each output switch is in the correct position and functioning correctly, but the output LEDs are not correctly illuminated, this indicates an ECU problem. If this occurs, contact your Toro distributor for assistance.

IMPORTANT: The Diagnostic ACE display should not be left connected to the machine. It is not designed to withstand the environment of the machine's everyday use. When you are finished using the Diagnostic ACE, disconnect it from the machine and reconnect the loopback connector to the harness connector. The machine will not operate without the loopback connector installed on the harness. Store the Diagnostic ACE in dry, secure location in the shop, not on the machine.

CHECK WARNING INDICATOR LIGHTS

Each day, before operating assure all warning lights are functioning:

1. Sit on the seat and apply the parking brake. Turn the ignition key ON and push the TEST button. All lights should illuminate.

2. If a light fails to illuminate, replace the bulb and test again.

PUSHING OR TOWING THE MACHINE

In an emergency, the Groundsmaster 580-D can be moved by the following methods:

A. Actuate the by-pass valve in the hydraulic pump and push or tow the machine.

B. Unlock the front hubs and tow the machine.

Pump By-pass Method (short distances only)

CAUTION

There is no effective braking of the Groundsmaster 580-D if the wheel hubs are disengaged. Unless it is on a level surface or the wheels are blocked, the machine will move freely. Do not unlock the wheel hubs without either blocking the wheels or connecting the machine to a towing vehicle with a rigid towing device.

IMPORTANT: Do not push or tow the machine faster than 3–4.8 km/hr because internal transmission damage

may occur. The by-pass valve must be open whenever the machine is pushed or towed by this method. TORO does not recommend this process be used as standard procedure.

1. The by-pass valve is located on the left side of the pump (Fig. 29). Rotate the valve 1/2 to 1 turn counter- clockwise to open it and allow oil to bypass internally. Because fluid is bypassed, the machine can be moved—slowly—without damaging the transmission.

2. Rotate the valve clockwise until it is securely seated before starting the engine. However, do not exceed 7–11 Nm torque to close the valve.

   IMPORTANT: Running the engine with the by-pass valve open will cause the transmission to overheat.

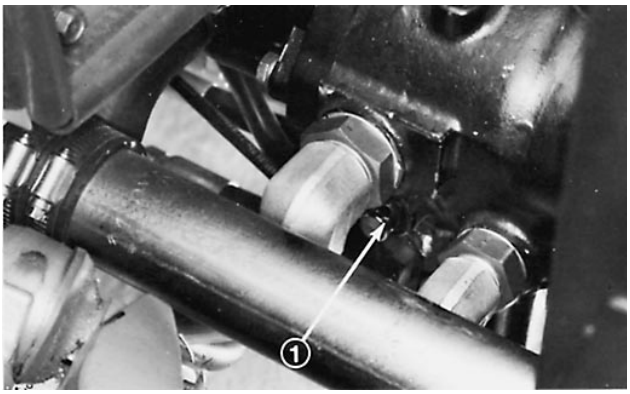

Figure 29

1. By-pass valve

Unlocked Hub Method

1. Either block the wheels or connect the machine to a towing vehicle with a rigid towing device.

2. Remove the bolts securing the disengage covers to

DANGER

The vehicle will roll with the front wheel hubs disengaged. The vehicle must be on a level surface or wheels must be blocked. There is no effective braking with the wheel hubs disengaged.

   both front wheel hubs.

3. Face the dimpled portion of the disengaged covers inward and reinstall the covers. The wheel hubs are now unlocked.

4. Lock the wheel hubs immediately after completing towing operations. Remove the covers and reinstall them with the dimpled portion facing away from the wheel hubs.

CAUTION

Do not remove wheel blocks or towing devices until the wheel hubs are securely locked.

OPERATING CHARACTERISTICS

Familiarization—Before mowing for the first time, practice operating in a large, open and relatively level area. Start and stop the engine, operate in forward and reverse in LOW RANGE ground speed. Practice using the cruise control. Lower and raise the cutting units individually and simultaneously. When thoroughly familiar with machine functions, practice operating around trees and obstacles while using the individual wheel brakes. Also operate up and down slopes (IN LOW RANGE).

Note: TORO recommends HIGH RANGE ground speed be used for road travel only (with cutting units up)

Points to consider while operating the traction unit, cutting units or other implements are the hydrostatic transmission, engine speed, load on the cutting blades or other implement components and the importance of the brakes. To maintain adequate power for the traction unit and implement components while operating, regulate the traction pedal position to keep engine rpm high and relatively constant. Good rules to follow are: decrease ground speed as the implement load increases, and increase ground speed as the load decreases.

Warning Systems—If a warning light and audible warning come on during operation, stop immediately and correct the problem before continuing. Serious damage could occur if the machine is operated with an uncorrected problem. However, if the engine stops because of overheating, the emergency over-ride button can be used to operate the engine for short intervals (Fig. 30).

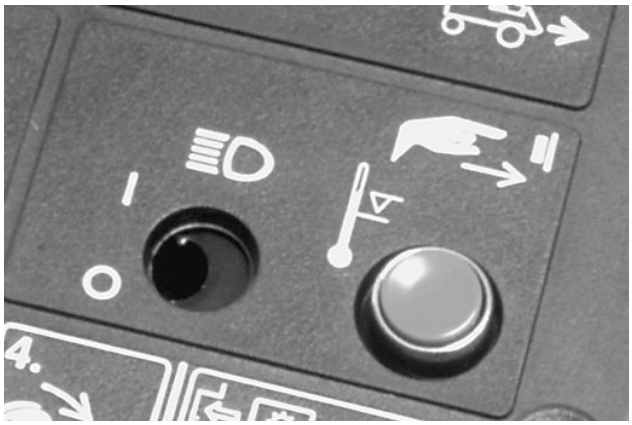

Figure 30

1. Engine over-ride button

Mowing—When approaching the area to mow, position the ground speed selector in LOW RANGE and release it. The switch lever will return to neutral and the High Range light will go out. Move the throttle lever to FAST and lower the cutting units. Pull the sleeve of the deck drive PTO switch up, position it in the ENGAGE position and release it. The lever will return to the neutral position and the PTO automatically engage. Depress the traction pedal slowly to begin cutting operation.

Note: After lowering the mowers, do not allow the levers to snap back to neutral. This could allow the levers to go past neutral, lock the cutting units in a non-float mode and prevent them from following turf contours.

Should either outboard cutting unit contact an immovable object while mowing, the mower lift-arm latch assembly absorbs the impact and breaks away. This allows the cutting unit to swing rearward. Should this occur, stop the machine. Fully raise the cutting unit, then lower it to cutting position. This will allow the lift-arm latch assembly to return to its normal configuration. Be sure to inspect the cutting unit for damage and repair it as necessary before resuming operation.

Caution: This product may exceed noise levels of 85 dB(A) at the operator position. Ear protectors are recommended for prolonged exposure to reduce the potential of permanent hearing damage.

The individual wheel brakes can be used to assist turning the machine. However, use them carefully, especially on soft or wet turf because it may be torn accidentally. The brakes are also beneficial to maintain traction; for example, in some slope conditions, the uphill wheel may slip and lose traction. If this occurs, gradually depress the uphill brake pedal until the uphill wheel stops slipping, thus increasing traction on the downhill wheel.

To stop mowing, depress the brake pedal to stop and disengage the cruise control (if used), move the PTO switch to DISENGAGE and release it (the switch returns to neutral), then fully raise the cutting units.

High-Range Ground Speed Operation—Toro recommends HIGH RANGE ground speed operation be performed only on roads with the cutting units in fully raised position. Start the machine in LOW RANGE, then shift to HIGH RANGE. The HIGH RANGE indicator light will turn ON, indicating the machine is in the HIGH RANGE mode. To cease HIGH RANGE operation, remove your foot from the pedal and apply the brakes. Move the throttle lever to SLOW and position the ground speed selector in LOW RANGE. If the engine begins to labor while climbing an incline, ease off on the traction pedal and shift to LOW RANGE. This will prevent overload of the engine and hydraulic system.

Cruise Control Operation—While operating the machine at the desired ground speed, turn the cruise control switch to ON and press the cruise control actuating button. The traction pedal will be held in its position and a constant ground speed will be maintained. A light on the steering column indicates the cruise control is in operation. Ground speed can be changed by over-riding the traction pedal. The pedal will maintain its new position when the over-riding force is released.

To stop cruise control operation: Turn the cruise control switch to the OFF position or depress the service brake.

Note: Hold the traction pedal in position when stopping cruise control operation; otherwise the machine will stop abruptly due to hydrostatic braking action.

If it is an emergency and becomes necessary to stop suddenly while in cruise control, depress the service brake pedal. This breaks the electrical circuit, returns the traction pedal to neutral, and stops the machine.

Stopping the Machine—To stop the machine and cease operation, take your foot off the traction pedal and apply the brakes. Move the throttle lever to SLOW, the ground speed selector to LOW RANGE and the deck lift controls to neutral. Switch the cruise control to OFF, set the parking brake and turn the ignition key to OFF. Remove the key if the machine is to be left unattended.

Maintenance

LUBRICATION

The following must be lubricated regularly with No. 2 general purpose lithium or molybdenum base grease. The chart below lists service intervals based upon normal operating conditions. However, lubricate more frequently under extreme conditions. The left column numbers correspond with numbers in Fig. 31.

Component	No. of Fittings	Service interval
Center Cutting Unit		
1. Castor Fork Shaft Bushings	2	Every 8 hours or daily
2. Spindle Shaft Bearings	5	Every 50 hours
3. Idler Pulley Bushings	2	Every 50 hours
4. Deck Hinge Pivot Bushings	2	Every 50 hours
Right & Left Hand Cutting Units		
5. Castor Fork Shaft Bushings	8	Every 8 hours or daily
6. Spindle Shaft Bearings	6	Every 50 hours
Front Lift Arm Assemblies		
7. Right and Left Lift Arm	3	Every 50 hours
8. Hydraulic Cylinder Pivot Bushings	4	Every 50 hours
9. Lift Arm Ball Joints	2	Every 50 hours
Outboard Cutting Unit Lift Assemblies		
10. Lift Arm Pivots	4	Every 50 hours
11. Anti-sway Arm Bushings	2	Every 50 hours
12. Lift Arm Elbow Shaft Bushings	4	Every 50 hours
13. Latch Ball Joints	4	Every 50 hours
14. Hydraulic Cylinder Pivot Bushing	4	Every 50 hours
15. Lift Clevis Pivot Bushings	2	Every 50 hours
Traction Unit		
16. Steering Brake Pedal Arms	2	Every 50 hours
17. Engine Water Pump Assy.	1	Every 50 hours
18. Engine to Pump Drive Yoke	3	Every 50 hours
19. Rear Wheel Spindle Bushings	2	Every 50 hours
20. Rear Axle Pivot Bushings	1	Every 50 hours
21. Steering Tie Rod Ball Joint	2	Every 50 hours
22. Service Brake Pivot Bushings	1	Every 50 hours
23. Hydraulic Steering Cylinder Ball Joints	2	Every 50 hours
24. Rear Wheel Bearings	2	Repack every 1000 hours

Refer to Figure 31 for areas to lubricate and the number of fittings involved.

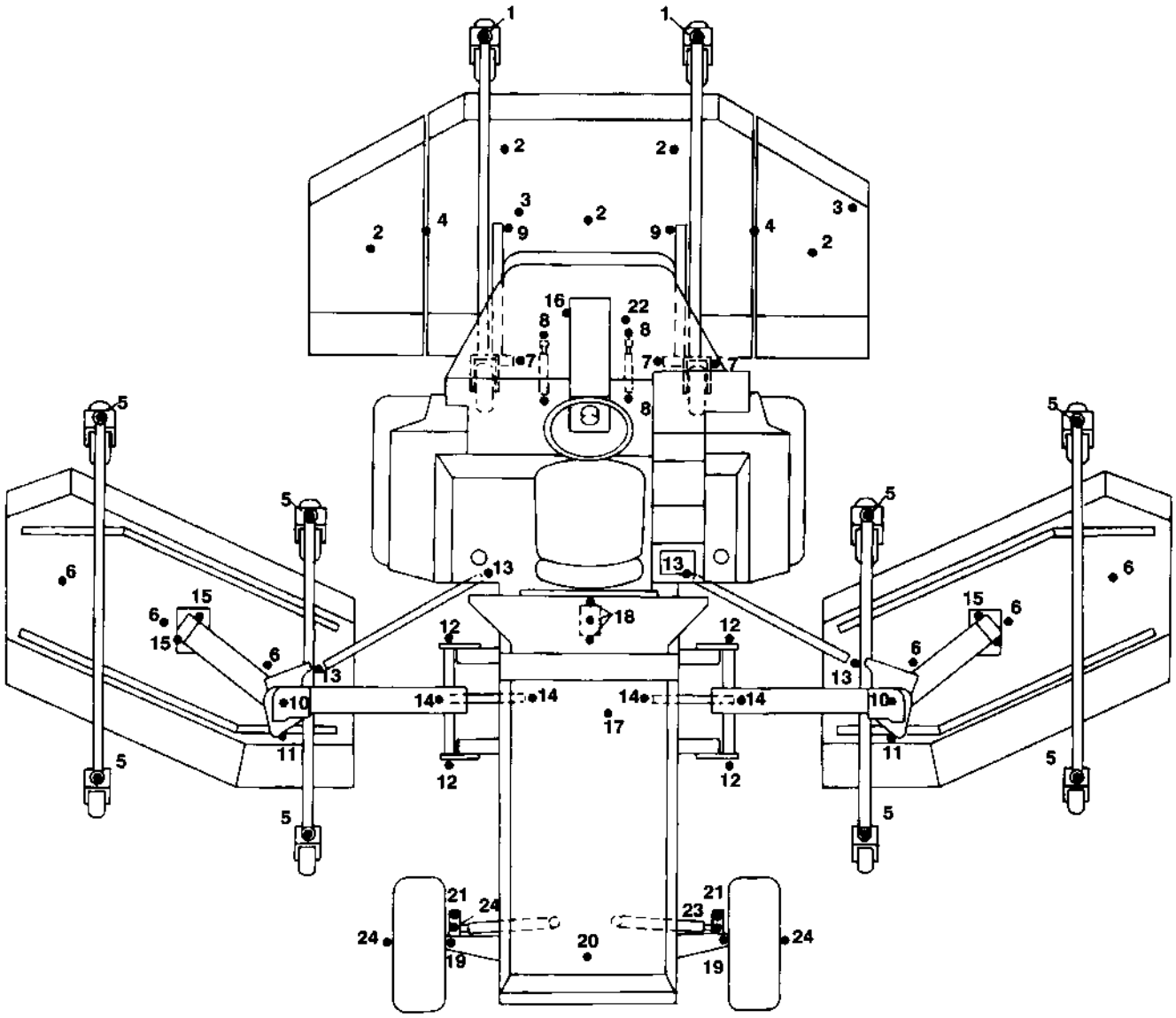

Figure 31

Figure 31

DAILY MAINTENANCE CHECKLIST

Safety Interlock Operation
Brake Operation
Engine Oil Level
Cooling System Fluid Level
Drain Water/Fuel Separator
Air Filter/Pre-Cleaner Condition
Radiator & Screen for Debris
Unusual Engine Noises
Unusual Operating Noises
Height of Cut
Hydraulic System Oil Level
Hydraulic Hoses for Damage
Fluid Leaks
Tire Pressure
Instrument Operation
Condition of Blades
Lubricate All Grease Fittings2
Touch-up Damaged Paint
= Immediately after every washing, regardless of the interval listed.

CAUTION

Before performing machine maintenance, park on a level surface, set the parking brake, fully lower cutting units, shut off the engine and remove the key from the ignition switch. If the engine must be running to perform maintenance or adjustment, stay clear of moving parts. If engine has been operating shortly before maintenance has begun, avoid engine, muffler, turbo-charger and radiator as they may be hot enough to cause injury.

ENGINE OIL AND FILTER

The engine uses any high-quality detergent oil having the American Petroleum Institute—API—"service classification" CD. Oil viscosity recommendations are:

AMBIENT TEMPERATURE	PROPER VISCOSITY
–28.9° to –6.7° C	SAE 10
– 6.7° to 40.6° C	SAE 30
40.6° C and up	SAE 40

Note: Do not use multi-viscosity oils.

Oil Level Check

Check the engine oil level after every five hours of operation.

1. Unlatch and raise the hood and prop it open. Unlatch and remove the left side panel (Fig. 32).

Make sure the hood prop is secured in one of the mounting brackets on the hood.

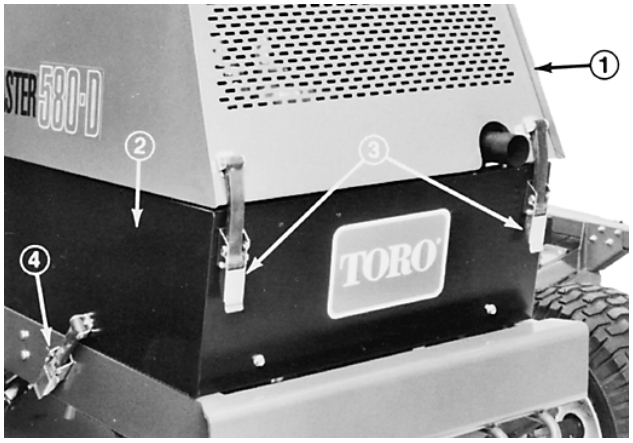

Figure 32

1. Engine hood
2. Left side panel
3. Hood latches
4. Side panel latch

2. Remove the dipstick, wipe it with a clean cloth (Fig. 33) and fully re-insert it in the tube. Remove it from tube and check the oil level. The level should be between the marks on the dipstick. If the level is low, remove the filler cap (Fig. 34). Add oil until the level is to the top mark on the dipstick. DO NOT OVERFILL.

Maintenance Schedule

Maintenance Procedure	Maintenance Interval & Service				
	Every 50 hours	**Every 100 hours**	**Every 200 hours**	**Every 400 hours**	**Every 800 hours**
Lubricate All Grease Fittings Inspect Air Filter, Dust Cup, and Baffle Clean Under Cutting Unit Belt Covers Check Cutting Unit Drive Belt Adjustment	X	X	X	X	X
‡Change Engine Oil and Replace Filter †Check Fan and Alternator Belt Tension Inspect Cooling System Hoses		X	X	X	X
Service Air Filter Replace Fuel/Water Separator Filter †Torque Wheel Lug Nuts				X	X
Check Battery Level/Cable Connections ‡Replace Hydraulic Filter ‡Torque Head and Adjust Valves ‡Check Engine RPM (idle and full throttle)					X
‡Change Planetary Gear Drive Fluid Check Rear Wheel Toe In					X

†Initial break in at 10 hours
‡Initial break in at 50 hours

Change Brake Fluid
Change Fuel Filter
Change Thermostat
Replace Safety Switches
Flush Cooling System and Replace Hoses
Fuel Tank- Drain/Flush
Change Hydraulic Oil

Recommendations
Items are recommended every 1000 hours or 2 years, whichever occurs first.

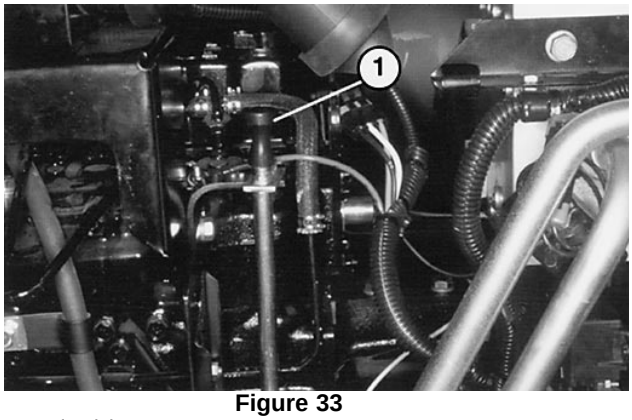

Figure 33

1. Dipstick

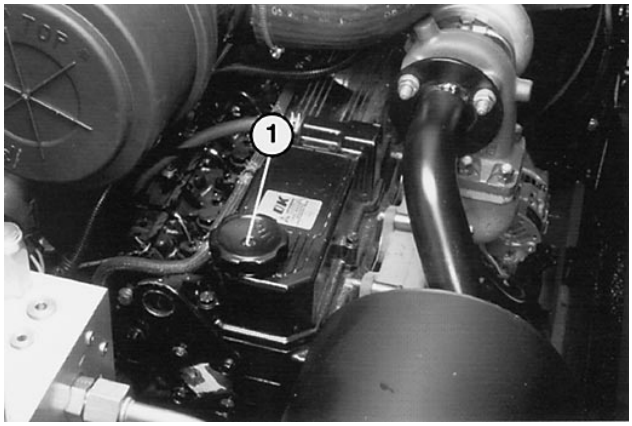

Figure 34

1. Engine oil fill cap

Changing Engine Oil and Filter

The engine holds approximately 10 L of oil. Change the oil and filter after the first 50 hours, then change both after every 100 hours operation. However, change oil more frequently when the engine is operated in dusty or sandy conditions. If possible, run the engine just before changing oil because warm oil flows better and carries more contaminants than cold oil.

1. Unlatch and raise the hood and prop it open (Fig. 32). Make sure the hood prop is secured in one of the mounting brackets on the hood. Unlatch and remove both side panels (Fig. 32).

2. Place the drain pan in line with the drain plug (Fig. 35). Clean the area around the drain plug.

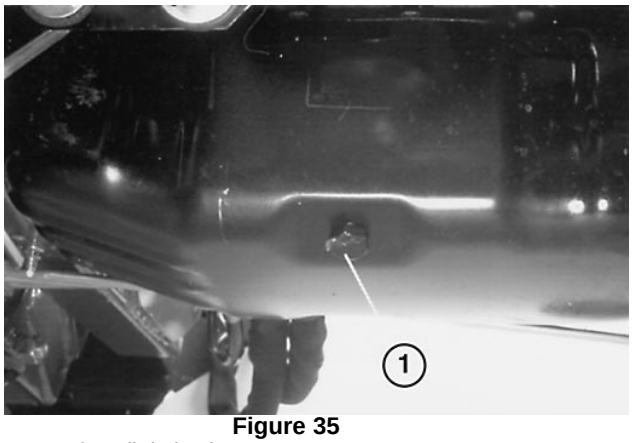

Figure 35

1. Engine oil drain plug

3. Remove the drain plug and allow oil to drain into the pan. Remove and replace the oil filter (Fig. 36); refer to the parts catalog for the replacement number. Apply a coating of oil to the filter O-ring and tighten the filter by hand.

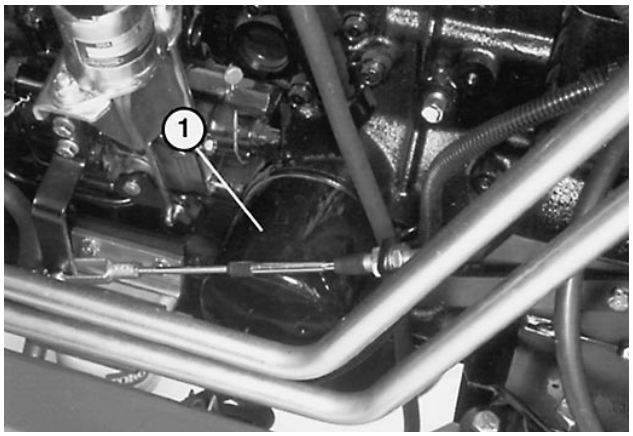

Figure 36

1. Engine oil filter

ENGINE FUEL SYSTEM

1. Locate the fuel filter/water separator on the lower left side of the engine and drain it daily (Fig. 37).

2. After every 200 hours of operation, replace the filter element of the fuel filter/water separator.

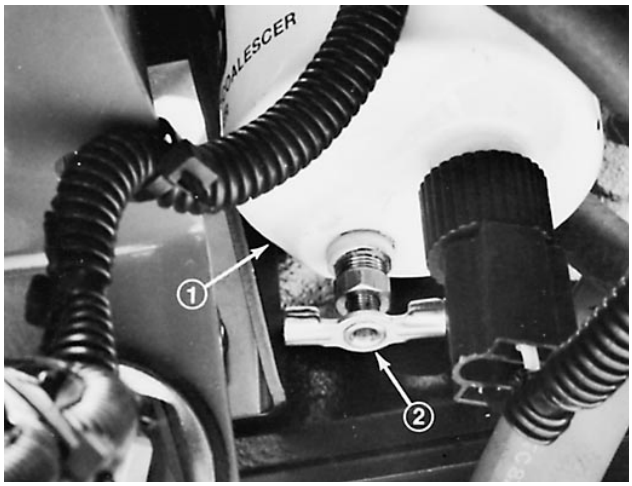

Figure 37
1. Fuel filter/water separator
2. Water drain plug

3. Every 1,000 hours operation, or yearly, replace the engine fuel filter (Fig. 38)—left front side of engine—and drain water from the fuel tank. Apply clean fuel oil to the filter O-ring. Use hands only to install and tighten the filter.

4. If the fuel system becomes contaminated or the machine is to be stored for an extended period, locate the drain at the bottom of the fuel tank and drain and clean the tank. Flush the tank with clean fuel oil.

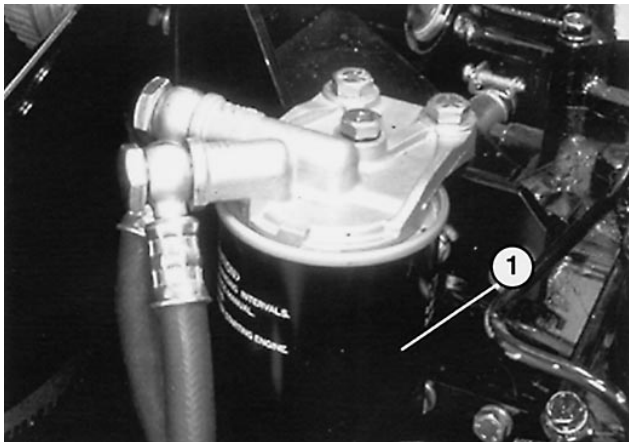

Figure 38
1. Engine fuel filter

IMPORTANT: Following the maintenance steps listed above will, under normal conditions, keep the system trouble-free. However, if the indicator light on the control panel and audible warning signal activate during operation, the engine should be stopped and the fuel system serviced before operation is resumed. This can prevent serious engine damage from occurring.

ENGINE COOLING SYSTEM

The cooling system holds approximately 14.7 L of a 50/50 solution of ethylene glycol anti-freeze and water. To properly maintain the system, use the following procedures:

1. Check coolant level each day before starting the engine; refer to Check Cooling System in Before Operating section.

CAUTION

Check coolant level before the engine has been started because the coolant system will not be pressurized. When the engine is hot and the radiator cap removed, hot pressurized coolant can escape and cause burns. If engine coolant is hot, slowly and carefully remove radiator cap.

2. Each day after operation, clean debris from the radiator grille. Clean more frequently in dusty and dirty conditions.

A. Move the seat forward as far as possible.

B. Remove the upper and lower grille assemblies (Fig. 39).

C. Use compressed air to clean the grilles and remove debris from the grille mounting areas.

D. Install grilles after cleaning, lower and lock the seat in position.

Figure 39

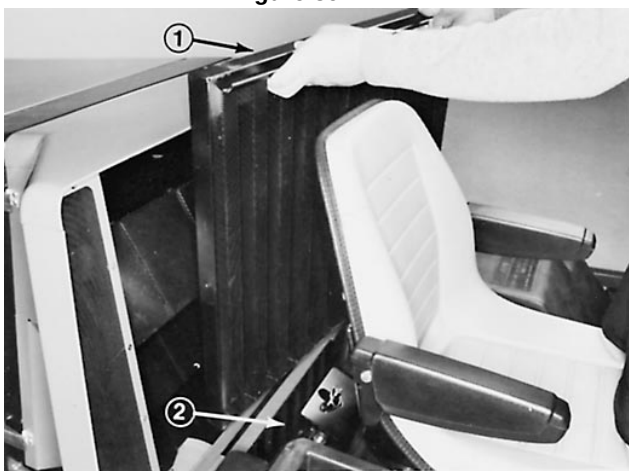

1. Upper grille
2. Lower grille

3. Every 100 hours of operation, clean the radiator and hydraulic cooler fins. Clean more frequently in dusty and dirty conditions.

A. Use procedures instep 2, items a-c.

B. Unlatch the latch handles on both sides and remove the radiator cowl and grille support (Fig. 40).

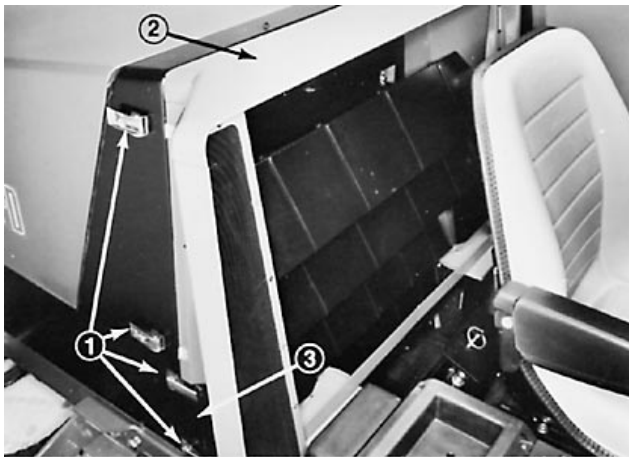

Figure 40

1. Latch handles
2. Radiator cowl
3. Grille support

C. Remove the wing nuts securing the top of the oil cooler to the upper radiator support and pivot the top of the oil cooler away from the radiator (Fig. 41).

D. Unlatch and raise the hood and prop it open. Use compressed air from the engine fan side to clean the radiator and oil cooler fins.

E. Re-assemble components after cleaning is completed.

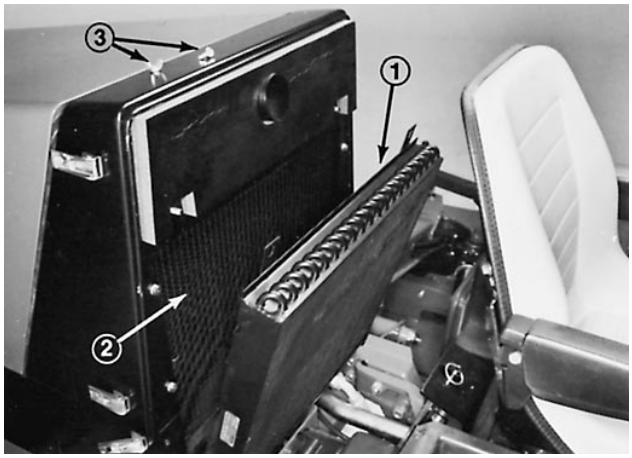

Figure 41

1. Oil Cooler
2. Radiator
3. Wing Nuts

4. Every 100 hours operation, inspect the fan belt for condition and proper tension. Replace the belt if needed. Check and adjust tension as follows:

A. Unlatch and raise the hood and prop it open. Unlatch and remove the right side panel.

B. Proper tension will allow 13mm deflection when a force of 14 Nm is applied on the belt midway between the pulleys. If deflection is incorrect, proceed to step c; If deflection is correct, install the panel and close the hood.

C. Loosen the bolts (3) securing the alternator to the plate and mounting bracket (Fig. 42). Rotate the alternator away from the engine to increase tension and tighten the bolts. Check belt tension after adjustment and re-adjust, if necessary.

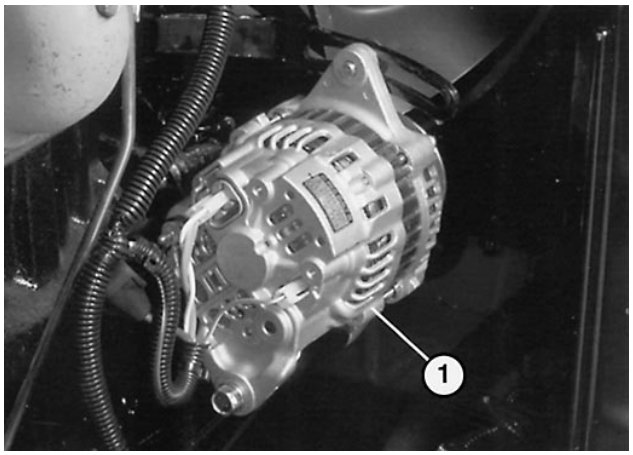

Figure 42

1. Alternator

D. Install the panel and close the hood.

5. Every 100 hours operation, check the condition of the cooling system hoses and the tightness of connections. Repair, as needed.

6. Every 1,000 hours, or yearly, drain and flush the cooling system and replace the thermostat and hose assemblies.

GENERAL AIR CLEANER MAINTENANCE

1. Check the air cleaner body for damage that could possibly cause an air leak. Replace a damaged air cleaner body.

2. Service the air cleaner filter every 200 hours (more frequently in extreme dusty or dirty conditions).

SERVICING THE AIR CLEANER

1. Release the latches securing the air cleaner cover to the air cleaner body. Separate the cover from the body. Clean the inside of the air cleaner cover.

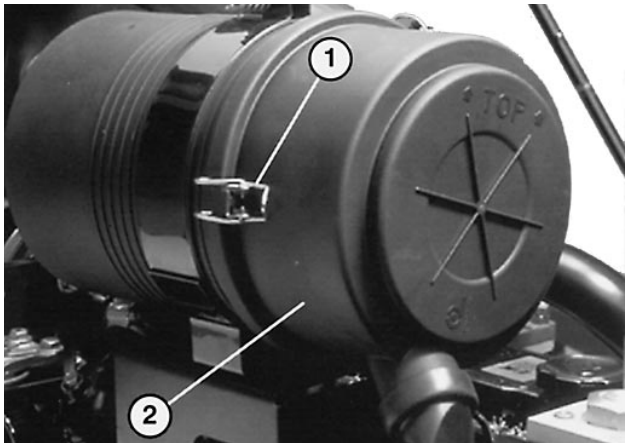

Figure 43
1. Air cleaner latches
2. Cover

2. Gently slide filter out of air cleaner body to reduce the amount of dust dislodged. Avoid knocking filter against air cleaner body.

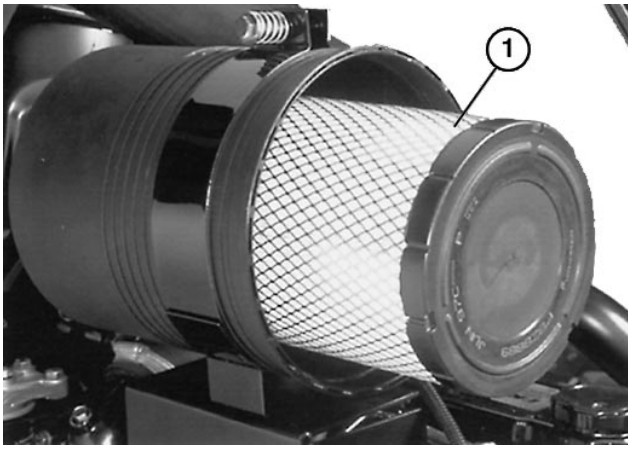

Figure 44
1. Air cleaner filter

3. Inspect the filter and discard it if damaged. Do not wash or reuse a damaged filter.

Washing Method

A. Prepare a solution of filter cleaner and water and soak the filter element about 15 minutes. Refer to directions on the filter cleaner carton for complete information.

B. After soaking the filter for 15 minutes, rinse it with clear water. Maximum water pressure must not exceed 40 psi to prevent damage to the filter element. Rinse the filter from the clean side to the dirty side.

C. Dry the filter element using warm, flowing air, or allow the element to air-dry. Do not use a light bulb to dry the filter element because damage could result.

Compressed Air Method

A. Blow compressed air from the inside to the outside of the dry filter element. Do not exceed 100 psi to prevent damage to the element.

B. Keep the air hose nozzle at least 5 cm from the filter and move the nozzle up and down while rotating the filter element. Inspect for holes and tears by looking through the filter toward a bright light.

5. Inspect the new filter for shipping damage. Check the sealing end of filter. Do not install a damaged filter.

6. Insert the new filter properly into the air cleaner body. Make sure the filter is sealed properly by applying pressure to the outer rim of the filter when installing. Do not press on the flexible center of the filter.

7. Reinstall the cover and secure the latches.

HYDRAULIC SYSTEM SERVICE

Listed below are hydraulic oil brands recommended for the 580-D. All are interchangeable with one another.

Mobil	DTE 15 M
Mobil	DTE 26
Shell	Tellus 68
Amoco	Rykon Oil #68
Conoco	Super Hydraulic Oil 68
Exxon	Nuto H 68
Kendall	Kenoil R & 0 AW 68
Pennzoil	Penreco 68

Phillips	Magnus A 68
Standard	Energol HLP 68
Sun	Sunvis 831 WR
Union	Unax AW 68

IMPORTANT. Use only hydraulic oils specified. Other fluids could cause system damage.

Note: A red dye additive for the hydraulic system oil is available in 20 ml bottles. One bottle is sufficient FOR 115-123 1 of hydraulic oil. Order Part No. 44-2500 from your Authorized Toro Distributor.

Check Oil Level

1. Visually check hydraulic oil level daily through sight glass (Fig. 46). With machine on a level surface, oil should be in the middle of the sight glass when warm and slightly below level when cold.

2. If oil needs to be added, clean area thoroughly around the fill cap before removing cap (Fig. 45). Add oil until proper level is indicated in sight glass.



Figure 45
1. Hydraulic Oil Level Sight Glass
2. Reservoir Fill Cap

Replace Hydraulic Filter (initial)

After 50 hours initial operation, replace the hydraulic filter (Toro Part No. 69-1720).

1. Place drain pan under filter and remove filter (Fig. 46).

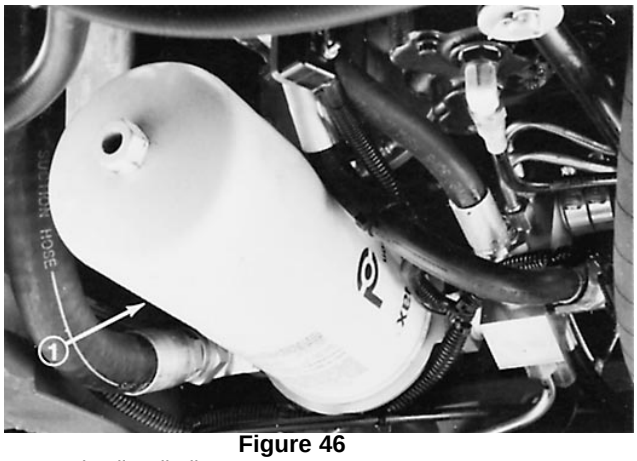

Figure 46
1. Hydraulic Oil Filter

2. Coat the O-ring of the replacement filter with clean hydraulic oil before installing.

3. To tighten the filter, hand turn the filter element onto the filter head until the element is firmly seated against the head.

4. Start the engine and check for leaks. Check the oil level after engine has been stopped. Add oil, if necessary.

Inspect Lines and Fittings

Every 100 hours of operation, inspect all hoses, lines and fittings for signs of leakage or damage (blisters, cut hoses, etc.)

CAUTION: Replace any suspect hoses or lines immediately to prevent machine damage or personal injury.

WARNING

Keep your body and hands away from pin hole leaks or nozzles that eject high-pressure hydraulic fluid. Use cardboard or paper to find hydraulic leaks. Hydraulic fluid escaping under pressure can penetrate your skin and cause injury. Fluid accidentally injected into your skin must be surgically removed within a few hours by a doctor familiar with this form of injury or gangrene may result.

Replace Hydraulic Filter

Every 500 hours of operation, replace the filter element; refer to *Replace Hydraulic Filter.*

Drain Water From Hydraulic Reservoir

Every 500 hours operation, drain water from the reservoir at three (3) locations.

1. Place drain pan under reservoir.

2. Locate plugs at right rear behind front wheel, at rear center and front center of reservoir (Fig. 47).

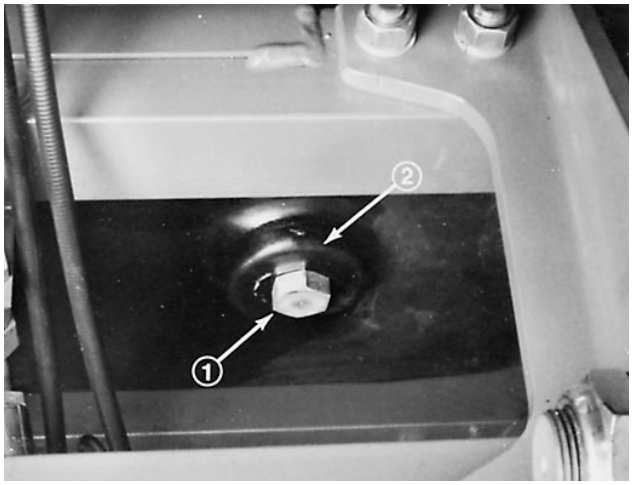

Figure 47
1. Drain plug—front center
2. Hydraulic reservoir

3. Open each plug approximately one turn. Allow fluid to drain until only hydraulic oil is draining and re-tighten the plug.

4. Check the hydraulic oil level. Add oil, as necessary.

Drain Hydraulic Reservoir

Every 1,000 hours operation, or yearly, drain and replace hydraulic fluid in reservoir. Total system capacity is approximately 151 L; reservoir capacity is approximately 121 L.

Note: If oil becomes contaminated (oil appears milky or black), the system must be flushed. Contact your local TORO distributor for assistance.

1. Place the drain pan under the reservoir. In turn, remove all three (3) drain plugs and let the oil drain into pan (Fig. 47).

2. Inspect the O-rings on the plugs and replace, if damaged. Install the drain plugs.

3. With the machine on level surface, fill the reservoir with hydraulic oil until the oil level is midway up in the sight glass (Fig. 45).

4. Install the reservoir cap. Start the engine and use all hydraulic controls to distribute oil throughout the system. Check for leaks. If repairs are needed, shut off the engine before beginning.

5. Recheck oil level; add if necessary.

Hydraulic System Breather

During normal operating conditions, replace the hydraulic system oil breather after every 1000 hours operation, or yearly. Replace the breather more frequently in extremely dusty, dirty conditions.

1. Release the latches, open the hood and prop it open with a rod.

2. The breather is located along the right side of the radiator (Fig. 48). Clean the area around it, unscrew it with a wrench and install the replacement.

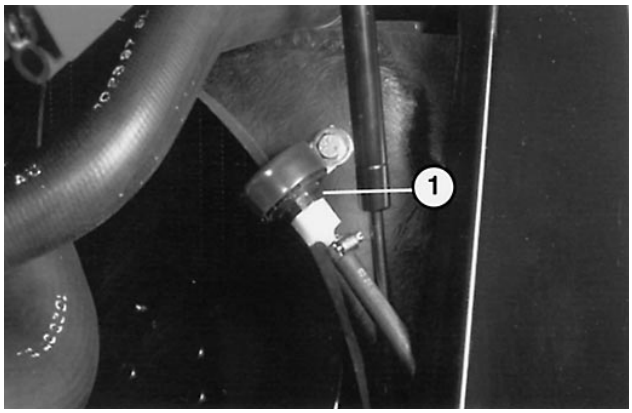

Figure 48
1. Hydraulic system breather

3. Close and latch the hood.

Hydraulic System Test Ports

The test ports (Fig. 49) are used for testing the hydraulic circuits. Contact your local TORO distributor for assistance on use of these components.

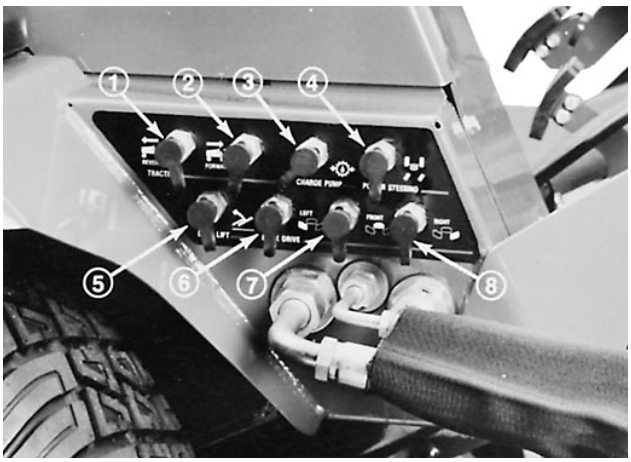

Figure 49

1. Traction—reverse
2. Traction—forward
3. Charge pump
4. Steering circuit
5. Dock lift
6. Left cutting unit
7. Front cutting unit
8. Right cutting unit

PLANETARY GEAR DRIVE SERVICE

Change oil initially after 50 hours operation and every 800 hours, or yearly. Use high-quality SAE 80-90 gear lube as replacement. Check oil if leakage is noted.

To check the oil level:

1. With the machine on level surface, position the wheel so the check/drain plug is at either the three or nine o'clock position (Fig. 50).

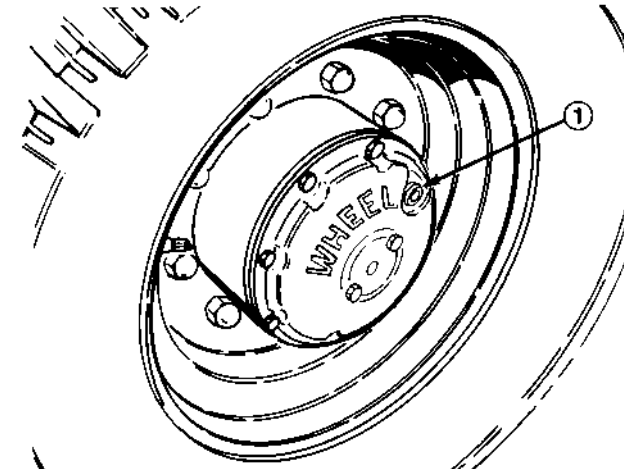

Figure 50

1. Check/drain plug (3 or 9 o'clock position)

2. Remove the plug. Oil should be to the bottom of the hole.

3. Add gear oil, if necessary, to bring oil up to the proper level and install the plug.

4. Repeat steps 1–3 on the opposite gear assembly.

To Drain Gear Oil:

1. With the machine on level surface, position the wheel so the check/drain plug is at the lowest position.

2. Place the drain pan under the hub, remove the plug and allow oil to drain.

3. When the oil has drained, position the wheel so the plug hole is at the three or nine o'clock position (Fig. 50).

4. Add approximately 1.24 L high-quality SAE 80-90 weight gear lube to bring the level up to the bottom of the hole and install the plug.

5. Repeat steps 1–4 on the opposite gear assembly.

BATTERY SERVICE

IMPORTANT: Before welding on the machine or performing service to the electrical system, disconnect the negative (–) battery cable from the batteries to prevent damage to the electrical system.

Check the battery cables and connections every 100 hours and check the batteries with a hydrometer every 500 hours operation. Keep the terminals and the entire battery case clean. Clean the batteries with a solution of baking soda and water, then rinse with clear water. To prevent corrosion, coat the battery posts and cable connectors with Grafo 112X (Skin-over) grease, TORO Part No. 505-47.

CAUTION

Wear safety goggles and rubber gloves when working with the batteries. Charge batteries in a well-ventilated place so the gases produced while charging can dissipate. Since the gases are explosive, keep electrical sparks and open flames away from the batteries. Do not smoke. Nausea may result if the gases are inhaled. Unplug the charger from the electrical outlet before connecting to or disconnecting charger leads from the battery posts.

1. Unlatch, raise and prop the hood open. Unlatch and remove the left engine side panel.

2. Remove the capscrews securing the battery tray to the machine and slide the tray out (Fig. 51).

3. Check both batteries for charge with a hydrometer. If the batteries check acceptably, slide the tray back in place, secure with capscrews and install the side panel. If the batteries require charging, proceed to step 4.

4. Remove the negative (–) battery cable connectors from the batteries (Fig. 51). Connect a 3- to 4-amp battery charger to the posts. Charge the batteries at a rate of 3 to 4 amperes for 4 to 8 hours.

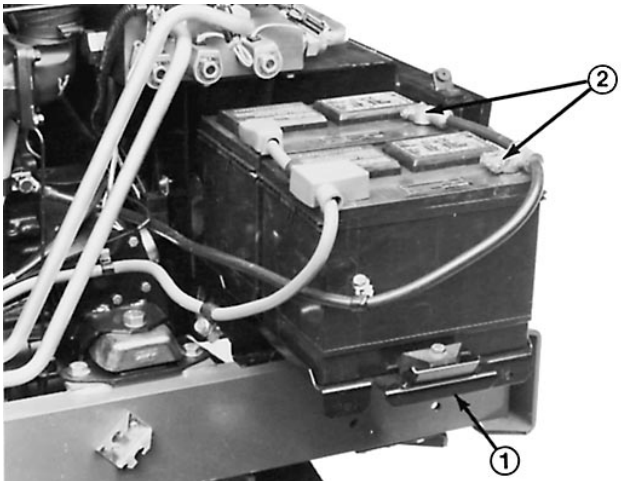

Figure 51

1. Battery tray
2. Negative (–) cable connectors

5. When batteries are fully charged, disconnect charger from electrical outlet and battery posts.

6. Connect the negative (–) cable ends, slide the tray back in place, and secure it with capscrews. Install the side panel, close the hood and secure both with latches.

FUSES & CIRCUIT BREAKER

One 5 amp, two 15-amp fuses and a fusible link are incorporated for the protection of the entire wiring circuit. The link can be replaced if the total loss of electrical function results. They are located under the control panel to the right of the seat (Fig. 52). If total loss of electrical function occurs, find and correct the malfunction before replacing the fusible link.

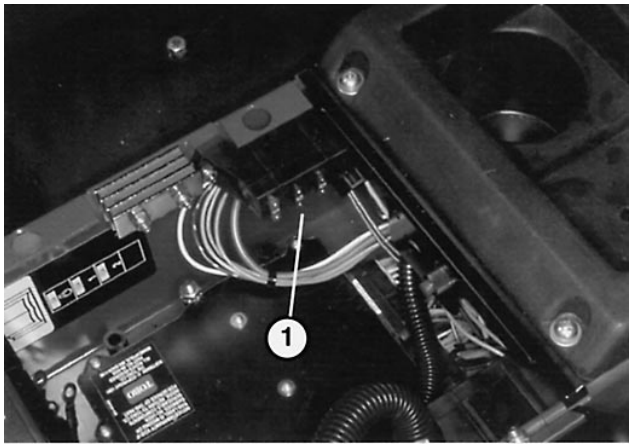

Figure 52

1. Fuse block

IMPORTANT: Do not install the fuses in the fuse block on the left side of the instrument control panel. Fuses should be installed in this fuse block only if the machine is equipped with a road light kit.

BRAKE SYSTEM SERVICE

Check the brake fluid level every 50 hours operation. Replace fluid every 1000 hours operation, or yearly. Replenish the system with DOT 3 hydraulic brake fluid. To check the fluid level:

1. Raise the floor panel in the front of the seat (Fig. 53). Remove the tool tray.

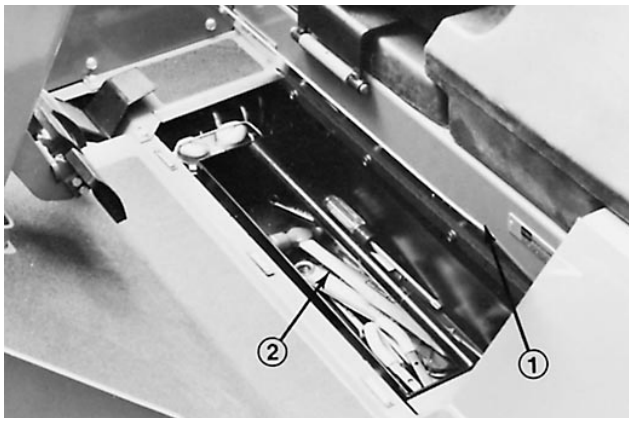

Figure 53

1. Floor plate
2. Tool tray

2. Snap the cover bail off the cover and remove the cover from the master cylinder (Fig. 54).

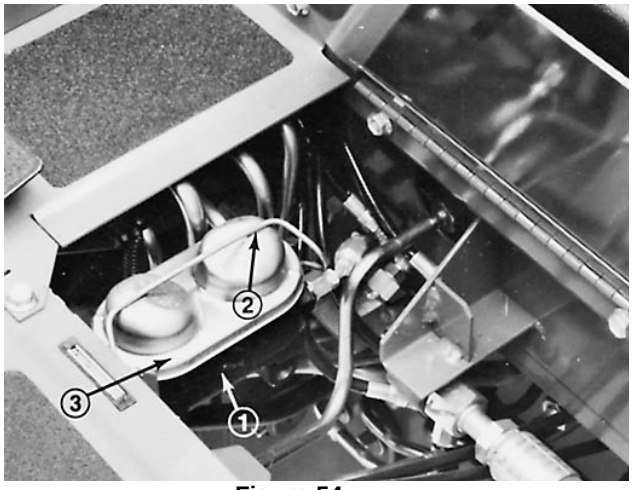

Figure 54

1. Master cylinder
2. Cover bail
3. Reservoir cover

WHEELS AND TIRES

Torque Wheel Nuts

After the first ten (10) hours operation, check the torque on the wheel nuts and every 200 hours thereafter.

1. Torque the lug nuts for the front wheels 81–95 Nm.

2. Torque the lug nuts for the rear wheels to 41–47 Nm.

Check Tire Pressure

Since the Groundsmaster 580-D can be operated under many different types of turf conditions, proper tire pressure is very important. Check tire condition and pressure daily and use the following guide to maintain maximum turf conditions:

Under **normal** mowing conditions and when used on a wide variety of turf grasses—103.4 kPa front; 89.6 kPa rear. 344.7 kPa Casters.

When turf is **wet** and softer than normal—use low tire pressure: 82.7 kPa front and 62 kPa rear.

When turf is **dry** and harder than normal, use high pressure: 124 kPa front and rear.

IMPORTANT: Do not operate in HIGH RANGE for extended periods when tire pressure is less than 138 kPa because tires may be damaged. When tire pressure exceeds 138 kPa, HIGH RANGE may be used.

CUTTING UNIT LUBRICATION

Follow guidelines in the Lubrication Chart to properly maintain the units. To gain access to the center and inner spindle shaft fittings on each outboard unit, proceed as follows:

Note: To grease spindle bearings, apply 2–3 pumps with a hand grease gun for each spindle.

1. Position the machine on a level surface, lower the cutting units to the shop floor, engage the parking brake, shut the engine off and remove the key from the ignition switch.

2. Remove the inner deck pulley cover (Fig. 55).

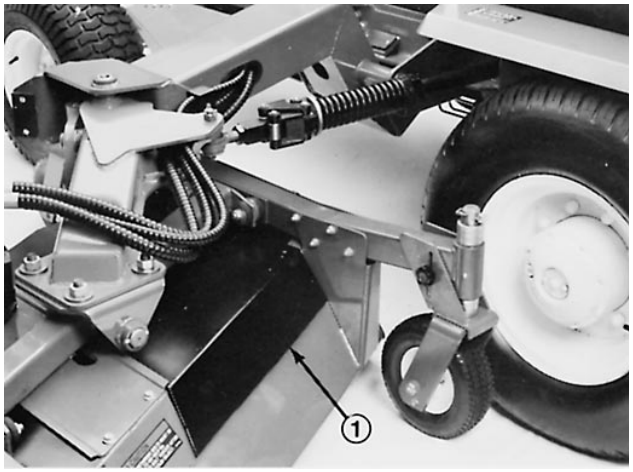

Figure 55

1. Inner cover

3. Use the belt to rotate the inner and center spindle pulleys until the grease fittings can be accessed with a grease gun.

4. Grease the fittings and replace the cover.

BLADE MAINTENANCE

Note: Although not needed for normal maintenance procedures, the front cutting unit can be pivoted (tilted) to a fully upright position (Fig. 56). Should you desire to tilt the cutting unit, proceed as follows:

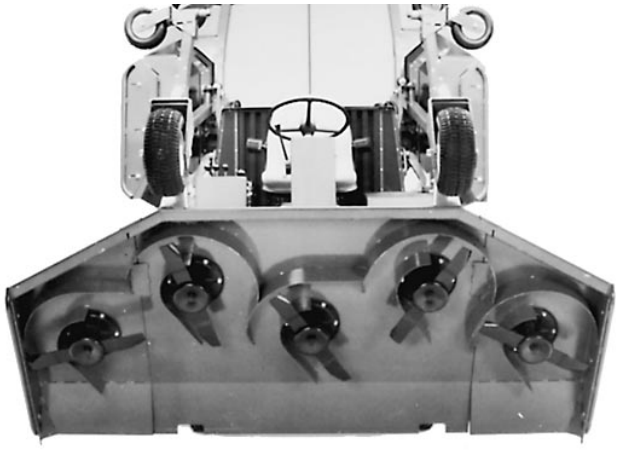

Figure 56

To Pivot (Tilt) the Cutting Unit Upright:

1. Position the front cutting unit so the rear castor wheels just clear the floor, set the parking brake and shut off the engine.

2. Remove the deck tilt link from the tool box under the traction unit floor (Fig. 53) and klik pins from the weldments on the traction unit frame and cutting unit lift arm.

3. Remove the hairpin cotters and clevis pins from the (2) rear castor assemblies (Fig. 57). Set the left-hand clevis pin aside and insert the right-hand clevis pin into the most forward holes in the castor wheel arm on the right side of the unit (Fig. 58). The castor arm and pin should be resting on top of the unit.

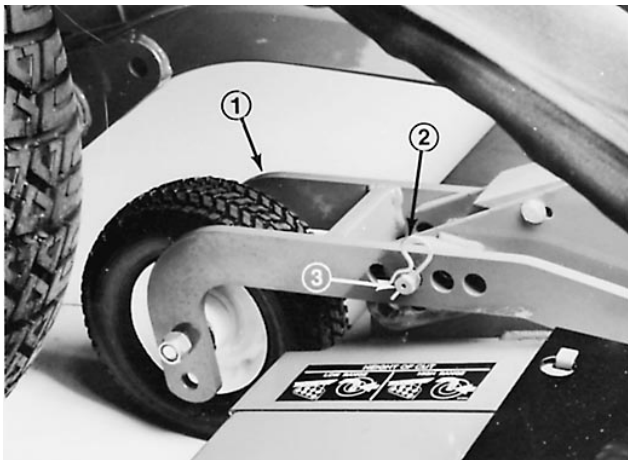

Figure 57
1. Rear Castor wheel assembly
2. Hair pin cotter
3. Clevis pin

4. Sit on the seat, start the engine and raise the cutting unit to the full up position so the spring latch on the left lift arm disengages from the cutting unit. Stop the engine and remove the key from the ignition switch.

5. Fit the deck tilt link over the weldment on the right side of the traction unit and secure with a klik pin. Position a link so it clears when the cutting unit is raised. Keep the remaining klik pin handy to secure the opposite end of the link to the cutting unit arm weldment (Fig. 58).

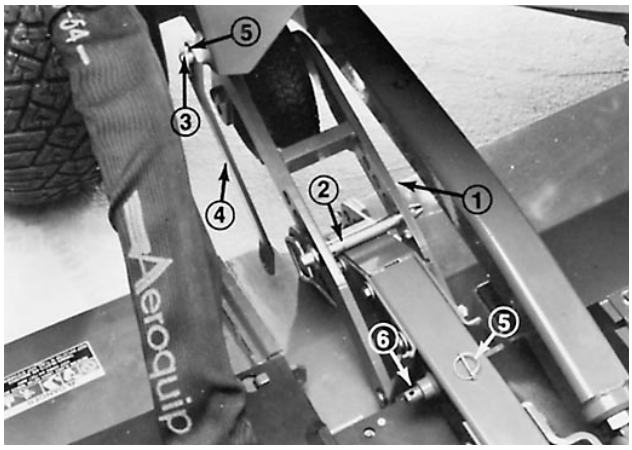

Figure 58
1. Right rear castor wheel assembly
2. Clevis pin
3. Weldment
4. Deck tilt link
5. Klik pin (2)
6. Cutting unit arm weldment

6. Use at least one other person to tilt the cutting unit. Grasp the front of the unit and lift it to an upright position (Fig. 56).

7. Hold the unit upright, fit the link end over the pin on the cutting unit lift arm weldment and secure with a klik pin.

CAUTION

The cutting unit is too heavy for one person to pivot up or down. Use at least one other person to assist in lifting or lowering the unit. Always use proper lifting techniques and hold unit securely when pivoting it up or down.

To Pivot the Cutting Unit down into Operating Position:

1. With the help of an assistant, hold the unit upright, remove the klik pin securing the link end and remove link end from the weldment.

2. Pivot (tilt) the cutting unit downward.

3. Sit on the seat, start the engine and lower the cutting unit so the castor wheels just clear the floor.

4. Remove the height-of-cut pin from the right castor wheel arm. Insert it and the left height-of-cut pin in the proper height-of-cut holes in the castor arms and cutting unit.

BLADE BOLT TORQUE

Check blade bolt torque daily or after blade strikes a solid object. However, if a solid object causes the blade to be damaged or bent to a degree it is unusable, replace it; refer to *Removing The Cutting Unit Blade*, below.

1. Raise the cutting units to the transport position, engage the parking brake, shut off the engine and remove the key from the ignition switch.

2. Using a torque wrench and cloth or thickly padded glove to hold the blade, torque the blade bolts on all cutting units to 190–224 Nm.

REMOVING THE CUTTING UNIT BLADE

Replace the blade if a solid object is hit, the blade is out of balance or bent. Always use genuine TORO replacement blades to ensure safety and optimum performance. Never use blades made by other manufacturers because they could be dangerous.

1. Raise cutting unit to transport position, engage parking brake, shut the engine off and remove key from ignition.

2. Using a rag or thickly padded glove, grasp end of blade. Remove blade bolt, lockwasher, anti-scalp cup and blade from spindle assembly (Fig. 59).

Do not try to straighten a bent blade. Never weld a broken or cracked blade. Always use a new TORO blade to assure continued safety certification of the product.

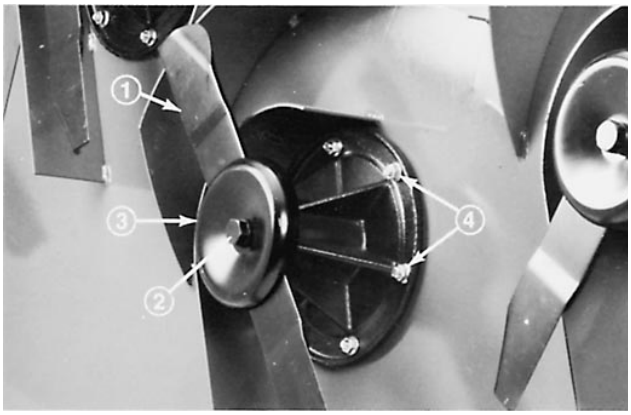

Figure 59

1. Cutting blade
2. Blade bolt and lockwasher
3. Anti -scalp cup
4. Carriage bolt and flange locknut (6)

3. When re-assembling, make sure the blade sail is facing up. Torque the blade bolt to 190–224 Nm.

INSPECTING AND SHARPENING THE BLADE

1. Raise the cutting units to the transport position, engage the parking brake, shut off the engine and remove the key from the ignition switch.

2. Carefully examine the cutting ends of the blade, especially where the flat and sail (curved part) meet (Fig. 60 A). Since sand and abrasive material can wear the metal connecting the flat and sail portions, check the blade before using the machine. If any wear is noticed (Fig. 60 B), replace the blade: refer to *Removing The Cutting Unit Blade* above.

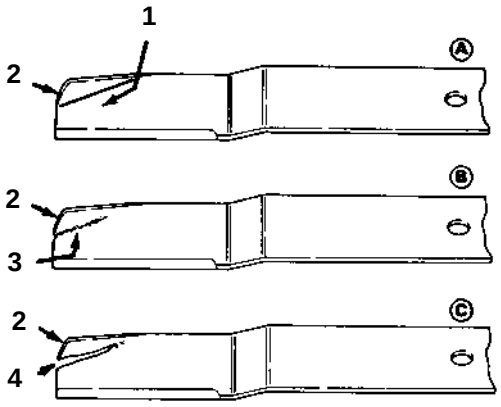

Figure 60

1. Flat part of blade
2. Sail
3. Wear
4. Slot formed

CAUTION

If the blade is allowed to wear, a slot will form between the sail and flat part of the blade (Fig. 60C)). Part of the blade may eventually break off and be thrown from under the housing, possibly resulting in serious injury to yourself or bystanders.

3. Examine the cutting edges of all the blades. Sharpen the cutting edges that are dull or nicked. To assure sharpness, sharpen only the top side of the cutting edge while maintaining the original cutting angle (Fig. 61). If the same amount of metal is removed from both cutting edges, the blade will remain balanced.

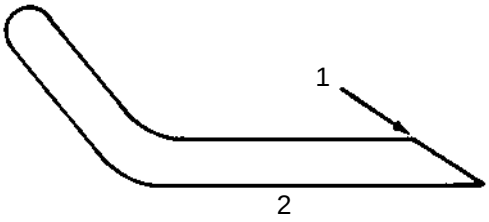

Figure 61
1. Sharpen at original angle
2. End view

4. To check the blade for being straight and parallel, remove from cutting unit. Lay the blade on level surface and check its ends. Blade ends must be slightly lower than the blade center and cutting edge lower than the heel of the blade. If so, it will produce good quality of cut and require minimal engine power to turn. By contrast, a blade with ends higher than the blade center, or with the cutting edge higher than the blade heel, is warped or bent and must be replaced.

5. When re-assembling, make sure the blade sail is facing up. Torque the blade bolt to 140-165 ft.- lb.

INSPECTING AND ADJUSTING CUTTING UNIT BELT TENSION

IMPORTANT: After first ten hours of operation, check new belts for proper tension; thereafter, check tension every 50 hours.

Front Cutting Unit

Note: Belts for wing unit spindles are tensioned by spring loaded idlers and normally do not require tensioning.

1. Position the machine on level surface, lower the cutting unit to the shop floor, engage the parking brake, shut the engine off and remove the key from the ignition switch.

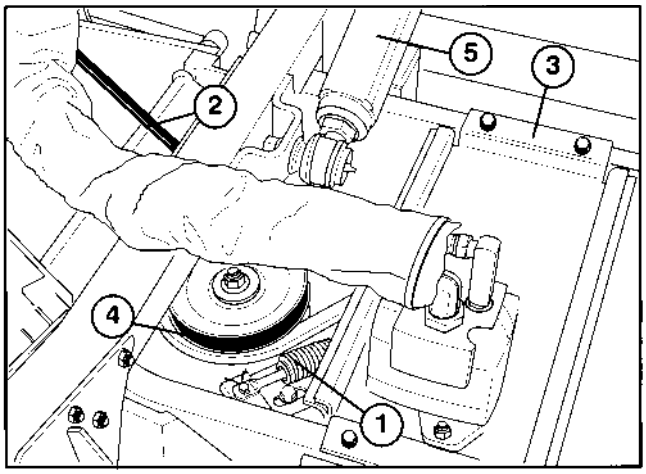

Figure 62
1. Compression spring and tension plate
2. Wing unit drive belt
3. Gear box plate
4. Center drive belt
5. Lift arm

2. Note position of shoulder bolts in slots in tension plate. Optimum belt tension will be maintained when the flanges on the shoulder bolts are 3 mm from the pulley ends of the slots (Fig. 63). If the shoulder bolt flanges are more than 9 mm from the pulley end of the slots, an adjustment should be made.

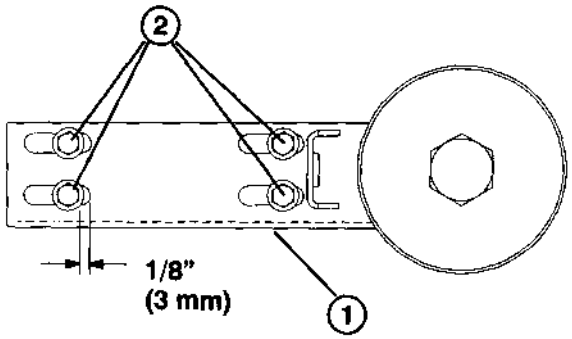

Figure 63
1. Tension plate
2. Shoulder bolts

3. To adjust, loosen the jam nuts (Fig. 64) and extend the tension arm until the shoulder bolt flanges are within 3 mm of the pulley end of the slots (Fig. 63).

Note: When the shoulder bolt flanges are positioned 3 mm from the pulley end of the slots, the length of the

compression spring (Fig. 62) will be approximately 11.3 cm.

4. Tighten jam nuts to secure adjustment. Replace the covers.

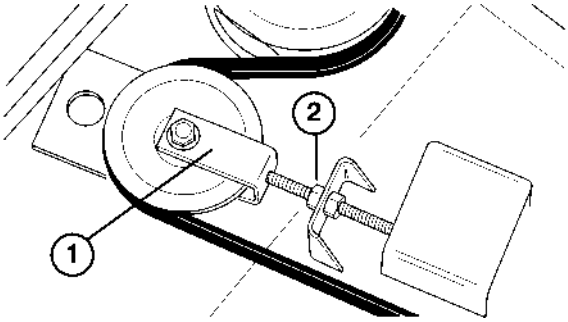

Figure 64

1. Tension arm
2. Jam nuts

Outboard Cutting Units

1. Remove deck covers. To check belt tension, apply 35.5 Nm force at mid-span of the belt and check deflection. There should be approximately 7.9mm deflection. If deflection is incorrect, proceed to step 2. If deflection is correct, proceed to step 3.

2. To tension belts, loosen the flange locknut at the top of the idler pulley (Fig. 65). Slide the pulley against the belt until proper tension is reached. Hold the pulley in position and tighten the locknut.

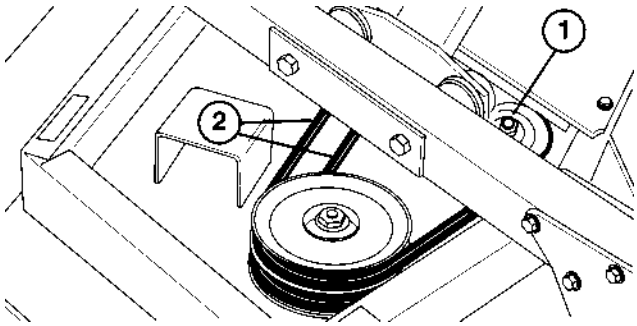

Figure 65

1. Idler pulley flange locknut
2. Drive belts

3. Replace deck covers.

REPLACING BLADE DRIVE BELTS

Position the machine on level surface, lower the cutting unit to the shop floor, engage the parking brake, shut the engine off and remove the key from the ignition switch.

Front Cutting Unit

Note: To remove the center section belt, wing spindle drive belts must first be removed.

1. Remove deck covers. Lift each wing to release the idler pulley tension and slip the belt off the pulleys.

2. Loosen the jam nuts securing the tension plate until the compression spring on the idler assembly is relaxed (Fig. 64).

3. Remove the idler pulley belt retainer.

4. Remove the flange head screws securing the gearbox plate and separate the plate and drive motor assembly from the deck (Fig. 62). Be careful not to bend, twist, kink or damage flexible hydraulic lines.

5. Remove the old belt. Position the new belt in the pulleys and assemble the gear box and plate assembly to the deck.

6. Adjust the belt tension; refer to *Adjusting Cutting Unit Belt Tension.*

7. Install the idler pulley belt retainer.

8. Install the wing drive belts. Lift the wings to allow belts to slip over outer drive spindle pulleys and install covers.

Outboard Cutting Units

Note: To remove the lower belt, the other two belts must first be removed.

1. Position the machine on level surface, lower the cutting unit to the shop floor, engage the parking brake, shut the engine off and remove the key from the ignition switch.

2. Remove the deck covers. Loosen the flange locknuts on the idler pulleys and slide the pulleys away from the belts.

3. Remove the flange head screws securing the gearbox plate to the deck. To separate the plate and drive motor assembly from the deck, rotate the plate end toward the traction unit (Fig. 65). Tip the plate, motor and pulley assembly on its side and remove them from the deck. Be careful not to bend, twist, kink or damage flexible hydraulic lines.

4. Remove belt(s). Position the new belt(s) in pulleys and assemble the gear box and plate assembly to the deck.

5. Adjust belt tension; refer to *Adjusting Cutting Unit Belt Tension.*

SEPARATING CUTTING UNITS FROM TRACTION UNIT

Front Cutting Unit

1. Position the machine on a level surface, lower the cutting unit to the shop floor, engage the parking brake, shut the engine off and remove the key from the ignition switch.

2. Remove the deck covers and relieve belt tension on all belts (Fig. 64).

3. Remove the flange-head screws securing the gearbox plate and separate the plate and drive motor assembly from the deck (Fig. 62). Be careful not to bend, twist, kink or damage flexible hydraulic lines.

4. Remove the hex head screws and flange locknuts securing each lift arm to the castor arm and separate from the arm (Fig. 62).

5. Roll the cutting unit away from the traction unit.

6. To re-install cutting unit, assemble in reverse order.

Outboard Cutting Units

1. Position the machine on la level surface, lower the cutting unit to the shop floor, engage the parking brake, shut the engine off and remove the key from the ignition switch.

2. Remove the deck covers and relieve belt tension on all belts (Fig. 65).

3. Remove the flange head screws securing the gearbox plate to the deck. To separate the plate and drive motor assembly from the deck, rotate the plate end toward the traction unit (Fig. 66). Tip the plate, motor and pulley assembly on its side and remove them from the deck. Be careful not to bend, twist, kink or damage flexible hydraulic lines.

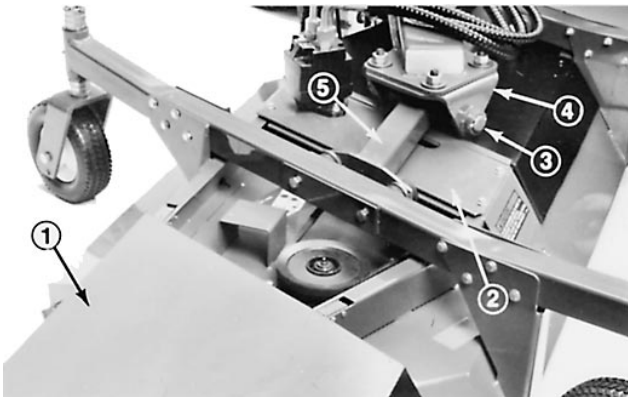

Figure 66

1. Deck cover
2. Gearbox plate
3. Deck pivot Shaft
4. Deck clevis
5. Lift bar

4. Remove the locknut securing the deck pivot shaft into the deck clevis and lift bar (Fig. 66).

5. Move the cutting unit away from the machine.

6. To re-install the cutting unit, assemble in reverse order.

CHECKING AND CORRECTING CUTTING BLADE MISMATCH

If there is mismatch between the blades, the grass will appear streaked when it is cut. This can be corrected by ensuring all blades are straight and cutting on the same plane.

1. Adjust the cutting unit to the highest height of cut. Position the castor wheel axles in lower castor fork holes (Fig. 67, 68). If checking the front cutting unit, reposition the two rear castor's clevis pins to highest height-of-cut setting (Fig. 68). On the front castors, move all castor spacers to the underside of the castor arms (Fig. 68). To check outboard units, move all castor shaft spacers to the underside of the castor arms and castor wheel axles to lower castor fork holes.

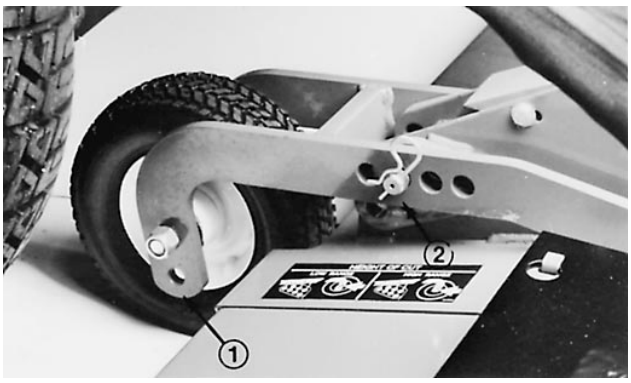

Figure 67

1. High-range height of cut
2. Move to highest height-of-cut setting

2. Place a flat 4 X 8 sheet of plywood at least 20mm thick down on a level surface and lower the cutting unit onto the flat surface.

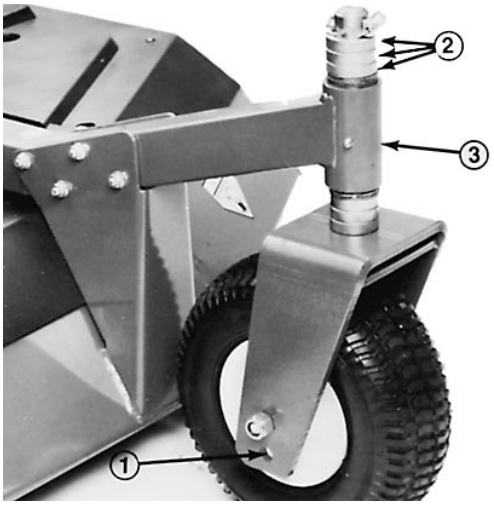

Figure 68

1. High range height of cut
2. Move to the underside of the castor arm
3. Castor arm

3. Rotate the blade so the ends face fore and aft. Measure from a flat surface to front tip of the cutting blade and record the dimension. Rotate the same blade so the opposite end faces forward and repeat the measurement. The difference between the two measurements must not exceed 3 mm. If difference exceeds 3 mm, the blade is bent. Replace it. Use the same procedures to measure all blades.

4. Rotate the blade so the ends face fore and aft. Measure from the flat surface to the front of the cutting blade and record the dimension. Repeat the process with all blades and compare measurements. The maximum difference allowed between any two adjacent blades is 6 mm. The maximum difference allowed between the highest and lowest blade measurement is 10 mm. If measurements do not fit recommended standards, add shims between the cutting deck and spindle housing; proceed to step 6. If the measurements meet standards, proceed to step 5.

5. Rotate the blades so the tips lineup with one another. Tips of adjacent blades must be within 3 mm of each other. If tips are not within 3 mm of one another, add shims between the spindle housing and the bottom of cutter deck; proceed to step 6.

6. Remove the locknuts securing the spindle housing to the deck in the area where shims are to be added. To lower a blade, add a shim (Part No. 3256-24), to each mounting bolt between the spindle housing and cutter deck. Repeat step 5. Continue the process until blade tips are within the required dimensions.

IMPORTANT: Do not exceed three shims at any hole location. If more than one shim is added to any hole location, install decreased amounts of shims in adjacent holes.

ADJUSTING WINGLET STABILIZERS

If the front winglet decks bounce excessively when in transport, an adjustment to the winglet stabilizers is required.

1. Park the machine on a level surface, engage the parking brake, lower the front deck completely to the ground and turn the engine OFF

2. Loosen the capscrews securing the winglet stabilizer brackets to the deck and move the brackets outward.

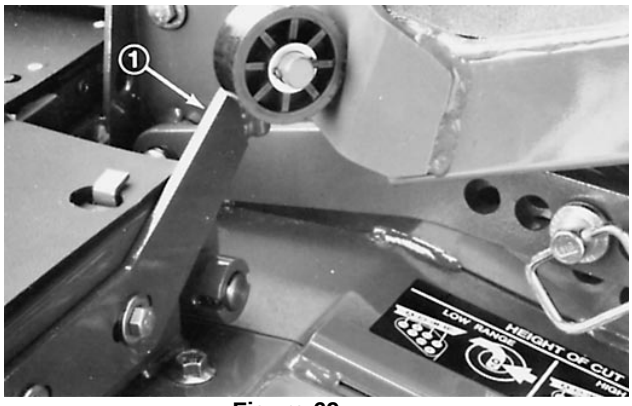

Figure 69

1. Winglet stabilizer brackets

3. Start the engine and raise the front deck completely, then stop the engine.

4. Move the stabilizer brackets inward until the rollers contact the skirt of the machine, then tighten the capscrews locking adjustment.

TRACTION CONTROL NEUTRAL ADJUSTMENT

If the machine moves when the traction pedal and pump lever are in the neutral position, adjustment is required.

1. Park the machine on a level surface, engage the parking brake, raise the wing decks completely, lower the front deck to the ground and turn the engine OFF

2. Actuate the pump lever (with the foot pedal) to make sure that the foot pedal and linkage operate freely. Correct if necessary.

3. Put blocks at the front and rear of all four wheels. Disengage the two (2) planetary wheel drives; refer to Pushing or Towing Machine.

Failure to put the machine on a level surface, block the wheels and disengage the planetary wheel drives before doing neutral adjustment procedure could result in personal injury from machine movement.

4. With the engine OFF, loosen the nut on the carriage bolt and allow the bearing to locate the cam (Fig. 70). Carefully tighten the nut on the carriage bolt.

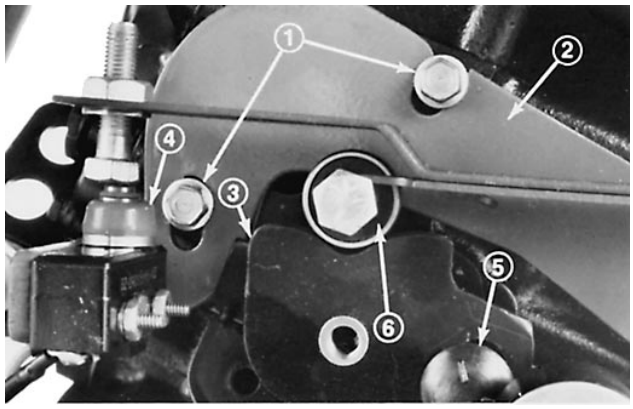

Figure 70

1. Screws
2. Neutral device bracket
3. Cam
4. Neutral switch
5. Carriage bolt
6. Bearing

5. Loosen the screws to allow the neutral device bracket to move; but not freely (Fig. 70). Adjust the neutral device bracket so that 40± in-lb of torque on the control lever just starts to rotate the lever. Tighten the screws.

6. Adjust the neutral switch; refer to Traction (Neutral) Switch Replacement and Adjustment.

7. Adjust the traction control rod; refer to *Traction Control Rod Adjustment*.

8. If movement is still evident when the traction pedal and pump lever are in neutral, contact your local authorized TORO Distributor for assistance.

TRACTION (NEUTRAL) SWITCH ADJUSTMENT

1. Make sure the traction pedal is in the neutral position. Loosen the jam nut on the switch adjusting screw (Fig. 71).

2. Rotate the adjusting screw toward the switch until a circuit through the switch is made.

3. Rotate the adjusting screw an additional 1 turn. Tighten the jam nut.

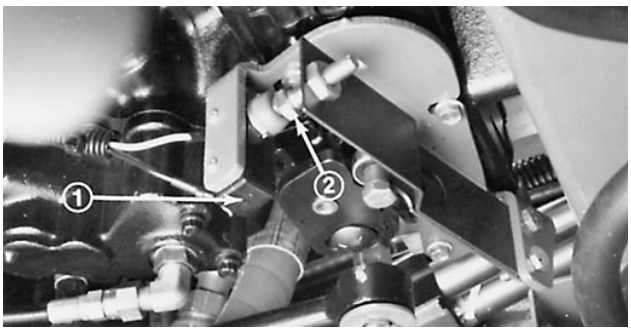

Figure 71
1. Traction (neutral) switch
2. Adjusting screw

4. Actuate the traction pedal in both FORWARD and REVERSE to assure that switch “clicks” in both directions.

TRACTION CONTROL ROD ADJUSTMENT

1. Park the machine on a level surface, engage the parking brake, raise the wing decks completely, lower the front deck to the ground and turn the engine OFF.

2. Remove the cotter pin and slotted nut from the ball joint at the traction pedal (Fig. 72). Disconnect the ball joint from the traction pedal.

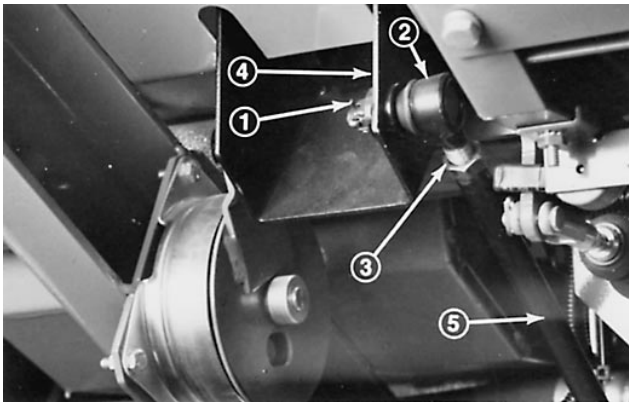

Figure 72
1. Cotter pin and slotted nut
2. Ball joint
3. Jam nut
4. Traction pedal
5. Control rod

3. Loosen the jam nut and adjust the ball joint so that when the control rod is all the way back, the front of the traction pedal hits the floor. Tighten the jam nut.

4. Connect ball joint to traction pedal. Tighten slotted nut until ball joint it tight against traction pedal then loosen nut until next slot aligns with hole in ball joint and install cotter pin.

CYLINDER HEAD BOLTS

Re-torque initially after 50 operating hours and check every 1000 operating hours or annually thereafter.

ENGINE VALVE CLEARANCE

Adjust initially at 50 operating hours and check every 500 operating hours or annually thereafter.

PRODUCT IDENTIFICATION

MODEL AND SERIAL NUMBERS

A plate containing two identification numbers, a model and serial number, is affixed to the traction unit on the left bulkhead below the operator’s seat and on the rear channel of each cutting unit. In correspondence regarding the machine, supply the model and serial number to assure correct information and replacement parts are obtained.

To order parts from an authorized TORO Distributor, please provide:

1. Model and serial numbers of the component in question.

2. Part number, description and quantity of parts desired.

Note: Do not order by reference number. If a parts catalog is being used, use the part number.


TORO®