FORM NO. 3326–454

TORO®

MODEL NO. 30230 – 210000001 & UP

OPERATOR'S MANUAL

GROUNDSMASTER® 225
TRACTION UNIT

TORO®
THIS UNIT CONFORMS TO ANSI/OPEI B71.4–1999

The GROUNDSMASTER 225 conforms to the American National Standards Institute's safety standards for riding mowers when weights are installed according to chart on page 11; thus, TORO proudly displays the ANSI safety seal.

To assure maximum safety, optimum performance, and to gain knowledge of the product, it is essential that you or any other operator of the mower read and understand the contents of this manual before the engine is ever started. Pay particular attention to the SAFETY INSTRUCTIONS highlighted by this symbol —

The safety alert symbol means CAUTION, WARNING or DANGER – personal safety instruction. Failure to comply with the instruction may result in personal injury.

© The TORO COMPANY – 2001

FOREWORD

The GROUNDSMASTER 225 was developed to satisfy the demand for a maneuverable, intermediate size, turf maintenance rotary mower. The machine has advanced concepts in engineering, design and safety; and if maintained properly, it will give excellent service.

Since the GROUNDSMASTER 225 is a high quality product, Toro is concerned about the future use of the machine and the safety of the user. Read this manual to familiarize yourself with the proper set up, operation, and maintenance instructions. The major sections of this manual are:

1. **Safety Instructions**
2. **Set Up Instructions**
3. **Before Operating**
4. **Operating Instructions**
5. **Maintenance**

Certain information in this manual is emphasized. DANGER, WARNING and CAUTION identify personal safety related information. IMPORTANT identifies mechanical information demanding special attention. Be sure to read the directive because it deals with the possibility of damaging a part or parts of the machine. NOTE identifies general information worthy of special attention.

If help concerning set up, operation, maintenance or safety is ever needed, contact a local Authorized Toro Distributor. In addition to genuine Toro replacement parts, the distributor also has optional equipment form the complete line of Toro turf care equipment. Keep your Toro all Toro — buy genuine Toro replacement parts and accessories.

WARNING:

The engine exhaust from this product contains chemicals known to the State of California to cause cancer, birth defects, or other reproductive harm.

SPARK ARRESTER

Because in some areas there are local, state or federal regulations requiring that a spark arrestor muffler be used on the engine of this mower, a spark arrestor screen is available as an option. If a spark arrestor muffler is required, order the following part from you Authorized Toro Distributor.

(1) 75−6880 Spark Arrestor Screen

This part is certified to meet the requirements of USDA Forest Service Standard No. 5100−1A.

When the mower is used or operated on any California forest, brush or grass covered land, a properly operating spark arrester must be attached to the muffler. The operator is violating state law, Section 442 Public Resources Code if a spark arrester is not used.

Whenever you have questions or need service, contact your local authorized Toro Distributor. In addition to having a complete line of accessories and professional turf care service technicians, the distributor has a complete line of genuine TORO replacement parts to keep your machine operating properly. Keep your TORO all TORO. Buy genuine TORO parts and accessories.

TABLE OF CONTENTS

SAFETY INSTRUCTIONS 4
SAFETY AND INSTRUCTION DECALS 6
SPECIFICATIONS 7
LOOSE PARTS CHART 8
SET–UP INSTRUCTIONS 8
BEFORE OPERATING 12
Check Engine Oil 12
Check Cooling System 12
Check Hydraulic System Fluid 13
Fill Fuel Tank 13
CONTROLS 15
OPERATING INSTRUCTIONS 17
Starting and Stopping 17
Checking Interlock System 17
Operating Characteristics 17
Pushing Or Towing Traction Unit 18
LUBRICATION 19
Greasing Bearings And Bushings 19
SERVICE INTERVAL CHART 20
DAILY MAINTENANCE CHECK LIST 21
MAINTENANCE 22
General Air Cleaner Maintenance 22
Servicing Dust Cup and Baffle 22
Servicing Air Cleaner Filter 22
Inspecting Filter Element 23
Cleaning Radiator And Screen 23
Changing Engine Oil And Filter 23
Servicing Fuel System 23
Servicing Belts 24
PTO Clutch Adjustment 25
Changing Coolant In Cooling System 25
Adjusting Transmission For Neutral 25
Changing Transmission Filter 26
Adjusting Service Brakes 26
Servicing Battery 27
Wiring Harness Service 27
Fuses 27
ELECTRICAL SCHEMATIC 28
HYDRAULIC SCHEMATIC 29
PREPARATION FOR SEASONAL STORAGE . . . 30
PRODUCT IDENTIFICATION 30
MAINTENANCE SCHEDULE 31
WARRANTY . . . . . Back Cover

SAFETY INSTRUCTIONS

The GROUNDSMASTER 225 was tested and certified by TORO for compliance with the B71.4-1999 specifications of the American National Standards Institute. Although hazard control and accident prevention partially are dependent upon the design and configuration of the machine, these factors are also dependent upon the awareness, concern, and proper training of the personnel involved in the operation, transport, maintenance, and storage of the machine. Improper use or maintenance of the machine can result in injury or death. To reduce the potential for injury or death, comply with the following safety instructions.

BEFORE OPERATING

1. Read and understand the contents of this manual before starting and operating the machine. Become familiar with the controls and know how to stop the machine and engine quickly. A free replacement manual is available by sending the complete model and serial number to:

The Toro Company

8111 Lyndale Avenue South

Minneapolis, Minnesota 55420−1196.

2. Never allow children to operate the machine. Do not allow adults to operate machine without proper instruction. Only trained operators who have read this manual should operate this machine.

3. Never operate the machine when under the influence of drugs or alcohol.

4. Remove all debris or other objects that might be picked up and thrown by the blades or fast moving components from other attached implements. Keep all bystanders away from operating area.

5. Keep all shields, safety devices and decals in place. If a shield, safety device or decal is defective, illegible or damaged, repair or replace it before operating the machine. Also tighten any loose nuts, bolts or screws to ensure machine is in safe operating condition.

6. Always wear substantial shoes. Do not operate machine while wearing sandals, tennis shoes, sneakers or when barefoot. Do not wear loose fitting clothing that could get caught in moving parts and possibly cause personal injury. Wearing safety glasses, safety shoes, long pants and a helmet is advisable and required by some local ordinances and insurance regulations.

7. Check interlock switches daily for proper operation (Refer To Checking Interlock Switches, Page 17). Do not rely entirely on safety switches -shut off engine before getting off seat. If a switch fails, replace it before operating the machine. The interlock system is for your protection, so do not bypass it. Replace all interlock switches every two years. Interlock switches should be adjusted so:

A. Engine cannot be started unless traction pedal is released (neutral position)—and PTO lever is DISENGAGED (off position).

B. Engine stops if operator gets off seat when traction pedal is depressed.

C. Engine stops if operator gets off seat when PTO lever is ENGAGED (on position).

D. Engine stops if traction pedal is depressed when parking brake is engaged.

8. Grass deflectors must be installed in lowest position on side discharge units.

9. Since gasoline is highly flammable, handle it carefully:

A. Use an approved fuel container.

B. Do not remove fuel tank cap while engine is hot or running.

C. Do not smoke while handling fuel.

D. Fill fuel tank outdoors and only to within an inch from the top of the tank, not the filler neck. Do not overfill.

E. Wipe up any spilled fuel.

WHILE OPERATING

10. Sit on the seat when starting and operating the machine.

11. Before starting the engine:

A. Engage the parking brake.

B. Make sure traction pedal is in NEUTRAL and PTO switch in OFF position.

C. After engine is started, release parking brake and keep foot off traction pedal. Machine must not move. If movement is evident, the neutral return mechanism is adjusted incorrectly; therefore, shut engine off and adjust until machine does not move when traction pedal is released.

12. Seating capacity is one person. Therefore, never carry passengers.

13. Do not run engine in a confined area without adequate ventilation. Exhaust fumes are hazardous and could possibly be deadly.

14. Traverse slopes carefully. Do not start or stop suddenly when traveling uphill or downhill.

15. Operator must be skilled and trained in how to drive on hillsides. Failure to use caution on slopes or hills may cause loss of control and vehicle to tip or roll possibly resulting in personal injury or death.

SAFETY INSTRUCTIONS

16. This product may exceed noise levels of 85 dB(A) at the operator position. Ear protectors are recommended for prolonged exposure to reduce the potential of permanent hearing damage.

17. Using the machine demands attention and to prevent loss of control:

A. Operate only in daylight or when there is good artificial light.

B. Drive slowly. Avoid sudden stops and starts.

C. Watch for holes or other hidden hazards.

D. Look behind machine before backing up.

E. Do not drive close to a sand trap, ditch, creek or other hazard.

F. Reduce speed when making sharp turns and turning on a hillside.

G. The cutting deck must be lowered when going down slopes for steering control.

18. If engine stalls or loses headway and cannot make it to the top of a slope, do not turn machine around. Always back slowly straight down the slope.

19. Never raise the cutting unit or other attached implement while the blades or other parts are rotating.

20. The grass deflector must always be installed and in the lowest position on the cutting unit. This product is designed to drive objects into the ground where they lose energy quickly in grassy areas. **DON'T TAKE AN INJURY RISK!** When a person or pet appears unexpectedly in or near the mowing area, **STOP MOWING**. Careless operation, combined with terrain angles, ricochets, or improperly positioned guards can lead to thrown object injuries. Do not resume mowing until area is cleared.

21. Do not touch engine, muffler or exhaust pipe while engine is running or soon after it is stopped. These areas could be hot enough to cause burns.

22. If cutting deck strikes a solid object or vibrates abnormally, stop immediately, turn engine off, set parking brake and wait for all motion to stop. Inspect for damage. If damaged, repair or replace any components before operating.

23. Before getting off the seat:

A. Move traction pedal to neutral position and remove foot from pedal.

B. Set the parking brake and turn the PTO switch OFF.

C. Shut the engine OFF and remove key from ignition switch. Wait for all machine movement to stop before getting off the seat.

MAINTENANCE

24. Before servicing or making adjustments, stop engine and remove key from the switch.

25. Make sure machine is in safe operating condition by keeping all nuts, bolts and screws tight.

26. Make sure all hydraulic line connectors are tight, and all hydraulic hoses and lines are in good condition before applying pressure to the system.

27. Keep body and hands away from pin hole leaks or nozzles that eject high pressure hydraulic fluid. Use cardboard or paper to find hydraulic leaks. Hydraulic fluid escaping under pressure can penetrate skin and cause injury. Fluid accidentally injected into the skin must be surgically removed within a few hours by a doctor familiar with this form of injury or gangrene may result.

28. Before disconnecting or performing any work on the hydraulic system, all pressure in system must be relieved by stopping engine and lowering implement to the ground.

29. If major repairs are ever needed or assistance is desired, contact an Authorized Toro Distributor.

30. To reduce potential fire hazard, keep engine area free of excessive grease, grass, leaves and dirt.

31. If engine must be running to perform maintenance or an adjustment, keep hands, feet, clothing and other parts of the body away from cutting deck and other moving parts. Keep all bystanders away.

32. Do not overspeed the engine by changing governor setting. To assure safety and accuracy, have an Authorized Toro Distributor check maximum engine speed.

33. Shut engine off before checking or adding oil to the crankcase.

34. At the time of manufacture, the machine conformed to the safety standards for riding mowers when weights are installed according to chart on page 11. To assure optimum performance and continued safety certification of the machine, use genuine Toro replacement parts and accessories. Replacement parts and accessories made by other manufacturers may result in non-conformance with the safety standards, and the warranty may be voided.

SAFETY AND INSTRUCTION DECALS

The following safety and instruction decals are affixed to the traction unit. If any decal becomes illegible or damaged, install a new decal. Part numbers are listed below and in your Parts Catalog.

CAUTION
MAINTAIN WHEEL FASTENER TORQUE AT 45-55 ft.-lb.
SEE OPERATORS MANUAL FOR INSTRUCTIONS. 67-1720

ON FRAME IN
FRONT OF DRIVE WHEELS
(Part No. 67—1720)

WARNING
TO REDUCE THE POSSIBILITY OF ACCIDENTS, INJURY OR DEATH:
CHECK PERFORMANCE OF ALL INTERLOCK SWITCHES DAILY.
SEE OPERATOR'S MANUAL FOR INSTRUCTONS. DO NOT DEFEAT
INTERLOCK SYSTEM. IT IS FOR YOUR PROTECTION. 67-1710

SEAT FRONT PLATE
(Part No. 67—1710)

WARNING
PTO universal shaft is attached to traction unit. DO NOT ENGAGE PTO without first removing universal shaft or coupling it to a suitable implement.

TAG ON PTO SWITCH
(Part No. 52—1420)

OIL
10W30
or
10W40

FRONT BULKHEAD
(Part No. 53—4430)

TRACTION PEDAL
FORWARD
REVERSE
NO STEP
USE OTHER SIDE
CAUTION
TURN OFF PTO BEFORE RAISING IMPLEMENT TO TRANSPORT POSITION.
DO NOT OPERATE IMPLEMENT IN TRANSPORT POSITION.
92-5772

RIGHT SIDE OF PLATFORM
(Part No. 92—5772)

FLOAT
LOWER
RAISE
LIFT CONTROL
THROTTLE
66-8750

RIGHT OF SEAT
(Part No. 66—8750)

STARTING INSTRUCTIONS (READ OPERATOR'S MANUAL)
1. DISENGAGE POWER TAKE-OFF.
2. PLACE TRACTION DRIVE IN NEUTRAL POSITION.
3. DEPRESS BRAKE PEDAL.
4. SET THROTTLE CONTROL - SLOW POSITION.
5. PULL "CHOKE" - COLD START ONLY.
6. TURN KEY TO START POSITION.
7. PUSH "CHOKE OFF" AFTER ENGINE IS WARM.
TO STOP, TURN KEY TO OFF POSITION AND REMOVE KEY.

WARNING
LOS OPERADORES DEBEN ESTAR MUY BIEN CAPACITADOS EN UNA OPERACION SEGURA.
TO MINIMIZE THE RISK OF ACCIDENTS, INJURY OR DEATH:
- BEFORE LEAVING OPERATOR'S POSITION:
  - MOVE TRANSMISSION TO NEUTRAL
  - SET PARKING BRAKE
  - DISENGAGE POWER TAKE-OFF
  - SHUT OFF ENGINE
  - REMOVE IGNITION KEY
- KEEP ALL GUARDS AND COVERS IN PLACE.
- WAIT FOR ALL MOVEMENT TO STOP BEFORE SERVICING.
- STOP ENGINE BEFORE LEAVING SEAT, ADDING FUEL OR LIFTING HOOD.
- KEEP PEOPLE AND PETS A SAFE DISTANCE AWAY.
- GO SLOW AND AVOID SHARP TURNS ON SLOPES TO AVOID ROLLOVER.
- DECK MUST BE LOWERED WHEN GOING DOWN SLOPES FOR STEERING CONTROL.
92-8798

ON TOOL BOX
(Part No. 92—8798)

GAS ONLY
71-3730

NEAR FUEL CAP
(Part No. 71—3730)

WARNING
72-3300

ON FAN SHROUD
(Part No. 76—8750)

1 INCH (25 mm)
CAUTION
FILL FUEL TANK TO ONE INCH BELOW FILLER NECK.
DO NOT OVERFILL. 27-7310

TOOL BOX REAR
(Part No. 27—7310)

CHECK/SERVICE
1. Oil Levels (Engine/Trans.)
2. Coolant level
3. Tire pressure
4. Belts (Fan, PTO)
5. Fuel – Gas Only
6. Battery
7. Grease, Lube points
8. Radiator screen
9. Air Cleaner
10. Electric clutch gap .015-.030
11. PTO Belt tension

FILTERS	PART NO.
A. Air	27-7110
B. Engine Oil**	491056
C. Fuel Line	95–2926
D. Trans. Oil	23-2300

GM 225 QUICK REFERENCE AID

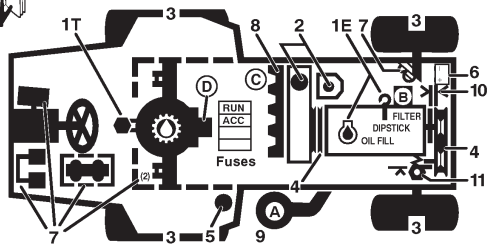

FLUID SPECIFICATIONS *See operator's manual for initial changes.

	TYPE >32°F	TYPE <32°F	CAPACITY	*CHANGE INTERVALS	
Engine oil	SAE 30 SE-SF	SAE 5W-30/SE-SF	3.2 QT. WITH FILTER	200 hrs.	filter 200 hrs.
Trans oil	SAE 10W-30 SF,CC,CD	TYPE F or FA Trans. Fluid	6 QT.	*	filter 200 hrs.
Fuel	UNLEADED GASOLINE		8.5 GAL.	—	filter 400 hrs.
Coolant	50/50 MIX Ethylene glycol anti-freeze/Water		4.5 QT.	2 years	

**OBTAIN REPLACEMENT PART FROM LOCAL BRIGGS & STRATTON DEALER. 95-3008

INSIDE TOOL BOX COVER
(Part No. 95—3008)

SPECIFICATIONS

Engine:

Manufacturer — Daihatsu
Horsepower — 24.9 @ 2900 RPM.
Torque — 35.5 ft–lb @ 2300 RPM.
Displacement — 58.1 cu in. (952 cc).
Crankcase Capacity — 3.2 qt. (3.0 L).
Governor — Mechanical.
Governor Limit — 3100-3250 RPM.
Idle Speed — 1500 RPM.

Air Cleaner: Donaldson heavy duty with precleaner. Remote mounted.

Fuel Tank Capacity: 8.5 gal. (32 l).

Fuel Filter: Inline type. Replaceable (Toro Part No. 95–2926).

Fuel Pump: 12 volt electric (transistor type) .

Cooling System:

Radiator — Approx. 4 qt capacity.

Expansion Tank — Remote mounted; 1/2 qt. capacity. System contains a 50/50 mix of ethylene glycol anti-freeze and water.

Electrical: Battery — 12 volt, BCI group size 26,530 Amp at 0° F. 35 amp alternator with regulator/rectifier.

Drive Coupling: Transmission driven by steel shaft with flexible rubber couplings at each end.

Transmission;

Manufacturer & Type — Sundstrand hydrostatic, Type U15.

Normal Charge Pressure — 70-150 psi (483-1034 kPa).

Implement Relief Setting — 700-800 psi (4 826 - 5 516 kPa).

Hydraulic Filter: 25 micron mounted directly to transmission. Replaceable (Toro Part No. 23–2300).

Drive Axle: Manufacturer — Dana Corp., Model GT-20. Axle serves as a hydraulic fluid reservoir and mates directly with the transmission. Approximately 5 qt (4.7 l) capacity.

Brakes: Mechanical drum type, 7 in. (17.8 cm) dia. x 1-3/4 in. (45 mm) wide. Individually controlled by two pedals connected by cable and conduit for steering assist. Pedals may be latched together for two wheel braking. Lever provided for parking brake.

Tires, Wheels, Pressure:

Front Tires — 23 x 8.00 – 12

Rear Tires — 16 x 6.50 – 8

All tires 4 ply rating, tubeless type.
(Pressure — 20 psi (138 kPa).

Steering: 13 in. (33 cm) steering wheel. TRW power steering valve.

Main Frame: Frame is welded, formed steel.

Instrumentation: Fuel gauge, water temperature gauge, hour meter and warning lights for high temperature shutdown, oil pressure and amperage are mounted on the console.

Controls: Throttle, choke, PTO switch, parking brake, implement lift and ignition switch are all hand-operated. Forward/reverse traction pedal and turning brakes are foot operated.

PTO Drive: Splined PTO shaft is clutched by a torque-teamed HA Section, spring tensioned V-belt directly from engine output shaft. PTO shaft engaged by electric clutch/brake assembly. PTO speed — 2200 RPM @ 3250 RPM engine speed.

Implement Connection — Universal joint and telescoping shaft assembly.

Lift Cylinders: Two, with 2 in. (51 mm) bore, 3.5 in. (89 mm) stroke.

Interlock Switches: Prevents engine starting if traction pedal or PTO switch are engaged. Stops engine if operator leaves seat with either traction pedal or PTO switch engaged.

Dimensions and Weight (approx.):

Traction Unit w/Standard Seat

Length:	82 in.
Width: (Rear Wheels)	44 in.
Height:	50 in.
Weight:	1120 lb

OPTIONAL EQUIPMENT

52" Side Discharge Cutting Unit—Model No. 30555

52" Rear Discharge Cutting Unit—Model No. 30568

62" Side Discharge Cutting Unit—Model No. 30551

62" Guardian Recycler Cutting Unit—Model No. 30569

72" Side Discharge Cutting Unit—Model No. 30553

48" V-Plow Kit — Model No. 30750

V-Plow Mounting Kit — Model No. 30749. Required with 30750 V-Plow. 11-0390 Tire Chains recommended.

Arm Rest Kit — Model 30707. Fits Models 30769, 30772 Seat Kits.

Rear Discharge Shield Kit — Model No. 30578.

Rear Weight Box Kit — Part No. 24–5780.

Grass Collection System — Model No. 30502, 52" Blower Kit (for Model 30555 deck) or Model 30506, 62" Blower Kit (for Model 30551 deck) can be used with either Model No. 30504, 9 cu. fit. Hopper Kit or Model No. 30505, 15 cu. ft. Hopper Kit.

Wide Tires w/rim: 23 x 10.5 –12, 6 ply — Part No. 62–7020.

Wide Tires w/rim: 23 x 10.5 –12, 6 ply — Part No. 69–9870.

Wheel Weights: — Part No. 11–0440. 50 lb (23 kg).

SPECIFICATIONS

Rear Weight Kit — Part No. 24–5780. 70 lb (31.8 kg).

Weight Kit–20 lb. — Part No. 92–8763.

Tire Chains — Part No. 11–0390.

Standard Seat Kit — Model No. 30624.

Deluxe Seat Kit — Model No. 30625.

Refer to Specifications section of individual Cutting Unit Operator's Manuals for cutting unit options.

LOOSE PARTS

NOTE: Use this chart as a checklist to assure all parts have been received. Without these parts, total set–up cannot be completed.

DESCRIPTION	QTY.	USE
Steering Wheel Nut Screw Cap	1 1 1 1	Install Steering Wheel.
Manual Tube R–Clamp Capscrew Washer	1 2 2 2	Install on right underside of seat.
Roll Pin Capscrew 5/16 - 18 x 1–3/4 in. Locknut 5/16 - 18	1 2 2	Secure universal shaft to implement.
Cylinder Pin Cotter Pin 3/16 x 1–1/2 in.	2 4	Secure deck lift arms to lift cylinders.
Brake Return Springs Pivot Pin Assemblies Cotter Pin 1/8 x 1–1/4 in.	2 2 2	Mount deck lift arms.
Operator's Manual (Traction Unit) Parts Catalog	2 1	
Registration Card	1	Fill out and return to Toro

SET–UP INSTRUCTIONS

WARNING

PTO universal shaft is attached to traction unit frame. DO NOT ENGAGE PTO without first removing universal shaft or coupling it to a suitable implement.

INSTALL STEERING WHEEL

1. Remove steering wheel from seat plate. Remove screw and cap from steering wheel (Fig.1).

2. Remove jam nut from steering shaft. Make sure foam seal is on steering shaft (Fig.1). Slide steering wheel onto steering shaft.

3. Secure steering wheel to shaft with jam nut and tighten it to 10–15 ft–lb.

4. Mount cap to steering wheel with screw.

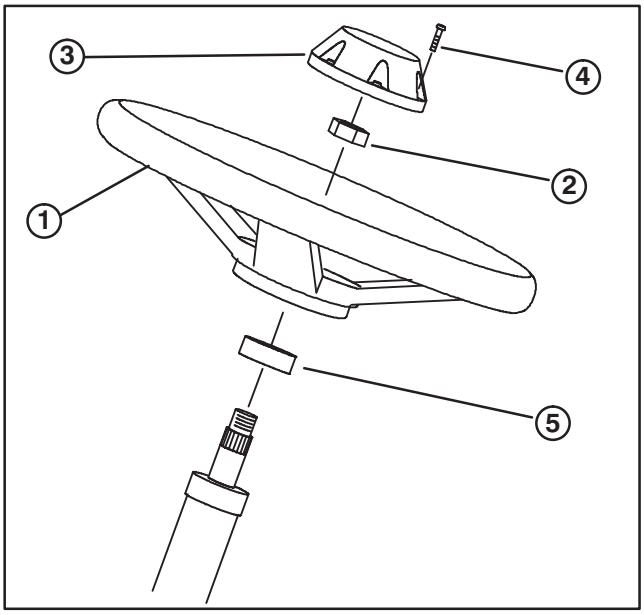

Figure 1

1. **Steering wheel**
2. **Jam nut**
3. **Cap**
4. **Screw**
5. **Foam seal**

INSTALL SEAT

The Groundsmaster 225 is shipped without the seat assembly. Either optional Seat Kit, Model No. 30769 or 30772 must be installed.

Seat Kit, Model No. 30624, Standard Seat:

1. Attach "U" springs to seat mounting brackets using bolts and locknuts as shown in figure 2.

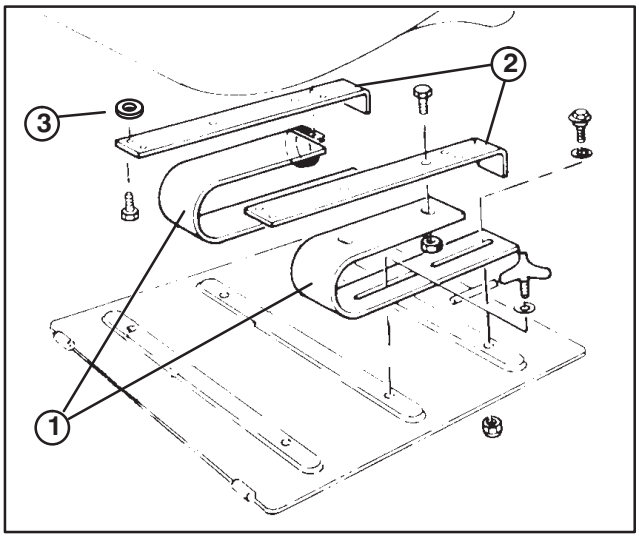

Figure 2

1. "U" spring
2. Seat mounting bracket
3. Spacer

2. Secure seat mount assemblies to bottom of seat with (4) flange head capscrews and (4) spacers. (Fig. 2). Spacers to be positioned between seat and seat mount.

Note: Mount the bracket in the forward set of tapped mounting holes in seat.

3. Remove hair pin cotter and pull back on locking spring flap to pivot mounting plate forward (Fig. 3).

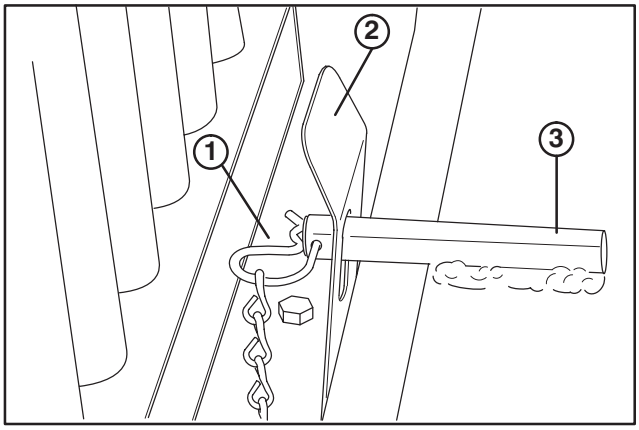

Figure 3

1. Hair pin
2. Lock spring flap
3. Seat mounting plate

4. Hold mounting plate in upright position with support rod (Fig. 4).

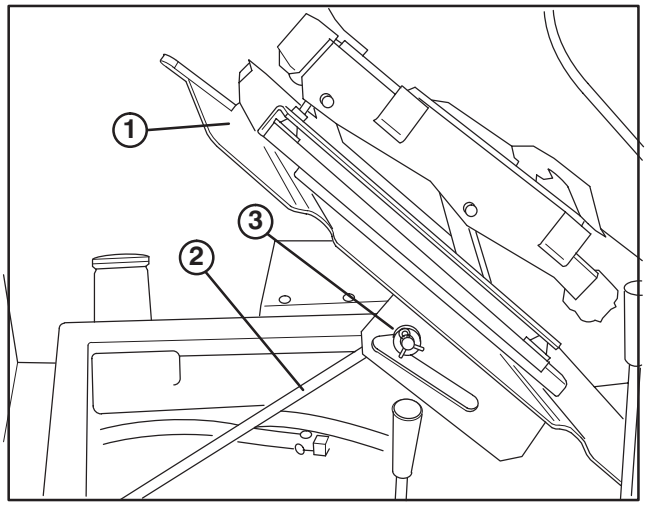

Figure 4

1. Mounting plate
2. Support rod
3. Indent

5. Mount seat and spring assembly to rear holes in seat mounting plate with two shoulder bolts, small I.D. flat washers and locknuts (Fig. 2 & 5).

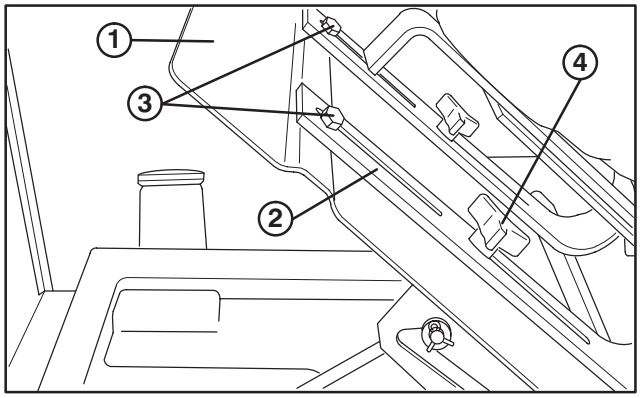

Figure 5

1. Mounting plate
2. Seat spring
3. Shoulder bolt with washer and locknut (2)
4. Adjustment handle (2)

6. Secure front slot of seat springs to traction unit front mounting holes with adjustment handles and flatwashers (Fig. 2 & 5).

7. Adjust seat to desired operating position. Loosen adjustment handles, slide seat fore or aft in slotted holes and tighten adjustment handles to secure in place.

8. Connect seat switch connector to traction unit wire harness connector.

Seat Kit, Model No. 30625, Deluxe Seat:

1. Position threaded mounting studs of seat suspension into holes in seat mounting plate.

2. Remove hair pin cotter and pull back on locking spring flap to pivot mounting plate forward (Fig. 3).

3. Hold mounting plate in upright position with support rod (Fig. 4).

4. Secure seat suspension to seat mounting plate with (4) flange locknuts (Fig. 6 & 7).

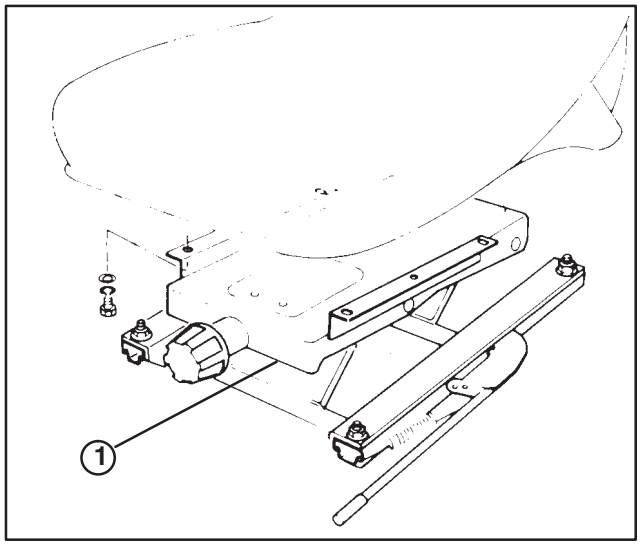

Figure 6
1. Seat suspension

5. Mount seat to seat suspension with (4) capscrews, lockwashers and flatwashers (Fig. 6 & 7).

6. Adjust seat for operator's comfort and weight. To adjust seat fore and aft, pull handle on left side of seat assembly outward (Fig. 7). Release handle to lock seat position. To adjust for operator's weight, turn spring tension knob; clockwise to increase tension, counterclockwise to decrease spring tension (Fig. 7).

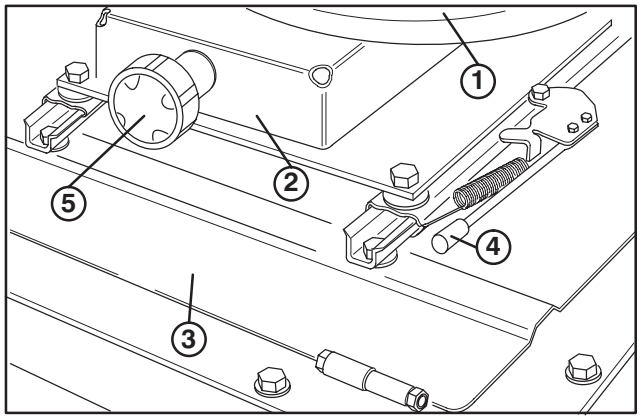

Figure 7
1. Seat
2. Suspension assembly
3. Mounting plate
4. Forward/backward handle
5. Spring tension knob

7. Connect seat switch connector to traction unit wire harness connector.

INSTALL MANUAL TUBE

1. Remove manual tube and R–clamps secured to seat plate. Retain (2) mounting capscrews and flatwashers.

2. Loosely mount R–clamps to outer holes in right side of seat with (2) capscrews and flatwashers previously removed. (Fig. 8).

3. Install manual tube into R–clamps, insert manual into tube and thread cap into tube (Fig. 8). Tighten capscrews.

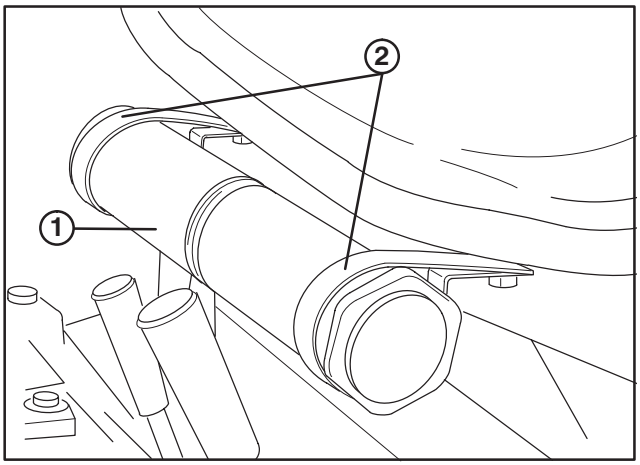

Figure 8
1. Manual tube
2. R–clamps

CONNECT BATTERY

1. LIft engine cover. Check to see that the battery is securely fastened in place (Fig. 9).

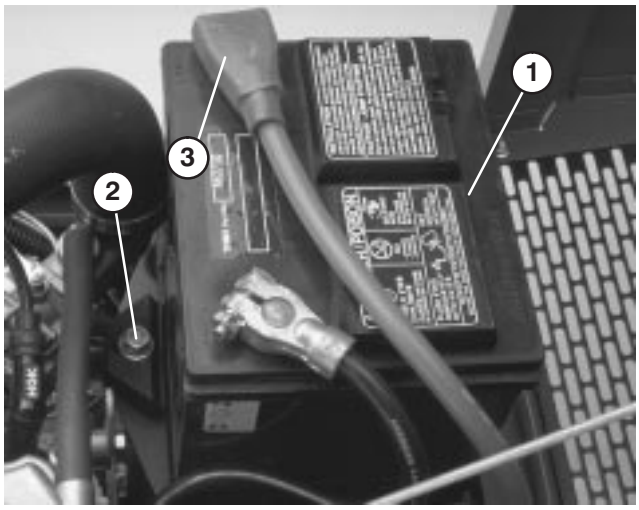

Figure 9
1. Battery
2. Battery securing bolt (2)
3. Rubber boot

2. Check battery charge with a hydrometer. If battery needs charging, be sure at least one of the battery cables is disconnected from the battery before the charger is connected.

3. Remove tape from battery cables and secure the cables to the proper battery post. The positive (+) red cable goes to the positive post and the negative (–) black cable goes to the negative post on the battery.

SET–UP INSTRUCTIONS

WARNING

Connecting cables to the wrong post could damage the electrical system and result in personal injury.

Note: Make sure battery cables are routed away from any sharp edges or moving parts.

4. Coat the terminal with sealant such as Grafo 112X, Toro Part No. 505-47 and install the rubber boot onto positive terminal.

CHECK TIRE PRESSURE

The tires are over–inflated for shipping. Therefore, release some of the air to reduce the pressure. Correct air pressure in front and rear tires is 20 psi.

INSTALL REAR WEIGHT

Two Wheel Drive Groundsmaster 225 Traction Unit complies with ANSI B71.4–1990 Standard when equipped with rear weight. 55 lbs. of rear weight is installed, at the factory, on the Groundsmaster 225 Traction Unit. Use chart below to determine combinations of additional weight requirements. Order parts from your local Authorized Toro Distributor.

	Additional Rear Weight Required	Left Side Weight Required	Weight Part Number	Weight Description	Qty.
52” Rear Discharge Deck (Model 30568)	0 lb.	0 lb.	–	–	–
52” Side Discharge Deck (Model 30555)	0 lb.	0 lb.	–	–	–
52” Side Discharge Deck with 15 cu. ft. Hopper	0 lb.	250 lb.	*77–6700 & 92–9670 & 24–5780 & 24–5790 325–14 3253–7 57–4230 3217–9	75 lb. Wheel Weight & Bracket Kit & Rear Weight Kit & Rear Weight–35 lb. Screw Lockwasher Spacer Nut	1 1 2 1 2 2 2 2
62” Side Discharge Deck (Model 30564)	70 lb.	0 lb.	24–5780	Rear Weight Kit	1
62” Side Discharge Deck with 9 cu. ft. Hopper	50 lb.	0 lb.	24–5780	Rear Weight Kit	1
62” Side Discharge Deck with 15 cu. ft. Hopper	0 lb.	180 lb.	*77–6700 & 92–9670 & 24–5780 & 24–5790 325–14 3253–7 57–4230 3217–9	75 lb. Wheel Weight & Bracket Kit & Rear Weight Kit & Rear Weight–35 lb. Screw Lockwasher Spacer Nut	1 1 1 1 2 2 2 2
62” Guardian Recycler Deck (Model 30569)	50 lb.	0 lb.	24–5780	Rear Weight Kit	1
72” Side Discharge Deck (Model 30575)	85 lb.	0 lb.	24–5780 & 24–5790 325–14 3253–7 57–4230 3217–9	Rear Weight Kit & Rear Weight–35 lb. Screw Lockwasher Spacer Nut	1 1 2 2 2 2

***75 lb. wheel weight (included with a 15 cu. ft. Hopper) required on left wheel**

CHECK ENGINE OIL

The engine is shipped with 3.2 qt (3 l) of oil in the crankcase; however, level of oil must be checked before and after the engine is first started.

1. Position machine on a level surface.

2. Open the hood.

3. Remove dipstick and wipe it with a clean rag. Insert dipstick into the tube and make sure it is seated fully. Remove dipstick and check level of oil (Fig. 10). If oil level is low, remove oil fill cap (Fig. 11) and add enough oil to raise level to FULL mark on dipstick. Do not overfill.

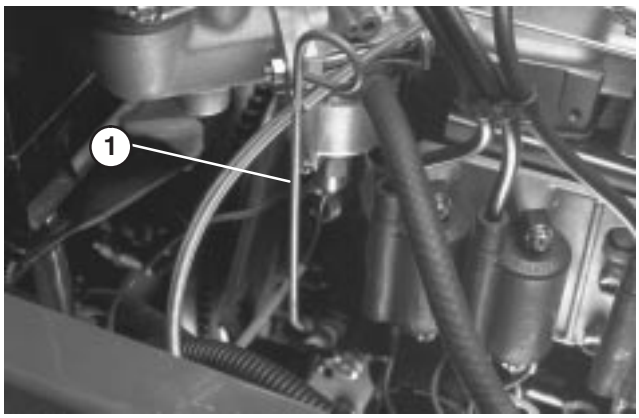

Figure 10

1. **Engine oil dipstick**

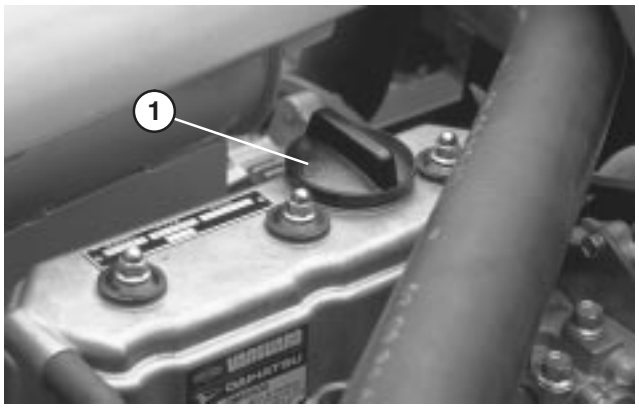

Figure 11

1. **Engine oil fill**

Note: If level of oil is at the ADD mark on the dipstick, add 1 pint (0.47 l) of oil and recheck level. Do not overfill.

4. The engine uses any high-quality detergent oil having the American Petroleum Institute — API —"service classification" SE/SF. Use chart below to select the proper viscosity grade for the temperature expected.

IMPORTANT: Check level of oil every 5 operating hours or daily. Change oil initially after the first 50 hours of operation thereafter change oil and filter after every 200 hours of operation.

5. Insert dipstick into tube and install fill cap.

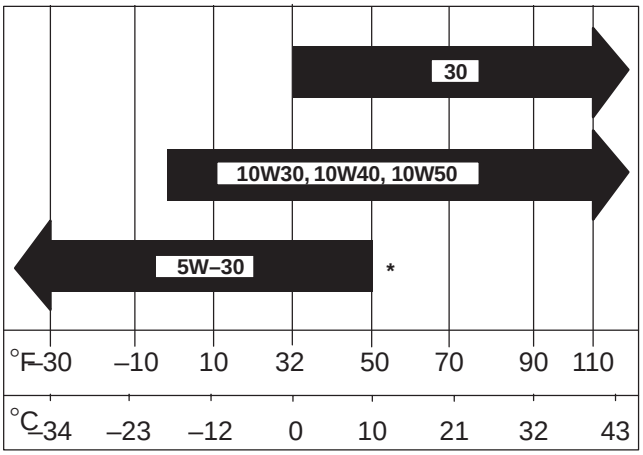

***** A synthetic 5W30 oil may be used.

CHECK COOLING SYSTEM

Clean debris off screen and front of radiator daily (Fig. 12), hourly if conditions are extremely dusty and dirty; refer to Cleaning Radiator and Screen Section.

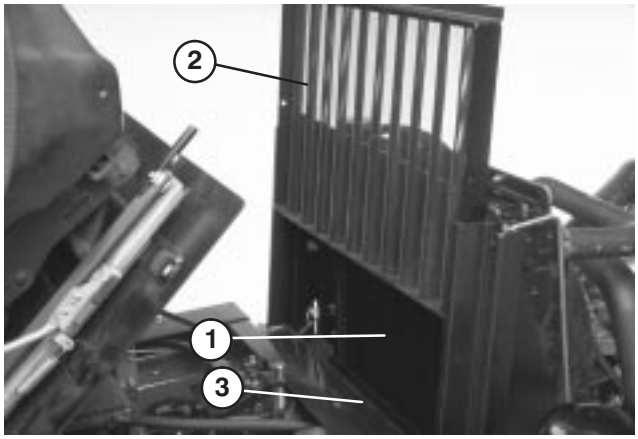

Figure 12

1. **Radiator**
2. **Radiator screen**
3. **Screen channel**

The cooling system is filled with a 50/50 solution of water and permanent ethylene glycol anti-freeze. Check level of coolant at beginning of each day (Fig. 13) before starting the engine. Capacity of cooling system is approximately 6 quarts (5.7 l).

1. Carefully remove radiator cap and the expansion tank cap (Fig. 13).

CAUTION

If engine has been running, pressurized hot coolant can escape when radiator cap is removed and cause burns.

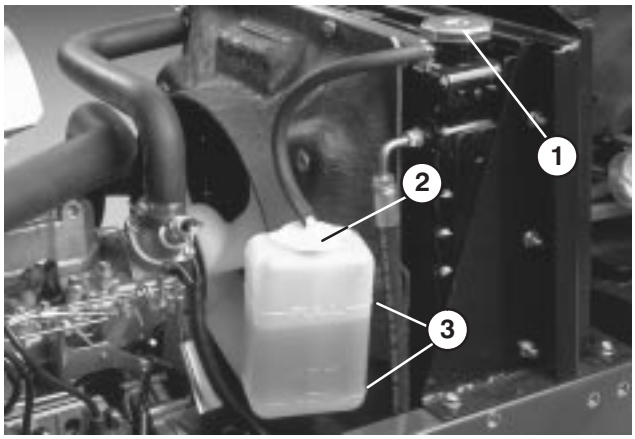

Figure 13

1. **Radiator cap**
2. **Expansion tank cap**
3. **Expansion tank fill marks**

2. Check level of coolant in radiator. Radiator should be filled to the top of the filler neck and the expansion tank filled to between the marks on its side.

3. If coolant level is low, replenish the system. DO NOT OVERFILL.

4. Install radiator cap and expansion tank cap.

CHECK HYDRAULIC SYSTEM FLUID

The hydraulic system was designed to operate on any high quality detergent oil having the American Petroleum Institute—API—"service classification" SF, CC or CD. Oil viscosity — weight — must be selected according to anticipated ambient temperature. Temperature/viscosity recommendations are:

Expected Ambient Temperature	Recommended Viscosity and Type
(Extreme) over 90° F	SAE 30, Type SF, CC or CD engine oil.
(Normal) 40-100° F	SAE 10W-30 or 10W-40. Type SF, CC or CD engine oil.
(Cool—Spring/Fall) 30—50° F	SAE 5W-30, Type SF, CC or CD engine oil.
(Winter) Below 30° F	Type "F" or "FA" ATF Automatic Transmission Fluid.

Note: Do not mix engine oil and automatic transmission fluid or hydraulic component damage may result. When changing fluids, also change transmission filter. **DO NOT USE DEXRON II ATF.**

The axle housing acts as the reservoir for the system. The transmission and axle housing are shipped from the factory with approximately 5 quarts (4.7 l) of SAE 10W-30 engine oil. However, check level of transmission oil before engine is first started and daily thereafter.

1. Position machine on a level surface. Place all control in neutral position and start the engine. Run engine at lowest possible RPM to purge the system of air. **DO NOT ENGAGE PTO.** Cycle steering wheel several times fully to the left and right. Raise the cutting unit to extend lift cylinders, aiming steering wheels straight forward and stop the engine.

2. Remove dipstick cap (Fig. 14) from filler neck and wipe it with a clean rag. Screw dipstick cap finger-tight onto filler neck; then remove it and check level of fluid. If level is not within 1/2 inch (13 mm) from the groove in the dipstick (Fig. 14), add SAE 10W-30 engine oil, or, if used, automatic transmission fluid to raise level to groove mark. Do not overfill.

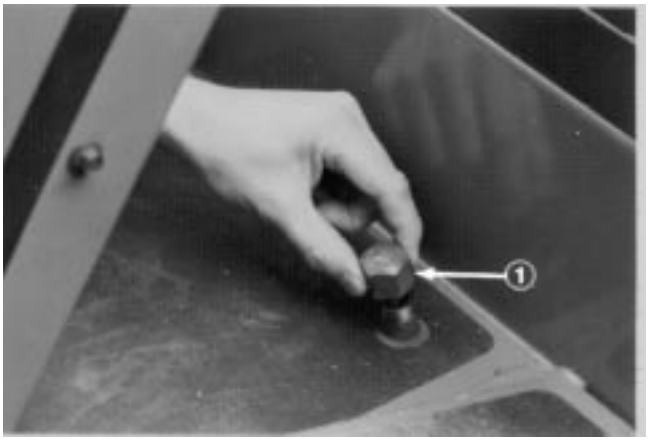

Figure 14

1. **Hydraulic system reservoir fluid/add dipstick cap**

IMPORTANT: When adding transmission fluid to the hydraulic system, use a funnel with a fine wire screen — 200 mesh or finer — and make sure funnel and transmission fluid are immaculately clean. This procedure prevents accidental contamination of the hydraulic system.

3. Thread dipstick fill cap finger-tight onto filler neck. It is not necessary to tighten cap with a wrench.

4. Check all hoses and fittings for leaks.

FILL FUEL TANK

THE TORO COMPANY STRONGLY RECOMMENDS THE USE OF FRESH, CLEAN, UNLEADED REGULAR GRADE GASOLINE IN TORO GASOLINE POWERED PRODUCTS. UNLEADED GASOLINE BURNS CLEANER, EXTENDS ENGINE LIFE, AND PROMOTES GOOD STARTING BY REDUCING THE BUILD—UP OF COMBUSTION CHAMBER DEPOSITS. LEADED GASOLINE CAN BE USED IF UNLEADED IS NOT AVAILABLE.

NOTE: NEVER USE METHANOL, GASOLINE CONTAINING METHANOL, GASOLINE CONTAINING MORE THAN 10% ETHANOL, GASOLINE ADDITIVES, PREMIUM GASOLINE OR WHITE GAS BECAUSE ENGINE FUEL SYSTEM DAMAGE COULD RESULT.

1. Clean area around fuel tank cap (Fig. 15).

2. Remove fuel tank cap.

3. Fill tank to about one inch below top of tank, (bottom of filler neck). **DO NOT OVERFILL.** Then install cap.

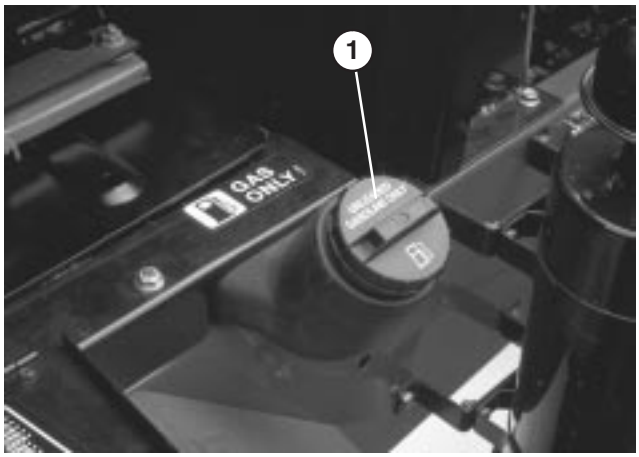

Figure 15

1. **Fuel tank cap**

DANGER

Because gasoline is flammable, caution must be used when storing or handling it. Do not fill fuel tank while engine is running, hot or when machine is in an enclosed area. Vapors may build up and be ignited by a spark or flame source many feet away. DO NO SMOKE while filling the fuel tank to prevent the possibility of an explosion. Always fill fuel tank outside and wipe up any spilled gasoline before starting engine. Use a funnel or spout to prevent spilling gasoline, and fill tank no higher than to bottom of filter screen. DO NOT OVER FILL. Store gasoline in a clean safety approved container and keep the cap on the container. Keep gasoline in a cool, well—ventilated place; never in an enclosed area such as a hot storage shed. To assure volatility, do not buy more than a 30 day supply of gasoline. Gasoline is a fuel for internal combustion engines; therefore do not use it for any other purpose. Since many children like the smell of gas, keep it out of their reach because the fumes are explosive and dangerous to inhale.

CONTROLS

Service Brakes (Fig. 16) — The left and right brake pedals are connected to the left and right front wheels. Since both brakes work independently of each other, the brakes can be used to turn sharply or to increase traction if one wheel tends to slip while operating on certain slope conditions. However, wet grass or soft turf could be damaged when brakes are used to turn sharply. To make a “quick-stop”, depress both brake pedals together. Always lock brakes together when transporting the traction unit.

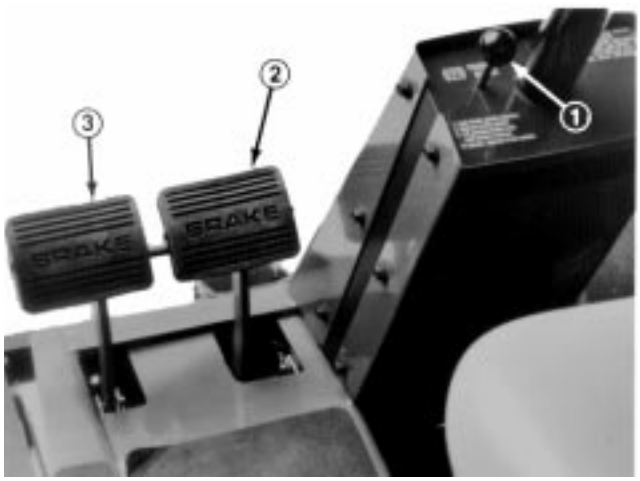

Figure 16

1. Parking brake knob
2. Right brake pedal
3. Left brake pedal

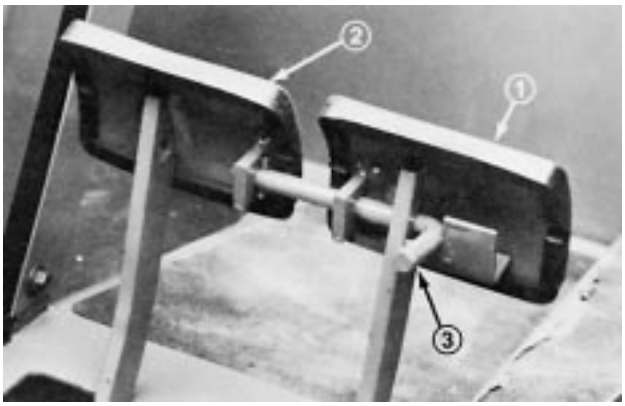

Figure 17

1. Left brake pedal
2. Right brake pedal
3. Lock arm

Parking Brake — Whenever the engine is shut off, the parking brake must be engaged to prevent accidental movement of the machine. To engage the parking brake, push lock arm (Fig. 17) on left brake pedal so that it locks together with the right pedal. Next, push down fully on both pedals and pull parking brake knob out (Fig. 16) then release the pedals. To release parking brake, depress both pedals until parking brake knob retracts. Before starting the engine, however, lock arm may be disengaged from left brake pedal so both pedals work independently with each front wheel.

Amp Light (Fig. 18) — The amp light should be off when engine is running. If it is on, the charging system should be checked and repaired if necessary.

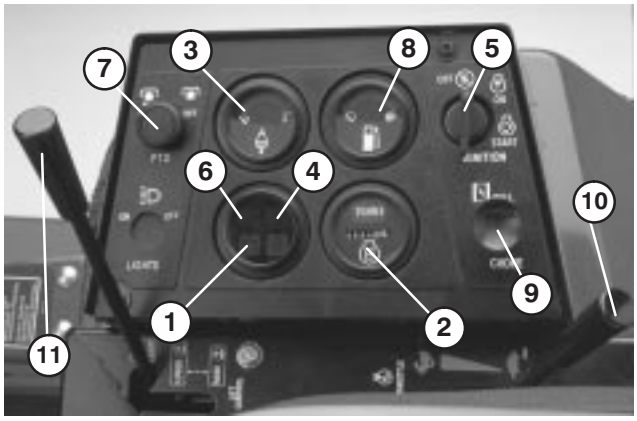

Figure 18

1. Amp light
2. Hour meter
3. Coolant temperature gauge
4. High temperature shutoff light
5. Ignition key switch
6. Oil pressure light
7. PTO switch
8. Fuel gauge
9. Choke
10. Throttle
11. Hydraulic lift lever

Hour Meter (Fig. 18) — Accumulated engine operating time registers on the hour meter.

Temperature Gauge and High Temperature Light (Fig. 18) — The coolant temperature gauge registers the coolant temperature in the system. If the temperature gets too high the engine will automatically shut off and the High Temperature Shutoff Light will light. When this happens, turn the ignition key off, check radiator for debris, check the fan belt and check the expansion tank for proper coolant level. The high temperature shutoff will automatically reset when the coolant temperature has reached a safe level.

Low Oil Pressure Light (Fig. 18) — If engine oil pressure falls below a safe level, the light glows. Stop engine and repair before resuming operation.

PTO Switch (Fig. 18) — Pull up on switch handle to ENGAGE electric PTO clutch. Push switch down to DISENGAGE electric PTO clutch. The only time the PTO switch should be in the ENGAGE position is when the implement is down in operating position and ready to begin operation.

Ignition Key Switch (Fig. 18) —The ignition switch, which is used to start and stop the engine, has three positions: OFF, RUN and START. Rotate key clockwise — START position — to engage starter motor. Release key when engine starts. The key will move automatically to the ON position. To shut engine off, rotate key counterclockwise to the OFF position.

Choke (Fig. 18) — To start engine, close carburetor choke by pulling choke control upward. After engine starts, regulate choke to keep engine running smoothly. As soon as possible, open the choke by pushing it inward. A warm engine requires little or no choking.

Throttle (Fig. 18) — Throttle is used to operate engine at various speeds. Moving throttle forward increases engine speed — FAST; rearward decreases engine speed — SLOW. The throttle controls the speed of the cutter blades and, in conjunction with traction pedal, controls ground speed of the traction unit.

Hydraulic LIft Lever (Fig. 18) — The hydraulic lift lever has three positions: FLOAT, TRANSPORT and RAISE. To lower cutting unit to the ground, move lift lever forward into notch in seat platform — FLOAT. The FLOAT position is used for mowing and when machine is not in operation. To raise cutting unit, pull lift lever rearward to the RAISE position. After cutting unit is raised, allow lift lever to move to the TRANSPORT position. Cutting unit must be raised when driving from one work area to another.

CAUTION

Never raise cutting unit while blades are rotating because it is hazardous.

Traction Pedal (Fig. 19) — Traction pedal has two functions: one is to make the machine move forward, the other is to make it move rearward. Using the heel and toe of the right foot, depress top of pedal to move forward and bottom of pedal to move rearward. Ground speed is proportionate to how far pedal is depressed. For maximum ground speed, traction pedal must be fully depressed while throttle is in FAST position. Maximum speed forward is 10 mph (16 Km/hr) (approx.). To get maximum power under heavy load or when ascending a hill, have throttle in FAST position while depressing traction pedal slightly to keep engine rpm high. When engine rpm begins to decrease, release traction pedal slightly to allow rpm to increase.

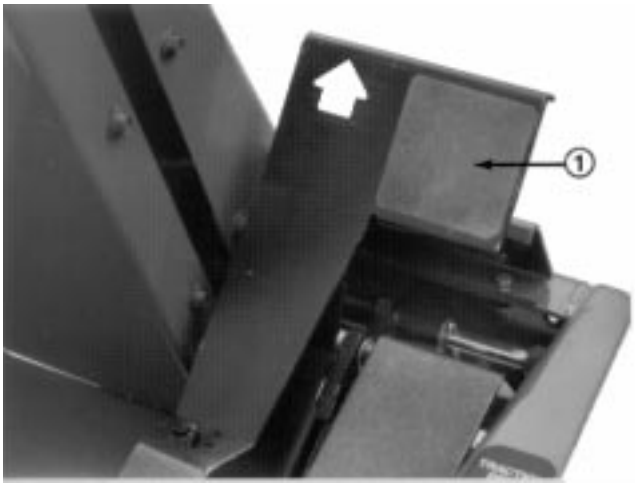

Figure 19

1. Traction pedal

Seat Adjusting Handle — To adjust seat, loosen adjusting knobs and slide seat to desired position. Tighten knobs to lock seat in place.

Seat Adjusting Handle — Deluxe Seat — To adjust seat, move lever on left side outward, slide seat to desired position and release lever so it will lock in track.

OPERATING INSTRUCTIONS

STARTING/STOPPING ENGINE

1. Ensure parking brake is set, PTO switch is in OFF position and lift lever is in TRANSPORT or FLOAT position (Fig. 18). Remove foot from traction pedal and insure it is in neutral.

2. Pull choke (Fig. 18) to full choke position and move throttle control (Fig. 18) to slow position.

3. Turn key in ignition switch to START position (Fig. 18). Release key immediately when engine starts and allow it to return to RUN position. Regulate choke to keep engine running smoothly.

Note: Do not run starter motor more than 20 seconds at a time or premature starter failure may result. If engine fails to start after 20 seconds, turn key to OFF position, recheck controls and procedures, wait 10 additional seconds and repeat starter operation.

4. When engine is started for the first time, or after engine oil change, or overhaul of engine, transmission or axle, operate the machine in forward and reverse for one to two minutes. Also operate the lift lever and PTO lever to assure proper operation of all parts. Turn power steering wheel to the left and right to check steering response. Then shut engine off and check fluid levels, check for oil leaks, loose parts and any other noticeable malfunctions.

CAUTION

Shut engine off and wait for all moving parts to stop before checking for oil leaks, loose parts or other malfunctions.

5. To stop engine, move throttle control backward to SLOW position, move PTO switch to OFF position and rotate ignition key to OFF. Remove key from switch to prevent accidental starting.

CHECKING INTERLOCK SYSTEM

The purpose of the safety interlock system is to prevent the engine from cranking or starting unless the traction pedal is in neutral and the PTO switch is in the OFF position. In addition, the engine will stop when the PTO control is engaged or traction pedal is depressed with operator off the seat.

1. Move PTO switch to OFF position and remove foot from traction pedal so it is fully released.

CAUTION

Do not disconnect the safety switches because they are for the operator's protection. Check operation of the switches daily to be sure the interlock system is operating correctly. If a switch is malfunctioning, replace it before operating the machine. Replace the switches every 2 years to be sure of maximum safety.

2. Rotate the ignition key to START. Engine should crank. If engine cranks, proceed to step 3. If engine does not crank, there may be a malfunction in the interlock system.

3. Raise off the seat and engage the PTO switch while the engine is running. The engine should stop within 2 seconds. If engine stops, the switch is operating correctly; thus, proceed to step 4. If engine does not stop, there is a malfunction in the interlock system.

4. Raise off the seat and depress the traction pedal while engine is running the PTO lever is disengaged. The engine should stop within 2 seconds. If engine stops, the switch is operating correctly; thus, proceed to step 5. If engine does not stop, there is a malfunction in the interlock system.

5. With parking brake engaged, engine running and PTO lever disengaged, depress traction pedal. The engine should stop within 2 seconds. If engine stops, the switch is operating correctly; thus, continue operation. If engine does not stop, there is a malfunction in the interlock system.

OPERATING CHARACTERISTICS

Practice driving the GROUNDSMASTER® 225 before initial operation because it has a hydrostatic transmission and its characteristics are different than some turf maintenance machines. Some points to consider when operating the traction unit and cutting unit are the transmission, engine speed, load on the cutting blades, and the importance of the brakes.

To maintain enough power for the traction unit and cutting unit while mowing, regulate traction pedal to keep engine rpm high and somewhat constant. A good rule to follow is: decrease ground speed as the load on the cutting blades increases; and increase ground speed as load on the blades decreases. This allows the engine, working with the transmission, to sense the proper ground speed while maintaining high blade tip speed necessary for good quality-of-cut. Therefore, allow traction pedal to move upward as engine speed decreases, and depress pedal slowly as speed increases.

By comparison, when driving from one work area to another—with no load and cutting unit raised—have throttle in FAST position and depress traction pedal slowly but fully to attain maximum ground speed.

CAUTION: This product may exceed noise levels of 85 dB(A) at the operator position. Ear protectors are recommended for prolonged exposure to reduce the potential of permanent hearing damage.

CAUTION

Adequate rear weight is necessary to prevent the rear wheels from leaving the ground. Do not stop suddenly while cutting unit or implement is raised. Do not travel down hill with the cutting unit or implement raised. If the rear wheels leave the ground, steering is lost.

Another characteristic to consider is the operation of the brakes. The brakes can be used to assist in turning the machine; however, use them carefully, especially on soft or wet grass because the turf may be torn accidentally. The brakes can be used to great advantage to control the direction of the cutting unit when trimming along fences or similar objects. The other benefit of the brakes is to maintain traction. For example; in some slope conditions, the uphill wheel slips and loses traction. If this situation occurs, depress uphill brake pedal gradually and intermittently until the uphill wheel stops slipping; thus, increasing traction on the downhill wheel. If independent braking is not desired, engage the lever on left brake pedal with right pedal. This provides simultaneous braking at both wheels.

Before stopping the engine, disengage all control and move throttle to SLOW. Moving throttle to SLOW reduces high engine speed, noise and vibration. Turn ignition key to OFF to stop the engine.

PUSHING OR TOWING TRACTION UNIT

In an emergency, the traction unit can be pushed or towed for a very short distance. However, Toro does not recommend this as standard procedure.

IMPORTANT: Do not push or tow the traction unit faster than 2 to 3 mph (3.2 to 4.8 Km/hr) because transmission may be damaged. IF traction unit must be moved a considerable distance, transport it on a truck or trailer. Whenever traction unit is pushed or towed, by-pass valve must be open.

1. Remove hair pin, pivot seat platform forward and locate seat support rod in detent notch.

2. Depress and hold the pins located in the center of the two (2) check valve assemblies in the top of the transmission (Fig. 20) while pushing or towing the machine.

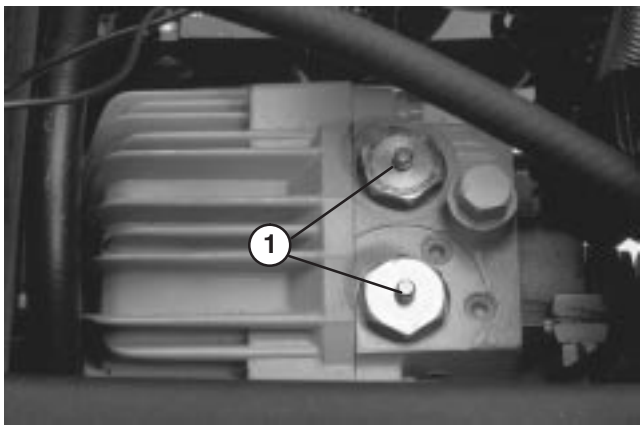

Figure 20

1. Transmission check valve bypass pins (2)

3. Start engine momentarily after repairs are completed and make sure the pins are in the full disengaged (fully up) position.

IMPORTANT: Running the machine with by-pass valve open will cause the transmission to overheat.

LUBRICATION

GREASING BEARINGS AND BUSHINGS

The traction unit has grease fittings that must be lubricated regularly with No. 2 General Purpose Lithium Base Grease. If machine is operated under normal conditions, lubricate all bearings and bushings after every 50 hours of operation or whenever water is used to clean machine. Bearings and bushings must be lubricated daily when operating conditions are extremely dusty and dirty. Dusty and dirty operating conditions could cause dirt to get into the bearings and bushings, resulting in accelerated wear.

Apply a liberal coating of grease to the check valve pins once each year (Fig. 20). The traction unit has bearings and bushings that must be lubricated, and these lubrication points are: PTO universal shaft (Fig. 21); lift arm pivot bushings (Fig. 22), front PTO bearing (Fig. 22); brake pivot bushings (Fig. 23); rear wheel spindle bushings (Fig. 24); steering plate bushings (Fig. 25); axle pin bushing (Fig. 25) PTO tension pivot (Fig. 26) and rear PTO bearing (Fig. 26). Also apply grease to both brake cables at the drive wheel and brake pedal ends (Fig. 23).

1. Wipe grease fitting clean so foreign matter cannot be forced into the bearing or bushing.

2. Pump grease into the bearing or bushing.

3. Wipe up excess grease.

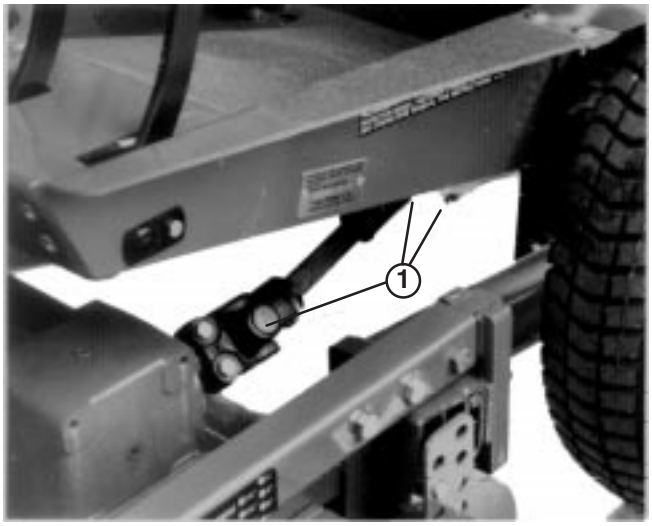

Figure 21
1. PTO shaft lubrication: 3 places on shaft

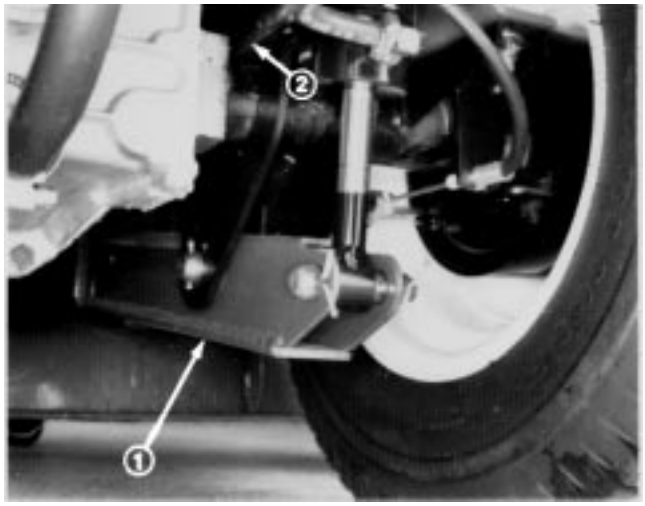

Figure 22
1. Lift arm pivot bushings on each side
2. Front PTO bearing

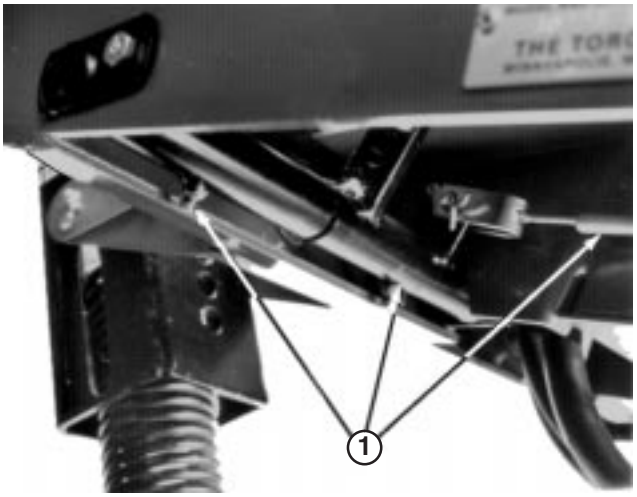

Figure 23
1. Apply grease to both ends of both brake cables and brake pivot tubes.

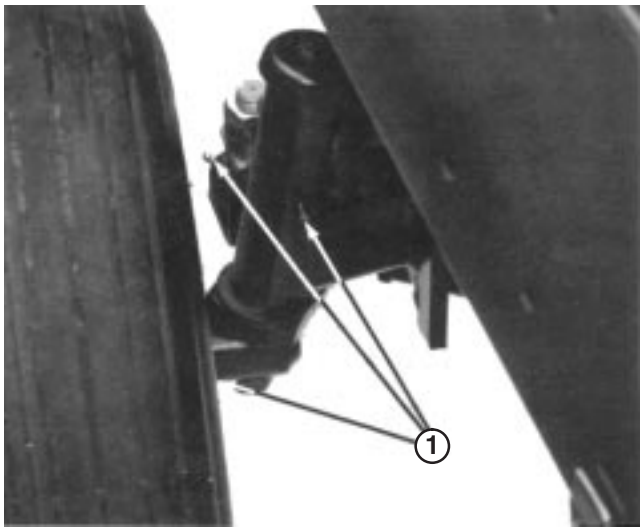

Figure 24
1. Steering arm & wheel lubrication (3 fittings)

LUBRICATION

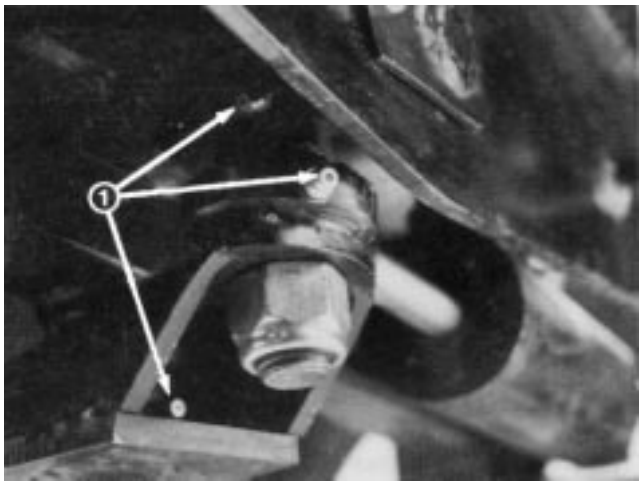

Figure 25

1. Rear axle (3 fittings)

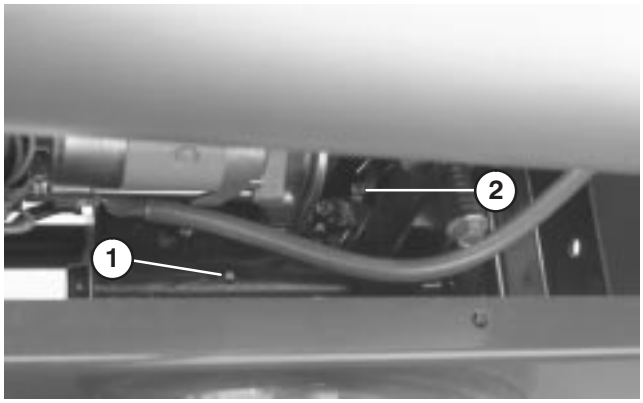

Figure 26

1. Grease PTO tension pivot
2. Rear PTO bearing

SERVICE INTERVAL CHART

GM 225 QUICK REFERENCE AID

CHECK/SERVICE

1. Oil Levels (Engine/Trans.)
2. Coolant level
3. Tire pressure
4. Belts (Fan, PTO)
5. Fuel – Gas Only
6. Battery
7. Grease, Lube points
8. Radiator screen
9. Air Cleaner
10. Electric clutch gap .015-.030
11. PTO Belt tension

FILTERS	PART NO.
A. Air	27-7110
B. Engine Oil**	491056
C. Fuel Line	95–2926
D. Trans. Oil	23-2300

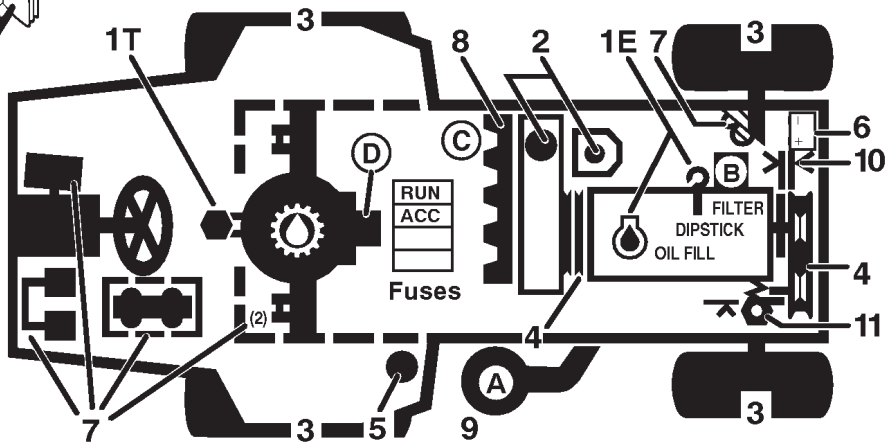

FLUID SPECIFICATIONS *See operator's manual for initial changes.

	TYPE >32°F	TYPE <32°F	CAPACITY	*CHANGE INTERVALS	
Engine oil	SAE 30 SE-SF	SAE 5W-30/SE-SF	3.2 QT. WITH FILTER	200 hrs.	filter 200 hrs.
Trans oil	SAE 10W-30 SF,CC,CD	TYPE F or FA Trans. Fluid	6 QT.	*	filter 200 hrs.
Fuel	UNLEADED GASOLINE		8.5 GAL.	—	filter 400 hrs.
Coolant	50/50 MIX Ethylene glycol anti-freeze/Water		4.5 QT.	2 years	

**OBTAIN REPLACEMENT PART FROM LOCAL BRIGGS & STRATTON DEALER.

95-3008

DAILY MAINTENANCE CHECKLIST

Daily Maintenance: (duplicate this page for routine use)

Maintenance Check Item ➜	**Daily Maintenance Check For Week Of** _____						
	MON	TUES	WED	THURS	FRI	SAT	SUN
✓ Safety Interlock Operation							
✓ Grass Deflector in Down Position							
✓ Brake Operation							
✓ Engine Oil Level							
✓ Cooling System Fluid Level							
✓ Dust Cup and Baffle (Air Filter)							
✓ Radiator & Screen for Debris							
✓ Unusual Engine Noises							
✓ Transmission Oil Level							
✓ Hydraulic Hoses for Damage							
✓ Fluid Leaks							
✓ Tire Pressure							
✓ Instrument Operation							
✓ Condition of Blades							
Lubricate All Grease Fittings[1]							
Touch–up Damaged Paint							

[1] = Immediately after every washing, regardless of the interval listed.

Notation for areas of concern: Inspection performed by_____

Item	Date	Information
1		
2		
3		
4		
5		
6		
7		
8		

Check proper section of Operator's Manual for fluid specifications

GENERAL AIR CLEANER MAINTENANCE

To prevent possible severe engine damage and ensure maximum engine service life, periodically inspect the air cleaner and hose assembly.

1. Assure hose between air cleaner and carburetor is clamped securely in place. Replace the hose if it is cracked or punctured.

2. Check air cleaner body for dent and other damage which could possibly cause an air leak. Replace a damaged air cleaner body.

3. Insure dust cap is sealing around bottom of air cleaner body.

4. Mounting screws and nuts holding air cleaner in place must be tight.

5. Inlet cap must be free of obstructions.

SERVICING DUST CUP AND BAFFLE

Inspect the dust cup and rubber baffle once a week or every 50 hours operation; however, daily or more frequent inspection is required when operating conditions are extremely dusty and dirty. Never allow dust to build up closer than one inch (25 mm) from the rubber baffle.

Note: If conditions are extremely dusty and dirty, begin by checking dust cup and baffle after each day's operation to establish approximately how long an interval passes before dust cup should be emptied. Base further maintenance requirements on this figure. These conditions may be particularly prevalent if the rear discharge cutting unit is attached.

1. Loosen thumb screw until dust cup and baffle can be removed (Fig. 27). Separate dust cup and baffle (Fig. 27).

2. Dump dust out of the dust cup. After cleaning cup and baffle, assemble and reinstall both parts.

SERVICING AIR CLEANER FILTER

Service the air cleaner filter every 200 hours or more frequently in extreme dusty or dirty conditions by washing or using compressed air. Replace the element after every six cleanings (1200 hours) or annually, whichever comes first.

1. Remove and service dust cup; refer to Servicing Dust Cup and Baffle.

2. Remove wing nut w/gasket and slide filter element out of air cleaner body (Fig. 27).

3. Clean the element by washing it in a solution of filter cleaner (Toro Part No. 27-7220, available from Toro) and water, or blow dirt out of filter by using compressed air.

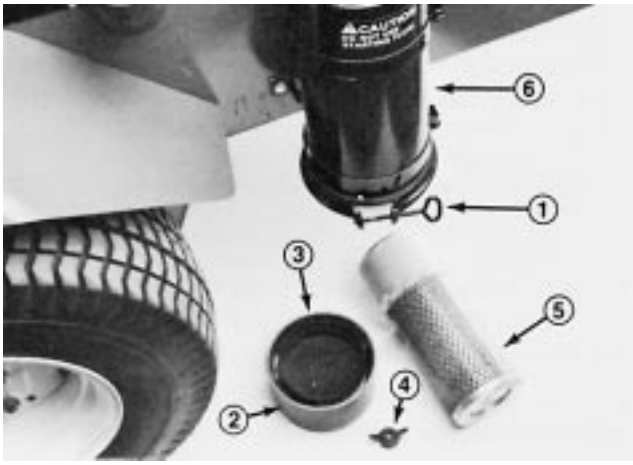

Figure 27

1. Thumb screw
2. Dust cup
3. Baffle
4. Wing nut with gasket
5. Filter element
6. Air cleaner body

Note: Compressed air is recommended when element must be used immediately after servicing because a washed element must be dried before it is used. By comparison, washing the element cleans better than blowing dirt out with compressed air. Remember, though, filter must be washed when exhaust soot is lodged in the filter pores.

Washing Method

IMPORTANT: Do not remove plastic fin assembly because washing removes dust from beneath fins.

A. Prepare a solution of filter cleaner and water and soak filter element about 15 minutes. Refer to directions on filter cleaner carton for complete information.

B. After soaking filter for 15 minutes, rinse it with clear water. Maximum water pressure must not exceed 40 psi (276 kPa) to prevent damage to the filter element.

C. Dry filter element using warm, flowing air (160°F (71°C) max), or allow element to air–dry. Do not use compressed air or a light bulb to dry the filter element because damage could result.

Compressed Air Method

IMPORTANT: Do not remove plastic fin assembly because back-blowing with compressed air removes dust from beneath fins.

A. Blow compressed air from inside to the outside of dry filter element. Do not exceed 100 psi (689 kPa) to prevent damage to the element.

B. Keep air hose nozzle at least one inch (25 mm) from pleated paper, and move nozzle up and down while rotating the filter element. Inspect element when dust and dirt are removed; refer to Inspecting Filter Element.

4. Wipe inside of air cleaner body with a damp cloth to remove excess dust. Slide filter into air cleaner body and secure it in place with wing nut and gasket.

5. Reinstall dust cup and baffle. Move thumb screw behind air cleaner body and tighten it securely.

INSPECTING FILTER ELEMENT

1. Place bright light inside filter.

2. Rotate filter slowly while checking for cleanliness, ruptures, holes, and tears. Replace defective filter element.

3. Check fin assembly, gasket, and screen for damage. Replace filter if damage is evident.

CLEANING RADIATOR AND SCREEN

To prevent the engine from overheating, the screen and front of the radiator must be kept clean. Normally, check the screen and front of radiator daily and, if necessary, clean any debris off these parts. However, it will be necessary to check and clean the screen and radiator frequently in extremely dusty and dirty conditions.

Note: If engine shuts off due to overheating, first check the radiator and screen for excessive buildup of debris.

To thoroughly clean the radiator:

1. Remove the screen.

2. Working from the fan side of the radiator, either spray the radiator with a water hose or blow with compressed air.

3. After the radiator is thoroughly cleaned, clean out debris that may have collected in the channel at the radiator base.

4. Clean and install the screen.

CHANGING ENGINE OIL AND FILTER

Check oil level after each day's operation or each time machine is used. Change oil and filter after first 50 hours and after every 200 hours of operation thereafter. If possible, run engine just before changing oil because warm oil flows better and carries more contaminants than cold oil.

1. Position machine on a level surface.

2. Set drain pan under the oil pan and in line with drain plug (Fig. 28).

3. Clean area around drain plug.

4. Remove oil drain plug and allow oil to flow into drain pan.

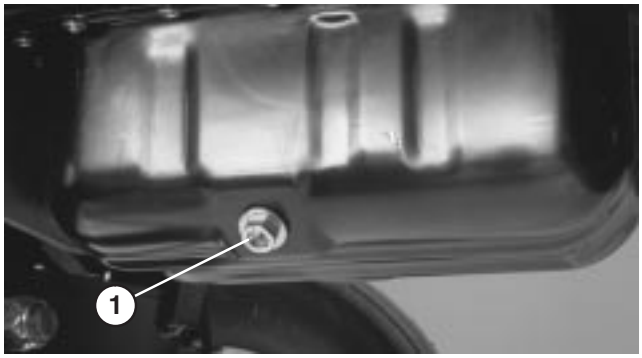

Figure 28
1. Oil drain plug

5. Remove and replace oil filter (Fig. 29); refer to parts catalog for part number.

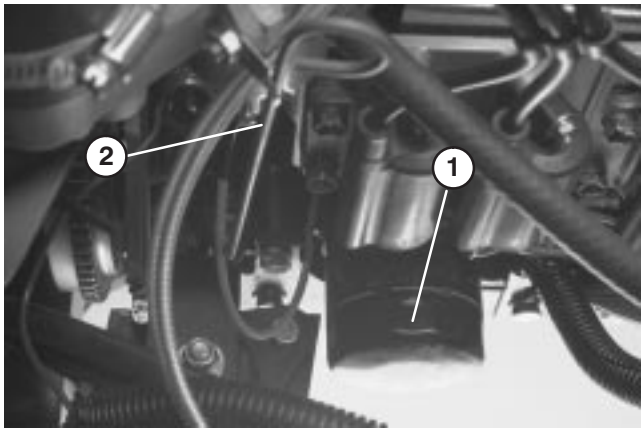

Figure 29
1. Oil filter
2. Dipstick

6. After oil is drained, reinstall drain plug and wipe up any oil that is spilled.

7. Fill crankcase with oil; refer to Check Engine Oil.

SERVICING FUEL SYSTEM

Fuel Tank

Drain and clean fuel if tank becomes contaminated or machine is to be stored for an extended period. Use clean solvent to flush out the tank.

Fuel Lines and Connections

Check lines and connections every 400 hours or yearly, whichever comes first. Inspect for deterioration, damage or loose connections.

Fuel Filter

Replace the fuel filter after every 200 hours or yearly, whichever comes first.

1. Clamp both fuel lines that connect to fuel filter (Fig. 30) so gasoline cannot drain when lines are removed.

2. Loosen hose clamps (Fig. 30) at each end of filter, pull fuel lines off and discard filter.

3. Be sure arrow on side of filter points toward the carburetor. Slide hose clamps onto ends of fuel lines and push fuel lines onto fuel filter. Tighten clamps.

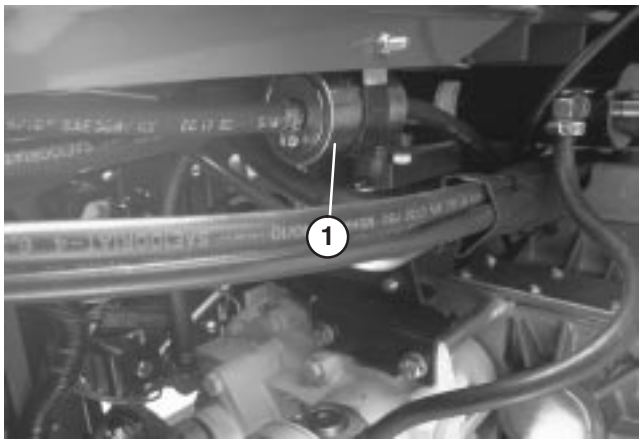

Figure 30
1. **Fuel filter**
2. **Fuel pump**

4. Tighten casing clamp screw.

SERVICING BELTS

Check tension of all belts initially after the first day of operation and every 100 hours thereafter.

ALTERNATOR BELT

To Check Tension:

1. Check tension by depressing belt midway of span with 18 lb of force. Belt should deflect 3/8 in. to 1/2 in. If deflection is incorrect, proceed to step 2. If correct, continue operation.

2. Loosen bolt securing brace to engine and bolt securing alternator to brace (Fig. 31).

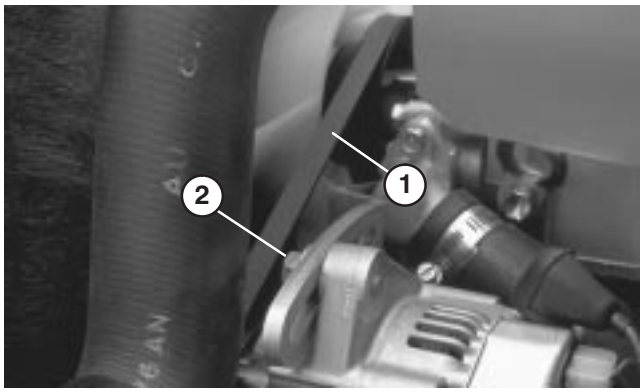

Figure 31
1. **Alternator belt**
2. **Tension adjustment bolt**

3. Insert pry bar between alternator and engine and pry out on alternator.

4. Hold alternator in position after proper belt tension setting is achieved and tighten alternator and brace bolts to secure adjustment.

To Replace Belt:

1. Loosen bolts securing brace to engine and alternator to brace (Fig. 31).

2. Remove two capscrews holding the transmission drive shaft coupler to the engine pulley. Do not remove the drive shaft from the transmission.

3. Move the drive shaft out of the way sot that the fan belt can be removed and a new belt installed. Install the new belt around the fan before positioning it around the drive pulley.

4. Reinstall the drive shaft. Tension the new belt.

5. Check the belt tension after one day's use.

PTO BELT

To Check Tension:

1. Turn engine off and remove the ignition key. Set the parking brake. Raise the engine hood and allow the engine to cool.

2. Loosen the tensioning rod jam nut (Fig. 32).

3. Use a 1/2" wrench to tighten or loosen the belt tensioning spring (Fig. 32). Adjust spring to a length of 1-1/2" (38 mm).

4. Tighten jam nut.

To Replace Belt:

1. Turn off the engine and remove the ignition key. Set the parking brake. Raise the hood and allow the engine to cool.

2. Loosen the tensioning rod jam nut (Fig. 32).

3. Using a 1/2" wrench, loosen the belt tensioning spring (Fig. 32) all the way.

4. Rotate PTO pulley toward the engine and remove the belt (Fig. 33).

5. Install the new PTO belt and re−tension the pulley spring to 1-1/2" (38 mm) (Fig. 32).

6. Tighten the jam nut (Fig. 32) and close the hood.

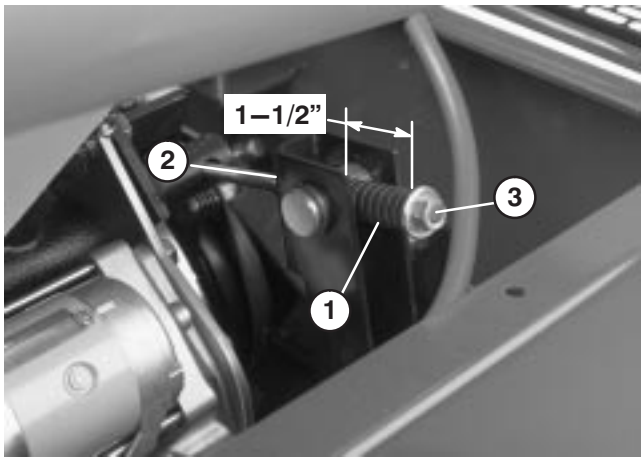

Figure 32
1. **Tensioning spring**
2. **Tensioning rod jam nut**
3. **Tension adjusting bolt**

PTO CLUTCH ADJUSTMENT

The power take off electric clutch can be adjusted by following the following procedure:

1. Turn engine off and remove the ignition key. Set the parking brake. Raise the engine hood and allow the engine to cool.

2. Remove bolt, washer and nut securing nylon block and remove nylon block (Fig. 33).

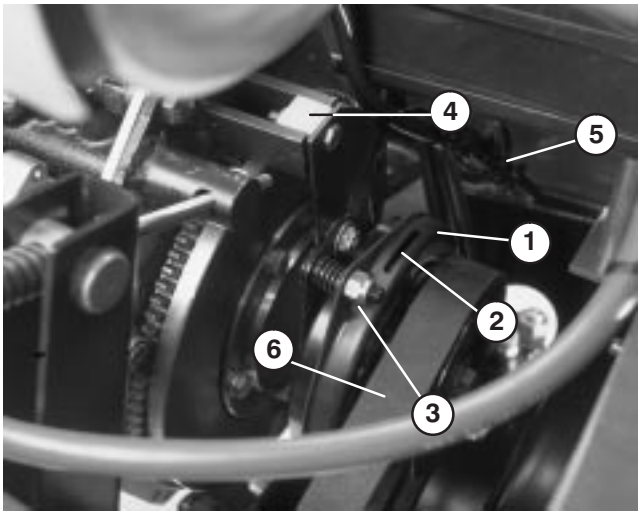

Figure 33

1. **Clutch**
2. **.015" air gap (3)**
3. **Adjusting nut (3)**
4. **Nylon block**
5. **Electrical connector**
6. **PTO belt**

3. Unplug clutch electric connector (Fig. 33).

4. Adjust the air gap so that a .015 inch feeler gauge slides in between the clutch lining and friction plate with light pressure (Fig. 33). The gap can be decreased by turning the adjusting nut clockwise (Fig. 32).

5. Rotate the clutch by hand and adjust all three air gaps. After all three gaps have been set, check all three again. Adjusting one gap can alter the other gaps.

6. Reinstall nylon block with nut, washer and bolt. Reconnect the clutch electrical connector.

CHANGING COOLANT IN COOLING SYSTEM

The cooling system must be filled with a 50/50 solution of water and permanent ethylene glycol anti-freeze. After every two years, drain the coolant from the radiator, reservoir expansion tank and engine by opening the drain cock and block plug. After coolant is drained, flush the entire system and refill it with a 50/50 solution of water and anti-freeze. Capacity of cooling system is approximately 7 quarts (6.4 l). When filling, fill the radiator completely and fill the expansion tank to between the marks. DO NOT OVERFILL. Always install radiator cap securely.

CAUTION

If engine has been running, pressurized hot coolant can escape when radiator cap is removed and cause burns.

ADJUSTING TRANSMISSION FOR NEUTRAL

The machine must not creep when traction pedal is released. If it does creep, an adjustment is required.

1. Park machine on a level surface and shut engine off. Depress only the right brake pedal and engage the parking brake.

2. Jack up left front side of machine until tire is off shop floor. Support machine with jack stands to prevent it from falling accidentally.

3. Lift seat. Visually inspect traction linkage for possible binding condition, correct if necessary and check machine operation. if condition still exists, repeat steps 1 and 2 and proceed to step 4.

4. Loosen (2) locknuts securing pump plate to mounting plate. This will allow plate to move freely (Fig. 34).

5. Start engine and rotate pump plate (Fig. 34) in either direction until wheel ceases rotation.

6. Stop engine and tighten locknuts to secure pump plate (Fig. 34).

7. Start engine and check adjustment. Repeat adjustment, if necessary.

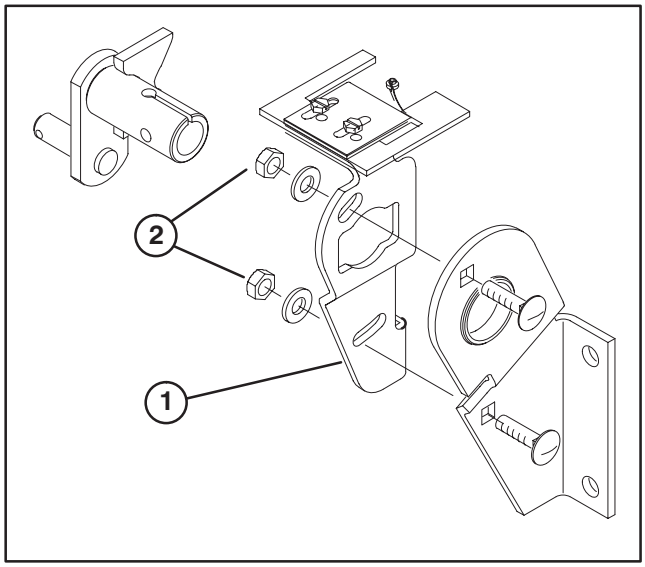

Figure 34

1. **Pump plate**
2. **Locknuts**

8. Stop the engine and release right brake. Remove jack stands and lower machine to the shop floor. Test drive the machine to be sure it does not creep.

CHANGING TRANSMISSION FILTER

Initially, replace the transmission filter after the first full day's operation — NOT TO EXCEED 10 HOURS. Replace the oil and filter every 200 hours thereafter.

The hydraulic system is designed to operate on any high quality detergent oil having the American Petroleum Institute — API — "service classification" SF/CC or CD. Oil viscosity — weight — must be selected according to anticipated ambient temperature for the season in which product will be used.

Temperature/viscosity recommendations are:

Expected Ambient Temperature	Recommended Viscosity and Type
(Extreme) over 90° F	SAE 30, Type SF/CC or CD engine oil.
(Normal) 40-100° F	SAE 10W-30 or 10W-40. Type SF/CC or CD engine oil.
(Cool—Spring/Fall) 30-50° F	SAE 5W-30, Type SF/CC or CD engine oil.
(Winter) Below 30° F	Type "F" or "FA" ATF Automatic Transmission Fluid.

Note: Do not mix engine oil and automatic transmission fluid or hydraulic component damage may result. When changing fluids, also change transmission filter. **DO NOT USE DEXRON II ATF.**

Note: Fluid to operate the power steering is supplied by the hydraulic system transmission charge pump.

Cold weather start–up may result in "stiff" operation of the steering until the hydraulic system has warmed up. Using proper weight hydraulic oil in system will minimize this condition.

The axle housing acts as the reservoir for the system. The transmission and axle housing are shipped from the factory with approximately 5 quarts (4.7 l) of SAE 10W-30 engine oil. However, check level of transmission oil before engine is first started and daily thereafter.

1. Lower cutting unit to shop floor, set parking brake, and turn engine OFF. Block the two rear wheels.

2. Jack up both sides of the front axle and support it with jack stands.

3. Clean the area around the hydraulic oil filter and remove the filter (Fig. 35).

4. Remove the tube that connects the axle housing to the transmission and allow the oil to flow into a drain pan.

5. Install new hydraulic oil filter and connect the tube between axle housing and transmission. Fill axle (reservoir) to proper level (approx. 5 qt); refer to Check Hydraulic System Fluid. Remove jack stands.

6. Start engine, cycle steering and lift cylinders, and check for oil leaks. allow engine to run for about five minute. Then shut engine off.

7. After two minutes, check level of transmission fluid; refer to Check Hydraulic System Fluid.

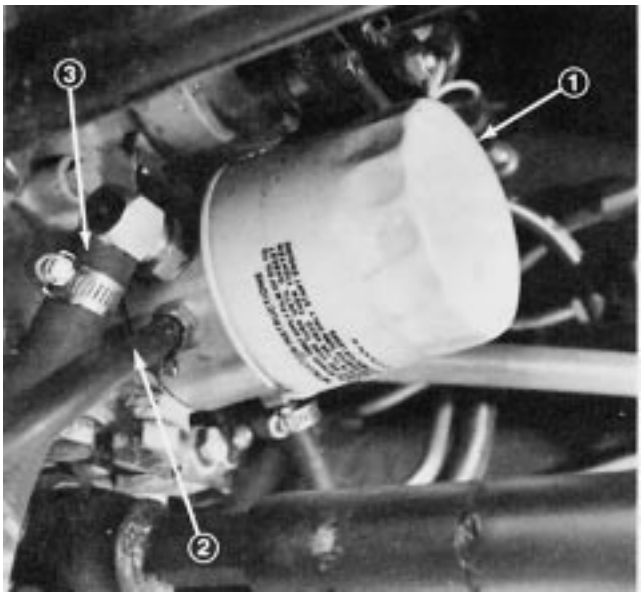

Figure 35

1. **Hydraulic system filter**
2. **Hydraulic return lines**
3. **Suction line**

ADJUSTING SERVICE BRAKES

Adjust the service brakes when there is more than one inch (25 mm) of "free travel" of the brake pedals, or when the brakes do not work effectively. Free travel is the distance the brake pedal moves before braking resistance is felt.

The brakes should be checked for adjustment after the first 50 hours of operation and should only need adjusting after considerable use thereafter. These periodic adjustments can be performed where the brake cable connect to the bottom of the brake pedals. When the cable is no longer adjustable, the star nut on inside of the brake drum must be adjusted to move the brake shoes outward. However, the brake cables must be adjusted again to compensate for this adjustment.

1. Disengage lock arm from right brake pedal so both pedals work independently of each other.

2. To reduce free travel of brake pedals — tighten the brakes — loosen front nut on threaded end of brake cable (Fig. 36). Then tighten rear nut to move cable backward until brake pedals have 1/2 to 1 inch (13 mm to 25 mm) of free travel. Tighten front nut after brakes are adjusted correctly.

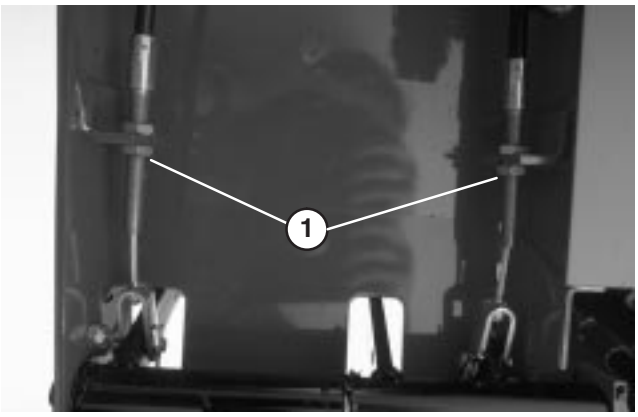

Figure 36

1. Jam nuts

SERVICING BATTERY

IMPORTANT: Before welding on the machine, disconnect ground cable from the battery to prevent damage to the electrical system.

Note: Check battery condition weekly or after every 50 hours of operation. Keep terminals and entire battery case clean because a dirty battery will slowly discharge. To clean the battery wash the entire case with solution of baking soda and water. Rinse with clear water. Coat the battery posts and cable connector with Grafo 112X (Skin-over) grease, Toro Part No. 505-47 or petroleum jelly to prevent corrosion.

WIRING HARNESS SERVICE

Prevent corrosion of wiring terminals by applying Grafo 112X (Skin-over) grease, Toro Part No. 505-47, to the inside of all harness connectors whenever the harness is replaced.

Whenever working with the electrical system, always disconnect battery cables, negative (–) cable first, to prevent possible wiring damage from short-outs.

FUSES

Fuses are accessible under seat plate (Fig. 37). All fuses are 10 amp.

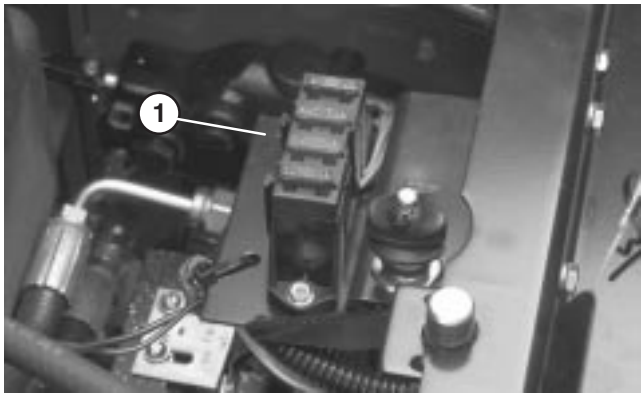

Figure 37

1. Fuses

ELECTRICAL SCHEMATIC

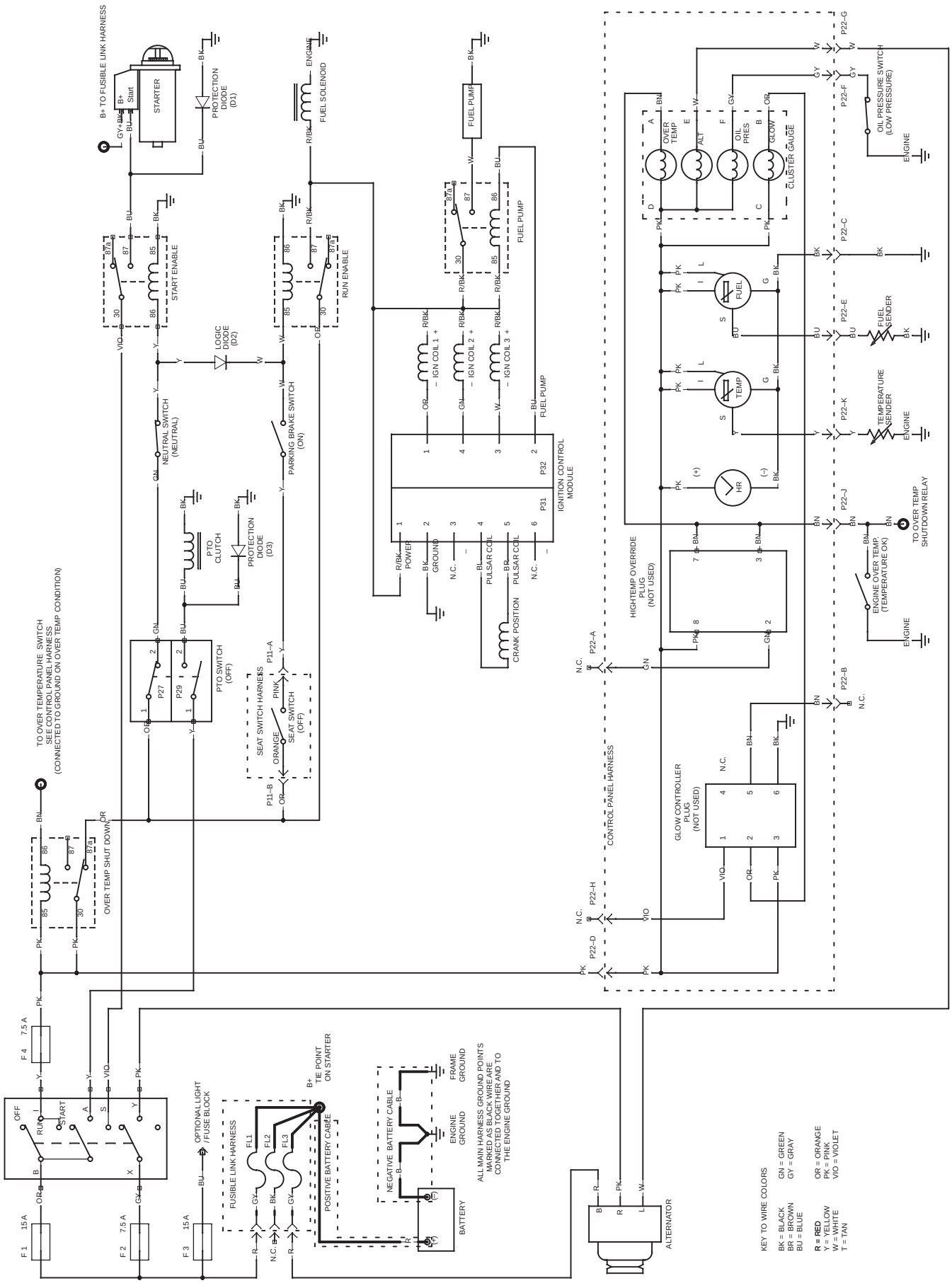

HYDRAULIC SCHEMATIC

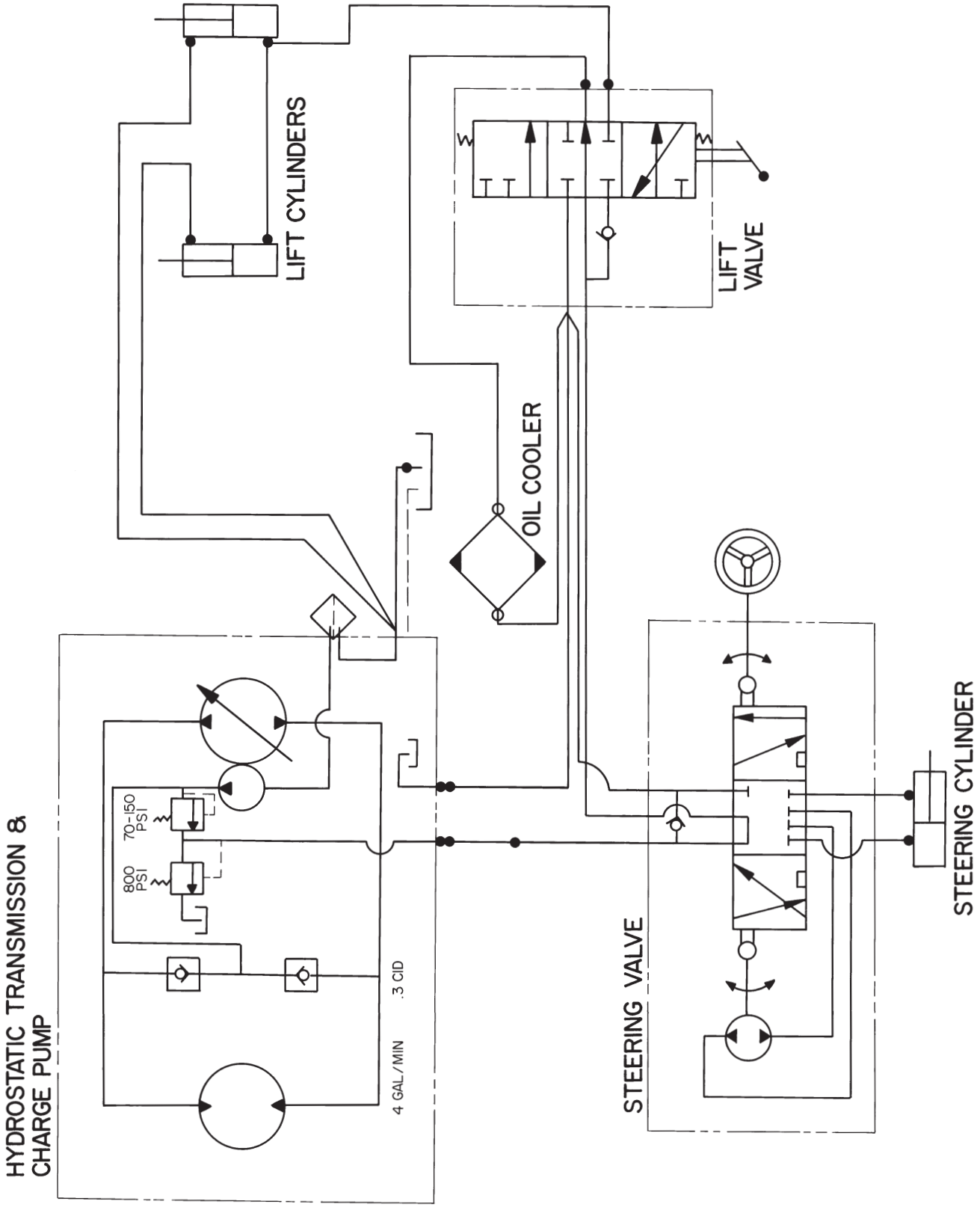

MAINTENANCE SCHEDULE

Minimum Recommended Maintenance Intervals

Maintenance Procedure	Every 50hrs	Every 100hrs	Every 200hrs	Every 400hrs
Check Battery Fluid Level				
Check Battery Cable Connections				
Lubricate All Grease Fittings				
Lubricate Brake Cables				
Check Cutting Unit Gear Box Oil Level				
Clean Under Cutting Unit Belt Covers				
Check Cutting Unit Drive Belt Adjustment				
‡ Change Engine Oil and Filter				
Inspect Air Filter, Dust Cup, and Baffle				
Check Electric Clutch Gap Adjustment				
† Check PTO Belt Tension				
† Check Alternator Belt Tension				
Inspect Cooling System Hoses				
‡ Change Engine Oil & Filter				
Service Air Filter				
Replace Fuel Filter				
Check Rear Wheel Toe–In and Steering Linkage				
† Change Transmission Filter				
† Torque Wheel Lug Nuts				
Drain and Clean Fuel Tank				
Replace Cutting Unit Gear Box Oil				
Change Electric Fuel Pump Filter				
Pack Rear Wheel Bearings				
Coat Transmission Bypass Pins with Grease				
‡ Torque Head, Adjust Valves and Check Engine RPM				

† Initial break in at 10 hours
‡ Initial break in at 50 hours

Replace Moving Hoses
Replace Safety Switches
Coolant System – Flush/Replace Fluid
Replace Hydraulic Oil

Annual Recommendations:
Items listed are recommended every 1000 hours or 2 years, whichever occurs first.

PREPARATION FOR SEASONAL STORAGE

Traction Unit

1. Thoroughly clean the traction unit, cutting unit and the engine, paying special attention to these areas:

   – radiator and radiator screen

   – underneath the cutting unit

   – under the cutting unit belt covers

   – counterbalance springs

   – P.T.O. Shaft Assembly

   – all grease fittings and pivot points

   – remove control panel and clean out inside of the control box

   – beneath seat plate and top of transmission

2. Check the tire pressure. Inflate all traction unit tires to 20 psi.

3. Remove, sharpen and balance the cutting unit's blades. Reinstall the blades and torque the blade fasteners to 85-110 ft-lb (115-149 N·m).

4. Check all fasteners for looseness; tighten as necessary.

5. Grease or oil all grease fittings, pivot points, and transmission by-pass valve pins. Wipe off any excess lubricant.

6. Lightly sand and use touch up paint on painted areas that are scratched, chipped or rusted. Repair any dents in the metal body.

7. Service the battery and cables as follows:

   a. Remove the battery terminals from the battery posts.

   b. Clean the battery, terminals and posts with a wire brush and baking soda solution.

   c. Coat the cable terminals and battery posts with Grafo 112X skin-over grease (Toro Part Number 505-47), or petroleum jelly to prevent corrosion.

   d. Slowly recharge the battery for 24 hours every 60 days to prevent lead sulfation of the battery.

Engine

1. Drain the engine oil from the oil pan and replace the drain plug.

2. Remove and discard the oil filter. Install a new filter.

3. Refill the engine with 3.2 quarts of recommended motor oil. Refer to Changing Engine Oil.

4. Start the engine and run at idle speed for two minutes.

5. Drain gasoline from the fuel tank, fuel lines, pump and filter. Flush fuel tank with clean solvent and connect all fuel lines.

6. Thoroughly clean and service the air cleaner assembly.

7. Seal the air cleaner inlet and the exhaust outlet with weather proof masking tape.

8. Check the oil filler cap and fuel tank cap to ensure they are securely in place.

PRODUCT IDENTIFICATION

The traction unit has two identification numbers: a model number and a serial number that are stamped into a plate. The identification plate is located near the left brake pedal on the frame (Fig. 38). In any correspondence concerning the traction unit, supply the model and serial numbers to ensure correct information and replacement parts are obtained.

To order replacement parts from an Authorized TORO Distributor supply the following information:

1. Model and serial numbers of the traction unit.

2. Part number, description and quantity of parts desired.

Note: Do not order by reference number if a parts catalog is being used; use the part number.

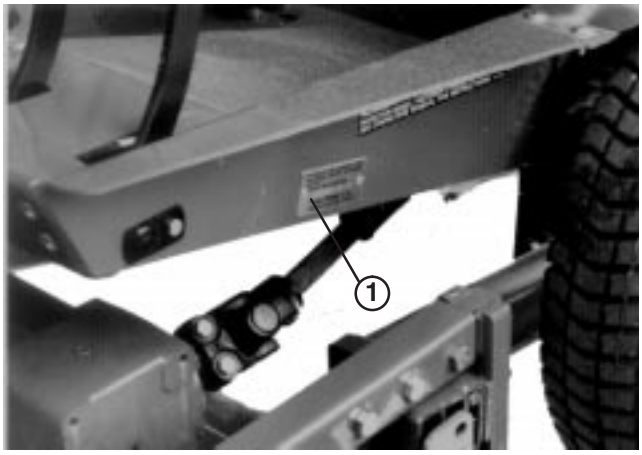

Figure 38

1. **Model and serial ID plate**

The Toro General Commercial Products Warranty

A Two-Year Limited Warranty

Conditions and Products Covered

The Toro Company and its affiliate, Toro Warranty Company, pursuant to an agreement between them, jointly warrant your 1996 or newer Toro Commercial Product ("Product") purchased after January 1, 1997, to be free from defects in materials or workmanship for two years or 1500 operational hours*, whichever occurs first. Where a warrantable condition exists, we will repair the Product at no cost to you including diagnosis, labor, parts, and transportation. This warranty begins on the date the Product is delivered to the original retail purchaser.

* Product equipped with hour meter

Instructions for Obtaining Warranty Service

You are responsible for notifying the Commercial Products Distributor or Authorized Commercial Products Dealer from whom you purchased the Product as soon as you believe a warrantable condition exists.

If you need help locating a Commercial Products Distributor or Authorized Dealer, or if you have questions regarding your warranty rights or responsibilities, you may contact us at:

Toro Commercial Products Service Department
Toro Warranty Company
8111 Lyndale Avenue South
Bloomington, MN 55420-1196
952-888-8801 or 800-982-2740
E-mail: commercial.service@toro.com

Owner Responsibilities

As the Product owner, you are responsible for required maintenance and adjustments stated in your operator's manual. Failure to perform required maintenance and adjustments can be grounds for disallowing a warranty claim.

Items and Conditions Not Covered

Not all product failures or malfunctions that occur during the warranty period are defects in materials or workmanship. This express warranty does not cover the following:

- Product failures which result from the use of non-Toro replacement parts, or from installation and use of add-on, modified, or unapproved accessories
- Product failures which result from failure to perform required maintenance and/or adjustments
- Product failures which result from operating the Product in an abusive, negligent or reckless manner
- Parts subject to consumption through use unless found to be defective. Examples of parts which are consumed, or used up, during normal Product operation include, but are not limited to, blades, reels, bedknives, tines, spark plugs, castor wheels, tires, filters, belts, etc.
- Failures caused by outside influence. Items considered to be outside influence include, but are not limited to, weather, storage practices, contamination, use of unapproved coolants, lubricants, additives, or chemicals, etc.
- Normal "wear and tear" items. Normal "wear and tear" includes, but is not limited to, damage to seats due to wear or abrasion, worn painted surfaces, scratched decals or windows, etc.

Parts

Parts scheduled for replacement as required maintenance are warranted for the period of time up to the scheduled replacement time for that part.

Parts replaced under this warranty become the property of Toro. Toro will make the final decision whether to repair any existing part or assembly or replace it. Toro may use factory remanufactured parts rather than new parts for some warranty repairs.

General Conditions

Repair by an Authorized Toro Distributor or Dealer is your sole remedy under this warranty.

Neither The Toro Company nor Toro Warranty Company is liable for indirect, incidental or consequential damages in connection with the use of the Toro Products covered by this warranty, including any cost or expense of providing substitute equipment or service during reasonable periods of malfunction or non-use pending completion of repairs under this warranty. Except for the Emissions warranty referenced below, if applicable, there is no other express warranty. All implied warranties of merchantability and fitness for use are limited to the duration of this express warranty.

Some states do not allow exclusions of incidental or consequential damages, or limitations on how long an implied warranty lasts, so the above exclusions and limitations may not apply to you.

This warranty gives you specific legal rights, and you may also have other rights which vary from state to state.

Note regarding engine warranty: The Emissions Control System on your Product may be covered by a separate warranty meeting requirements established by the U.S. Environmental Protection Agency (EPA) and/or the California Air Resources Board (CARB). The hour limitations set forth above do not apply to the Emissions Control System Warranty. Refer to the Engine Emission Control Warranty Statement printed in your operator's manual or contained in the engine manufacturer's documentation for details.

Countries Other than the United States or Canada

Customers who have purchased Toro products exported from the United States or Canada should contact their Toro Distributor (Dealer) to obtain guarantee policies for your country, province, or state. If for any reason you are dissatisfied with your Distributor's service or have difficulty obtaining guarantee information, contact the Toro importer. If all other remedies fail, you may contact us at Toro Warranty Company.

Part No. 374-0031 Rev. –