Form No. 3447-452 Rev B

TORO®

Count on it.

Parts Catalog

Flex-Force Power System™ 60V MAX 21in

Recycler® Lawn Mower with SmartStow®

Model No. 21357—Serial No. 400000000 and Up

Register at www.Toro.com.
Original Instructions (EN)

3447-452 B

Ordering Replacement Parts

To order replacement parts, please supply the part number, the quantity, and the description of each part desired.

Understanding Reference Numbers

Each identified part in an illustration has a reference number. The reference number for a part also appears in the parts list, along with other information about the part.

This catalog uses two special reference number formats, one to indicate parts in a service assembly and another to indicate the quantity of a given part in an illustration.

Service Assembly Reference Numbers

Parts in service assemblies have reference numbers in the form a:b. The a represents the reference number of the entire service assembly and the b represents a sequential number unique to each part within the service assembly.

For example, a wheel assembly might be identified by reference number 6, the tire by 6:1, the valve by 6:2, and the wheel by 6:3. When you order the assembly identified by reference number 6, you receive all parts identified by reference numbers 6:1,6:2, and 6:3. However, you may also order any part individually. Reference numbers of this type appear in illustration and in parts lists.

Reference Numbers Indicating Quantity

In an illustration, if a reference number indicates more than one part, the reference number has the form nX y. The n represents the quantity of the part, the X is the multiplication symbol, and the y represents the reference number.

For example, in an illustration, the reference number 2X 37 means that two of the parts identified by reference number 37 are indicated.

Contents

Housing and Chute Assembly 4
Frame and Bag Assembly 6
Motor Module and Blade Assembly 8
Motor Module Assembly No. 138-6660 Lower Shroud Assembly 10
Motor Module Assembly No. 138-6660 Hood and Upper Shroud Assembly 12
Front Wheel and Height-of-Cut Assembly 14
Rear Wheel and Height-of-Cut Assembly 16
Lower Handle Assembly 18
Upper Handle Assembly 20
Attachments and Accessories 22

© 2021—The Toro® Company
8111 Lyndale Avenue South
Bloomington, MN 55420

Contact us at www.Toro.com.
Printed in the USA.
All Rights Reserved

Housing and Chute Assembly

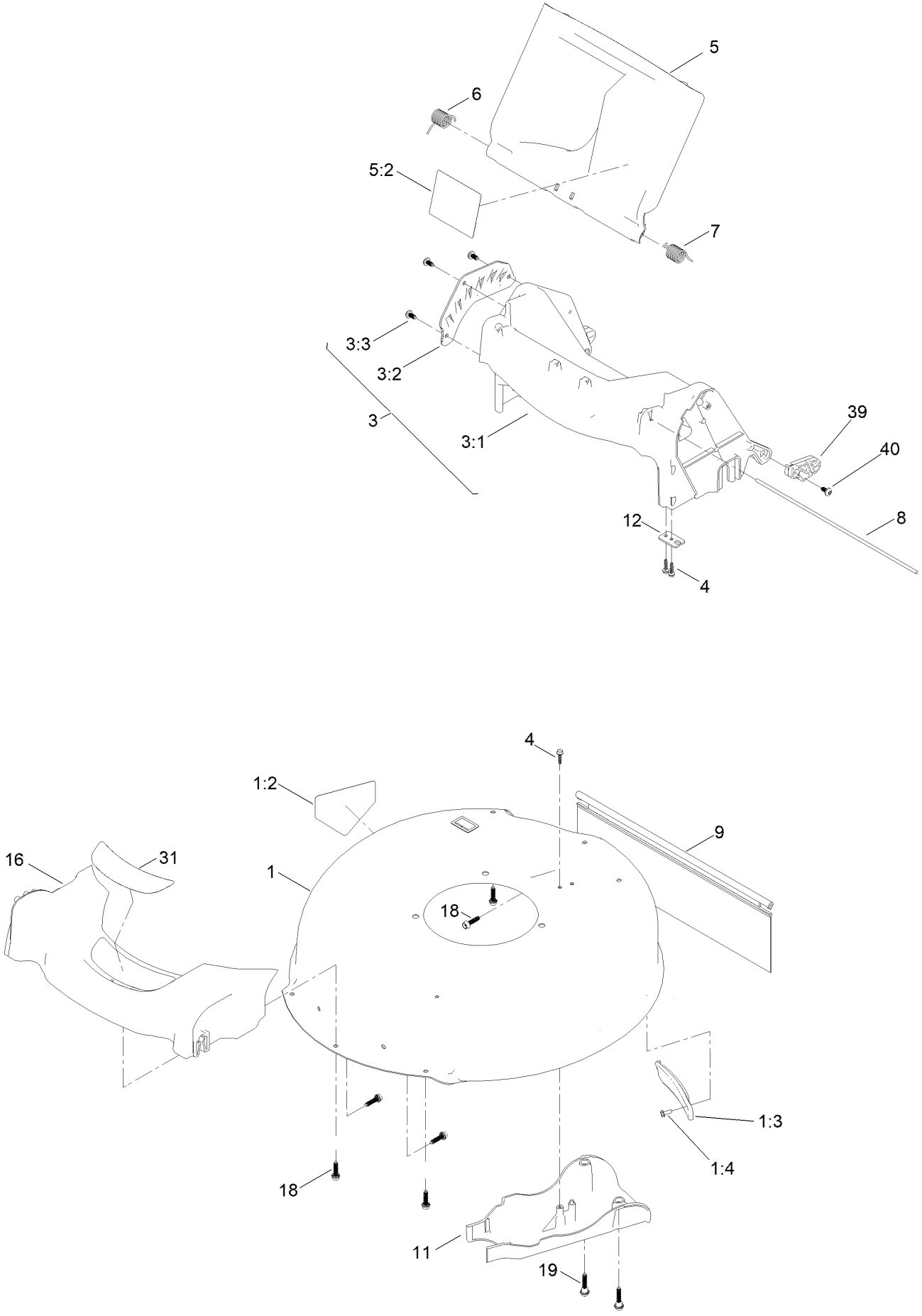

Housing and Chute Assembly (continued)

Ref.	Part Number	Qty.	Description
1	136-5906	1	Housing ASM
1:2	94-8072	1	Decal-Danger
1:3	132-4518	1	Cover-Belt
1:4	32144-1	1	Screw-Taptite
3	139-1805	1	Chute ASM
3:1	140-4160	1	Chute-Sp/Awd, 21 In
3:2	133-1905-03	1	Plate-HOC
3:3	139-1679	3	Screw-Plastic,PH
4	127-6831	3	Screw-HWH
5	140-3830	1	Rear Deflector ASM (60V)
5:2	140-3811	1	Decal-Wpm Warning, 60V
6	127-6807	1	Spring-Torsion
7	138-5378	1	Spring-Torsion
8	127-0698	1	Rod-Door
9	127-0724	1	Shield-Trailing
11	127-0723	1	Cover-Belt
12	127-0730	1	Bracket-Cable
16	127-0677	1	Bumper
18	130-6658	7	Screw-Flange, Plastic
19	131-0837	2	Screw-Shoulder, HHF
31	144-3198	1	Decal-Deck
39	140-4159	2	Pad-Stow, Smart
40	139-1679	2	Screw-Plastic,PH

Frame and Bag Assembly

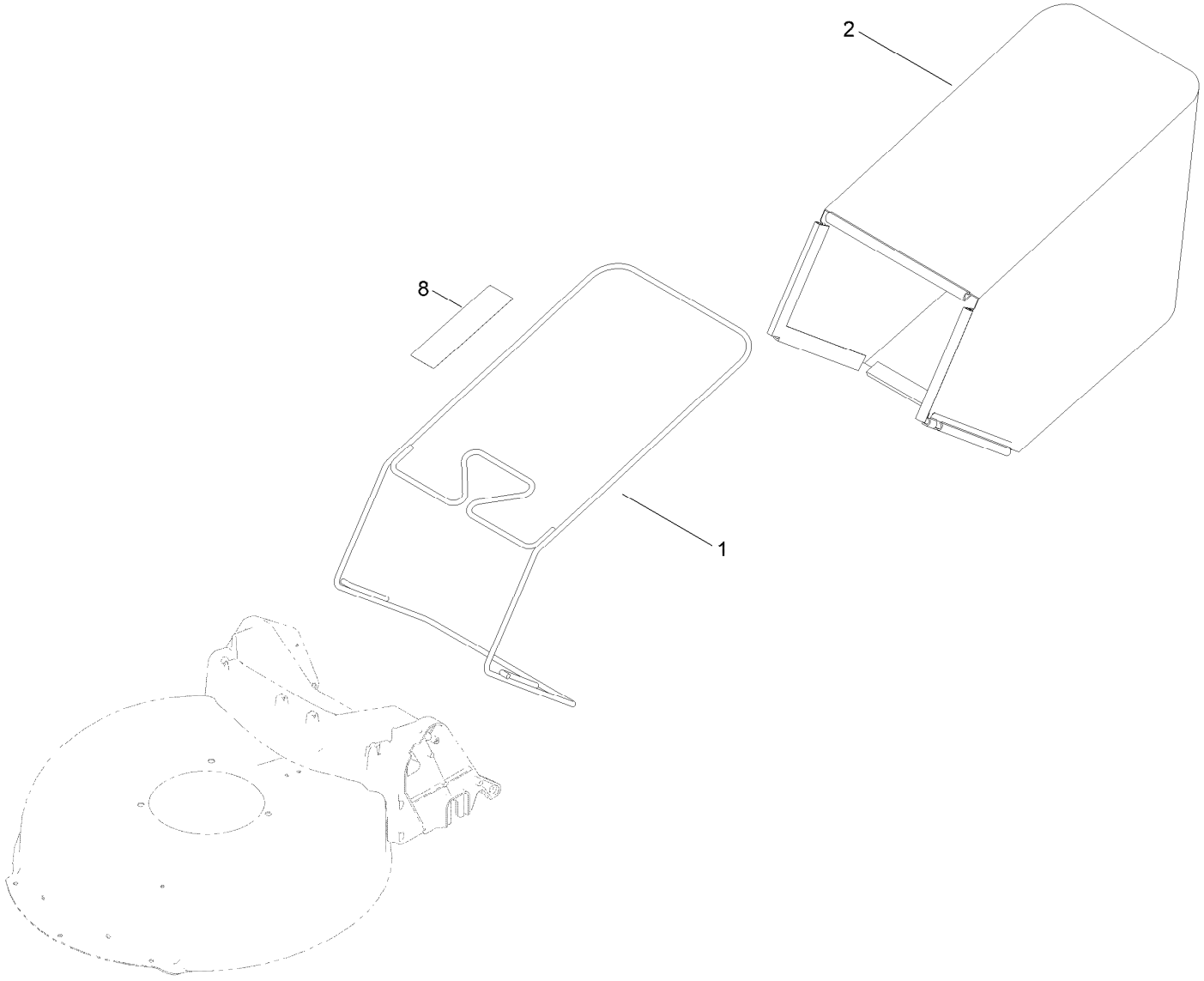

Frame and Bag Assembly (continued)

Ref.	*Part Number*	*Qty.*	*Description*
1	131-9697-03	1	Frame-Bag
2	140-3791	1	Grass Bag ASM
8	139-8986	1	Decal-Warning (Bag)

Motor Module and Blade Assembly

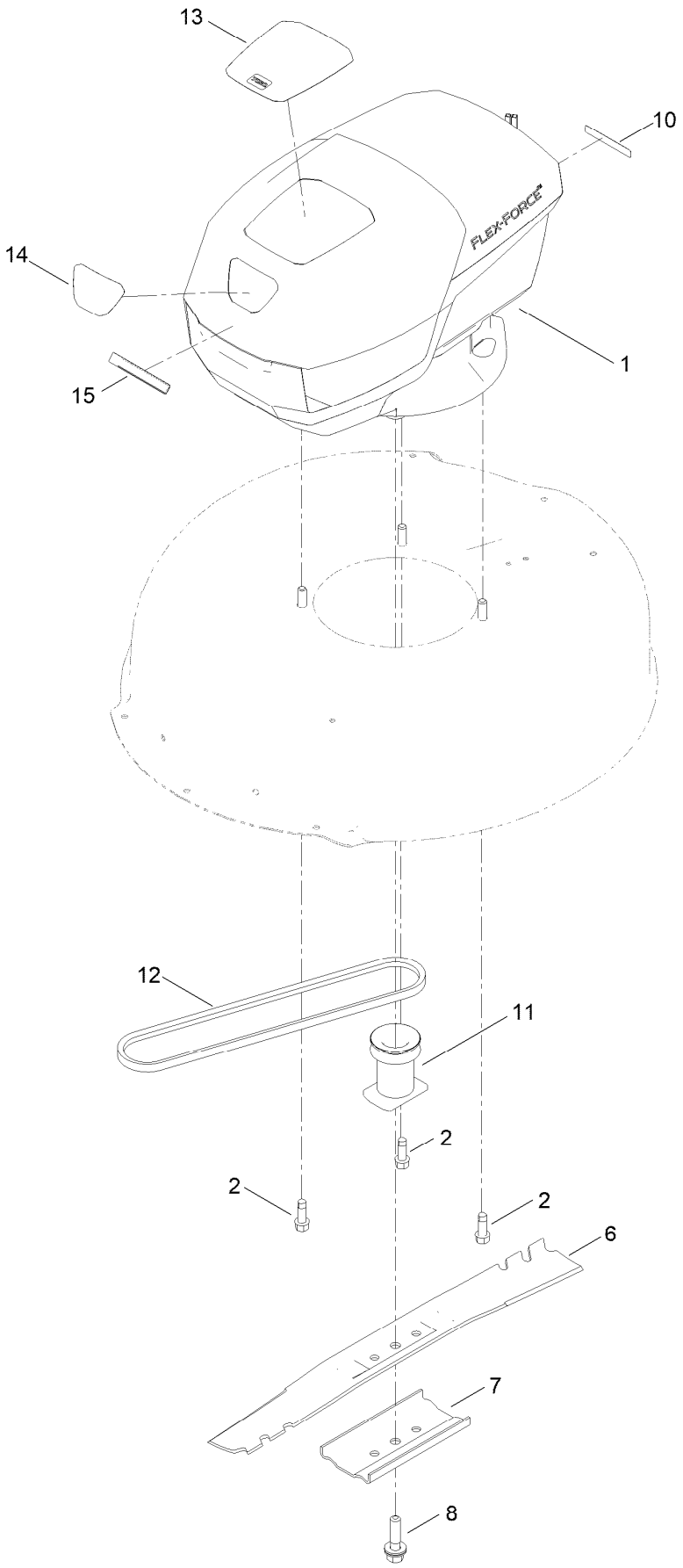

Motor Module and Blade Assembly (continued)

Ref.	Part Number	Qty.	Description
1	138-6660	1	Module-Motor
2	95-1726	3	Screw-Taptite
6	140-1274-03	1	Blade-21In (Mulch, Hs)
7	108-3766-03	1	Support-Blade
8	125-2466	1	Bolt-Blade
10	133-8061	1	Decal-Warning
11	139-1816	1	Driver-Blade
12	110-9429	1	V-Belt
13	140-4190	1	Decal
14	140-4191	1	Decal
15	144-3183	1	Decal

Motor Module Assembly No. 138-6660
Lower Shroud Assembly

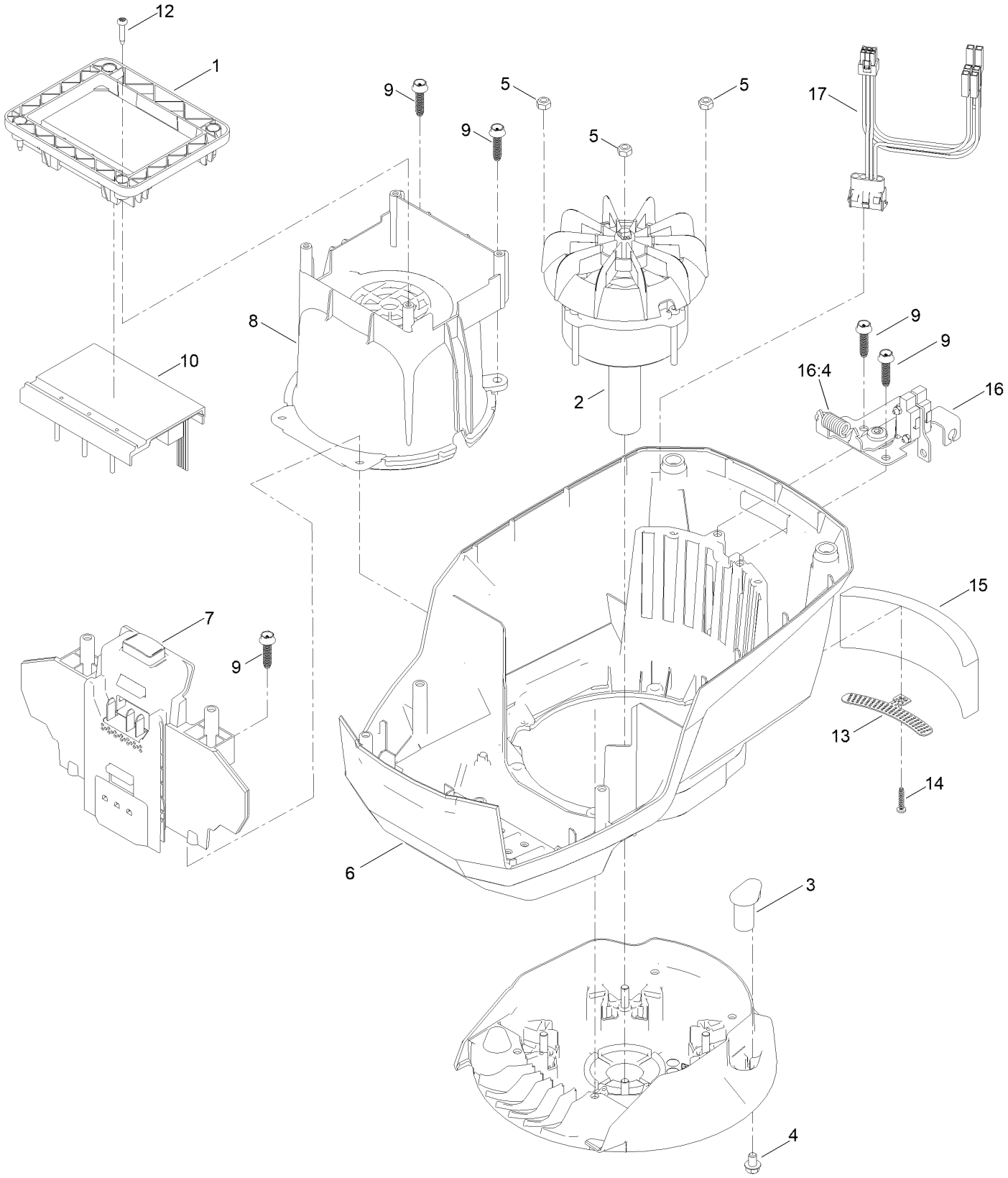

Motor Module Assembly No. 138-6660
Lower Shroud Assembly (continued)

Ref.	Part Number	Qty.	Description
1	139-6628	1	Base-Mount, Motor
2	138-6661	1	Motor, 60 Volt
3	131-9732	3	Insert-Mount, Motor
4	137-4795	3	Screw
5	115-7373	4	Nut-Lock
6	139-6631	1	Shroud-Lower
7	139-6632	1	Battery Reciever ASM
8	139-6633	1	Shroud-Motor
9	130-6658	6	Screw-Flange, Plastic
10	138-6662	1	Controller-Motor, 60 Volt
12	139-6642	4	Screw
13	139-6635	1	Bracket-Foam
14	138-3273	1	Screw-Plastic, PPH
15	139-6636	1	Foam
16	133-1918	1	Bail Switch ASM
16:4	104-6478	1	Spring-Extension
17	139-6637	1	Harness-Wire

Motor Module Assembly No. 138-6660
Hood and Upper Shroud Assembly

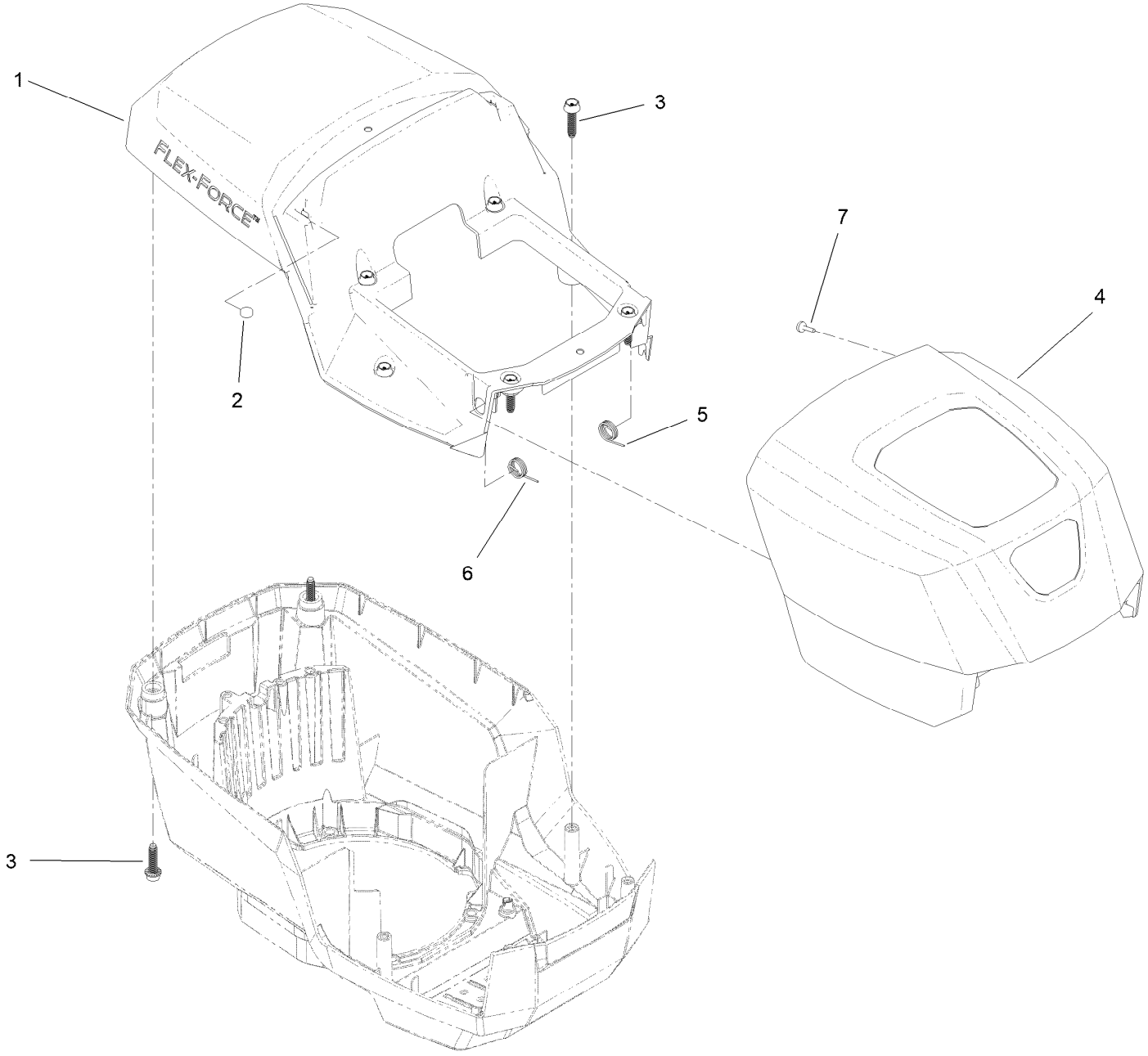

Motor Module Assembly No. 138-6660
Hood and Upper Shroud Assembly (continued)

Ref.	Part Number	Qty.	Description
1	139-6638	1	Shroud-Upper
2	114-5896	2	Magnet
3	130-6658	8	Screw-Flange, Plastic
4	139-6639	1	Hood
5	139-6640	1	Spring-LH
6	139-6641	1	Spring-RH
7	95-4234	2	Screw-PPH

Front Wheel and Height-of-Cut Assembly

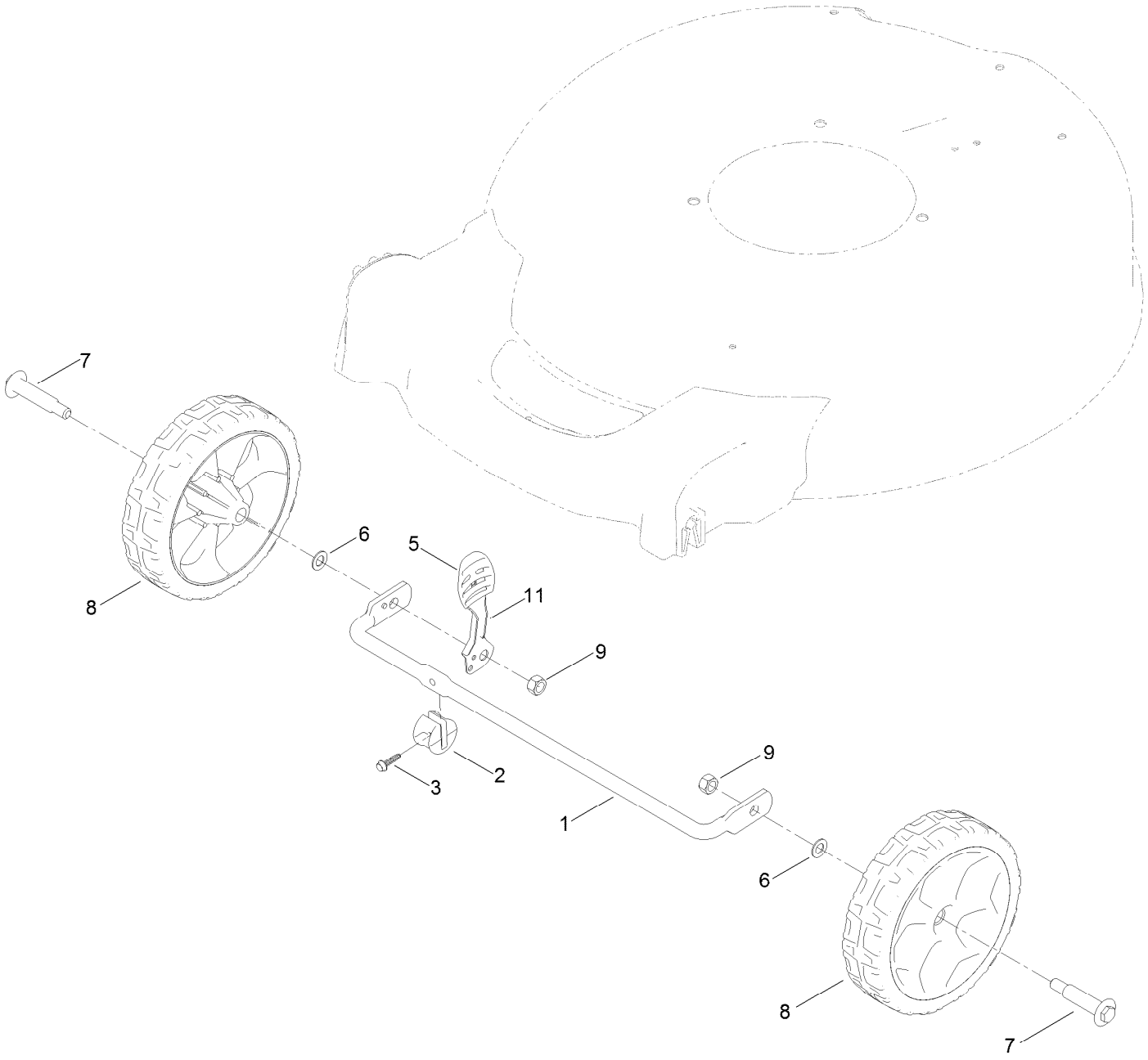

Front Wheel and Height-of-Cut Assembly (continued)

Ref.	Part Number	Qty.	Description
1	127-0668-03	1	Axle-Front
2	127-6800	1	Stop-Axle
3	127-6831	1	Screw-HWH
5	105-3042	1	Knob-Lever, HOC
6	40-1940	2	Washer
7	92-1057	2	Bolt-Shoulder
8	127-0683	2	7 Inch Wheel ASM
9	603773	2	Locknut
11	133-8154	1	Arm-Spring

Rear Wheel and Height-of-Cut Assembly

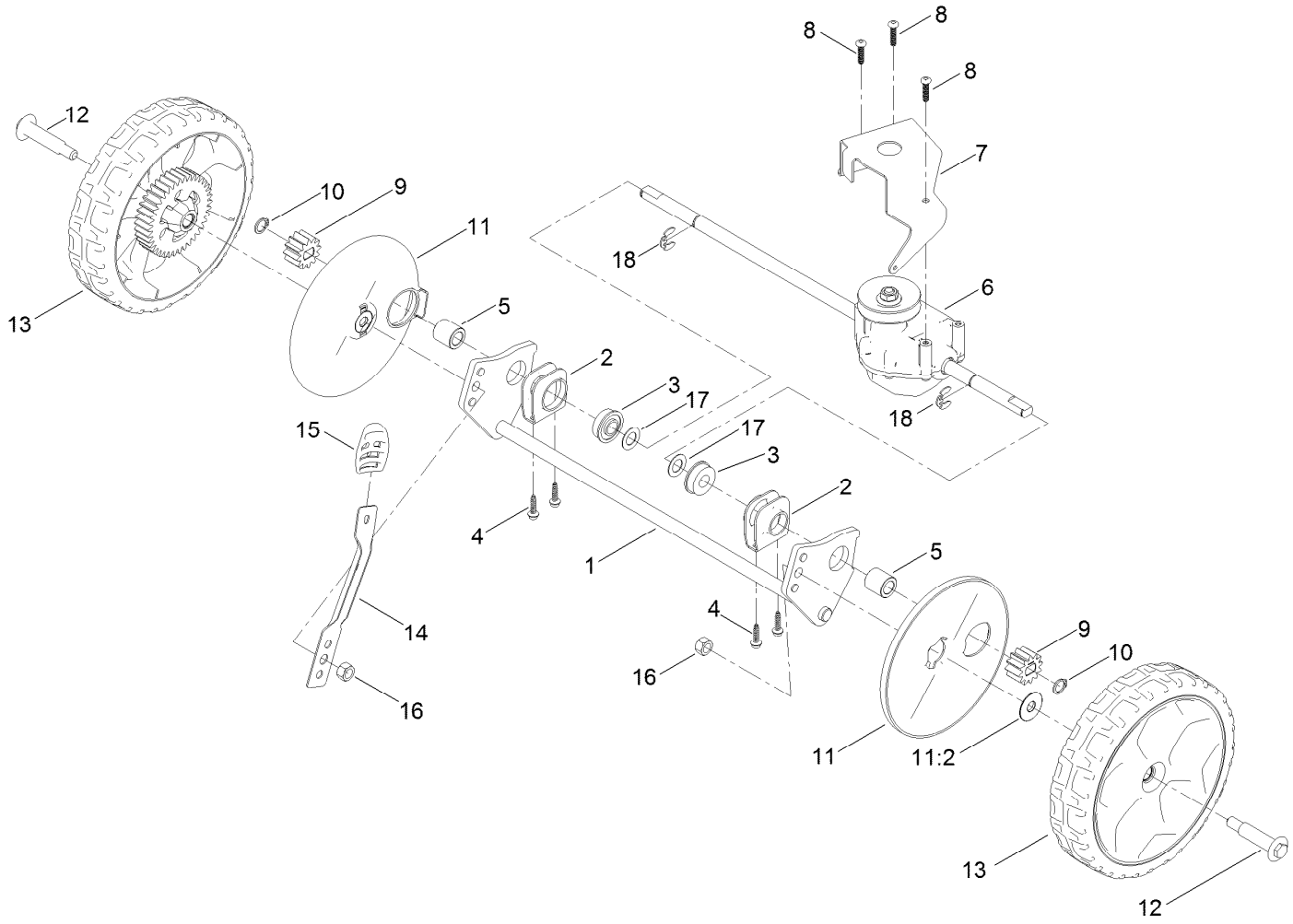

Rear Wheel and Height-of-Cut Assembly (continued)

Ref.	Part Number	Qty.	Description
1	127-0708-03	1	Axle-Rear
2	138-3234	2	Retainer-Bearing
3	104-8699	2	Bearing-Ball
4	127-6831	4	Screw-HWH
5	127-6896	2	Bushing-Sleeve
6	131-0881	1	Transmission
7	114-7977-03	1	Bracket-Transmission
8	108-7476	3	Screw-Plastite
9	115-4668	2	Gear-Pinion
10	32151-61	2	Ring-Retaining
11	127-6840	2	Wheel Cover ASM
11:2	614426	1	Washer-Stepped
12	92-1057	2	Bolt-Shoulder
13	127-0692	2	8 Inch Wheel Gear ASM
14	145-3857	1	Arm-Spring
15	105-3042	1	Knob-Lever, HOC
16	603773	2	Locknut
17	36-4780	2	Washer-Plain
18	65-2720	2	Ring-Retaining, Clip

Lower Handle Assembly

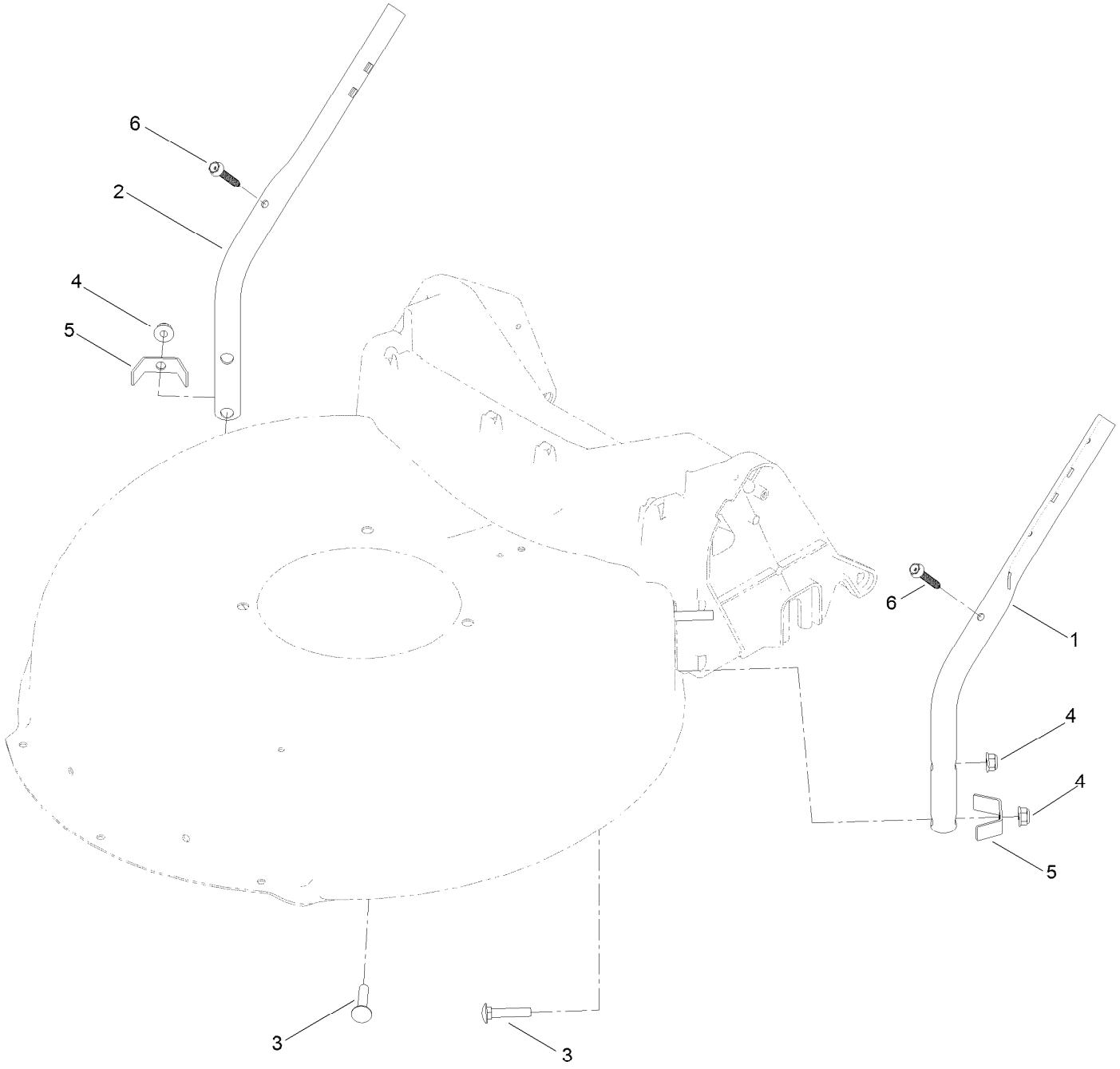

Lower Handle Assembly (continued)

Ref.	Part Number	Qty.	Description
1	136-5923-05	1	Handle-Lower, LH
2	136-5924-05	1	Handle-Lower, RH
3	130-6654	4	Bolt-CARR
4	130-6655	4	Nut-Flange, NI
5	127-0699	2	Bracket-Chute
6	130-6659	2	Screw-Flange, Serrated

Upper Handle Assembly

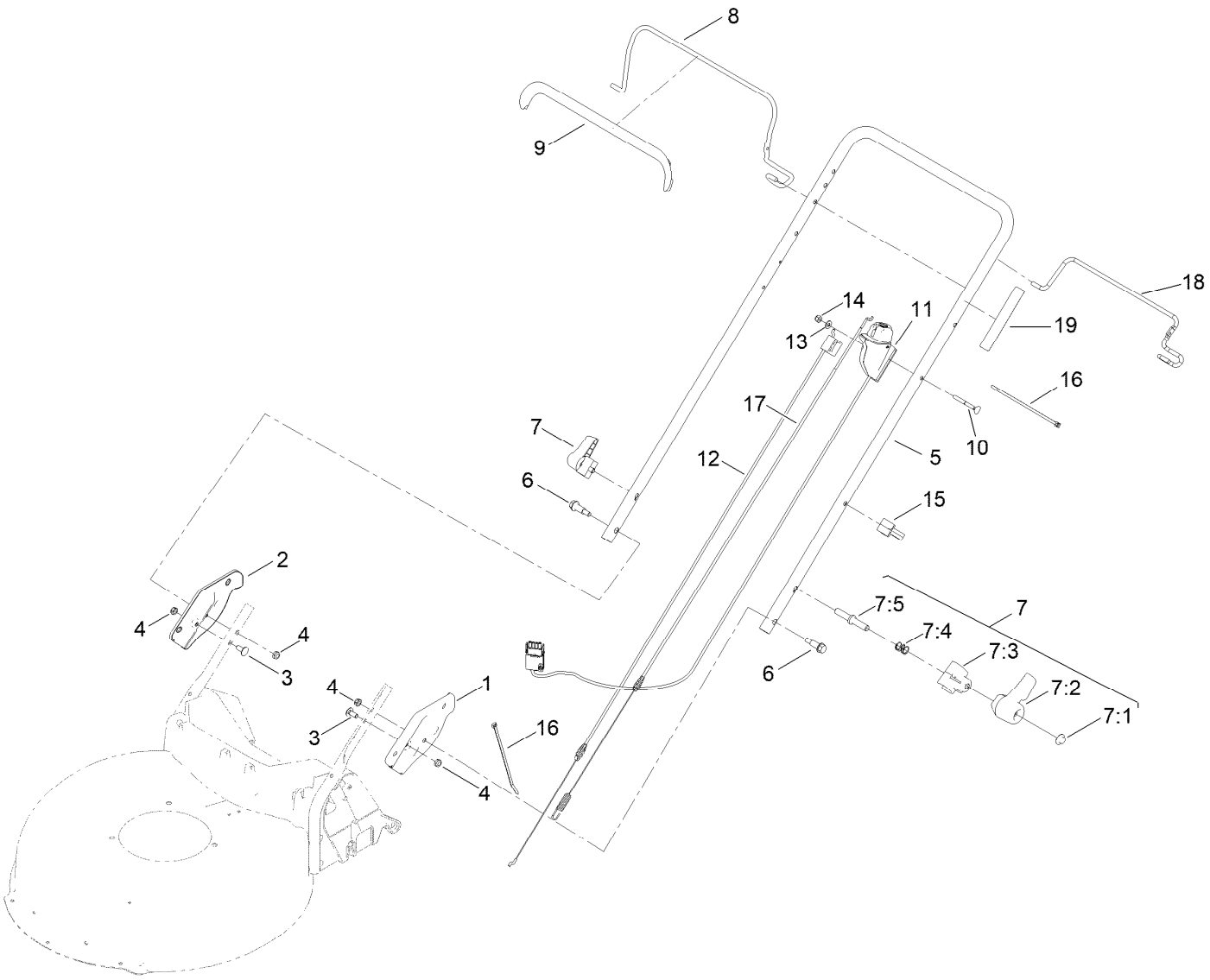

Upper Handle Assembly (continued)

Ref.	Part Number	Qty.	Description
1	140-3973-05	1	Plate-Handle, LH
2	140-3974-05	1	Plate-Handle, RH
3	137-3061	2	Bolt-CARR
4	137-3089	4	Nut-Hex
5	131-4569-05	1	Handle
6	140-3759	2	Bolt-Shoulder,HHF
7	138-3249	2	Quick Release ASM
7:1	140-4157	1	Nut-Push
7:2	138-3248	1	Lever-Release
7:3	138-3253	1	Anchor-Spring
7:4	115-2858	1	Spring-Compression
7:5	140-4158	1	Rod-Release
8	138-3269-03	1	Bail-Brake
9	127-6847	1	Cover-Bail
10	92-2270	1	Screw-Handle
11	133-8140	1	Starter Switch ASM
12	137-9169	1	Cable-Brake, HP
13	3256-1	1	Washer-Flat
14	3296-73	1	Nut-Lock, NI
15	114-7988	1	Guide-Cable
16	614249	2	Tie-Cable
17	127-0733	1	Cable-Traction
18	131-0835-03	1	Bail-Traction
19	144-3175	1	Decal-Controls (60V Start)

Attachments and Accessories

For 21357 Flex-Force Power System 60V MAX 21in Recycler Lawn Mower with SmartStow

Product Name	Model/Part
Side-Discharge Deflector, 2013 and After 21in Steel Deck Mower	136-7060
Lawn Striping Kit with 22in Roller	20601
Bag-Walk Behind (Toro)	490-7318
Lawnmower Cover	490-7462
60V Cordless Blower (Bare Tool)	51820T
60V Cordless Trimmer (Bare Tool)	51830T
60V Battery Charger 2 AMP	88602
60V LI-ION, Battery 4.0 AH	88640
60V LI-ION BATTERY 5.0AH	88650
60V LI-ION Battery 6.0 AH	88660
60V LI-ION Battery 7.5 AH	88675

Notes:



Count on it.