Form No. 3449-233 Rev A

TORO®

Count on it.

Operator's Manual

12in Cordless Single-Line Trimmer

Model No. 51484—Serial No. 321013101 and Up
Model No. 51484T—Serial No. 321000001 and Up

Register at www.Toro.com.
Original Instructions (EN)

3449-233

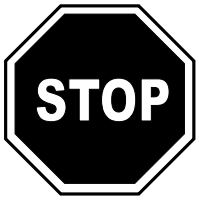

For assistance, please see www.Toro.com/support for instructional videos or contact 1-888-384-9939 before returning this product.

⚠ WARNING

CALIFORNIA
Proposition 65 Warning

The power cord on this product contains lead, a chemical known to the State of California to cause birth defects or other reproductive harm. Wash hands after handling.

Use of this product may cause exposure to chemicals known to the State of California to cause cancer, birth defects, or other reproductive harm.

Introduction

This trimmer is intended to be used by residential homeowners to trim grass as needed outdoors. It is designed to use Toro lithium-ion battery pack Model 88502 (provided with Model 51484). This battery pack is designed to be charged only by battery charger Model 88500. Using this product for purposes other than its intended use could prove dangerous to you and bystanders.

Read this information carefully to learn how to operate and maintain your product properly and to avoid injury and product damage. You are responsible for operating the product properly and safely.

Visit www.Toro.com for product safety and operation training materials, accessory information, help finding a dealer, or to register your product.

Model 51484T does not include a battery or a charger.

Safety

WARNING—When using electric gardening appliances, basic safety precautions should always be followed to reduce the risk of fire, electric shock, and personal injury, including the following:

READ ALL INSTRUCTIONS

I. Training

1. The operator of the appliance is responsible for any accidents or hazards occurring to others or their property.
2. Do not allow children to use or play with the appliance, battery pack, or the battery charger; local regulations may restrict the age of the operator.
3. Do not allow children or untrained people to operate or service this device. Allow only people who are responsible, trained, familiar with the instructions, and physically capable to operate or service the device.
4. Before using the appliance, battery pack, and battery charger, read all the instructions and cautionary markings on these products.
5. Become familiar with the controls and proper use of the appliance, battery pack, and battery charger.

II. Preparation

1. Keep bystanders and children away from the operating area.
2. Use only the battery pack specified by Toro. Using other accessories and attachments may increase the risk of injury and fire.
3. Plugging the battery charger into an outlet that is not 120 V can cause a fire or electric shock. Do not plug the battery charger into an outlet other than 120 V. For a different style of connection, use an attachment plug adapter of the proper configuration for the power outlet if needed.
4. Do not use a damaged or modified battery pack or battery charger, which may exhibit unpredictable behavior that results in fire, explosion, or risk of injury.
5. If the supply cord to the battery charger is damaged, contact an Authorized Service Dealer to replace it.
6. Do not use non-rechargeable batteries.
7. Charge the battery pack with only the battery charger specified by Toro. A charger suitable for 1 type of battery pack may create a risk of fire when used with another battery pack.

© 2021—The Toro® Company
8111 Lyndale Avenue South
Bloomington, MN 55420

Contact us at www.Toro.com.
Printed in China
All Rights Reserved

8. Charge the battery pack in a well-ventilated area only.
9. Do not expose a battery pack or battery charger to fire or to temperatures higher than 100°C (212°F).
10. Follow all charging instructions and do not charge the battery pack outside of the temperature range specified in the instructions. Otherwise, you may damage the battery pack and increase the risk of fire.
11. Do not operate the appliance without all guards and other safety protective devices in place and functioning properly on the appliance.
12. Dress properly—Wear appropriate clothing, including eye protection; long pants; substantial, slip-resistant footwear; rubber gloves; and hearing protection. Tie back long hair and do not wear loose jewelry that can get caught in moving parts. Wear a dust mask in dusty operating conditions.

III. Operation

1. Avoid dangerous environments—Do not use the appliance in rain or in damp or wet locations.
2. Use the proper appliance for your application—Using the appliance for purposes other an its intended use could prove dangerous to you and bystanders.
3. Prevent unintentional starting—Ensure that the switch is in the OFF position before connecting to the battery pack and handling the appliance. Do not carry the appliance with your finger on the switch or energize the appliance with the switch in the ON position.
4. Operate the appliance only in daylight or good artificial light.
5. Remove the battery pack from the appliance before adjusting it or changing accessories.
6. Keep your hands and feet away from the cutting area and all moving parts.
7. Stop the appliance, remove the battery pack from the appliance, and wait for all movement to stop before adjusting, servicing, cleaning, or storing the appliance.
8. Remove the battery pack from the appliance whenever you leave it unattended.
9. Do not force the appliance—Allow the appliance to do the job better and safer at the rate for which it was designed.
10. Do not overreach—Keep proper footing and balance at all times, especially on slopes. Walk, never run with the appliance.
11. Stay alert—Watch what you are doing and use common sense when operating the appliance. Do not use the appliance while ill, tired, or under the influence of alcohol or drugs.
12. Ensure that the ventilation openings are kept clear of debris.
13. Under abusive conditions, the battery pack may eject liquid; avoid contact. If you accidently come into contact with the liquid, flush with water. If the liquid contacts your eyes, seek medical help. Liquid ejected from the battery pack may cause irritation or burns.
14. CAUTION—A mistreated battery pack may present a risk of fire, explosion, or chemical burn. Do not disassemble the battery pack. Do not heat the battery pack above 68°C (154°F) or incinerate it. Replace the battery pack with a genuine Toro battery pack only; using another type of battery pack may cause a fire or risk of injury. Keep battery packs out of the reach of children and in the original packaging until you are ready to use them.

IV. Maintenance and Storage

1. Maintain the appliance with care—Keep it clean and in good repair for best performance and to reduce the risk of injury. Follow the instructions for lubricating and changing accessories. Keep handles dry, clean, and free from oil and grease.
2. When the battery pack is not in use, keep it away from metal objects such as paper clips, coins, keys, nails, and screws that can make a connection from 1 terminal to another. Shorting the battery terminals may cause burns or a fire.
3. Keep your hands and feet away from moving parts.
4. Stop the appliance, remove the battery pack from the appliance, and wait for all movement to stop before adjusting, servicing, cleaning, or storing the appliance.
5. Check the appliance for damaged parts—If there are damaged guards or other parts, determine whether it will operate properly. Check for misaligned and binding moving parts, broken parts, mounting, and any other condition that may affect its operation. Unless indicated in the instructions, have an Authorized Service Dealer repair or replace a damaged guard or part.
6. Do not replace the existing non-metallic cutting means on the appliance with a metallic cutting means.
7. Do not attempt to service or repair the appliance, battery pack, or battery charger except as indicated in the instructions. Have an Authorized Service Dealer perform service using identical replacement parts to ensure that the product is safely maintained.

8. Store an idle appliance indoors in a place that is dry, secure, and out of the reach of children.
9. Do not dispose of the battery in a fire. The cell may explode. Check with local codes for possible special disposal instructions.

SAVE THESE INSTRUCTIONS

Safety and Instructional Decals

Safety decals and instructions are easily visible to the operator and are located near any area of potential danger. Replace any decal that is damaged or missing.

Symbol	Name	Designation/Explanation
DC	Direct current	Type of current
V	Volts	Voltage

Model 51484

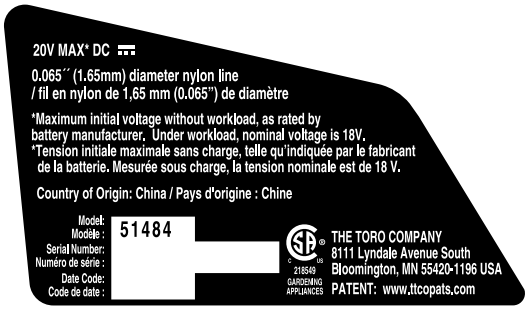

decal145-3139

145-3139

Model 51484T

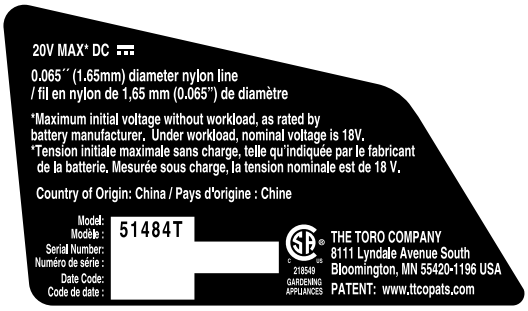

decal145-3146

145-3146



decal139-5210

139-5210

1. Warning—read the *Operator's Manual*; stay away from moving parts; keep all guards in place; wear eye protection; do not operate in wet conditions.



decal145-3138

145-3138



decal121-7691

121-7691



decal125-3279

125-3279



decal125-3295

125-3295

Setup

Loose Parts

Use the chart below to verify that all parts have been shipped.

Procedure	Description	Qty.	Use
1	Auxiliary handle Latch Brace	1 1 1	Installing auxiliary handle.
2	Guard Phillips screw	1 1	Mounting the guard to the base of the trimmer.
3	Wire edge guard	1	Installing the edge guard
4	No parts required	–	Adjust the auxiliary handle, trimmer height, and base position.

1

Installing the Auxiliary Handle

Parts needed for this procedure:

1	Auxiliary handle
1	Latch
1	Brace

1. Position the auxiliary handle on the shaft of the trimmer with the smooth surface facing you (Figure 1).

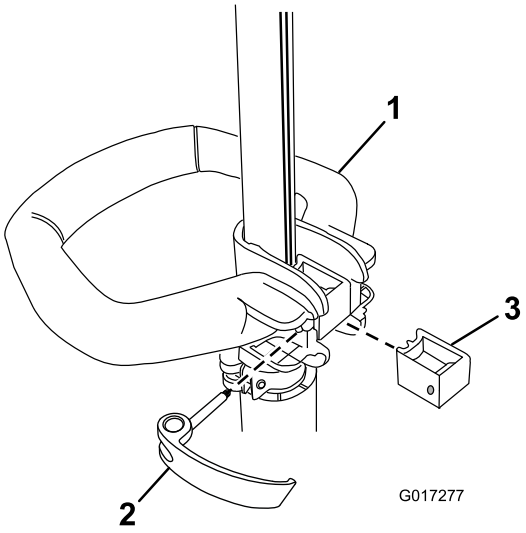

g017277

Figure 1

1. Auxiliary handle
2. Latch
3. Brace

2. Slide the brace into the auxiliary handle so that the brace rests in the groove along the shaft (Figure 1).
3. Slide the latch from the left through the handle and brace as shown and tighten the latch screw with a Phillips head screwdriver (Figure 1).

2

Installing the Guard

Parts needed for this procedure:

1	Guard
1	Phillips screw

Procedure

1. Remove the Phillips screw that is taped to the guard (Figure 2).
2. Slide the guard onto the trimmer base as shown in Figure 2.

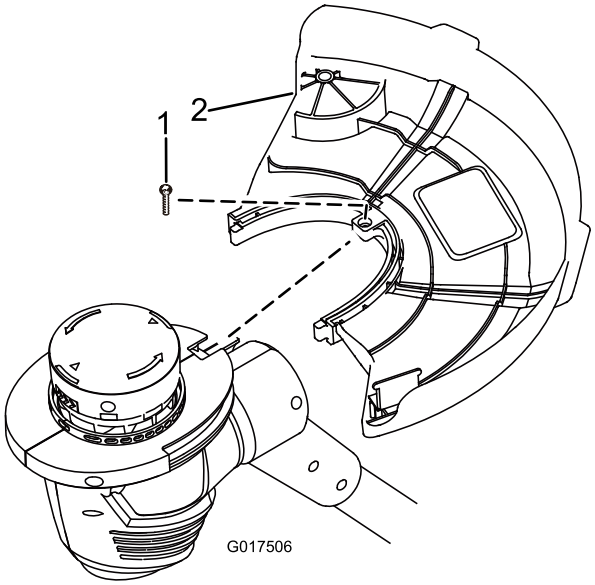

Figure 2

1. Phillips screw
2. Guard

3. Secure the guard using a Phillips screw.

3

Installing the Edge Guard

Parts needed for this procedure:

1	Wire edge guard

Procedure

Insert the ends of the wire edge guard into the holes in the trimmer housing as shown in Figure 3.

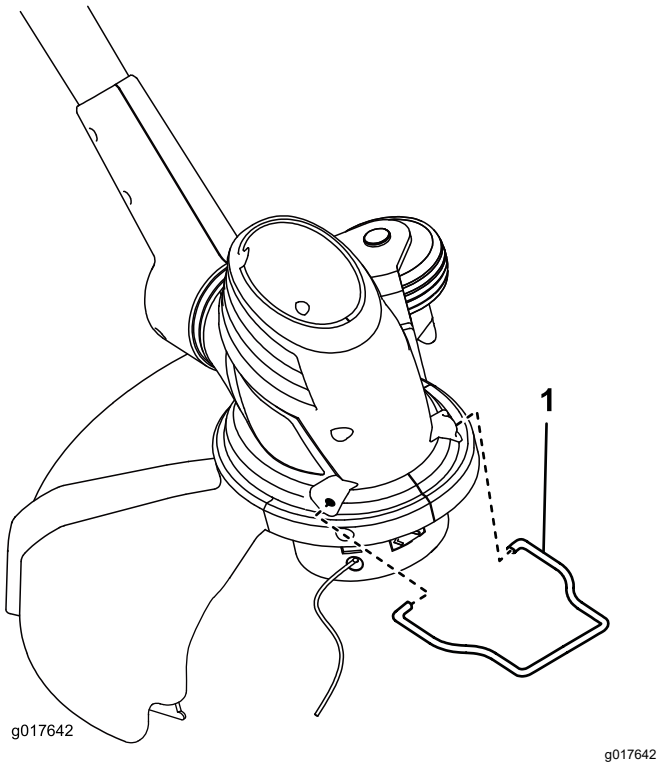

Figure 3

1. Wire edge guard

4

Adjusting the Auxiliary Handle, Trimmer Height, and Base Position

No Parts Required

Procedure

- To adjust the auxiliary handle height, release the auxiliary handle latch, slide the auxiliary handle up or down to the desired height, then secure the auxiliary handle in place by closing the auxiliary latch (Figure 4).

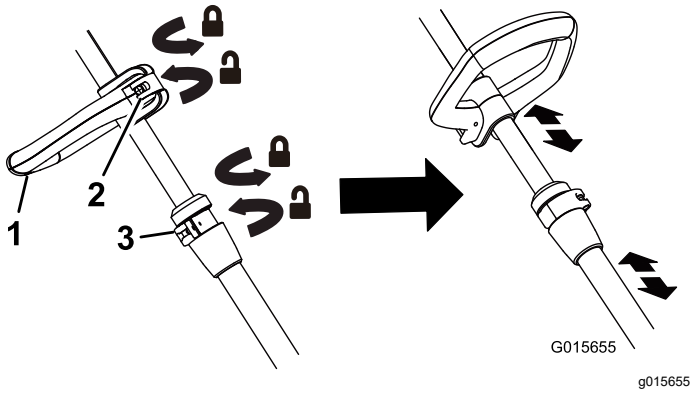

Figure 4

1. Auxiliary handle
2. Auxiliary handle latch
3. Height adjustment latch

- To adjust the trimmer height, open the height adjustment latch, then slide the shaft up or down to desired height, securing it in place with the latch (Figure 4).
- To adjust the position of the base, press down on the rotator button located at the base of the shaft, then move the base to face the desired direction (Figure 5).

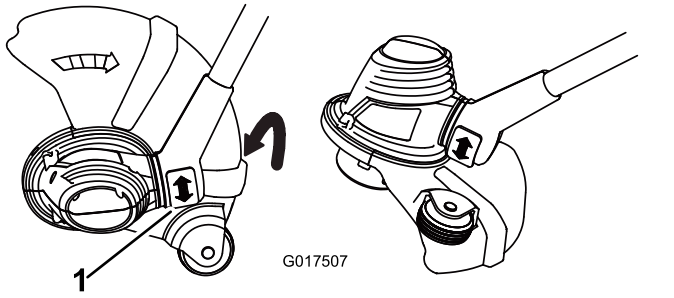

Figure 5

1. Rotator button

Operation

Important: **The battery pack is not fully charged when it is purchased. Before using the trimmer for the first time, place the battery pack in the charger and charge until the LED indicators turn green. Make sure to read all safety precautions. With regular use, it will need shorter charging time. If storing for a prolonged period of time, remove the battery pack. When ready to use again, charge the battery pack until the LED indicators turn green.**

Starting the Trimmer

1. Align the tongue of the battery pack with the cavity in the handle housing (Figure 6).

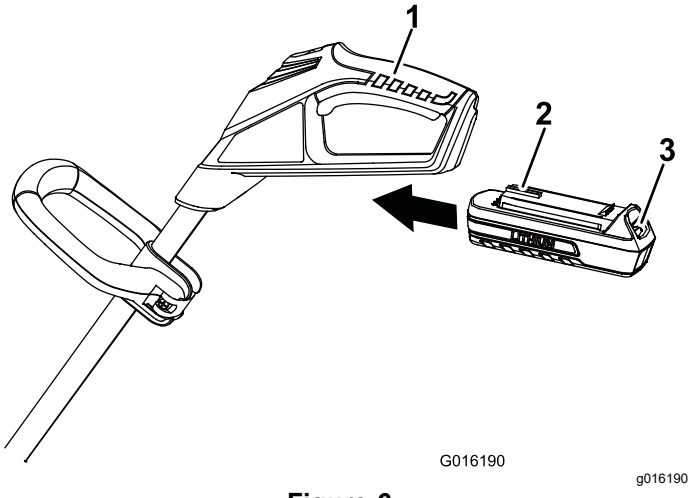

Figure 6

1. Trigger handle
2. Tongue
3. Latch

2. Grasp the trigger handle (Figure 6).
3. Push the battery pack into the handle until the latch locks into place.
4. To start the trimmer, slide the lock switch back, then squeeze the trigger (Figure 7).

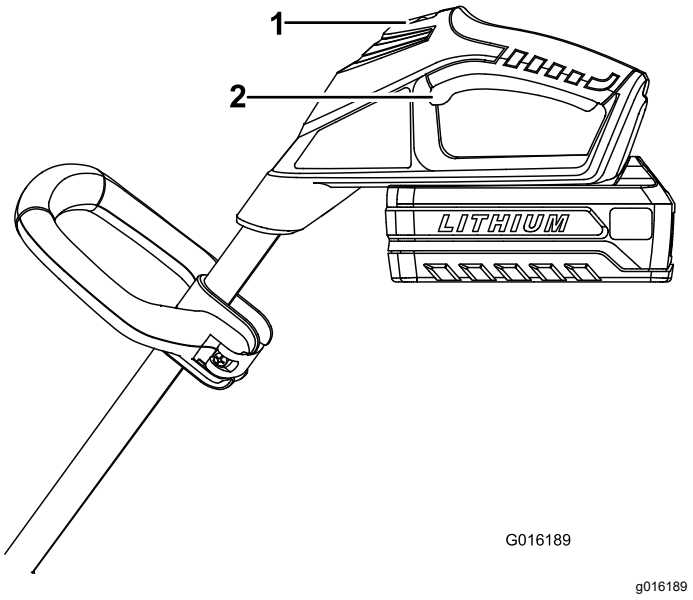

Figure 7

1. Lock switch
2. Trigger

Stopping the Trimmer

To stop the trimmer, release the trigger.

Charging the Battery Pack

Important: **For best results, charge your battery tool where the temperature is more than 4°C (39°F) but less than 40°C (104°F). To reduce the risk of serious personal injury, do not store it outside or in vehicles. Charging time will increase if you do not charge it within this range.**

Appropriate Temperature Ranges

Charge/store the battery pack at	4°C (39°F) to 40°C (104°F)*
Use the battery pack at	0°C (32°F) to 49°C (120°F)
Use the trimmer at	0°C (32°F) to 49°C (120°F)
Store the trimmer at	0°C (32°F) to 45°C (113°F)*

*Charging time will increase if you do not charge the battery within this range.

Store the tool, battery pack, and battery charger in an enclosed clean, dry area.

1. Turn the battery pack upside down and line up the battery terminal with the slot in the charger (Figure 8 and Figure 9).

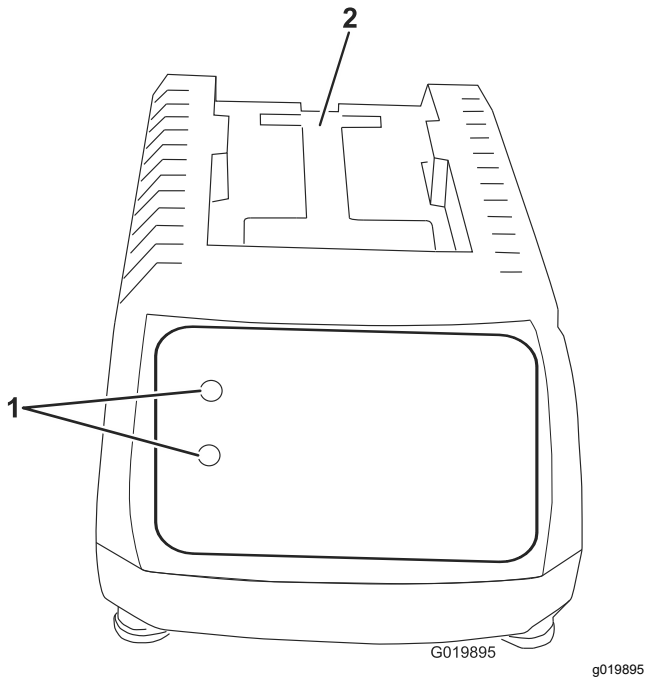

Figure 8

1. LED indicators
2. Insert the battery pack here.

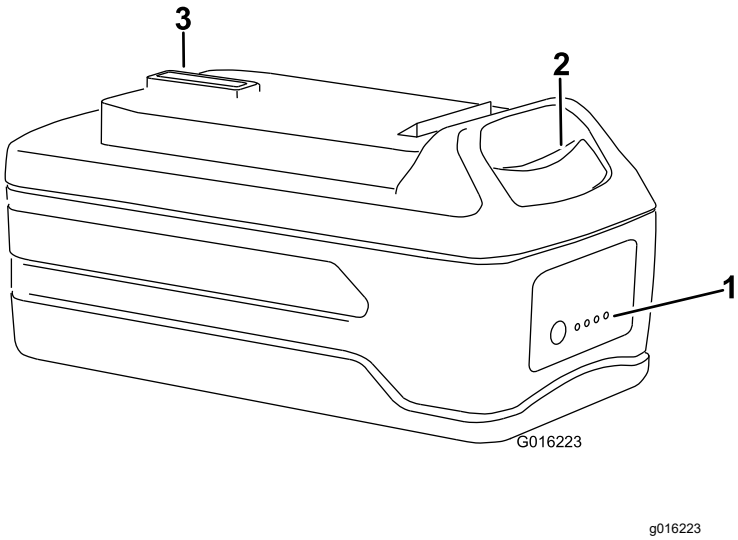

Figure 9

1. LED indicators (level of charge)
2. Release button
3. Battery terminal

2. Slide the battery pack into the charger until it clicks into place.
3. To remove the battery pack, press down on the release button and slide the battery pack backward out of the charger.
4. Refer to the table below to interpret the LED indicators on the battery charger.

Top	Bottom	Indicates
Red	Red	Battery pack is charging
Red	Green	Battery pack is charged
Red	Orange	Battery pack is too warm: Remove for approximately 30 minutes

Advancing the Line

Note: The trimmer is equipped with an auto-feed head.

1. With the trimmer running, release the switch trigger.
2. Wait two seconds, then slide the lock switch back to the ON position and squeeze the trigger.

   Note: The line extends approximately 6 mm (1/4 inch) with each stop and start of the switch trimmer until the line reaches the length of the grass deflector blade.
3. Resume trimming.

Advancing the Line Manually

Remove the battery from the trimmer, then push the red button at the base of the spool retainer while pulling on the trimmer line to manually advance the line.

Trimming



Figure 10

Edging

As an edger, press the rotator button and rotate the head as shown in Figure 11.

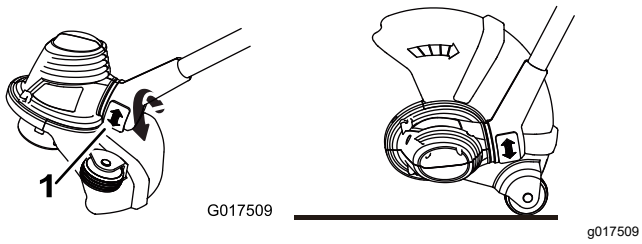

Figure 11

1. Rotator button

Operating Tips

- Keep the trimmer tilted toward the area being cut; this is the best cutting area.
- The string trimmer cuts when passing the unit from left to right. This will avoid throwing debris at you.
- Use the tip of the string to do the cutting; do not force string head into uncut grass.
- Wire and picket fences cause extra string wear, even breakage. Stone and brick walls, curbs, and wood may wear string rapidly.
- Avoid trees and shrubs. Tree bark, wood moldings, siding, and fence posts can easily be damaged by the strings.

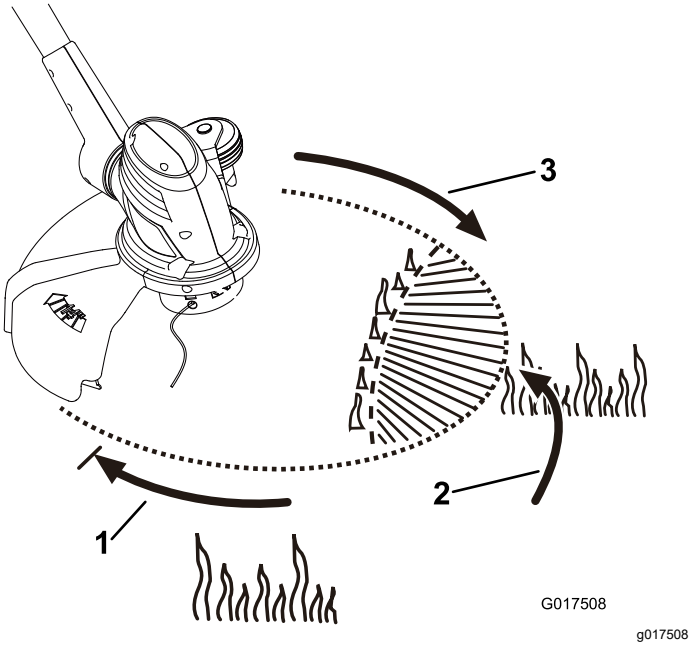

Figure 12

1. Direction of rotation
2. Ideal cutting range
3. String path

Maintenance

After each use of the trimmer, complete the following:

1. Remove the battery from the trimmer.
2. Wipe the trimmer clean with a damp cloth. Do not hose the trimmer down or submerge it in water.

   ⚠ CAUTION

   The line cut-off blade on the deflector is sharp and can cut you.

   Do not use your hands to clean the deflector shield and blade.

3. Wipe or scrape clean the cutting head area any time there is an accumulation of debris.
4. Check and tighten all fasteners. If any part is damaged or lost, repair or replace it.
5. Brush debris away from air intake vents on motor housing to prevent the motor from overheating.

Replacing the Spool

Use only 1.65 mm (0.065 inch) diameter monofilament string. Use original manufacturer's replacement string for best performance (Toro Part No. 88532 or 88524).

Important: **Using a larger diameter string will cause the motor to overheat and fail.**

1. Remove the battery.
2. Push in the tabs on the side of the spool retainer (Figure 13).

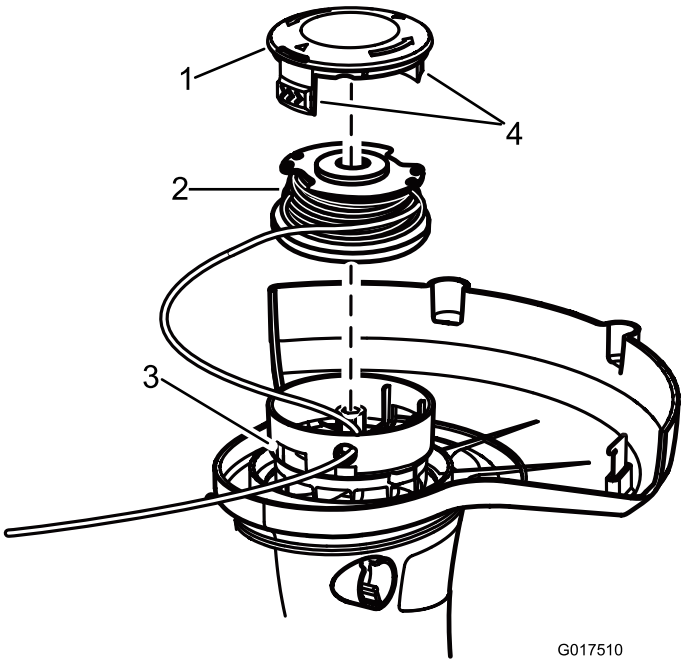

Figure 13

1. Spool retainer
2. Spool
3. Slots
4. Tabs

3. Pull the spool retainer up to remove it and remove the spool.
4. To install the new spool, ensure that the string is captured in one of the retaining slots on the new spool. Make sure the end of the string extends approximately 6 inches (152 mm).
5. Install the new spool so that the string aligns with the eyelet in the string head. Thread the string into the eyelet.
6. Pull the string extending from the string head so the string releases from the slot in the spool.
7. Reinstall the spool retainer by depressing tabs into slots and pushing down until spool retainer clicks into place.

Replacing the String

1. Remove the battery.
2. Remove the spool; refer to Replacing the Spool (Figure 13).

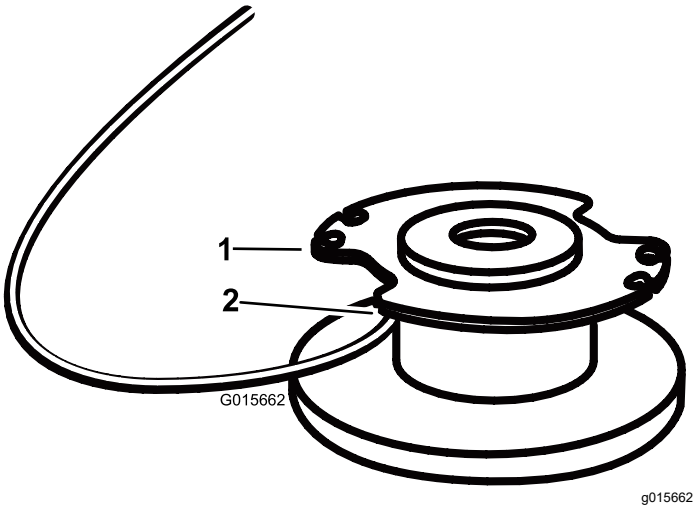

Figure 14

1. Spool
2. Hole

Note: Remove any old string remaining on the spool.

3. The spool accepts up to 4.5 m (15 ft) of string.**Use only 1.65 mm (0.065 inch) diameter monofilament string.**

   Note: Do not use any other gauge or type of string, as this could damage the trimmer.

4. Insert the string into the anchor hole in the upper part of the spool (Figure 14). Wind the string onto the spool in the direction shown by the arrows on the spool.
5. Place the string in the slot on the upper spool flange, leaving about 152 mm 6 inch (6 inches) extended beyond the slot.

   Note: Do not overfill. After winding the string, there should be at least 6 mm 1/4 inch (1/4 inch) between the wound string and the outside edge of the spool.

6. Replace the spool and the spool retainer. Refer to Replacing the Spool (page 13) earlier in this manual.

Service

Should this item need service, take the product to your Authorized Service Dealer.

Preparing the Battery Pack for Recycling

Important: **Upon removal, cover the terminals of the battery pack with heavy-duty adhesive tape. Do not attempt to destroy or disassemble the battery pack or remove any of its components. Recycle or properly dispose of lithium-ion battery packs at a battery recycling facility.**

	For more information on recycling lithium-ion battery packs and to locate the battery recycling facility closest to you, visit www.Call2Recycle.org (US and Canada only). If you are located outside of the US and Canada, please contact your authorized Toro distributor.

Storage

- Clean all foreign material from the product.
- Store it in a well-ventilated place that is inaccessible to children.
- Keep away from corrosive agents such as garden chemicals and de-icing salts.

Troubleshooting

Perform only the steps described in these instructions. All further inspection, maintenance, and repair work must be performed by an authorized service center or a similarly qualified specialist if you cannot solve the problem yourself.

Using the battery when it is hot can reduce the operating time. The battery automatically stops working when it is overheated to prevent damage to it. Remove the battery from the charger and allow it to cool before placing it back into the trimmer.

Using the battery when there is moisture on the leads can cause the trimmer to malfunction. Allow the battery to dry or wipe it dry before placing it back into the trimmer.

Notes:

Notes:

California Proposition 65 Warning Information

What is this warning?

You may see a product for sale that has a warning label like the following:



WARNING: Cancer and Reproductive Harm—www.p65Warnings.ca.gov.

What is Prop 65?

Prop 65 applies to any company operating in California, selling products in California, or manufacturing products that may be sold in or brought into California. It mandates that the Governor of California maintain and publish a list of chemicals known to cause cancer, birth defects, and/or other reproductive harm. The list, which is updated annually, includes hundreds of chemicals found in many everyday items. The purpose of Prop 65 is to inform the public about exposure to these chemicals.

Prop 65 does not ban the sale of products containing these chemicals but instead requires warnings on any product, product packaging, or literature with the product. Moreover, a Prop 65 warning does not mean that a product is in violation of any product safety standards or requirements. In fact, the California government has clarified that a Prop 65 warning "is not the same as a regulatory decision that a product is 'safe' or 'unsafe.'" Many of these chemicals have been used in everyday products for years without documented harm. For more information, go to https://oag.ca.gov/prop65/faqs-view-all.

A Prop 65 warning means that a company has either (1) evaluated the exposure and has concluded that it exceeds the "no significant risk level"; or (2) has chosen to provide a warning based on its understanding about the presence of a listed chemical without attempting to evaluate the exposure.

Does this law apply everywhere?

Prop 65 warnings are required under California law only. These warnings are seen throughout California in a wide range of settings, including but not limited to restaurants, grocery stores, hotels, schools, and hospitals, and on a wide variety of products. Additionally, some online and mail order retailers provide Prop 65 warnings on their websites or in catalogs.

How do the California warnings compare to federal limits?

Prop 65 standards are often more stringent than federal and international standards. There are various substances that require a Prop 65 warning at levels that are far lower than federal action limits. For example, the Prop 65 standard for warnings for lead is 0.5 µg/day, which is well below the federal and international standards.

Why don't all similar products carry the warning?

- Products sold in California require Prop 65 labelling while similar products sold elsewhere do not.
- A company involved in a Prop 65 lawsuit reaching a settlement may be required to use Prop 65 warnings for its products, but other companies making similar products may have no such requirement.
- The enforcement of Prop 65 is inconsistent.
- Companies may elect not to provide warnings because they conclude that they are not required to do so under Prop 65; a lack of warnings for a product does not mean that the product is free of listed chemicals at similar levels.

Why does Toro include this warning?

Toro has chosen to provide consumers with as much information as possible so that they can make informed decisions about the products they buy and use. Toro provides warnings in certain cases based on its knowledge of the presence of one or more listed chemicals without evaluating the level of exposure, as not all the listed chemicals provide exposure limit requirements. While the exposure from Toro products may be negligible or well within the "no significant risk" range, out of an abundance of caution, Toro has elected to provide the Prop 65 warnings. Moreover, if Toro does not provide these warnings, it could be sued by the State of California or by private parties seeking to enforce Prop 65 and subject to substantial penalties.



Count on it.