Form No. 3326–461

TORO®

Wheel Horse®

52″ Mower

for Lawn and Garden Tractors

Model No. 78253 – 200000001 & Up

Operator’s Manual

CE

English (GB)

Introduction

We want you to be completely satisfied with your new product, so feel free to contact your local Authorized Service Dealer for help with service, genuine replacement parts, or other information you may require.

Whenever you contact your Authorized Service Dealer or the factory, always know the model and serial numbers of your product. These numbers will help the Service Dealer or Service Representative provide exact information about your specific product. You will find the model and serial number plate located in a unique place on the product as shown below.

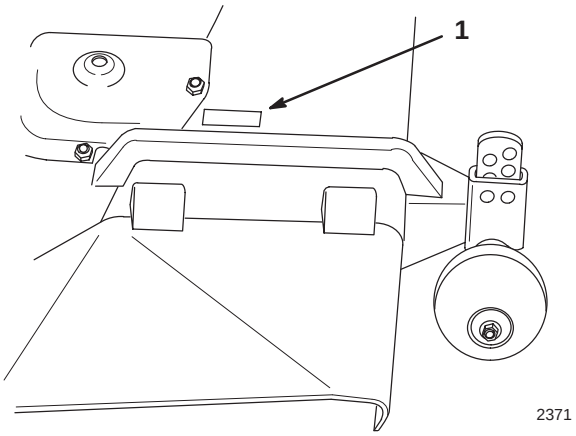

1. Model and Serial Number Plate

For your convenience, write the product model and serial numbers in the space below.

Model No: _____

Serial No. _____

The warning system in this manual identifies potential hazards and has special safety messages that help you and others avoid personal injury, even death. DANGER, WARNING and CAUTION are signal words used to identify the level of hazard. However, regardless of the hazard, be extremely careful.

DANGER signals an extreme hazard that will cause serious injury or death if the recommended precautions are not followed.

WARNING signals a hazard that may cause serious injury or death if the recommended precautions are not followed.

CAUTION signals a hazard that may cause minor or moderate injury if the recommended precautions are not followed.

Two other words are also used to highlight information. “Important” calls attention to special mechanical information and “Note” emphasizes general information worthy of special attention.

The left and right side of the machine is determined by sitting on the seat in the normal operator’s position.

© The Toro Company – 1997

Printed in USA

Contents

	Page
Safety and Instruction Decals	2
Installation	3
Loose Parts	3
Mower Preparation	4
Tractor Preparation	6
Installing the Mower	8
Transport Height Adjustment	9
Side-to-Side Mower Leveling	9
Front-to-Rear Blade Slope	10
Removing the Mower	11
Operation	12
Side Discharge	12
Operating the Power Take Off (PTO)	12
Attachment Lift Lever	13
Attachment Power Lift	13
Adjusting Dial-A-Height	14
Adjusting Anti-Scalp Wheels	14
Tips for Mowing Grass	15
Maintenance	16
Service Interval Chart	16
Cutting Blade	17
Greasing and Lubrication	19
Blade Drive Belt	19
Power Take Off (PTO) Belt	20
Washing Underside of Mower	20
Storage	22
Troubleshooting	23

Safety and Instruction Decals

Safety decals and instructions are easily visible to the operator and are located near any area of potential danger. Replace any decal that is damaged or lost.

ON GRASS DEFLECTOR
(Part No. 93–7317)



ON MOWER LEFT AND DISCHARGE CHUTE
(Part No. 93–7316)

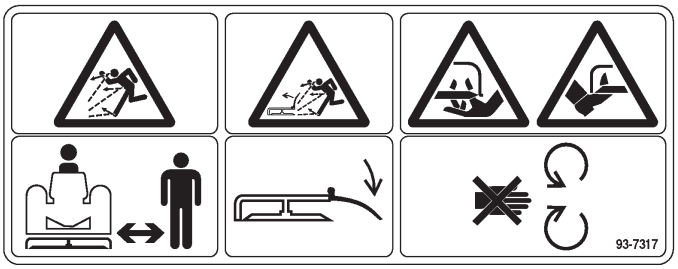

NEXT TO GAGE WHEELS
(Part No. 93–7282)

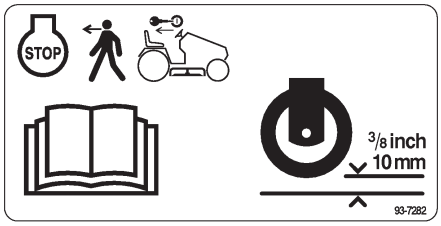

UNDER GRASS DEFLECTOR
(Part No. 93–7009)



ON MOWER LEFT SIDE
(Part No. 94–2543)

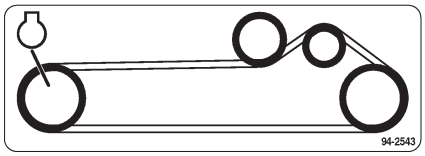

ON MOWER REAR CENTER
(Part No. 94–4937)

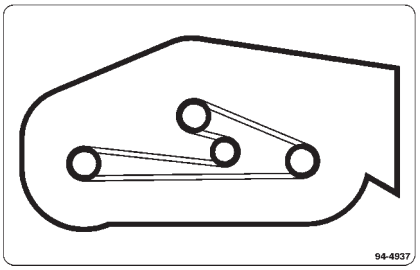

Installation

Loose Parts

Note: Use the chart below to identify parts used for assembly.

DESCRIPTION	QTY.	USE
Gage wheel	2	Install gage wheels
Shoulder bolt	2	
Locknut 3/8–24 (with patch on threads)	2	
Rear link bracket	1	Install rear link bracket
Washer 1/2” (13 mm)	2	
Cotter pin 1” (26 mm)	2	
Adjustable links	2	Install front mount to mower
Washer	2	
Cotter pin 1” (26 mm)	2	
Grass deflector	1	Install grass deflector
Spring	2	
Bolt 3/8– 24 x 3-1/2” (89 mm)	2	
Locknut 3/8–24	2	
Up stop	1	Install mower up stop
Hairpin cotter 3-3/8” (85 mm)	2	Install mower to tractor
Washer 3/4” (19 mm)	2	
Link pin	1	
Hairpin cotter2-9/16” (65 mm)	3	
Washer	3	
Operator’s Manual	1	Read before operating
Warranty card	1	

IMPORTANT: If you have a 1999 or earlier tractor and are installing a 2000 or later 52 in. deck, a kit will be needed to install the deck. Obtain this kit from an Authorized Service Dealer.

Mower Preparation

1. Attach gage wheels to the outside of arms on rear carrier assembly. Grease fitting on wheel must face in (Fig. 1).

2. Secure with shoulder bolt and 3/8” lock nut, with internal locking patch on threads (Fig. 1).

Note: Grease wheels.

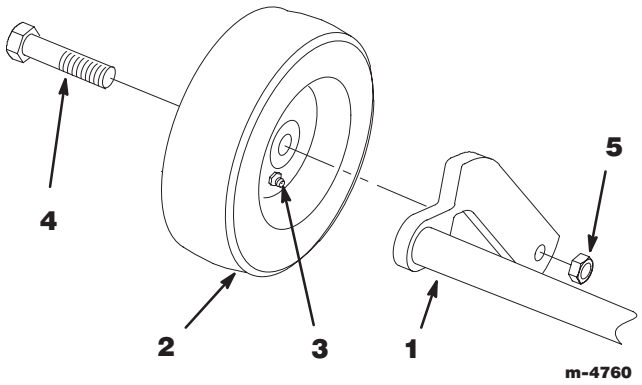

Figure 1

1. Carrier arm
2. Wheel
3. Grease fitting in
4. Shoulder bolt
5. Lock nut 3/8” (with patch)

3. Install link bracket between mower bracket and carrier lift arm (Fig. 2).

4. Secure with 1/2” washers and 1” (26 mm) cotter pins (Fig. 2).

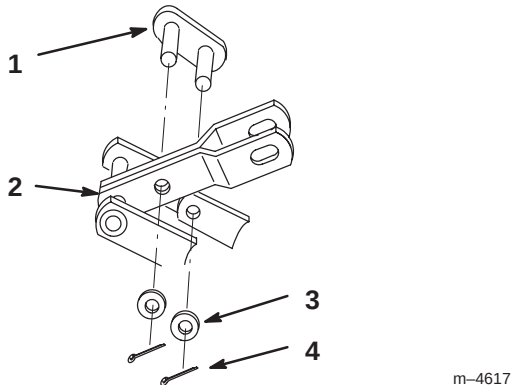

Figure 2

1. Link Bracket
2. Carrier lift arm
3. Washer 1/2”
4. Cotter pin 1” (26 mm)

5. Rotate adjustable links so bolt heads are up and place between brackets, as shown, on front of the mower (Fig. 3).

6. Secure to brackets with 1/2” washers and 1” (26 mm) cotter pins (Fig. 3).

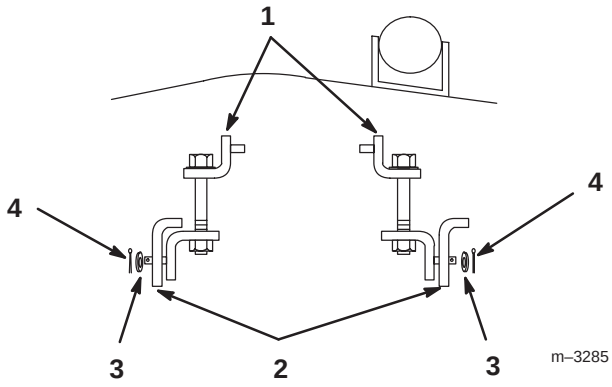

Figure 3

1. Adjustable link
2. Bracket
3. Washer 1/2”
4. Cotter pin 1” (26 mm)

7. Place springs into brackets on mower with hooked ends over raised back (Fig. 4).

8. Align grass deflector with holes in brackets and spring straight ends in space under hinge and above deflector (Fig. 4).

9. Secure deflector to bracket with 3/8–3-1/2 (89 mm) bolts through grass deflector, springs and brackets. Secure with 3/8” lock nuts (Fig. 4).

10. Lift grass deflector and check that it is spring loaded and pivots freely to the full down position.

IMPORTANT: Grass deflector must be spring loaded in the down position. Lift deflector up to test that it snaps to the full down position.

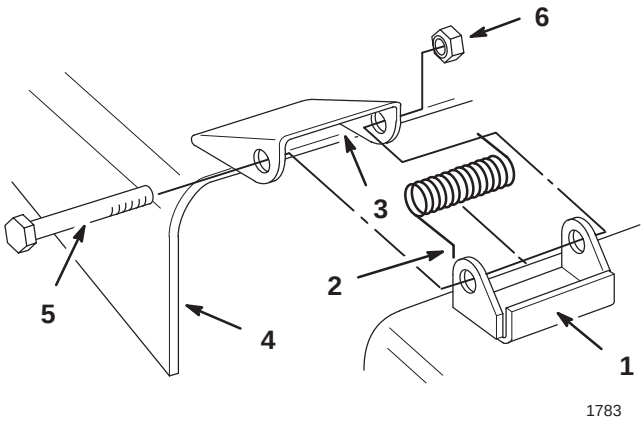

Figure 4

1. Bracket
2. Spring hook end
3. space for spring
4. Grass deflector
5. Bolt 3/8–3-1/2” (89 mm)
6. Lock nut 3/8”

⚠ DANGER

POTENTIAL HAZARD

- **Without the grass deflector, discharge cover, or complete grass catcher assembly mounted in place, you and others are exposed to blade contact and thrown debris.**

WHAT CAN HAPPEN

- **Contact with rotating mower blade(s) and thrown debris will cause injury or death.**

HOW TO AVOID THE HAZARD

- **NEVER remove the grass deflector from the mower because the grass deflector routes material down toward the turf. If the grass deflector is ever damaged, replace it immediately.**
- **Never put your hands or feet under the mower.**
- **Never try to clear discharge area or mower blades unless you move the power take off (PTO) to “OFF” and rotate the ignition key to “OFF.” Also remove the key and pull the wire off the spark plug(s).**

Tractor Preparation

1. Park the machine on a level surface and lower attachment lift to the full “DOWN” position. Refer to Operation: Attachment Lift page 13.

Note: Turn Dial-A-Height control to allow lift to go to full “MOUNTING” position.

2. Adjust air pressure in tires to recommended pressure.

3. Adjust transport height nut until bottom of rear lift arms are approximately 7-1/4” (188 mm) from the level surface (Fig. 5).

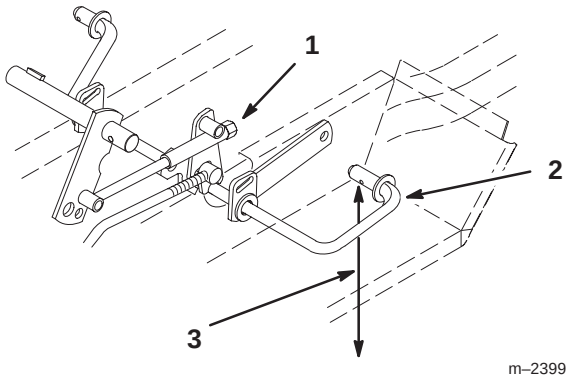

Figure 5

1. Transport height nut
2. Rear lift arms
3. 7-1/4” (188 mm)

4. Raise attachment lift to the full “UP” position. Refer to Operation: Attachment Lift page 13.

5. Remove E-ring, washer and lift link from front lift arm (Fig. 6).

6. Hold front lift arm up until stop contacts frame (Fig. 6).

7. Push back hard on lift rod, to raise linkage, and check location of lift rod compared to mounting hole location.

8. Adjust length of lift rod, by turning in\out of trunnion, so end just slides into mounting hole in front lift arm (Fig. 6).

9. Slide lift rod into hole and secure with previously removed washer and E-ring (Fig. 6).

10. Check that stop is 0”–1/8” (0–3 mm) away frame when fully assembled and lift in the full “UP” position.

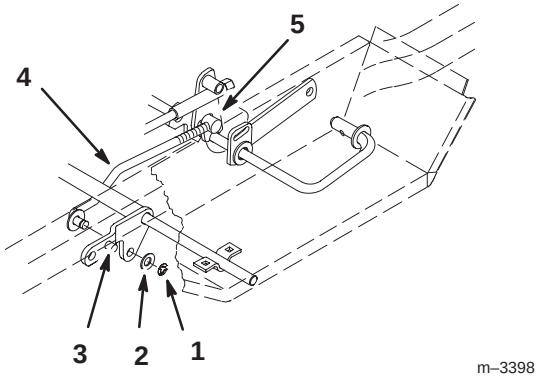

Figure 6

1. E-ring
2. Washer
3. Stop on lift arm
4. Lift link
5. Trunnion

11. Unplug clutch wire terminal from tractor wire harness and remove retainer clip (Fig 8). Remove center retaining bolt and washer then slide double pulley clutch off shaft (Fig. 7).

Note: Center bolt is installed with thread locking compound, impact wrench may be required to remove.

Note: Save hardware for use when installing single pulley clutch.

12. Position clutch so wire points toward right front of tractor and point of triangle is in captured up-stop. Align key in clutch with keyway and slide single pulley clutch onto shaft (Fig. 7). Secure with thread locking compound on threads of previously removed hardware.

13. Torque bolt to 55 ft-lbs. (75 N·m)

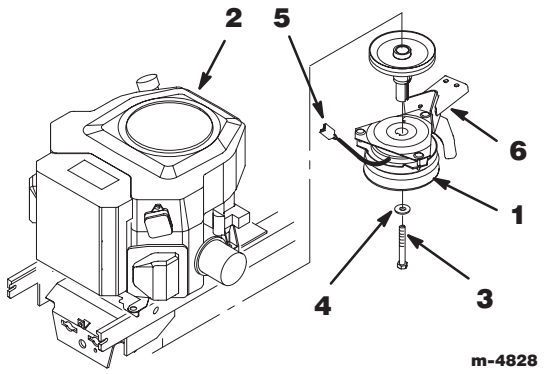

Figure 7

1. Single Pulley Clutch – Included with deck
2. Engine
3. Bolt
4. Washer
5. Clutch Plug–in
6. Upstop

14. Install retainer clip and clutch plug–in to right side of frame as shown in figure 8. Make sure there is no slack in plug–in wire between clutch and retainer clip.

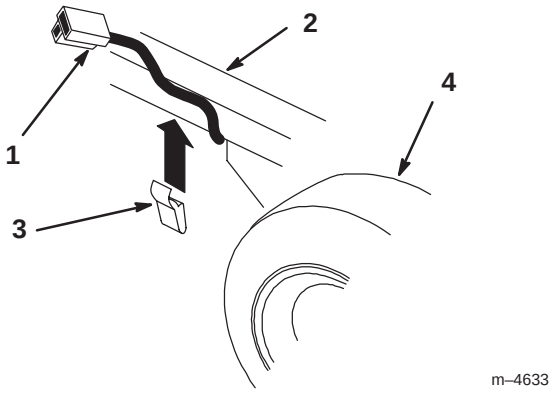

Figure 8

1. Clutch Plug–in
2. Right side of frame
3. Retainer Clip
4. Right Front Tire

15. Plug clutch plug–in into terminal of tractor wire harness (Fig.7).

16. Remove bolts securing existing up-stop to tractor frame (Fig. 9).

17. Place J-clip, holding drain hose, against frame and mount new, long, up-stop to frame with previously removed hardware (Fig. 9).

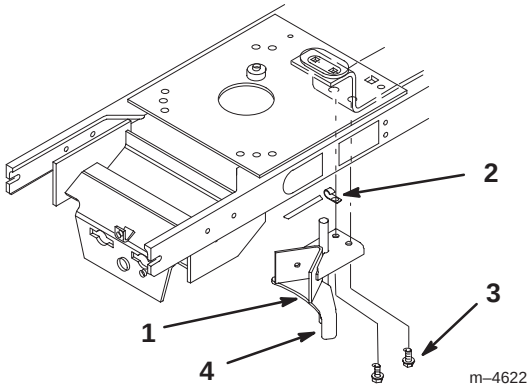

Figure 9

1. Up-stop (long)
2. J-clip
3. Existing bolts
4. Ensure this tab is in slot in clutch

Installing the Mower

1. Park the machine on a level surface, disengage the power take off (PTO), set the parking brake, and turn the ignition key to “OFF” to stop the engine. Remove the key.

2. Turn the front wheels straight ahead and raise attachment lift lever all the way to the latched position; refer to tractor Operator’s Manual.

3. Slide the mower under tractor from right side, turning front wheels as necessary. Align rear mounting bushings with ends of lift arms.

4. Turn Dial-a-Height knob counterclockwise, all the way, and lower attachment lift lever to the mounting position; refer to Operation page 14.

5. Place rear guide bushings, first left side then right, onto lift arms then slide deck left into position (Fig. 10).

6. Secure deck to rear lift arms with 3/4” washers and large hairpin cotters (Fig. 10).

7. Install front adjustable links to front lift arms with 1/2” washer and small hairpin cotter (Fig. 10).

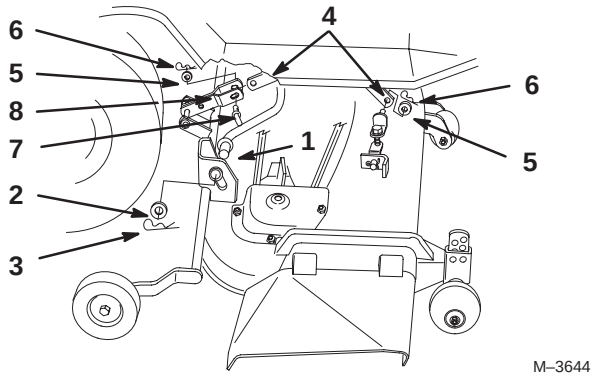

Figure 10

1. Lift arm
2. Washer 3/4”
3. Hair pin cotter–large
4. Attachment lift
5. Washer 1/2”
6. Hair pin cotter–small
7. Link pin
8. Carrier Lift Arm

⚠ CAUTION

POTENTIAL HAZARD
- **Movement of powerlift can injure a person when aligning deck with lift arms.**

WHAT CAN HAPPEN
- **Contact between carrier lift arm and attachment lift can cause serious injury.**

HOW TO AVOID THE HAZARD
- **Do not place hands between carrier lift arm and attachment lift while powerlift is on.**
- **Turn key off and remove, after carrier lift arm and attachment lift are aligned.**

8. Attach rear link to attachment lift with link pin, 1/2” washer and small hairpin cotter (Fig. 10).

Note: Use powerlift to align carrier lift arm with attachment lift. Insert link when holes are aligned.

9. Pull on drive belt and rotate onto engine pulley to install (Fig. 11).

Note: Make sure belt is properly located in engine and deck pulleys and around idler pulley.

10. Adjust belt guide so distance between belt and guide is 1/8” (4 mm) (Fig. 11).

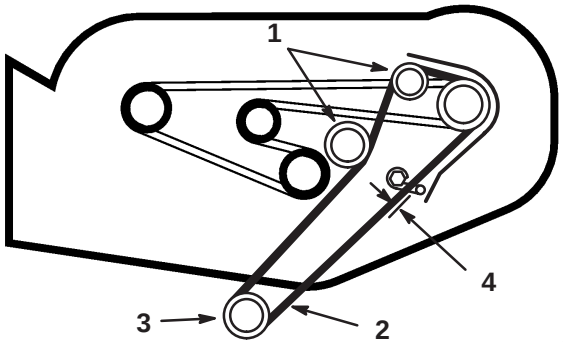

Figure 11

Top View

1. Idler pulley
2. Drive belt
3. Engine pulley
4. 1/8” (4 mm)

11. Check mower level; refer to Side-to-Side Mower Leveling page 9, and Front-to-Rear Blade Leveling page 10.

12. Raise attachment lift lever all the way to the latched position and adjust mower transport height adjustment; refer to page 9.

Transport Height Adjustment

Transport height should be properly adjusted after Tractor Preparation, page 6; however if the rear brackets contact the footrest or up–stop contacts the top of mower in the raised position, adjustment is required.

1. Adjust by turning transport height nut, (Fig. 12) on lift mechanism, clockwise to raise or counterclockwise to lower mower.

2. Adjust nut until there is 1/4” (6 mm) clearance between rear brackets and footrest and up–stop and mower.

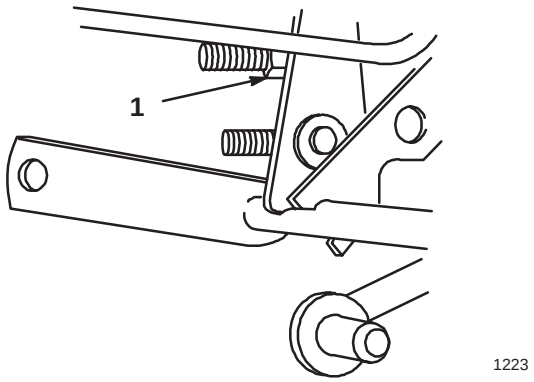

Figure 12

1. Nut

Side-to-Side Mower Leveling

The mower blades must be level from side to side. Check the side-to-side level any time you install the mower or when you see an uneven cut on your lawn. Before you level the mower, set the air pressure in the front and rear tires to 20 psi (138 kPa).

3” to 4” (76-102 mm) Height-of-Cut Range

When the mower height-of-cut is set to the 3” to 4” (76-102 mm) range the mower is suspended from the tractor.

1. Park the machine on a level surface, disengage the power take off (PTO), set the parking brake, and turn the ignition key to “OFF” to stop the engine. Remove the key.

2. Raise attachment lift lever all the way to the latched position.

3. Carefully rotate blade(s) side to side (Fig. 13). Measure between the outside cutting edges and the flat surface (Fig. 13). If both measurements are not within 3/16” (5 mm), an adjustment is required; refer to steps 4 and 6.

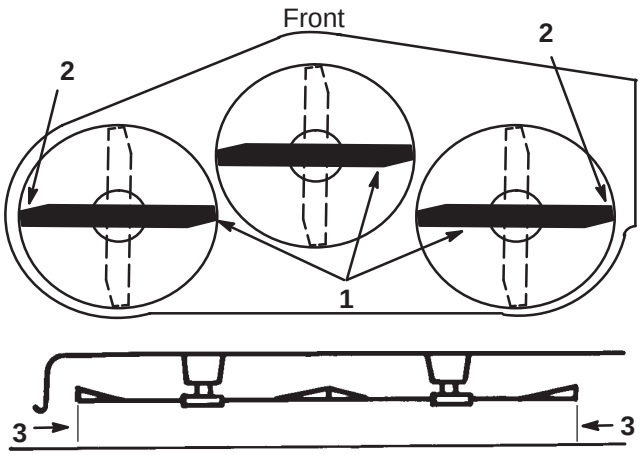

Figure 13

1. Blades side to side
2. Outside cutting edges
3. Measure here

4. Loosen adjustment bolt on one side and rotate hanger bracket to raise or lower mower (Fig. 14).

5. After adjusting, tighten bolt and check side-to-side level.

IMPORTANT: If hanger is rotated to the end of adjustment on one side and mower is not level, adjust the opposite side.

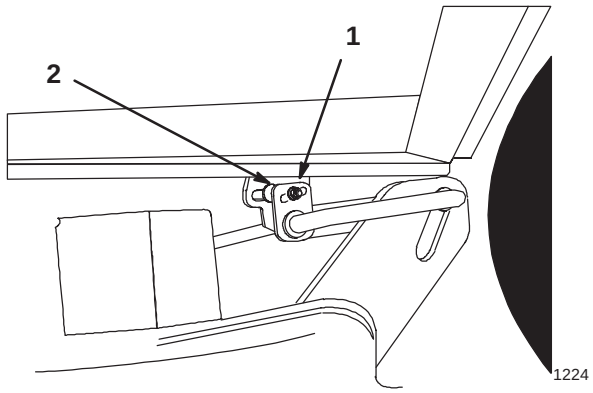

Figure 14

1. Bolt
2. Hanger bracket

6. Now check the front-to-rear blade slope; refer to Front-to-Rear Blade Slope, page 10.

1-1/2”to 3” (38-76 mm) Height-of-Cut Range

When the mower height-of-cut is set to the 1-1/2” to 3” (38-76 mm) range the rear gage wheels contact the ground. There is no side-to-side adjustment for this height range, see Front-to-Rear Blade Slope.

Front-to-Rear Blade Slope

Check the front-to-rear blade slope any time you install the mower. Before checking the slope, set air pressure in the front and rear tires to 20 psi (138 kPa). If the front blade tip is not 0–3/8” (0–9.5 mm) lower than the rear blade tip, adjust the blade slope using the following instructions:

1. Park the machine on a level surface, disengage the power take off (PTO), set the parking brake, and turn the ignition key to “OFF” to stop the engine. Remove the key.

2. Check and adjust side-to-side blade level if you have not checked the setting; refer to Side-to-Side Mower Leveling, page 9.

3. Adjust the Dial-A-Height knob so the height-of-cut is in the middle of the range and lower attachment lift.

4. Carefully rotate blades so they are facing front and rear (Fig. 15).

5. Measure between the tip of the front blade (Fig. 15). and the tip of the rear blade to the flat surface. If the front blade tip is not 0–3/8” (0–9.5 mm) lower than the rear blade tip adjust front adjustment links.

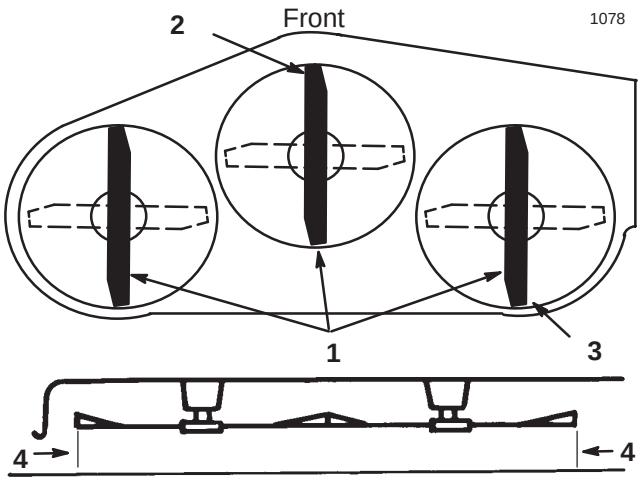

Figure 15

1. Blade front to rear
2. Measure front blade tip
3. Measure rear blade tip
4. Measure here

6. To adjust front-to rear blade level loosen jam nuts on front adjustable links. (Fig. 16).

7. Rotate the bolt on front adjustable links to change front-to rear blade level (Fig. 16).

Note: To raise the front of the mower, shorten the adjustable links by turning bolt clockwise. Adjust both sides evenly.

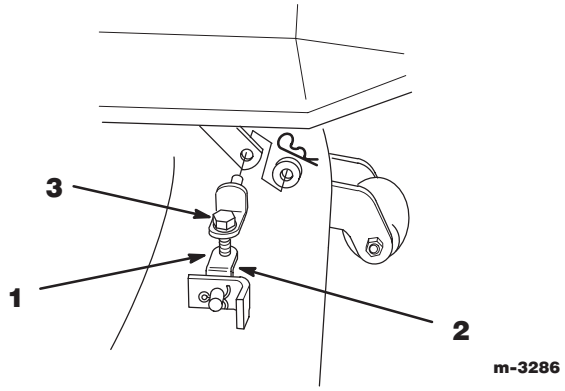

Figure 16

1. Adjustable link
2. Jam nut (not shown)
3. Bolt

8. When front-to-rear slope is correct, tighten jam nuts. Recheck side-to-side mower level; refer to Side-to-Side Mower Leveling, page 9.

Removing the Mower

1. Park the machine on a level surface, disengage the power take off (PTO), set the parking brake, and turn the ignition key to “OFF” to stop the engine. Remove the key.

2. Raise attachment lift, turn Dial-a-Height knob counterclockwise, all the way, and lower the attachment lift lever to the mounting position; refer to tractor Operator’s Manual.

3. Remove mower drive belt from engine pulley.

4. Remove hairpin cotter, washer and link pin from carrier lift arm and remove from attachment lift (Fig. 17).

5. Remove hairpin cotter and washer from front adjustable link(s) and remove from front lift arm (Fig. 17).

6. Remove hairpin cotters and washers from carrier lift arms (Fig. 17).

7. Slide deck right, off carrier lift arms (Fig. 17).

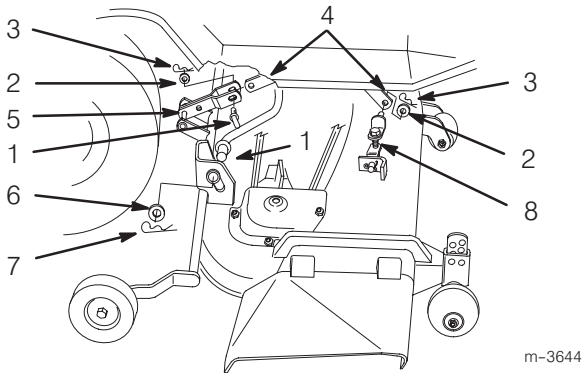

Figure 17

1. Link pin
2. Washer 1/2”
3. Hair pin cotter–small
4. Attachment lift
5. Carrier lift arm
6. Washer 3/4”
7. Hair pin cotter–large
8. Front adjustable link

8. Raise attachment lift all the way to the latched position. Turn the front wheels, as necessary, and slide mower out to the the right side.

Note: Save all hardware, washers and hairpin cotters for use when installing deck.

Operation

Side Discharge

⚠ DANGER

POTENTIAL HAZARD

- **Without the grass deflector, discharge cover, or complete grass catcher assembly mounted in place, you and others are exposed to blade contact and thrown debris.**

WHAT CAN HAPPEN

- **Contact with rotating mower blade(s) and thrown debris will cause injury or death.**

HOW TO AVOID THE HAZARD

- **NEVER remove the grass deflector from the mower because the grass deflector routes material down toward the turf. If the grass deflector is ever damaged, replace it immediately.**
- **Never put your hands or feet under the mower.**
- **Never try to clear discharge area or mower blades unless you move the power take off (PTO) to "OFF" and rotate the ignition key to "OFF." Also remove the key and pull the wire off the spark plug(s).**

1. The mower has a hinged grass deflector that disperses clippings to the side and down toward the turf.

Operating the Power Take Off (PTO)

The power take off (PTO) engages and disengages power to the electric clutch.

While the ignition key is in the "RUN" or "LIGHTS" positions and the power take off (PTO) is engaged "ON", the PTO light, in the Indicator Module, will be "ON". When this light is "ON" it is a reminder; the starter will not crank and to turn the off PTO before getting off.

Engaging the Power Take Off (PTO)

1. Depress the brake and/or clutch pedal(s) to stop the machine.

2. Pull the power take off (PTO) to "ON" (Fig. 18).

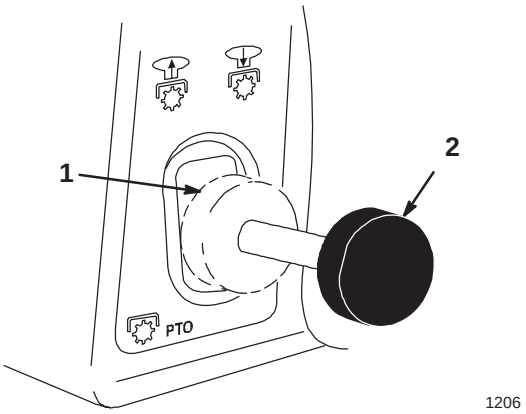

Figure 18

1. Off-Disengaged 2. On-Engaged

Disengaging the Power Take Off (PTO)

1. Depress the brake and/or clutch pedal(s) to stop the machine.

2. Push the power take off (PTO) to "OFF" (Fig.18).

Attachment Lift Lever

The attachment lift lever (Fig. 19) is used to raise and lower various attachments.

Raising Attachments

1. Depress the brake pedal to stop the machine.

2. Pull attachment lift lever rearward until latch locks. In this position the lift will hold the attachment in the up, or raised position.

Lowering Attachments

1. Depress the brake and/or clutch pedal(s) to stop the machine.

2. Pull attachment lift lever rearward, to release lift pressure, and push the button on top to release the latch. Move lift lever forward to lower attachment.

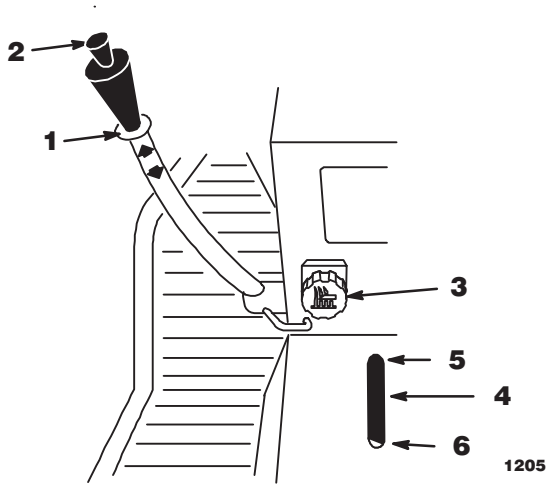

Figure 19

1. Lift lever
2. Button
3. Dial-A-Height
4. Indicator
5. High
6. Mounting position

Attachment Power Lift

The attachment power lift (optional on some models) (Fig. 20) is used to raise and lower attachments.

Raising Attachments

1. Turn key to the “ON” or “RUN” position (Fig. 20).

2. Push the lift switch in the “UP” direction to raise the attachment lift (Fig. 20). This will lift and hold the attachment in the up, or raised position.

Lowering Attachments

1. Turn key to the “ON” or “RUN” position (Fig. 20).

2. Push the lift switch in the “DOWN” direction to lower the attachment lift (Fig. 20). This will lower the attachment lift.

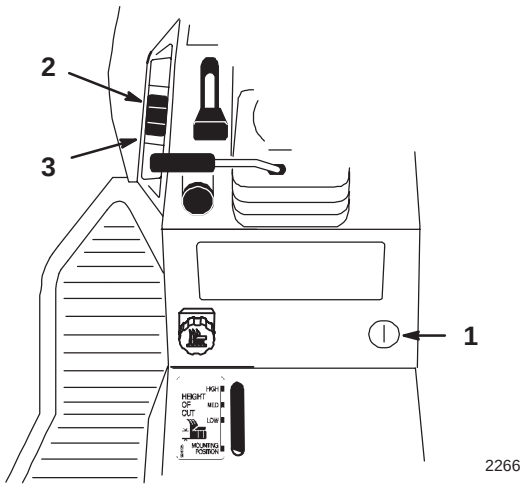

Figure 20

1. Key
2. Lift switch UP
3. Lift switch DOWN

Adjusting Dial-A-Height

The Dial-A-Height control (Fig. 19) is used to limit the downward travel of the attachment. The Dial-A-Height knob is rotated to change the location of this stop, up or down.

1. Raise the attachment lift lever: Refer to Raising Attachments. In the raised, position the Dial-A-Height knob (Fig. 19) can be rotated to change the stop location. Turn clockwise to raise and counterclockwise to lower the height of the attachment.

2. The Dial-A-Height indicator (Fig. 19) will show the change, high to low, in attachment lift height as adjustment is made.

Adjusting Anti-Scalp Wheels

The anti-scalp wheels must be adjusted in the proper hole location for each height-of-cut position.

1. After adjusting height-of-cut. raise the attachment lift lever: Refer to Raising Attachments.

2. Remove hairpin cotter and pin to change hole location (Fig. 21).

3. Select a hole position so the anti-scalp wheel is 3/8” (9.5 mm) off the ground for the height-of-cut to be used (Fig. 21).

4. Insert pin and secure with hairpin cotter.

5. Repeat adjustment on other anti-scalp wheels.

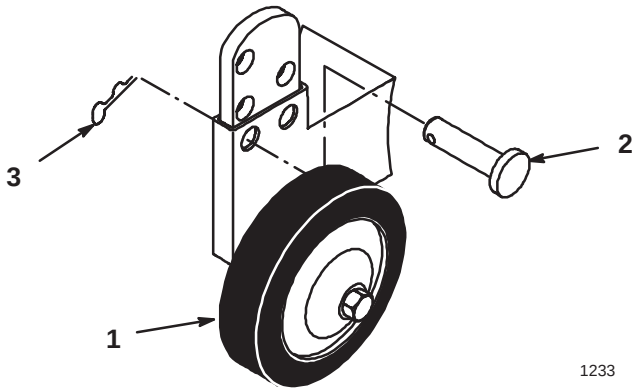

Figure 21

1. Wheel
2. Pin
3. Hair pin Cotter

Tips for Mowing Grass

Fast Throttle Setting

For best mowing and maximum air circulation, operate the engine at “FAST.” Air is required to thoroughly cut grass clippings, so do not set the height-of-cut so low, as to totally surround the mower by uncut grass. Always try to have one side of the mower free from uncut grass, which allows air to be drawn into the mower.

Cutting a Lawn for the First Time

Cut grass slightly longer than normal to ensure the cutting height of the mower does not scalp any uneven ground. However, the cutting height used in the past is generally the best one to use. When cutting grass longer than six inches tall, you may want to cut the lawn twice to assure an acceptable quality-of-cut.

Cut 1/3 of the Grass Blade

It is best to cut only about 1/3 of the grass blade. Cutting more than that is not recommended, unless grass is sparse or it is late fall when grass grows more slowly.

Mowing Direction

Alternate mowing direction to keep the grass standing straight. This also helps disperse clippings which enhances decomposition and fertilization.

Mow at Correct Intervals

Normally, mow every 4 days. But remember, grass grows at different rates at different times. So to maintain the same cutting height, which is a good practice, mow more often in early spring. As the grass growth rate slows in mid summer, mow less frequently. If you cannot mow for an extended period, first mow at a high cutting height; then mow again 2 days later at a lower height setting.

Ground Speed

To improve cut quality, use slower ground speed.

Avoid Cutting Too Low

If the cutting width of the mower is wider than the mower you previously used, raise the cutting height to ensure uneven turf is not cut too short.

Long Grass

If the grass is ever allowed to grow slightly longer than normal, or if it contains a high degree of moisture, raise the cutting height higher than usual and cut the grass at this setting. Then cut the grass again using the lower, normal setting.

When Stopping

If the machine’s forward motion must be stopped while mowing, a clump of grass clippings may drop onto your lawn. To avoid this:

1. With the blade(s) “ENGAGED,” move onto a previously cut area.
2. To disperse the clippings evenly, raise the mower one or two height-of-cut settings while driving forward with the blade(s) “ENGAGED.”

Keep the Underside of the Mower Clean

Clean clippings and dirt from the underside of the mower after each use. If grass and dirt build up inside the mower, cutting quality will eventually become unsatisfactory.

Blade Maintenance

Maintain a sharp blade throughout the cutting season because a sharp blade cuts cleanly without tearing or shredding the grass blades. Tearing and shredding turns grass brown at the edges, which slows growth and increases the chance of disease. Every 30 days, check the cutter blade(s) for sharpness and file down any nicks.

Maintenance

Service Interval Chart

Service Operation	Each Use	5 Hours	25 Hours	50 Hours	Spring Service	Notes
Cutter Blade—check		X	X		X	
Grease–Mower spindles, wheels				X	X	
Belts—check for wear/cracks					X	
Mower Housing—clean	X	X			X	
Chipped Surfaces—paint					X	

⚠ CAUTION

POTENTIAL HAZARD

- **If you leave the key in the ignition switch, someone could start the engine.**

WHAT CAN HAPPEN

- **Accidental starting of the engine could seriously injure you or other bystanders.**

HOW TO AVOID THE HAZARD

- **Remove the key from the ignition switch and pull the wire off the spark plug before you do any maintenance. Also push the wire aside so it does not accidentally contact the spark plug.**

Cutting Blade

To assure a superior quality of cut, keep the blade(s) sharp. For convenient sharpening and replacement, you may want to have an extra blade(s).

⚠ WARNING

POTENTIAL HAZARD

- **A blade that is worn or damaged could break apart and pieces could be thrown at bystanders or at you as you use the mower.**

WHAT CAN HAPPEN

- **Pieces of blade that may be thrown could seriously injure or kill you or bystanders.**

HOW TO AVOID THE HAZARD

- **Periodically inspect the blade for wear and damage. Immediately install a new blade if it is worn or damaged.**

Inspecting the Blade(s)

1. Remove the mower; refer to Removing the Mower, page 11.

2. Inspect the cutting edges (Fig. 22). If the edges are not sharp or have nicks, remove the blade(s) and sharpen them; refer to Sharpening the Blade(s), page 18.

3. Inspect the blade(s), especially the curved area (Fig. 22). If you notice any damage, wear, or a slot forming in this area (Fig. 22), immediately install a new blade.

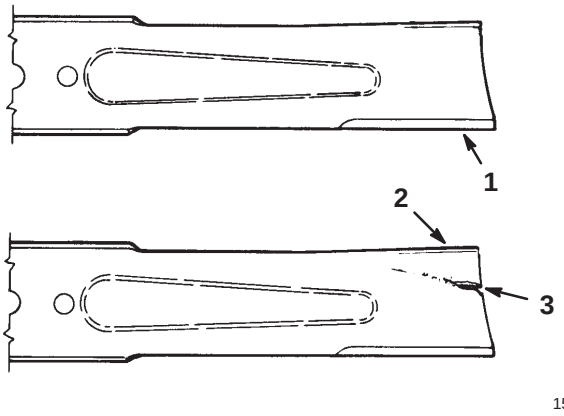

Figure 22

1. Cutting edge
2. Curved area
3. Wear/slot forming

Removing the Blade

1. Remove the mower; refer to Removing the Mower, page 11.

2. Carefully tip the mower over.

3. Remove the bolt, blade stiffener and blade (Fig. 23). A block of wood may be wedged between the blade and the mower to lock the blade when you are removing the bolt.

4. Inspect all parts. If a defect or damage is noticed, install new parts.

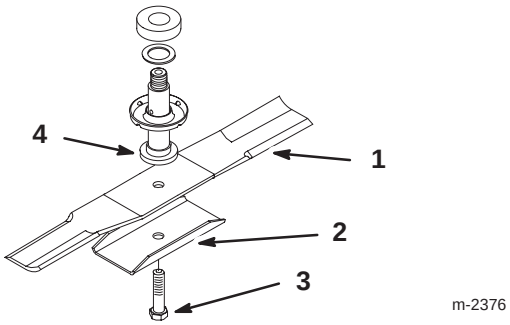

Figure 23

1. Blade
2. Blade stiffener
3. Bolt
4. Spindle

Sharpening the Blade(s)

1. Use a file to sharpen the cutting edge at both ends of the blade (Fig. 24). Maintain the original angle. The blade retains its balance if the same amount of material is removed from both cutting edges.

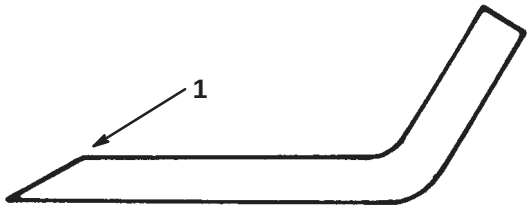

Figure 24

1. Sharpen at original angle

2. Check the balance of the blade by putting it on a blade balancer (Fig. 25). If the blade stays in a horizontal position, the blade is balanced and can be used. If the blade is not balanced, file some metal off the back side of the blade. Repeat this procedure until the blade is balanced.

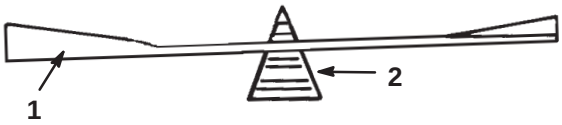

Figure 25

1. Blade
2. Balancer

Installing the Blade(s)

1. Install the blade, blade stiffener and bolt (Fig. 26).

IMPORTANT: The curved part of the blade must be pointing toward the inside of the mower to assure proper cutting.

2. Tighten the bolt to 80-100 ft–lb (109-136 Nm).

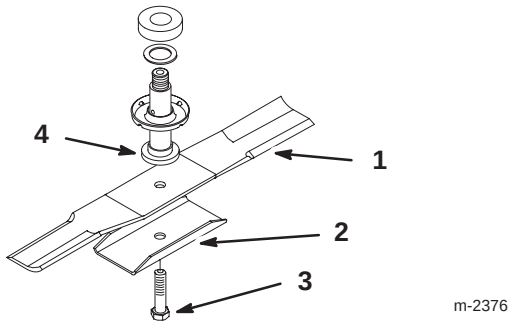

Figure 26

1. Blade
2. Bladt stiffener
3. Bolt
4. Spindle

Greasing and Lubrication

Service Interval/Specification

Grease the mower after every 50 operating hours or once a year, whichever occurs first. Grease more frequently when operating conditions are extremely dusty or sandy.

Grease Type: General-purpose grease.

How to Grease

1. Disengage the power take off (PTO), set the parking brake, and turn the ignition key to “OFF” to stop the engine. Remove the key
2. Clean the grease fittings with a rag. Make sure to scrape any paint off the end of the fitting(s).
3. Connect a grease gun to the fitting. Pump grease into the fittings.
4. Wipe up any excess grease.

Where to Add Grease

1. Lubricate the blade spindles, idler pulley arm and gage wheels (Fig. 27).

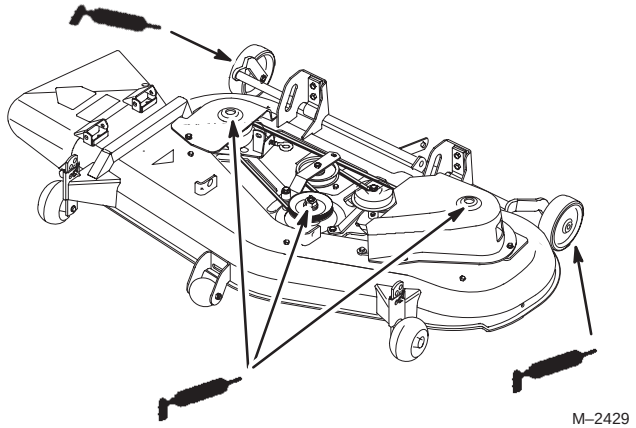

Figure 27

Blade Drive Belt

Removing the Blade Drive Belt

1. Remove the mower; refer to Removing the Mower, page 11.
2. Remove pulley cover mounting screws and pulley covers from both blade pulleys.
3. Loosen idler spring and remove the belt from the pulleys (Fig. 29).

Installing the Blade Drive Belt

1. Install the new belt around the blade pulleys and the idler pulley (Fig. 28).

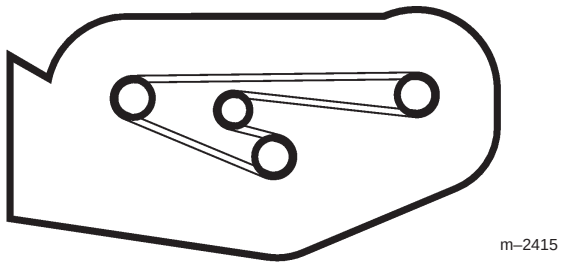

Figure 28

2. Adjust idler spring tension until length between hooks is 5-1/2” (140 mm) (Fig. 29).

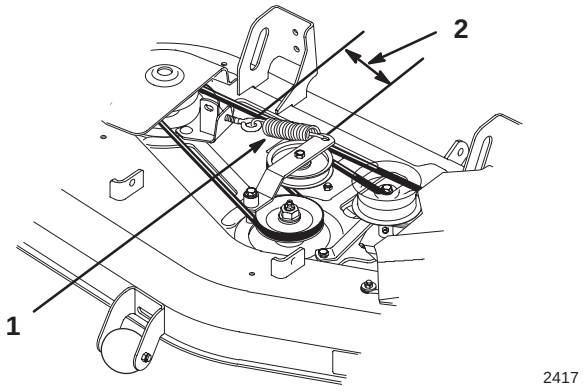

Figure 29

Top View

1. Idler spring
2. 5-1/2” (140 mm)

3. Install left and right pulley covers with previously removed mounting screws.

4. Install the mower; refer to Installing the Mower, page 8.

Power Take Off (PTO) Belt

Removing PTO Belt

1. Remove the mower; refer to Removing the Mower, page 11.

2. Remove left pulley cover mounting screws and pulley cover. Remove PTO belt (Fig. 30).

Installing the PTO Belt

1. Install the new belt around the blade pulley and the idler pulleys.

2. Install left pulley cover with previously removed mounting screws (Fig. 30).

3. Install the mower; refer to Installing the Mower, page 8.

4. Adjust belt guide so distance between belt and guide is 1/8” (4 mm) (Fig. 30).

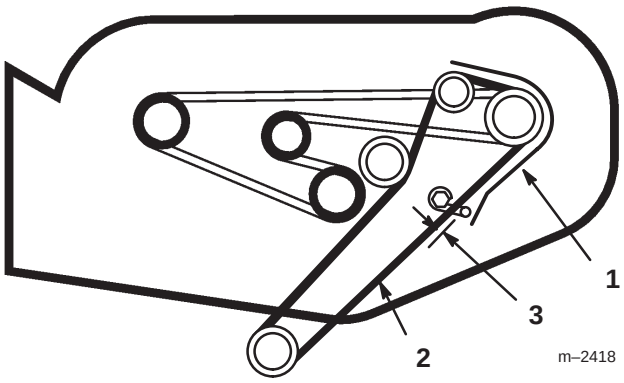

Figure 30

1. Left pully cover
2. PTO belt
3. 1/8” (4 mm)

Washing Underside of Mower

After each use wash the underside of the mower to prevent grass build-up for improved mulch action and clipping dispersal.

1. Park the machine on a hard level surface, disengage the power take off (PTO) and turn the ignition key to “OFF” to stop the engine.

2. Attach hose coupling to the end of the left mower washout fitting, turn water on high (Fig. 31).

   Note: Spread petroleum jelly on washout fitting o-ring to make coupling slide on easier and protect o-ring.

3. Lower the mower to the lowest height-of-cut.

4. Sit on the seat and start the engine. Engage power take off (PTO) and let mower run for one to three minutes.

5. Disengage the blade, power take off (PTO) and turn the ignition key to “OFF” to stop the engine. Wait for all moving parts to stop.

6. Repeat washing with hose attached to right washout fitting.

7. Turn the water off, remove hose coupling from the washout fitting.

Note: If the mower is not clean after one washing, soak and let stand for 30 minutes. Then repeat process again.

8. Run mower again for one to three minutes to remove excess water.

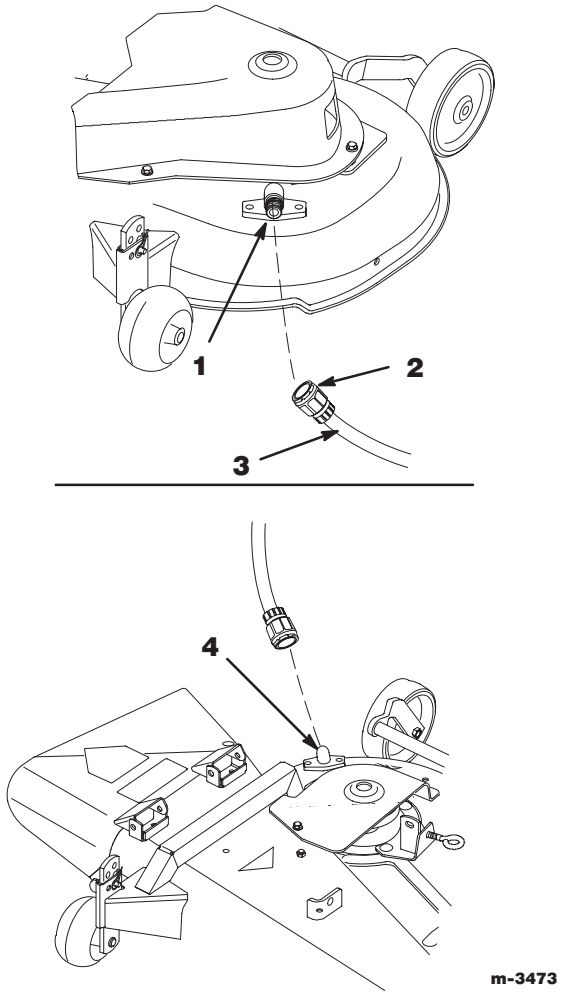

Figure 31

1. Washout fitting left
2. Coupling (not supplied)
3. Hose
4. Washout fitting right

⚠ WARNING

POTENTIAL HAZARD

- **A broken or missing washout fitting could expose you and others to thrown objects or blade contact.**

WHAT CAN HAPPEN

- **Contact with thrown debris or blade contact will cause injury or death.**

HOW TO AVOID THE HAZARD

- **Replace broken or missing washout fitting immediately, before using mower again.**
- **Plug any hole(s) in mower with bolts and locknuts.**
- **Never put your hands or feet under the mower or through openings in the mower.**

Storage

1. Clean dirt and chaff from the outside of the engine's cylinder head fins and blower housing. Also remove grass clippings, dirt, and grime from the external parts of the entire machine, especially the engine, shrouding, and the top of the mower.

   IMPORTANT: You can wash the machine with mild detergent and water. Do not pressure wash the machine. Avoid excessive use of water, especially near the control panel, lights, engine, and the battery.

2. Wash the underside of the mower; refer to Washing Underside of Mower, page 20.

3. Check the condition of the blade(s); refer to Cutting Blade, page 17.

4. Check the condition of the blade drive belt.

5. Grease the mower deck; refer to Greasing and Lubrication, page 19.

6. Check and tighten all bolts, nuts, and screws. Repair or replace any part that is damaged or defective.

7. Paint all scratched or bare metal surfaces. Paint is available from your Authorized Service Dealer.

8. Store the machine in a clean, dry garage or storage area. Remove the key from the ignition switch and keep it in a memorable place. Cover the machine to protect it and keep it clean.

Troubleshooting

PROBLEM	POSSIBLE CAUSES	CORRECTIVE ACTION
Abnormal vibration.	1. Cutting blade(s) is bent or unbalanced.	1. Install new cutting blade(s).
	2. Blade mounting bolt is loose.	2. Tighten blade mounting bolt.
	3. Engine mounting bolts are loose.	3. Tighten engine mounting bolts.
	4. Loose engine pulley, idler pulley, or blade pulley.	4. Tighten the appropriate pulley.
	5. Engine pulley is damaged.	5. Contact Authorized Service Dealer.
Blade(s) does not rotate.	1. Blade drive belt is worn, loose or broken.	1. Install new blade drive belt.
	2. Blade drive belt is off pulley.	2. Install blade drive belt and check idler pulley and belt guides for correct position.
	3. PTO belt is worn, loose or broken.	3. Install new PTO belt.
Uneven cutting height.	1. Tire pressure is incorrect.	1. Set tire pressure.
	2. Mower is not level.	2. Level mower from side-to-side and front-to-rear.
	3. Underside of mower is dirty.	3. Clean the underside of the mower.


TORO®