Form No. 3441-761 Rev B

TORO®

Count on it.

Parts Catalog

Groundsmaster® 1200 Series

Pull Behind Rotary Mower

Model No. 31905—Serial No. 407700000 and Up

Register at www.Toro.com.
Original Instructions (EN)

CE

3441-761 B

Ordering Replacement Parts

To order replacement parts, please supply the part number, the quantity, and the description of each part desired.

Understanding Reference Numbers

Each identified part in an illustration has a reference number. The reference number for a part also appears in the parts list, along with other information about the part.

This catalog uses two special reference number formats, one to indicate parts in a service assembly and another to indicate the quantity of a given part in an illustration.

Service Assembly Reference Numbers

Parts in service assemblies have reference numbers in the form a:b. The a represents the reference number of the entire service assembly and the b represents a sequential number unique to each part within the service assembly.

For example, a wheel assembly might be identified by reference number 6, the tire by 6:1, the valve by 6:2, and the wheel by 6:3. When you order the assembly identified by reference number 6, you receive all parts identified by reference numbers 6:1,6:2, and 6:3. However, you may also order any part individually. Reference numbers of this type appear in illustration and in parts lists.

Reference Numbers Indicating Quantity

In an illustration, if a reference number indicates more than one part, the reference number has the form nX y. The n represents the quantity of the part, the X is the multiplication symbol, and the y represents the reference number.

For example, in an illustration, the reference number 2X 37 means that two of the parts identified by reference number 37 are indicated.

Contents

Frame Assembly 4
Lift Arm Assembly No. 2 6
Impact Damper Assembly No. 138-5299 8
Lift Arm Assembly No. 3 10
Lift Arm Assembly No. 1 12
Tire and Axle Assembly 14
LH Torsion Axle Assembly No. 137-3572 16
RH Torsion Axle Assembly No. 137-3573 18
Gearbox and Driveshaft Assembly 20
Main Driveshaft Assembly No. 138-9039 22
Rear Driveshaft Assembly No. 138-9040 24
Side Driveshaft Assembly No. 138-9041 26
Deck Mount and Deck Cover Assembly 28
Hydraulic Assembly 30
Blade, Pulley and Spindle Assembly 32
Deck Assembly No. 138-9026 34
Double Spindle Assembly No. 139-3175 36
High Spindle Assembly No. 139-3176 38
Low Spindle Assembly No. 139-3177 40
Deck Mount and Deck Cover Assembly 42
Attachments and Accessories 44

© 2021—The Toro® Company
8111 Lyndale Avenue South
Bloomington, MN 55420

Contact us at www.Toro.com.
Printed in the USA.
All Rights Reserved

Frame Assembly

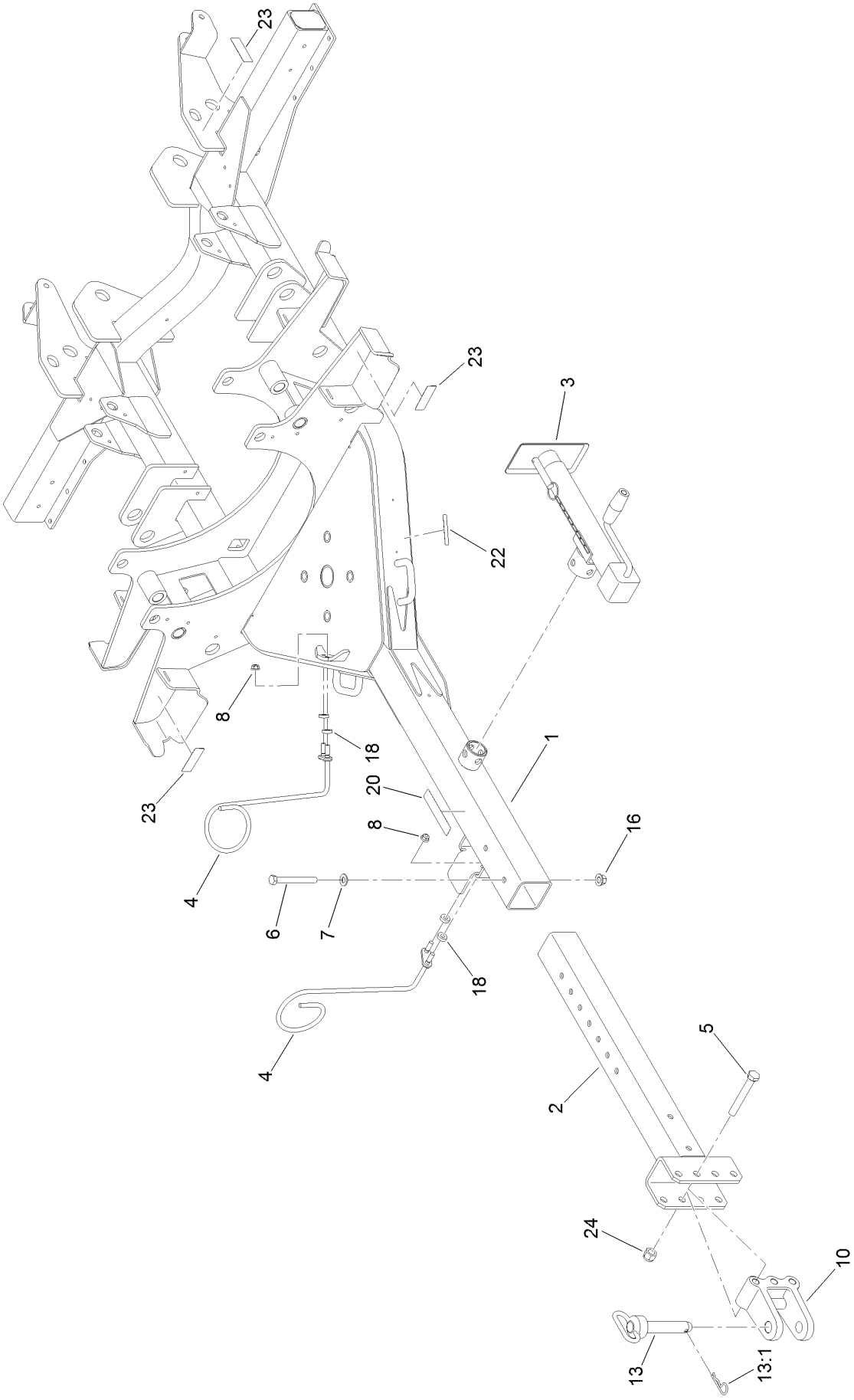

Frame Assembly (continued)

Ref.	Part Number	Qty.	Description
1	137-3501-01	1	Frame
2	140-7008-01	1	Hitch
3	T0000-3423	1	Jack-Sidewind
4	139-5995	2	Guide-Hose, RH
5	AU426-1072	2	Bolt
6	325-18	2	Screw-HH
7	3256-26	2	Washer-Flat
8	104-8301	4	Nut-HF, NI
10	140-7011SP	1	Clevis-Hitch

Ref.	Part Number	Qty.	Description
13	140-7025	1	Pin-Hitch
13:1	3290-343	1	Pin-Hair
16	99-5107	2	Nut-Lock
18	5-0652	4	Spacer
20	110-4668	1	Decal-Warning, PTO
22	133-8061	1	Decal-Warning
23	120-0625	4	Decal-Warning
24	3296-53	2	Nut-Lock, NI

Lift Arm Assembly No. 2

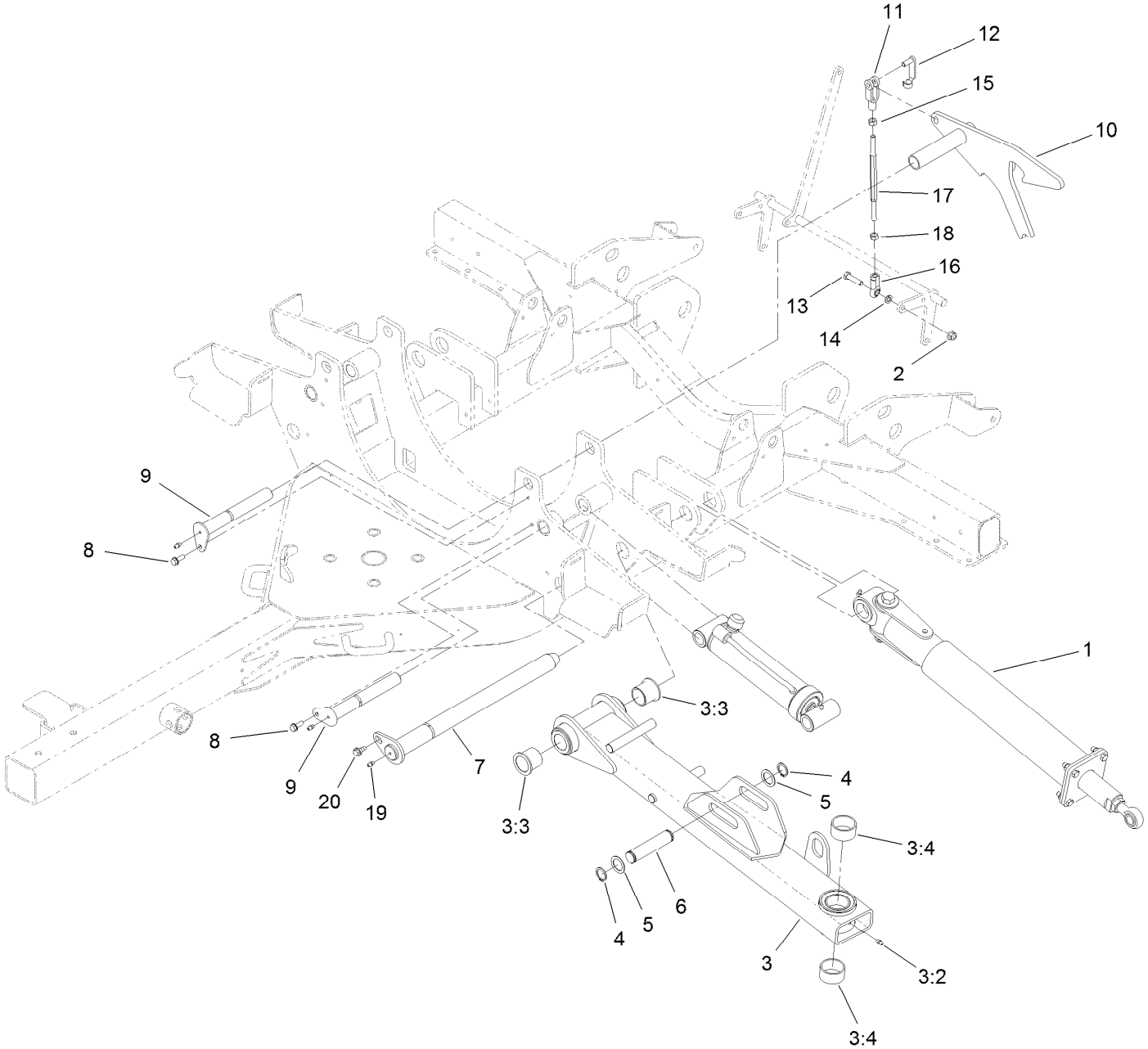

Lift Arm Assembly No. 2 (continued)

Ref.	Part Number	Qty.	Description
1	138-5299	1	Damper-Impact, ASM
2	104-8301	1	Nut-HF, NI
3	137-3562	1	No. 2 Lift Arm ASM
3:2	302-5	1	Fitting-Grease
3:3	69-6470	2	Bushing-Caster
3:4	114-5596	2	Bushing-Straight
4	32151-36	2	Ring-Retaining
5	10-8110	2	Washer-Thrust
6	138-5272	1	Pin-Cylinder
7	137-3604	1	Pin-Arm, Lift
8	32144-41	2	Screw-Taptite
9	138-6330	2	Cylinder Pin ASM
10	140-0041	1	Latch-Wing, LH
11	1-633131	1	Yoke-Linkage, Brake
12	103-2399	1	Pin-Spring, Clevis
13	323-8	1	Screw-HH
14	3253-21	1	Washer-Lock
15	3219-3	1	Nut-Hex
16	103-1167	1	Joint-Ball End, LH
17	137-3692	1	Rod-Adjuster, Wing
18	3219-20	1	Nut-Hex, LH
19	302-5	1	Fitting-Grease
20	99-5105	1	Screw-Shoulder

Impact Damper Assembly No. 138-5299

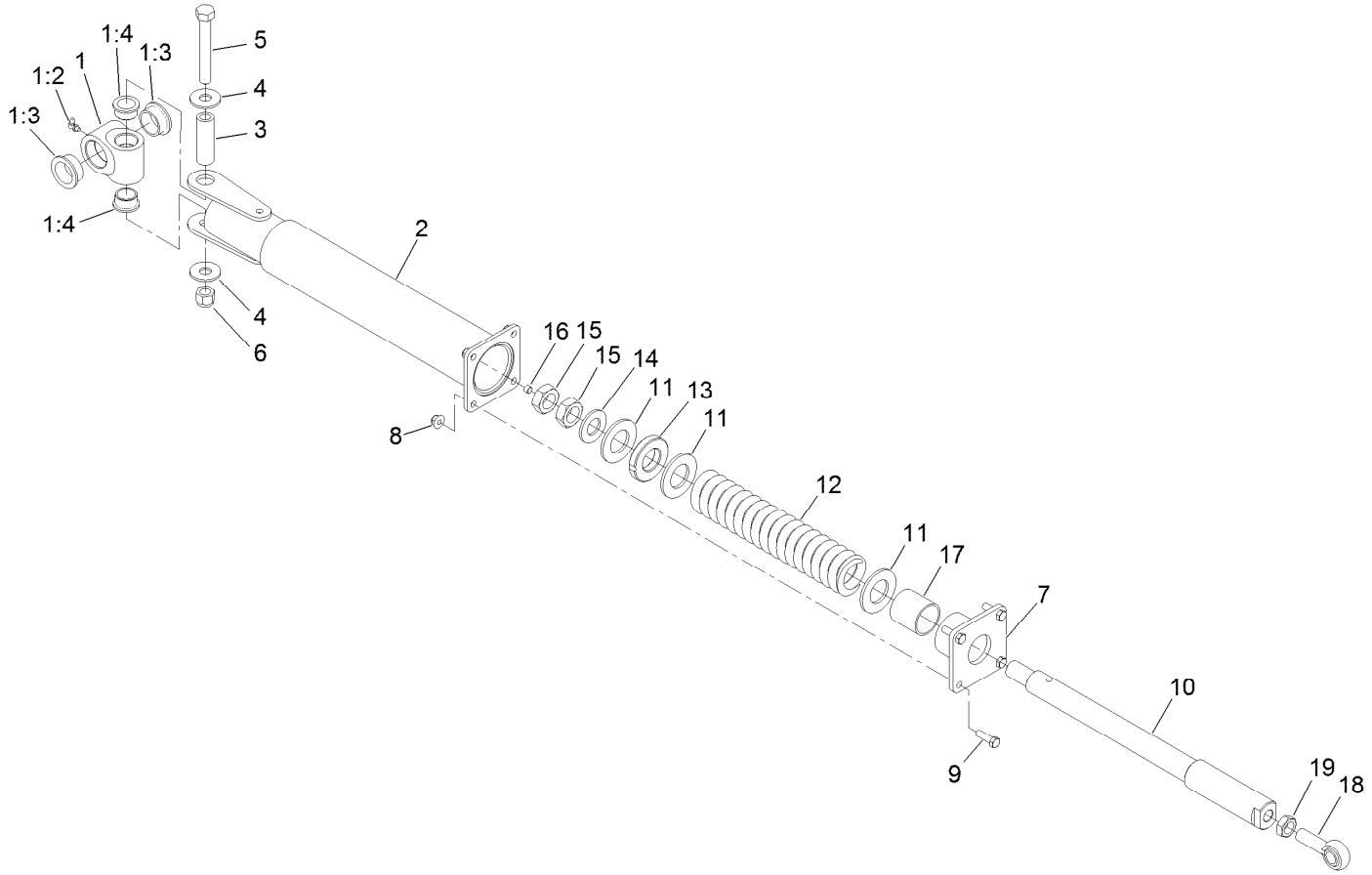

Impact Damper Assembly No. 138-5299 (continued)

Ref.	Part Number	Qty.	Description
1		1	Pivot Hub ASM ●
1:2	302-60	1	Fitting-Grease
1:3	115-5469	2	Bushing-Flange
1:4	114-5680	2	Bushing-Flange
2	138-5257	1	Arm-Impact, Rear
3	94-6604	1	Tube-Spacer
4	3256-7	2	Washer-Flat
5	327-23	1	Screw-HH
6	3296-53	1	Nut-Lock, NI
7	138-5250	1	Housing ASM
8	104-8301	4	Nut-HF, NI
9	323-7	4	Screw-HH
10	138-5266	1	Shaft-Spring
11	114-5986	3	Washer-Plain
12	114-5993	1	Spring-Compression
13	114-5992	1	Bearing-Plastic
14	3256-62	1	Washer-Flat
15	3220-9	2	Nut-Jam
16	285-17	1	Plug-Pipe
17	114-5989	1	Bushing-Plain
18	105-2806	1	End-Rod
19	3220-7	1	Nut-Jam

● Not serviced separately

Lift Arm Assembly No. 3

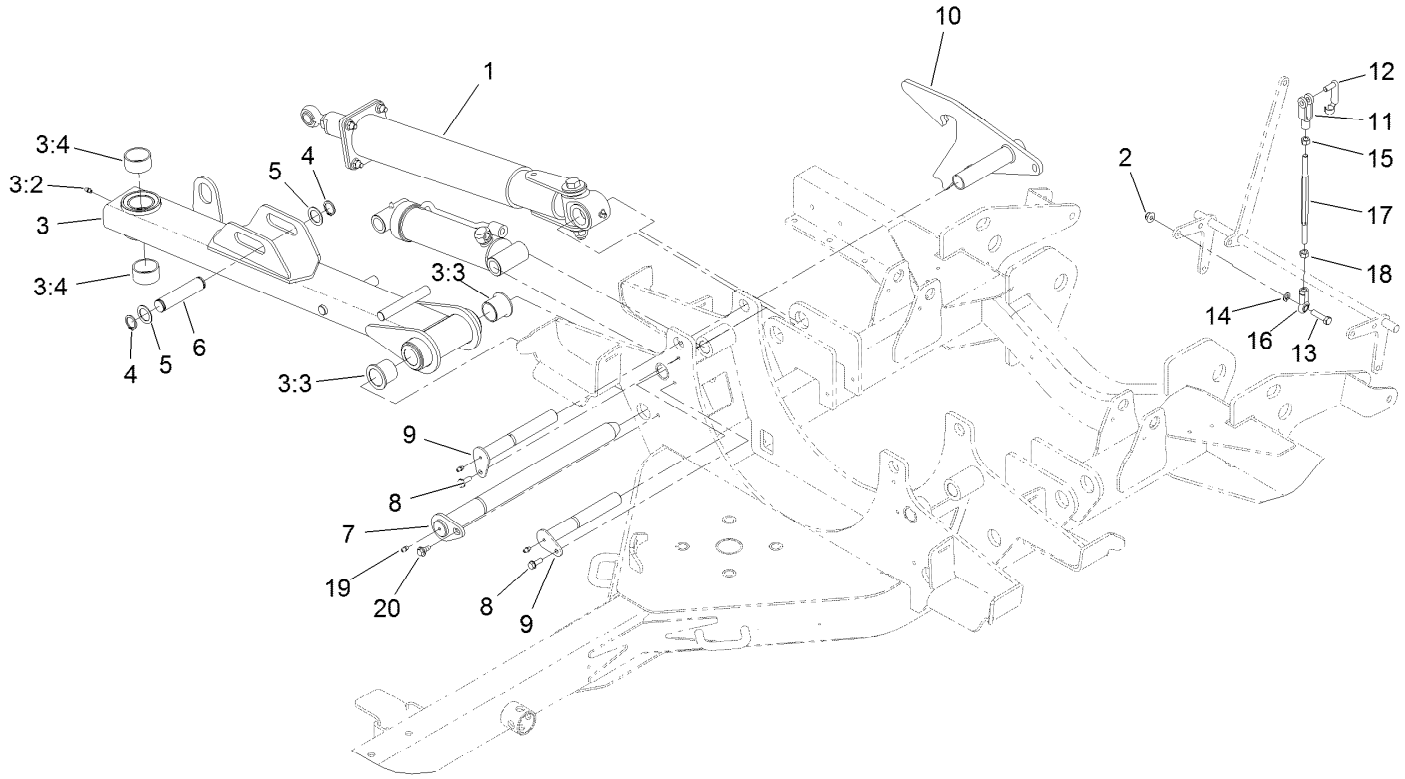

Lift Arm Assembly No. 3 (continued)

Ref.	Part Number	Qty.	Description
1	138-5299	1	Damper-Impact, ASM
2	104-8301	1	Nut-HF, NI
3	137-3563	1	No. 3 Lift Arm ASM
3:2	302-5	1	Fitting-Grease
3:3	69-6470	2	Bushing-Caster
3:4	114-5596	2	Bushing-Straight
4	32151-36	2	Ring-Retaining
5	10-8110	2	Washer-Thrust
6	138-5272	1	Pin-Cylinder
7	137-3604	1	Pin-Arm, Lift
8	32144-41	2	Screw-Taptite
9	138-6330	2	Cylinder Pin ASM
10	140-0042	1	Latch-Wing, RH
11	1-633131	1	Yoke-Linkage, Brake
12	103-2399	1	Pin-Spring, Clevis
13	323-8	1	Screw-HH
14	3253-21	1	Washer-Lock
15	3219-3	1	Nut-Hex
16	103-1167	1	Joint-Ball End, LH
17	137-3692	1	Rod-Adjuster, Wing
18	3219-20	1	Nut-Hex, LH
19	302-5	1	Fitting-Grease
20	99-5105	1	Screw-Shoulder

Lift Arm Assembly No. 1

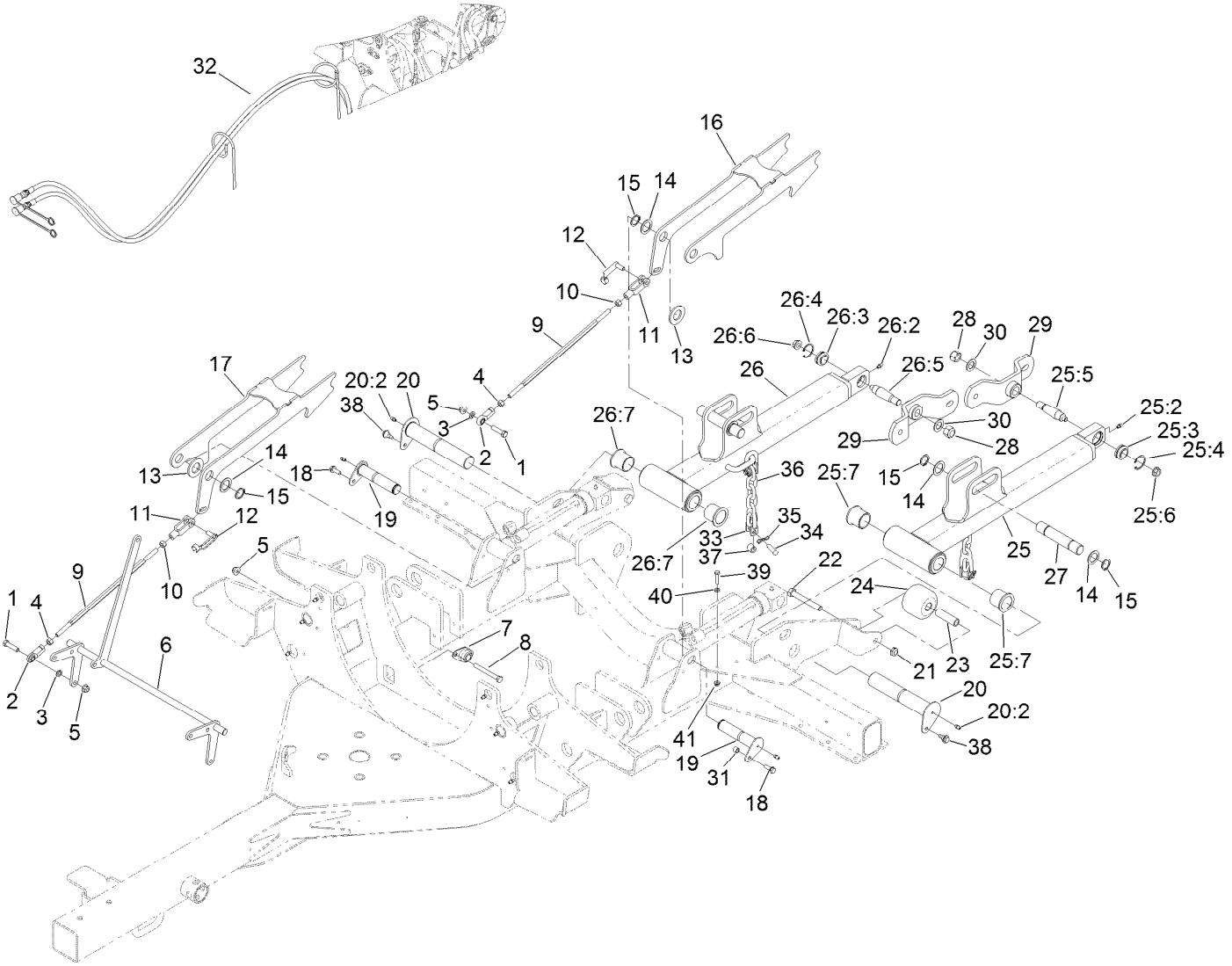

Lift Arm Assembly No. 1 (continued)

Ref.	Part Number	Qty.	Description
1	323-8	2	Screw-HH
2	103-1167	2	Joint-Ball End, LH
3	3253-21	2	Washer-Lock
4	3219-20	2	Nut-Hex, LH
5	104-8301	6	Nut-HF, NI
6	137-3688-03	1	Latch Shaft ASM
7	256-236	2	Bearing-Mount, Flange
8	323-20	4	Screw-HH
9	137-3691	2	Rod-Adjuster, Rear
10	3219-3	2	Nut-Hex
11	1-633131	2	Yoke-Linkage, Brake
12	103-2399	2	Pin-Spring, Clevis
13	3256-62	2	Washer-Flat
14	10-8110	6	Washer-Thrust
15	32151-36	6	Ring-Retaining
16	140-0007	1	LH Rear Latch ASM
17	140-0008	1	RH Rear Latch ASM
18	32144-41	2	Screw-Taptite
19	138-6331	2	Lift Arm Pin ASM
20	138-6332	2	Lift Arm Pin ASM
20:2	302-5	1	Fitting-Grease
21	3296-45	2	Nut-Hex
22	325-15	2	Screw-HH
23	115-2144	2	Tube-Spacer
24	115-3366	2	Roller
25	137-3561	1	No. 1 Lift Arm LH ASM
25:2	302-5	1	Fitting-Grease
25:3	105-7441	1	Bearing-Spherical
25:4	32151-34	1	Ring-Retaining
25:5	105-7468	1	Stud-Tapered
25:6	32128-42	1	Nut-HF
25:7	69-6470	2	Bushing-Caster
26	137-3584	1	No. 1 Lift Arm RH ASM
26:2	302-5	1	Fitting-Grease
26:3	105-7441	1	Bearing-Spherical
26:4	32151-34	1	Ring-Retaining
26:5	105-7468	1	Stud-Tapered
26:6	32128-42	1	Nut-HF
26:7	69-6470	2	Bushing-Caster
27	137-3617	2	Pin-Cylinder
28	3296-41	2	Nut-Lock NI
29	137-3581-01	2	Hub Support ASM
30	86-1440	2	Washer-Flat
31	105-5723	2	Spacer-Tube
32	20-9580	1	Rope-Latch
33	5-2942	4	Shackle
34	283-42	4	Pin-Clevis
35	119-1415	4	Pin-Cotter, Locking
36	138-5274	2	Chain-6 Link
37	75-5270	2	Spacer-Knob, Seat
38	99-5105	2	Screw-Shoulder
39	114-0282	2	Screw-HH
40	3218-1	2	Nut-Jam
41	104-7201	2	Nut-HF, NI

Tire and Axle Assembly

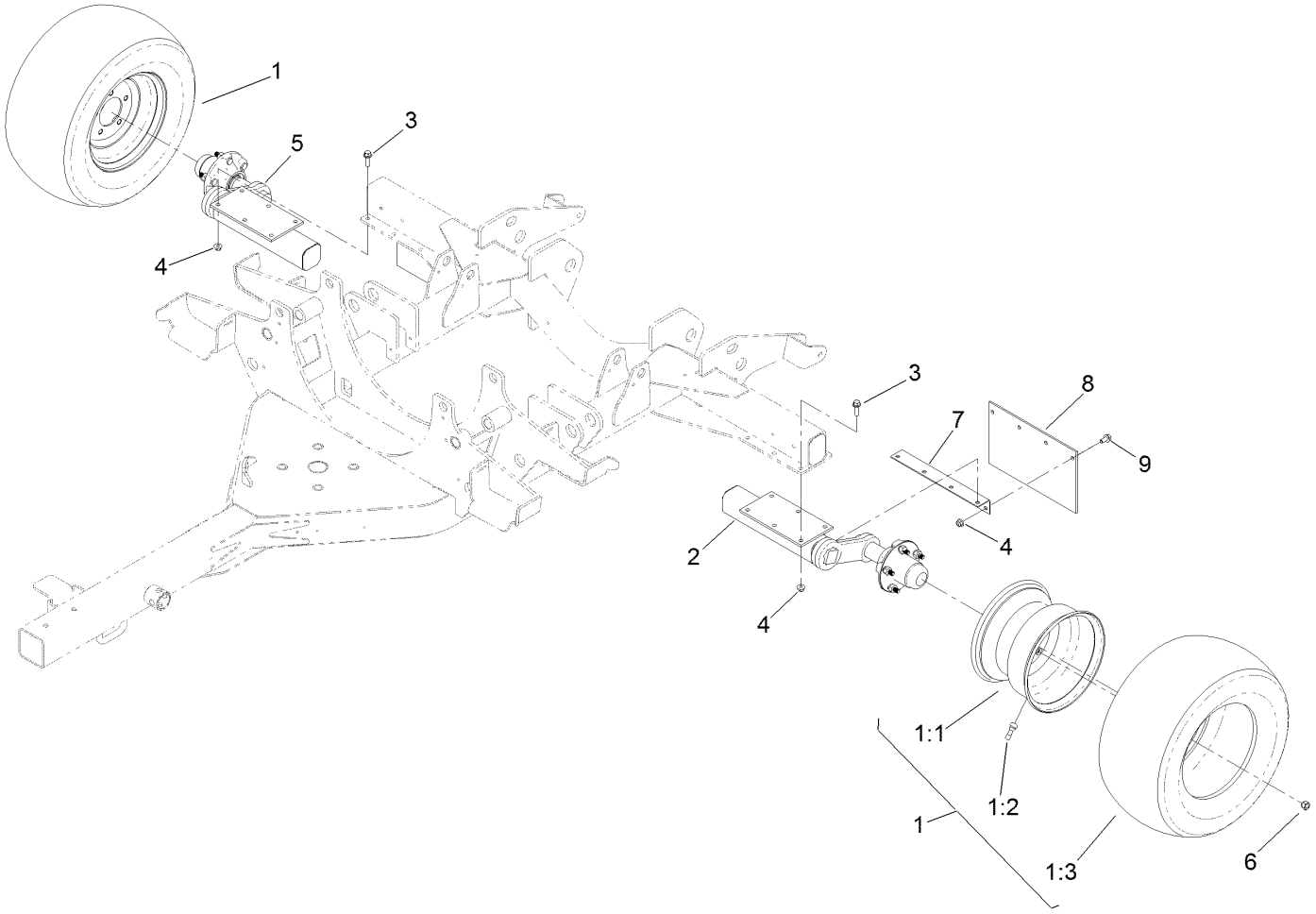

Tire and Axle Assembly (continued)

Ref.	Part Number	Qty.	Description
1	137-3571	2	Tire ASM
1:1	115-1573	1	Rim
1:2	232-27	1	Stem-Valve
1:3	120-8910	1	Tire-Off Road
2	137-3572	1	LH Torsion Axle ASM
3	3234-24	12	Screw-HHF
4	104-8301	20	Nut-HF, NI
5	137-3573	1	RH Torsion Axle ASM
6	242-35	10	Nut-Wheel
7	138-9006-03	2	Bracket-Flap
8	138-9007	2	Flap-Rubber
9	3234-1	8	Screw-HHF

LH Torsion Axle Assembly No. 137-3572

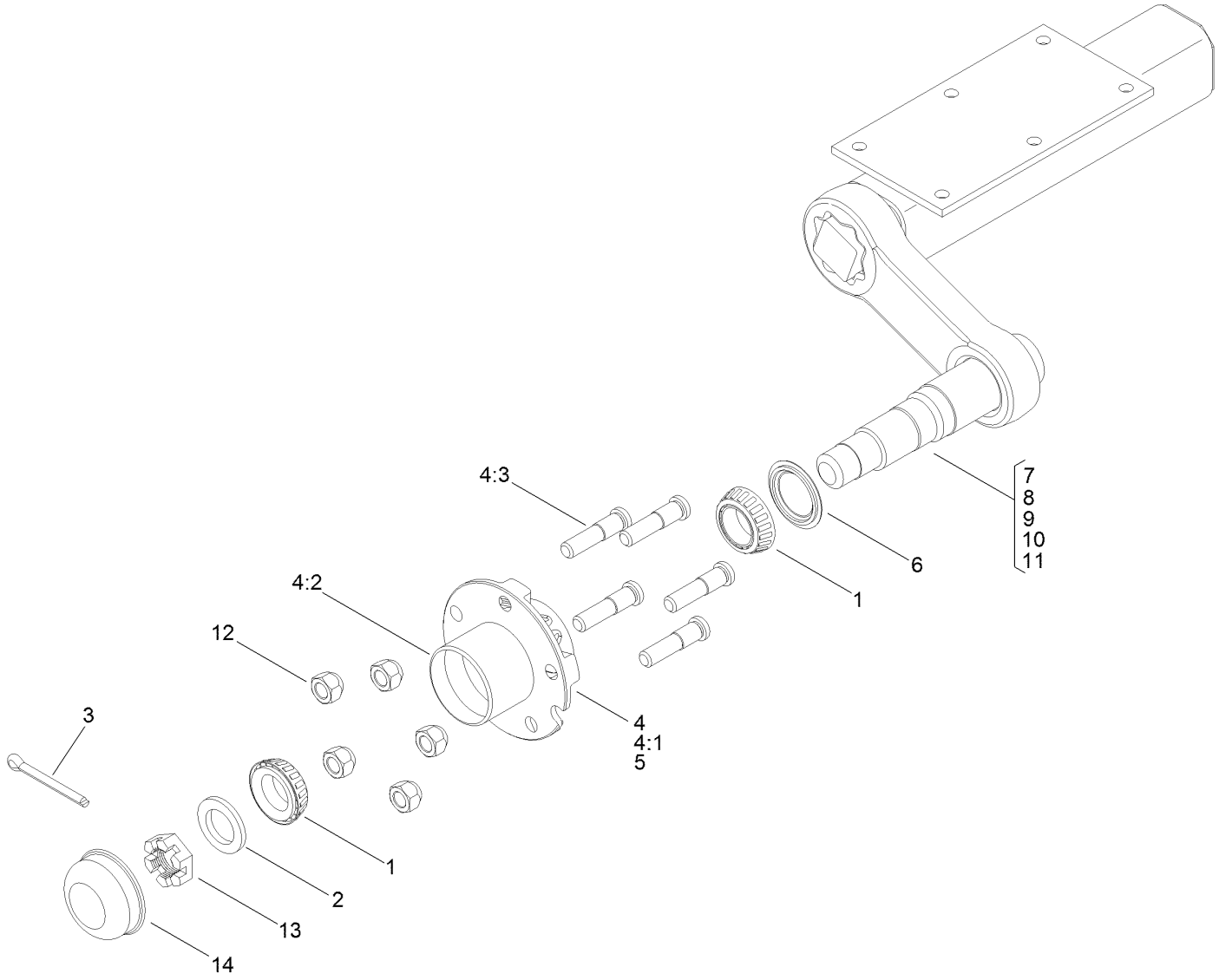

LH Torsion Axle Assembly No. 137-3572 (continued)

Ref.	Part Number	Qty.	Description
1	254-62	2	Bearing-Roller, Cone
2	137-3596	1	Washer-Spindle
3	3272-18	1	Pin-Cotter
4	119-6001	1	Hub ASM
4:1		1	Hub ●
4:2	115-9471	2	Bearing-Cup
4:3	69-2990	5	Stud-Wheel
5		1	Grease ●
6	137-3595	1	Seal
7		1	Tube And Bracket ASM ●
8		4	Cord-Rubber ●
9		1	Sticker-Rubber, Torsion ●
10		1	Sticker-Axle, Serial Tag ●
11		1	Idler ●
12	242-35	5	Nut-Wheel
13	119-6005	1	Nut-Slotted, Hex
14	119-6004	1	Cap-Dust

● Not serviced separately

RH Torsion Axle Assembly No. 137-3573

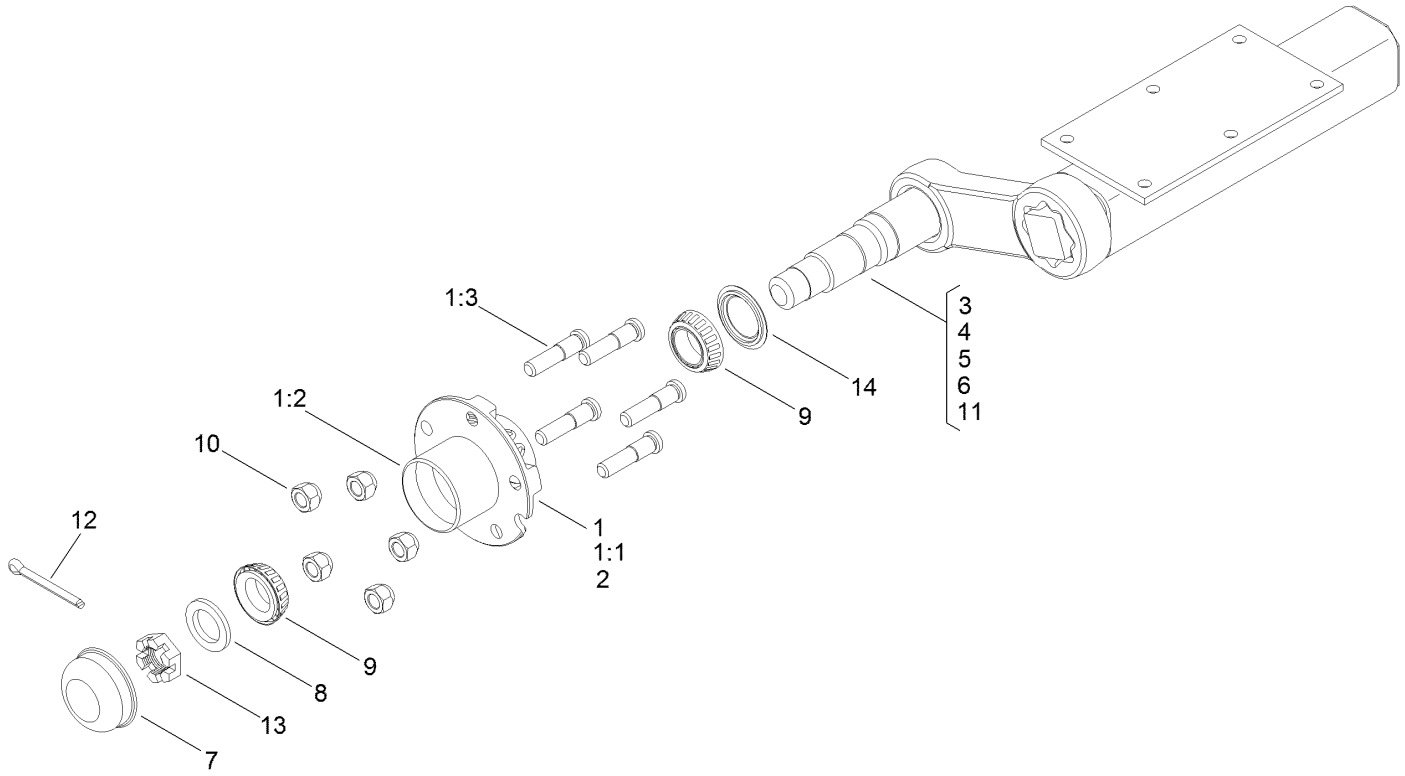

RH Torsion Axle Assembly No. 137-3573 (continued)

Ref.	Part Number	Qty.	Description
1	119-6001	1	Hub ASM
1:1		1	Hub ●
1:2	115-9471	2	Bearing-Cup
1:3	69-2990	5	Stud-Wheel
2		1	Grease ●
3		1	Sticker-Axle, Serial Tag ●
4		1	Tube And Bracket ASM ●
5		4	Cord-Rubber ●
6		1	Sticker-Rubber, Torsion ●
7	119-6004	1	Cap-Dust
8	137-3596	1	Washer-Spindle
9	254-62	2	Bearing-Roller, Cone
10	242-35	5	Nut-Wheel
11		1	Idler ●
12	3272-18	1	Pin-Cotter
13	119-6005	1	Nut-Slotted, Hex
14	137-3595	1	Seal

● Not serviced separately

Gearbox and Driveshaft Assembly

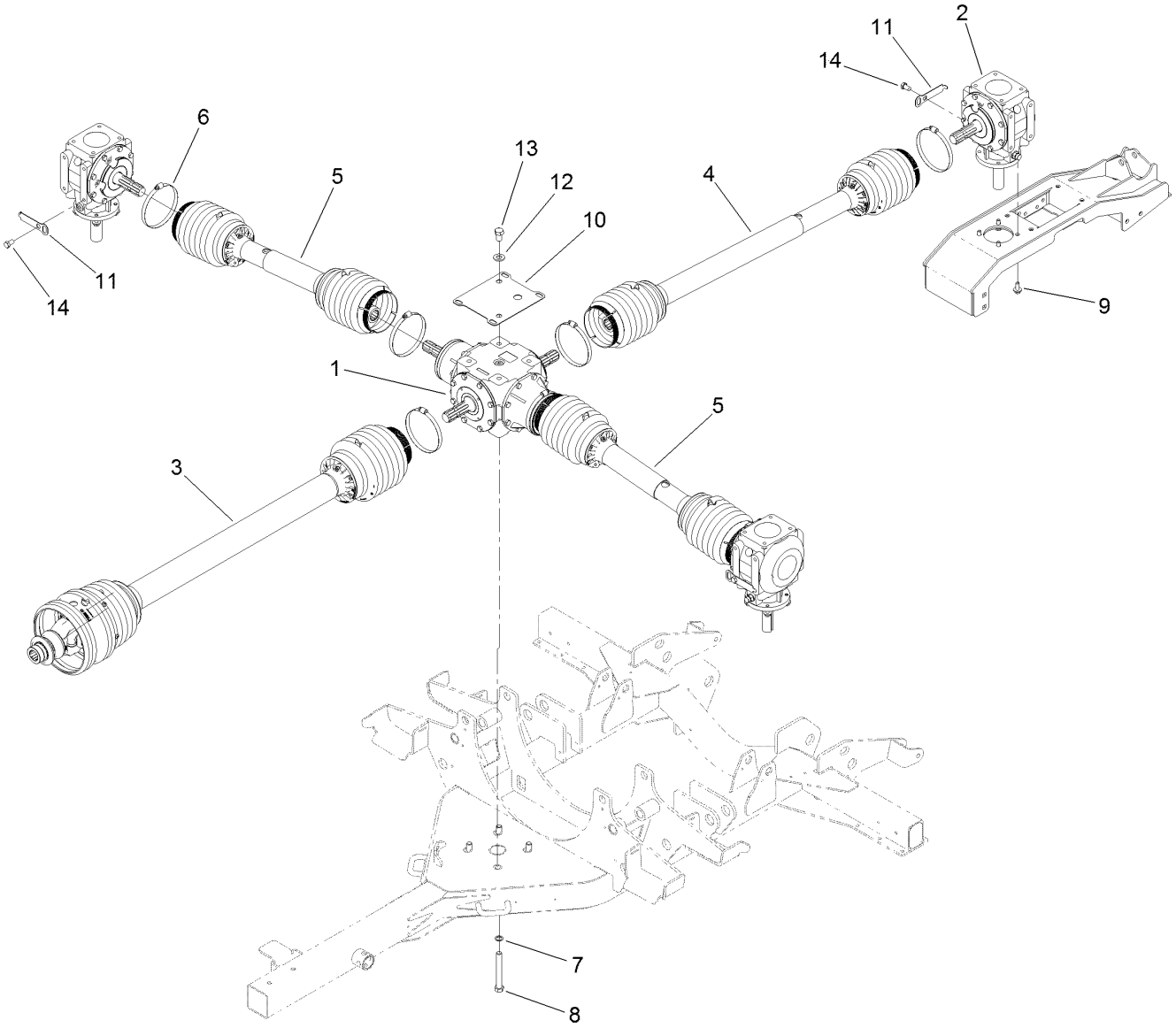

Gearbox and Driveshaft Assembly (continued)

Ref.	Part Number	Qty.	Description
1	139-3154	1	Gearbox-Center
2	139-3153	3	Gearbox-Deck
3	138-9039	1	Driveshaft-Main
4	138-9040	1	Driveshaft-Rear
5	138-9041	1	Driveshaft-Side
6	138-9005	7	Clamp-Hose
7	3256-69	4	Washer-Flat
8	327-11	4	Screw-HH
9	33106-025	12	Screw-HHF
10	138-9011-03	1	Tab-Anti Rotation
11	139-3172-03	3	Plate-Chain
12	AUH426809	2	Washer-Flat
13	327-2	2	Screw-HH
14	33116-020	3	Screw-HH
99	138-9038	4	Decal-Danger, Entanglement ●

● Not illustrated

Main Driveshaft Assembly No. 138-9039

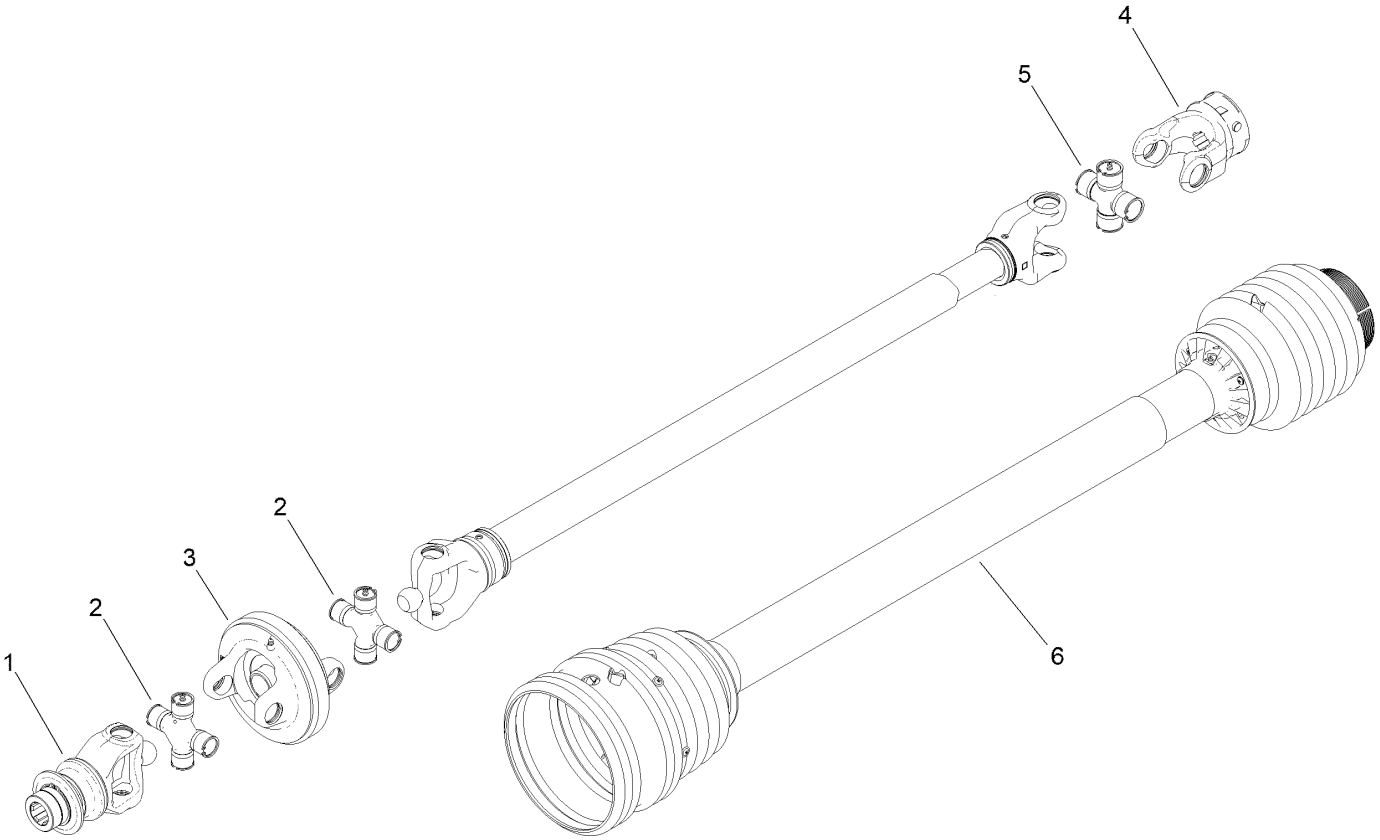

Main Driveshaft Assembly No. 138-9039 (continued)

Ref.	Part Number	Qty.	Description
1	138-9045	1	Yoke-Cv
2	138-9043	2	Cv Cross Kit
3	138-9046	1	Body-Cv
4	138-9047	1	Yoke
5	138-9044	1	Cross Kit
6	138-9042	1	Shield-Shaft, Main
99	119-3113	2	Chain-Safety ●

● Not illustrated

Rear Driveshaft Assembly No. 138-9040

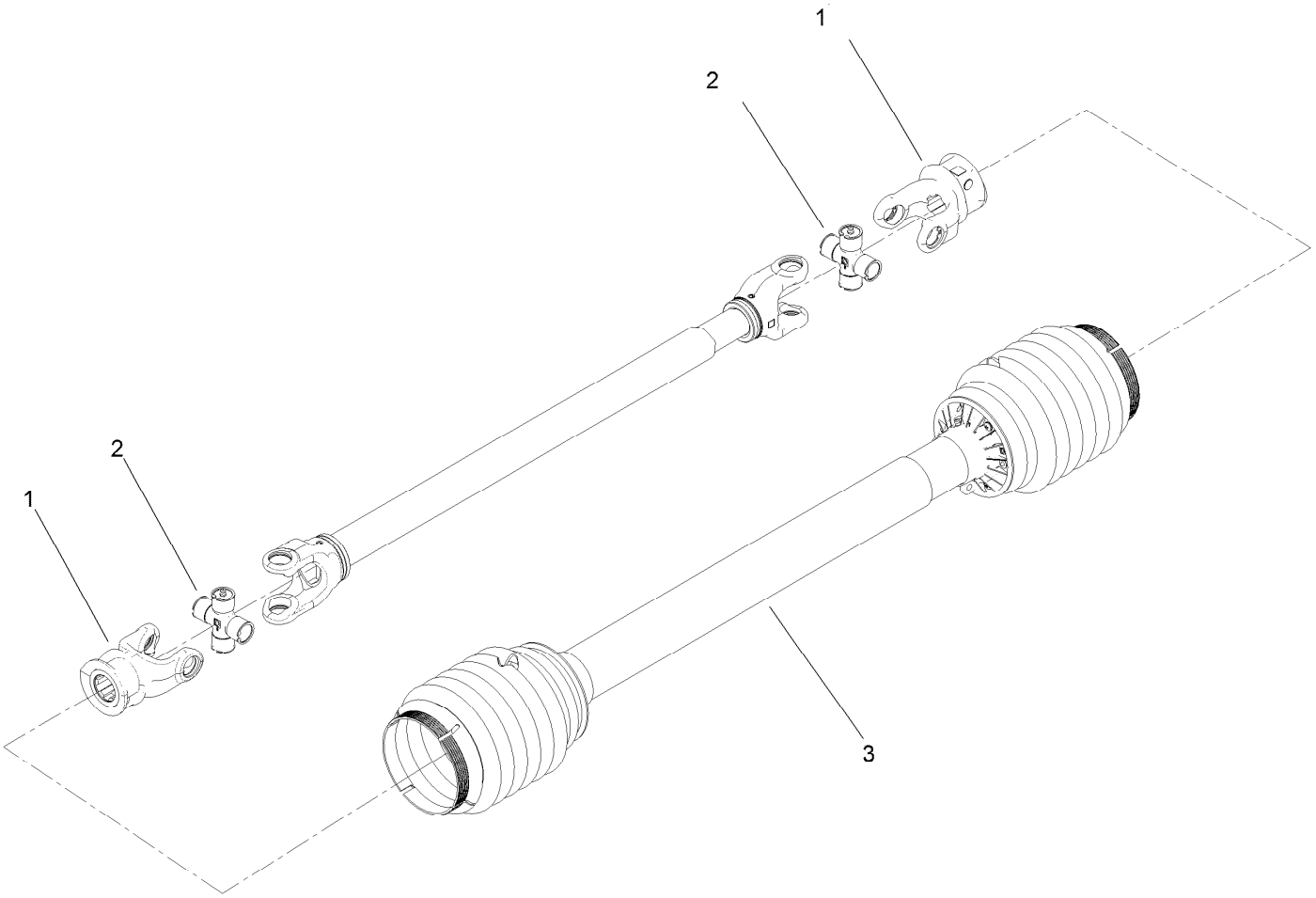

Rear Driveshaft Assembly No. 138-9040 (continued)

Ref.	Part Number	Qty.	Description
1	139-3150	2	Yoke
2	138-9049	2	Cross Kit
3	139-3151	1	Shield-Shaft, Rear
99	119-3113	2	Chain-Safety ●

● Not illustrated

Side Driveshaft Assembly No. 138-9041

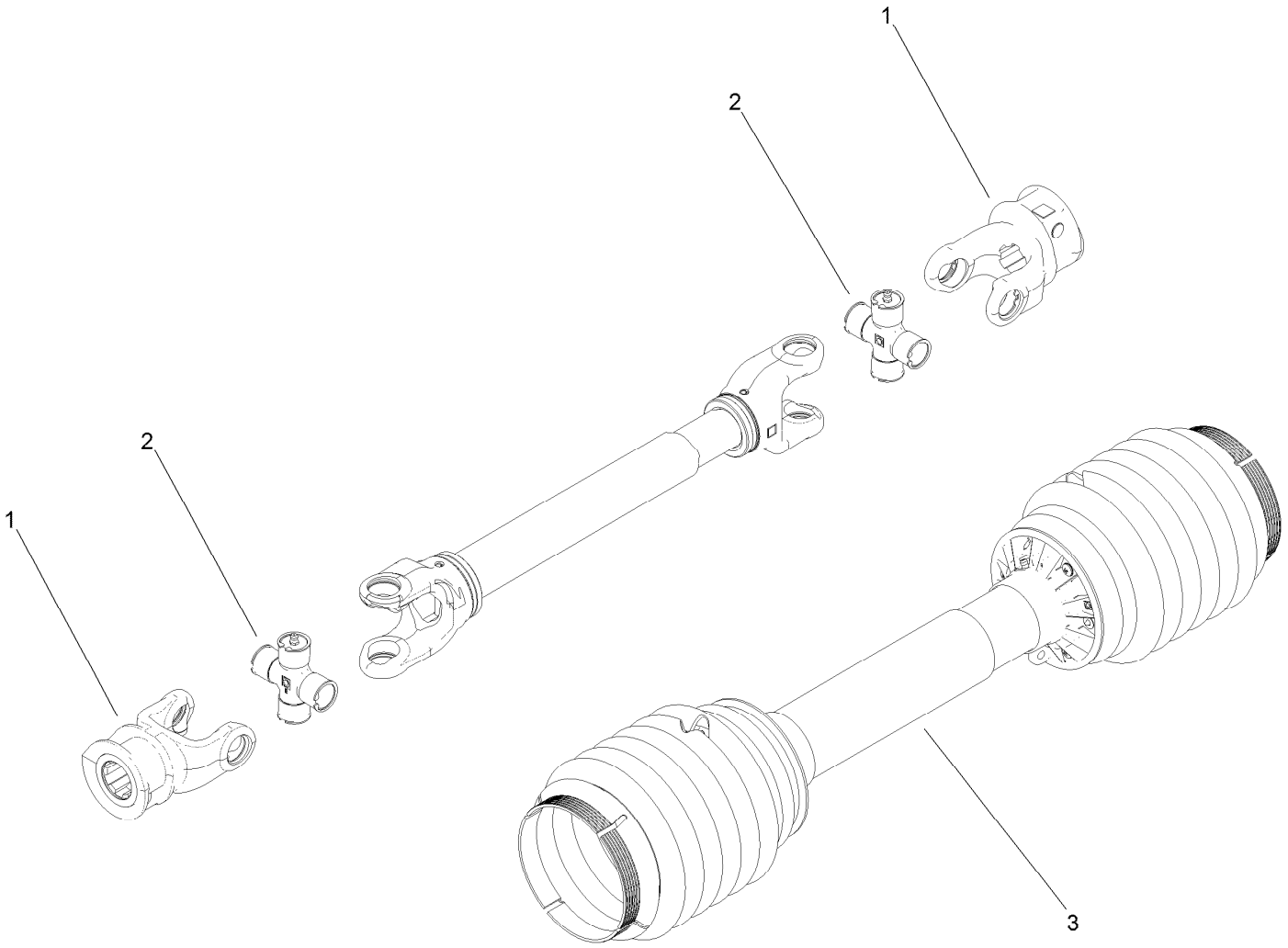

Side Driveshaft Assembly No. 138-9041 (continued)

Ref.	Part Number	Qty.	Description
1	139-3150	2	Yoke
2	138-9049	2	Cross Kit
3	139-3152	1	Shield-Shaft, Side
99	119-3113	2	Chain-Safety ●

● Not illustrated

Deck Mount and Deck Cover Assembly

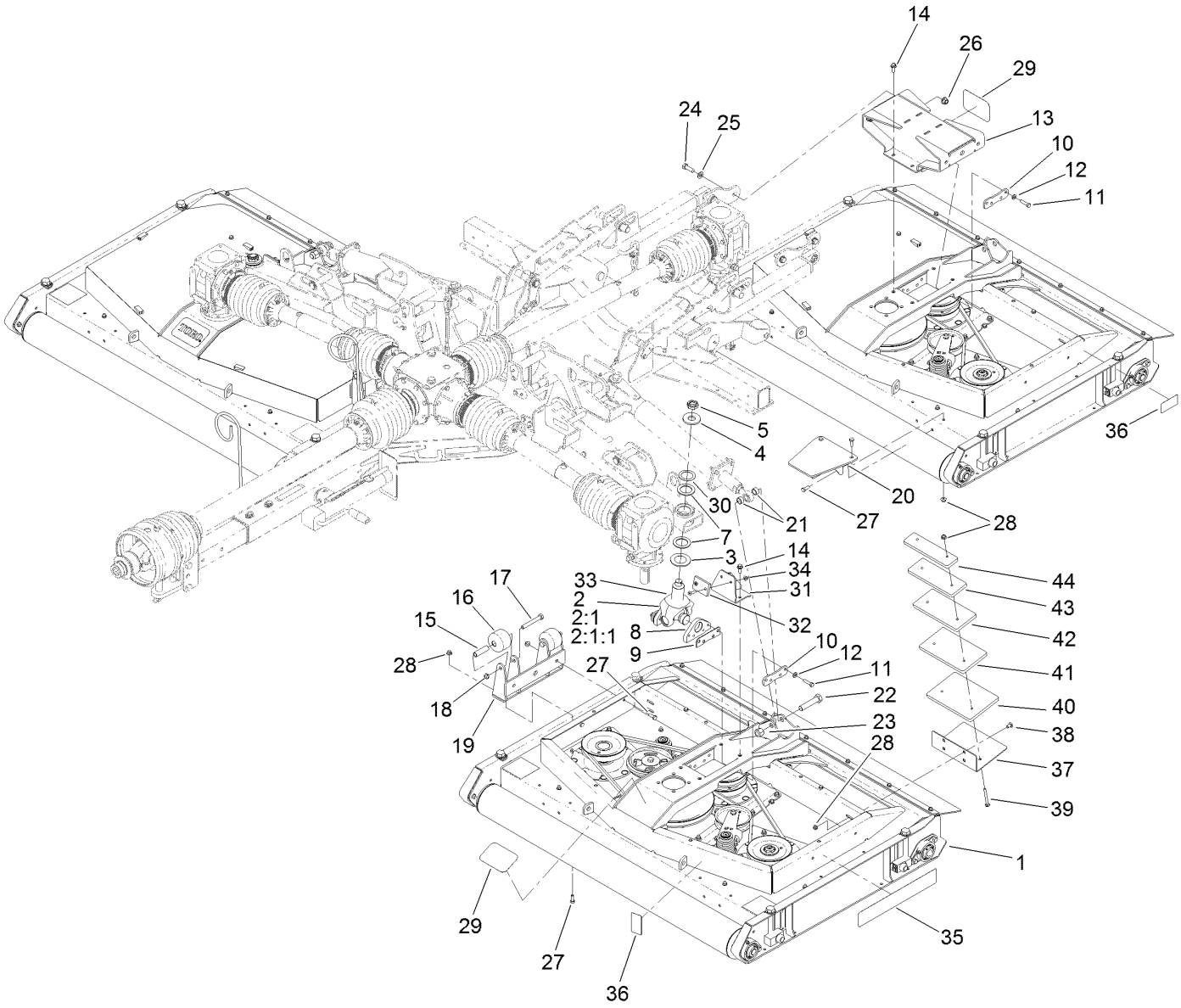

Deck Mount and Deck Cover Assembly (continued)

Ref.	Part Number	Qty.	Description
1		3	Deck ASM ●
2	114-5640-03	2	Joint Yoke ASM
2:1		1	Yoke-Joint ●
2:1:1	104-4299	1	Cross And Bearing Kit
3	104-0720	2	Spacer
4	104-0719	2	Washer-Hardened
5	116-1399	2	Locknut
7	104-0721	4	Washer-Thrust
8	140-0020-03	4	Mount-Base
9	104-0731	4	Shim
10	139-3161	6	Plate-Spacer
11	323-43	20	Screw-HH
12	100-4852	20	Washer-Hardened
13	137-3675-03	1	Mount-Deck
14	3234-42	8	Screw-HHF
15	115-2144	4	Tube-Spacer
16	115-3366	4	Roller
17	325-15	4	Screw-HH
18	3296-45	4	Nut-Hex
19	140-0009-01	2	Roller-Kicker
20	137-3696-01	2	Plate-Kicker
21	74-3730	4	Spacer-Spindle, Rear
22	328-5	2	Screw-HH
23	3296-51	2	Nut-Lock, NI
24	325-6	4	Screw-HH
25	3256-26	4	Washer-Flat
26	99-5107	4	Nut-Lock
27	323-6	16	Screw-HH
28	104-8301	24	Nut-HF, NI
29	127-1653	3	Decal
30	114-5641	2	Washer-Thrust
31	138-9000-03	2	Stop-Deck
32	69-9290	2	Pad-Bumper
33	32108-103	4	Screw-FH
34	104-8300	4	Nut-HF, NI
35	138-3085	2	Decal
36	125-6110	4	Decal-Danger
37	140-0021-0P	2	Bracket-Weight
38	3231-21	4	Screw-CARR
39	3230-13	4	Screw-CARR
40	140-0022-0P	2	Weight-8.00 Lbs
41	140-0023-0P	2	Weight-6.75 Lbs
42	140-0024-0P	2	Weight-5.50 Lbs
43	140-0025-0P	2	Weight-4.25 Lbs
44	140-0026-0P	2	Weight-3.00 Lbs

● Not serviced separately

Hydraulic Assembly

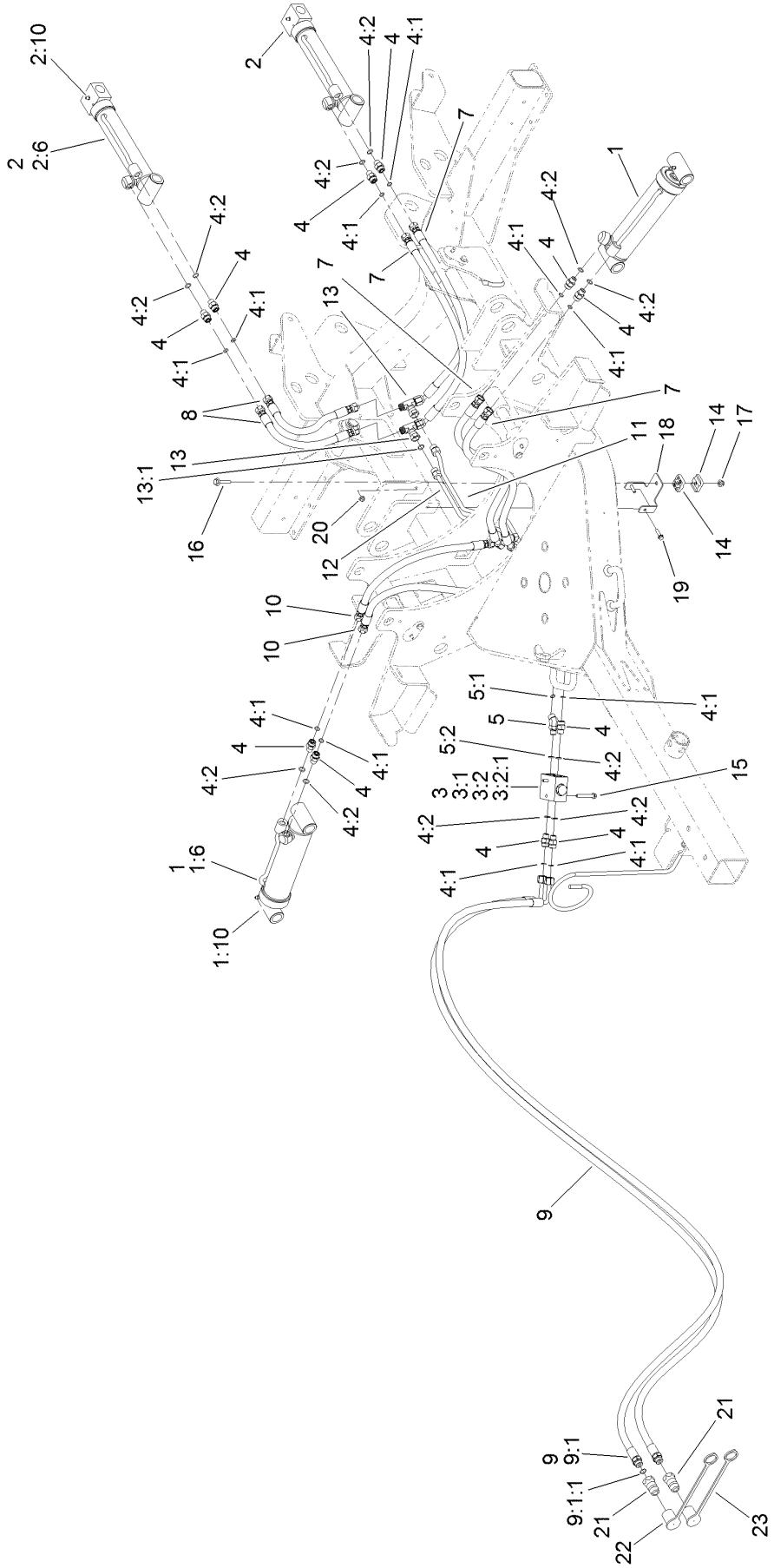

Hydraulic Assembly (continued)

Ref.	Part Number	Qty.	Description
1	137-3570	2	Cylinder ASM
1:6	137-3608	1	Kit-Seal
1:10	302-5	1	Fitting-Grease
2	137-3598	2	Cylinder ASM
2:6	137-3609	1	Kit-Seal
2:10	302-5	1	Fitting-Grease
3	138-3094	1	Manifold
3:1		1	Manifold Block ■
3:2	110-8881	1	Valve-Check
3:2:1	105-9159	1	Seal Kit ●
4	340-2	11	Fitting-Straight
4:1	237-22	1	O-Ring
4:2	237-42	1	O-Ring
5	340-87	1	Fitting-Elbow, 45 DEG
5:1	237-22	1	O-Ring
5:2	237-42	1	O-Ring
7	105-9817	4	Hose-HYD
8	99-3576	2	Hose-HYD
9	138-5296	2	Hose ASM
9:1		1	Fitting-Straight, Rgd ■
9:1:1	237-79	1	O-Ring
10	138-5297	2	Hose ASM
11	138-3064	1	Tube ASM
12	138-3065	1	Tube ASM
13	340-166	2	Fitting-Tee
13:1	237-22	2	O-Ring
14	56-7973	2	Clamp-Tube
15	3234-34	2	Screw-HHF
16	115-1794	1	Screw-HHF
17	104-8300	1	Nut-HF, NI
18	138-3096-01	1	Bracket-Hardline
19	120-4654	2	Screw-HHF
20	104-7201	2	Nut-HF, NI
21	112-4413	2	Coupler-Quick
22	138-3066	1	Cap-Dust, Red
23	T56152152	1	Cap-Connect, Quick

● Not illustrated

■ Not serviced separately

Blade, Pulley and Spindle Assembly

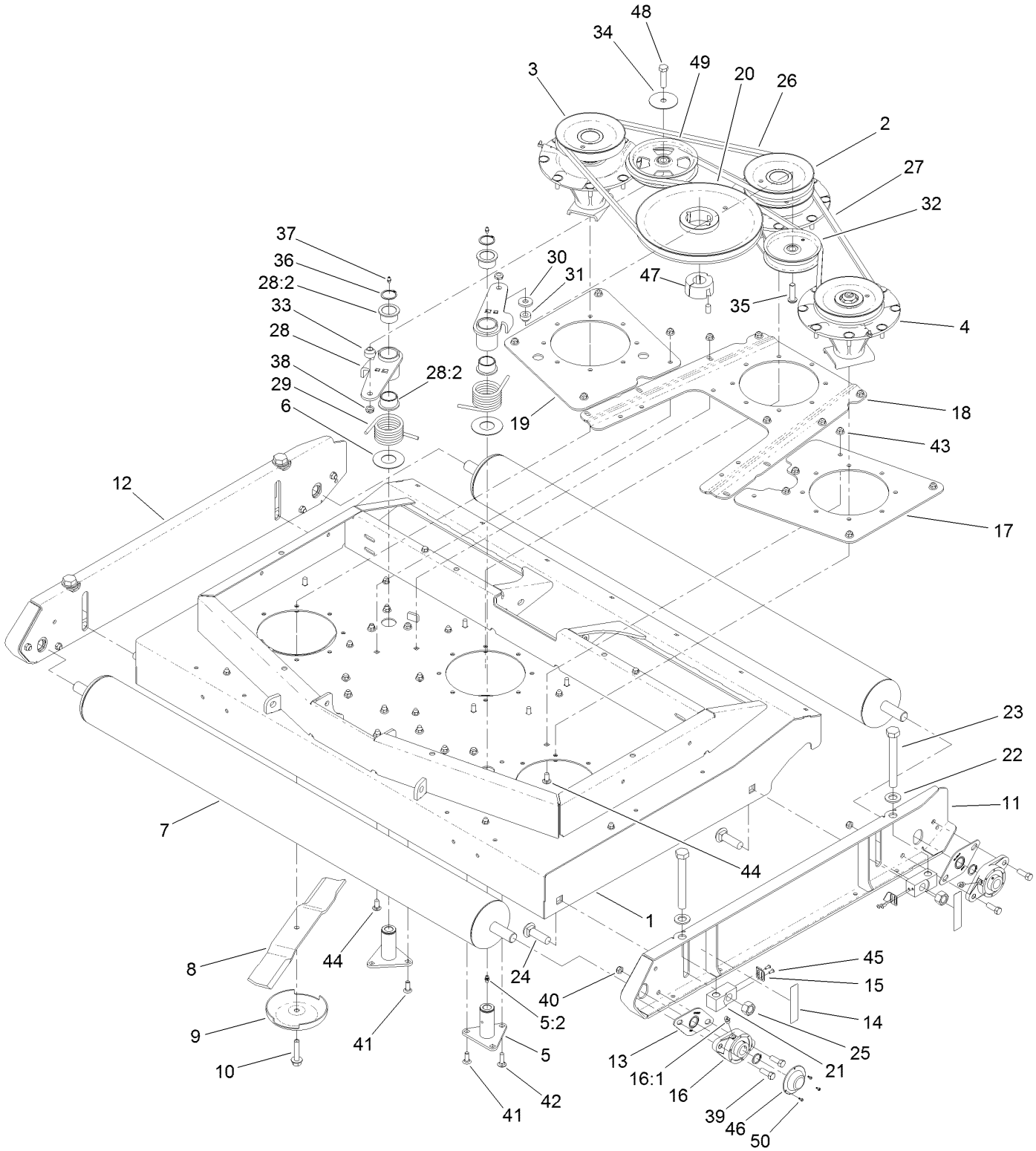

Blade, Pulley and Spindle Assembly (continued)

Ref.	Part Number	Qty.	Description
1	138-9026	1	Deck Shell ASM
2	139-3175	1	Double Spindle ASM
3	139-3176	1	High Spindle ASM
4	139-3177	1	Low Spindle ASM
5	137-5640	2	Idler Pivot ASM
5:2	302-5	1	Fitting-Grease
6	108-1926	2	Washer
7	140-0016SP	2	Roller ASM
8	137-3659-03	3	Blade-Lift, Medium
9	72-9361	3	Cup-Scalp, Anti
10	104-2444	3	Bolt-Blade, LH Thread
11	138-3083-01	1	Skid-LH
12	138-3084-01	1	Skid-RH
13	140-7024	4	Plate-Seal, Bearing
14	138-3087	4	Decal-HOC
15	138-3098	4	Indicator-HOC
16	140-7023	4	Bearing-Flange, 2 Bolt
16:1	302-33	1	Fitting-Grease
17	139-3181-01	1	Plate-Doubler, LH
18	139-3182-01	1	Plate-Doubler, Center
19	139-3183-01	1	Plate-Doubler, RH
20	138-5283	1	Pulley-Drive
21	138-3086	4	Block-HOC
22	3256-28	4	Washer-Flat
23	137-3648	4	Screw-HHCS
24	HDW17555	4	Bolt-Carriage
25	138-3092	4	Nut-Hex
26	137-3644	1	Belt-V
27	137-3645	1	Belt-V
28	137-3649	2	Idler Arm ASM
28:2	93-4510	2	Bushing-Caster
29	112-7395	2	Spring-Torsion
30	92-2651	1	Washer
31	121-5274	1	Spacer-Idler
32	1-613098	1	Pulley-Idler
33	69-6970	1	Spacer-Idler, Flat
34	100-3102	1	Washer-Flat
35	108-1993	1	Screw-HSBH
36	32120-84	2	Ring-Snap, External
37	302-5	2	Fitting-Grease
38	3296-45	2	Nut-Hex
39	324-5	8	Screw-HH
40	126-9780	8	Nut-Lock
41	3231-22	4	Screw-CARR
42	3231-25	2	Bolt-CARR
43	104-8301	43	Nut-HF, NI
44	3231-27	13	Screw-CARR
45	115-9830	8	Screw-HSBH
46	140-7004	4	Cover-Bearing
47	137-3660	1	Bushing-Taperlock
48	325-8	1	Screw-HH
49	132-9421	1	Pulley-Idler, Flat
50	140-7030	12	Screw-Cover

Deck Assembly No. 138-9026

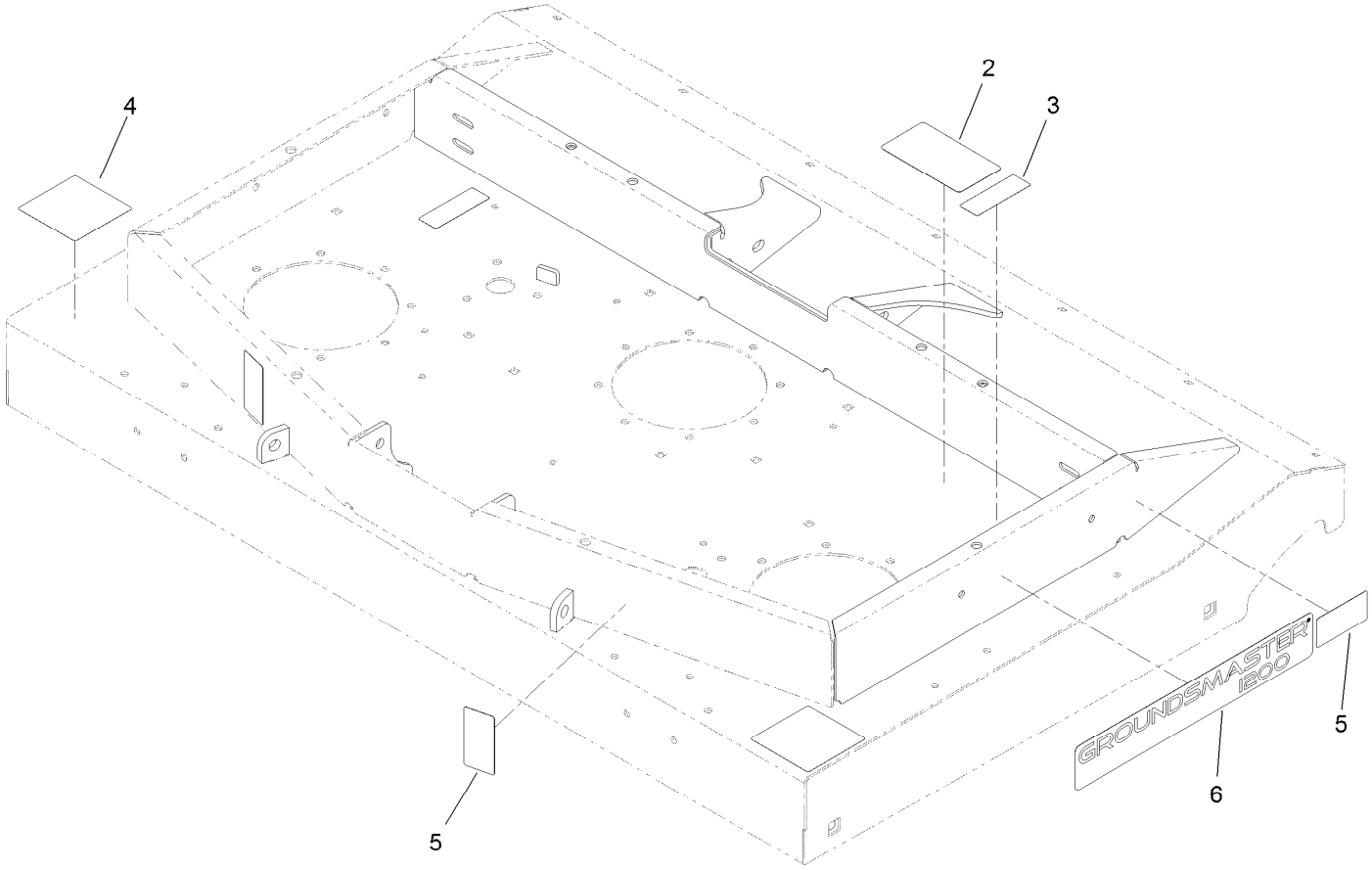

Deck Assembly No. 138-9026 (continued)

Ref.	Part Number	Qty.	Description
2	138-3078	1	Decal-Routing, Belt
3	117-4979	2	Decal-Warning
4	120-6604	2	Decal-Danger
5	125-6110	4	Decal-Danger
6	138-3085	2	Decal

Double Spindle Assembly No. 139-3175

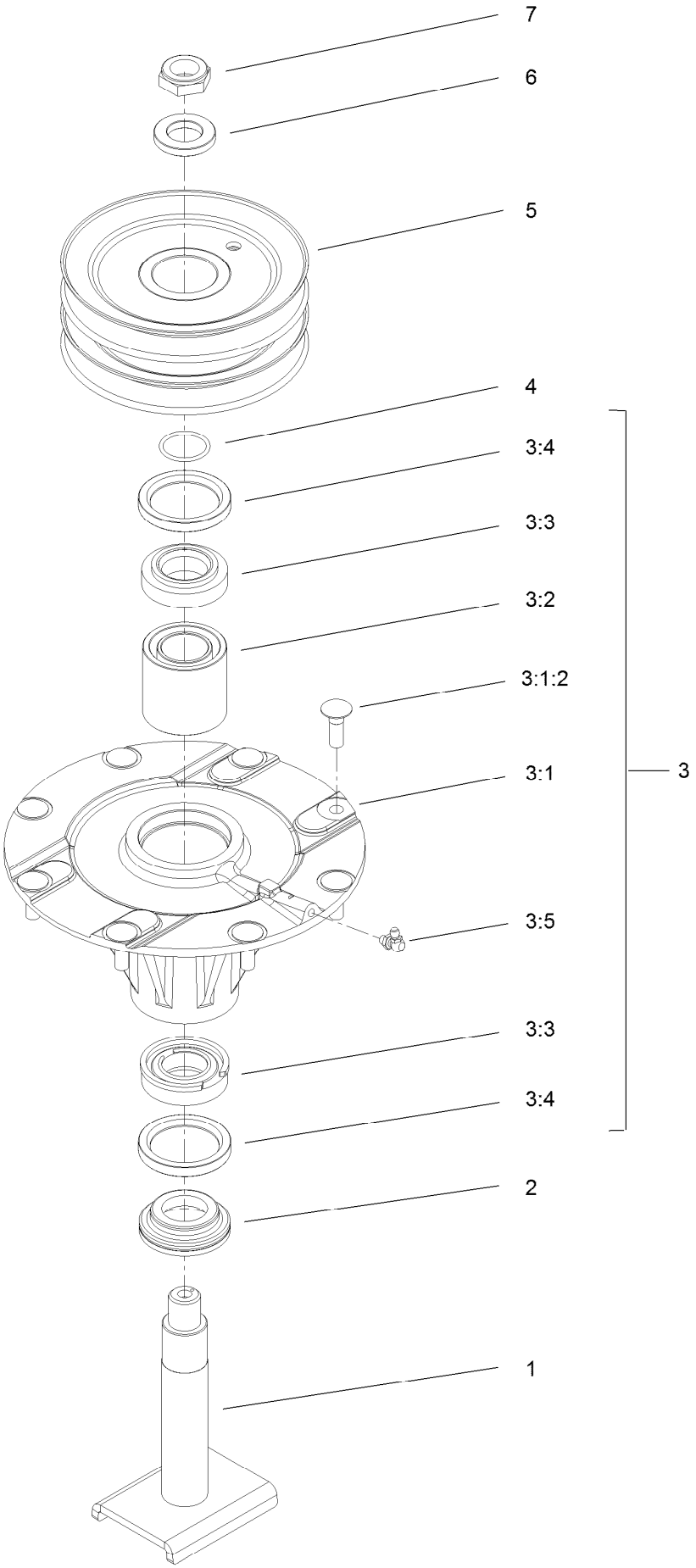

Double Spindle Assembly No. 139-3175 (continued)

Ref.	Part Number	Qty.	Description
1	139-3171	1	Spindle Shaft ASM
2	138-6416	1	Spacer-Spindle, Shaft
3	119-4777	1	Spindle ASM
3:1		1	Spindle ASM ●
3:1:2	114-8195	8	Bolt-Neck, Ribbed
3:2	108-1954	1	Bearing Spacer Set
3:3	110-8297	1	Bearing ASM
3:4	253-154	2	Seal-Oil
3:5	302-60	1	Fitting-Grease
4	106-7159	1	O-Ring
5	140-0032	1	Double Pulley ASM
6	120-5576	1	Washer-Hardened
7	3296-60	1	Nut-Lock, NI

● Not serviced separately

High Spindle Assembly No. 139-3176

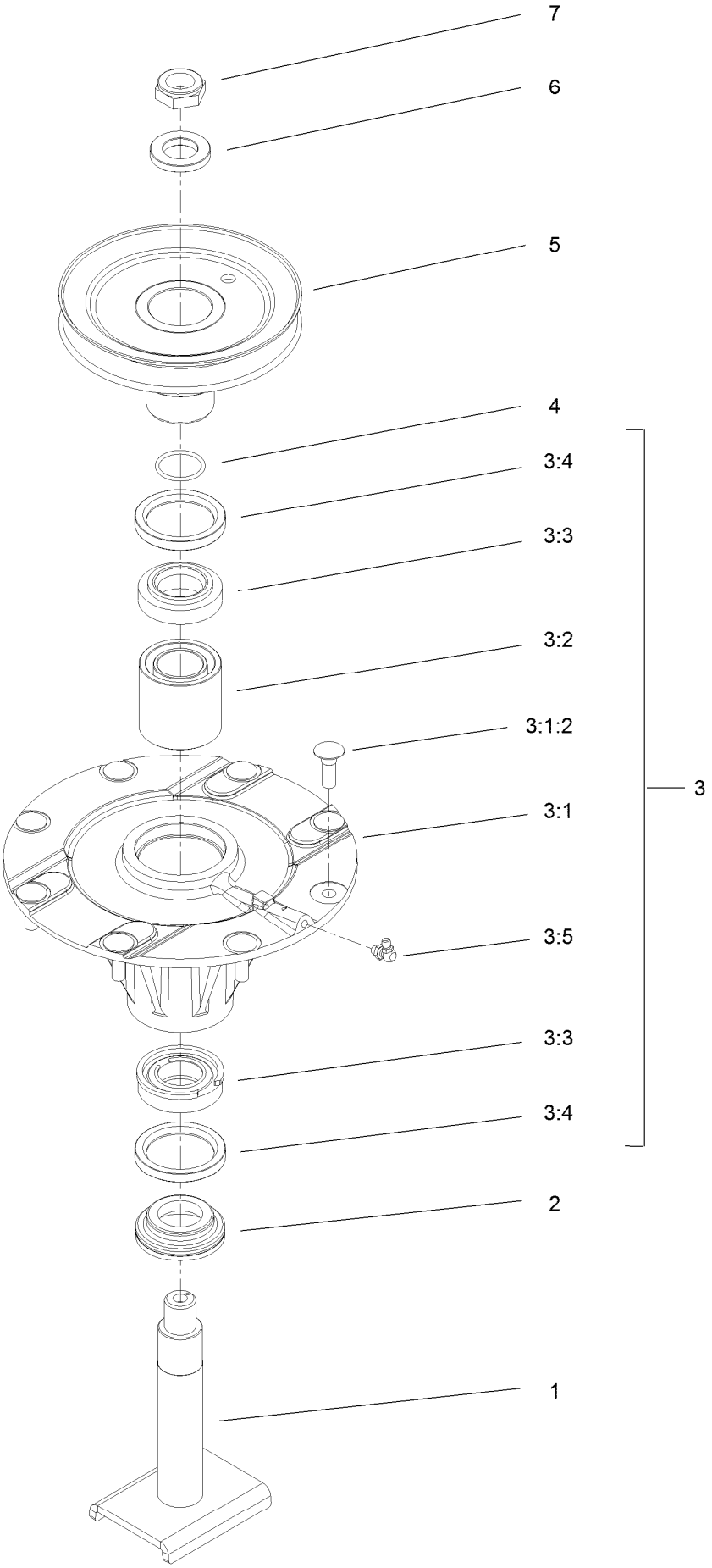

High Spindle Assembly No. 139-3176 (continued)

Ref.	Part Number	Qty.	Description
1	139-3171	1	Spindle Shaft ASM
2	138-6416	1	Spacer-Spindle, Shaft
3	119-4777	1	Spindle ASM
3:1		1	Spindle ASM ●
3:1:2	114-8195	8	Bolt-Neck, Ribbed
3:2	108-1954	1	Bearing Spacer Set
3:3	110-8297	1	Bearing ASM
3:4	253-154	2	Seal-Oil
3:5	302-60	1	Fitting-Grease
4	106-7159	1	O-Ring
5	140-0033	1	Single Pulley ASM
6	120-5576	1	Washer-Hardened
7	3296-60	1	Nut-Lock, NI

● Not serviced separately

Low Spindle Assembly No. 139-3177

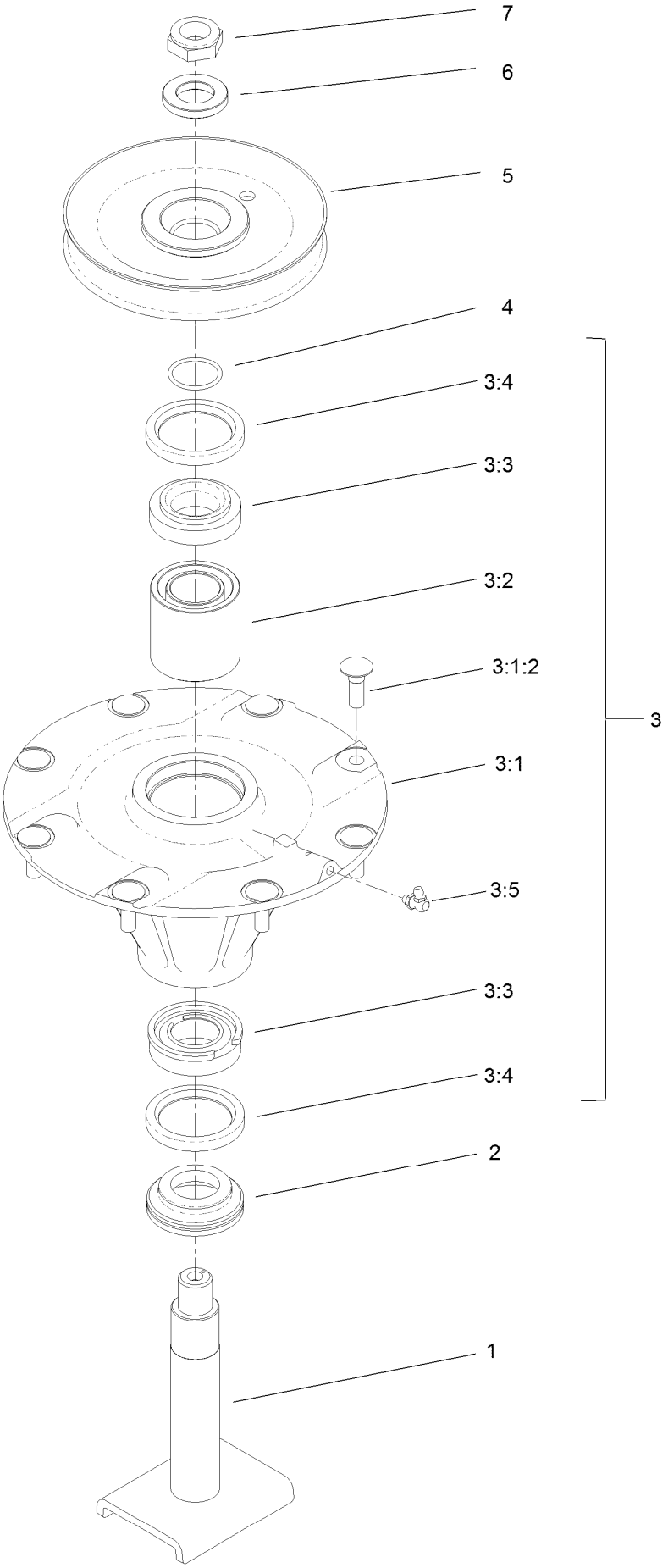

Low Spindle Assembly No. 139-3177 (continued)

Ref.	Part Number	Qty.	Description
1	139-3171	1	Spindle Shaft ASM
2	138-6416	1	Spacer-Spindle, Shaft
3	119-4777	1	Spindle ASM
3:1		1	Spindle ASM ●
3:1:2	114-8195	8	Bolt-Neck, Ribbed
3:2	108-1954	1	Bearing Spacer Set
3:3	110-8297	1	Bearing ASM
3:4	253-154	2	Seal-Oil
3:5	302-60	1	Fitting-Grease
4	106-7159	1	O-Ring
5	137-3629	1	Pulley-Driven, Low
6	120-5576	1	Washer-Hardened
7	3296-60	1	Nut-Lock, NI

● Not serviced separately

Deck Mount and Deck Cover Assembly

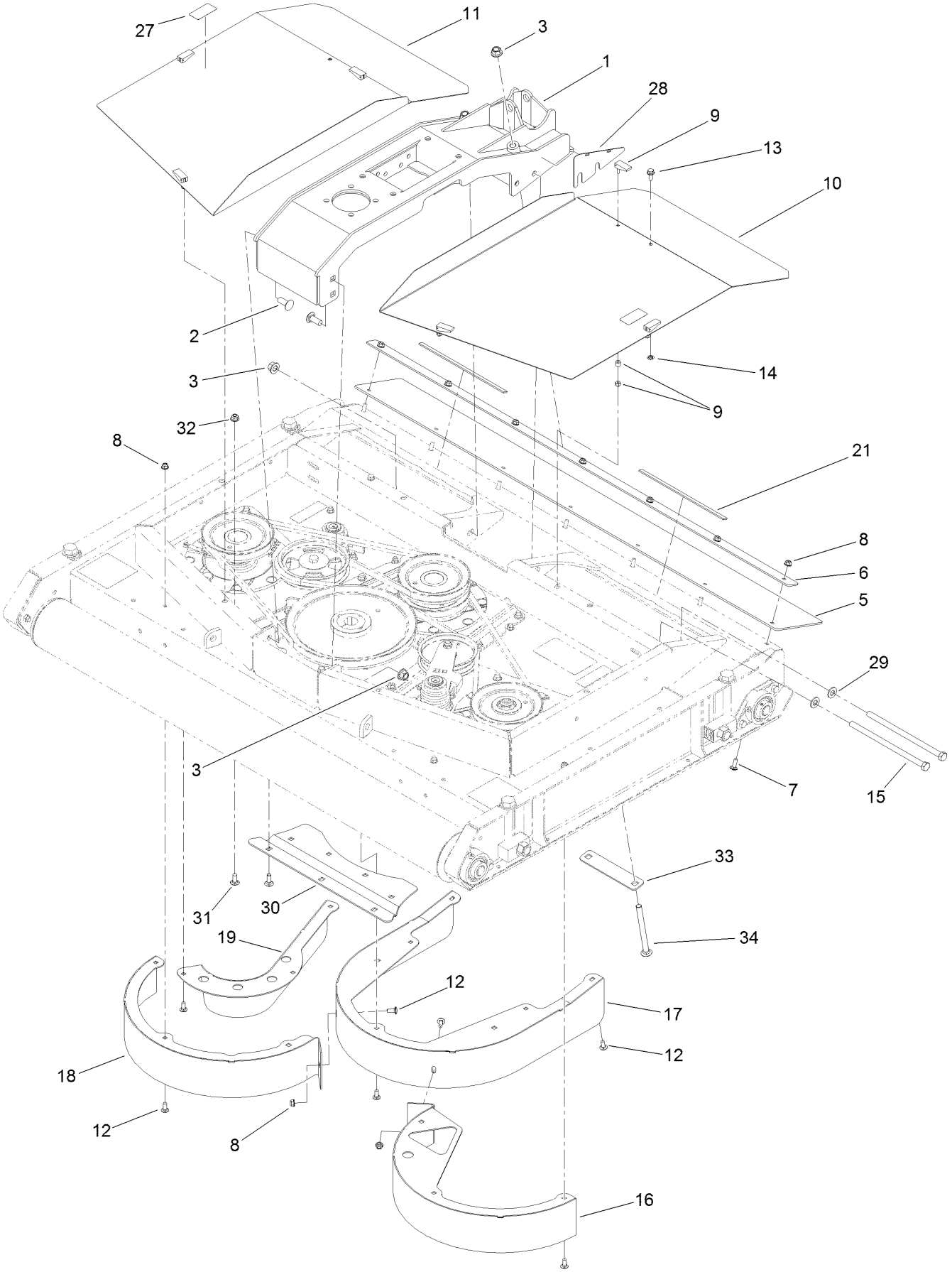

Deck Mount and Deck Cover Assembly (continued)

Ref.	Part Number	Qty.	Description
1	140-7000-03	1	Mount-Deck
2	3233-26	4	Screw-CARR,Shortneck
3	99-5107	8	Nut-Lock
5	137-3646	1	Flap-Rear
6	137-3647-01	1	Plate-Flap
7	3230-10	7	Bolt-CARR
8	104-8300	23	Nut-HF, NI
9	74-5950	6	Latch-Swell
10	137-3519-03	1	Cover-Deck, LH
11	137-3520-03	1	Cover-Deck, RH
12	3230-23	16	Bolt-CARR
13	3234-47	2	Screw-HHF
14	117-2749	2	Nut-Push
15	325-39	2	Screw-HH
16	139-3188-01	1	Chamber-LH
17	139-3189-01	1	Chamber-Center
18	139-3190-01	1	Chamber-RH
19	137-3665-01	1	Baffle-Inner
21	115-8827	2	Foam-Strip
27	119-6807	2	Decal-Warning
28	138-9027-03	2	Shim-Mount, Deck
29	3256-26	2	Washer-Flat
30	140-0030-01	1	Stiffener-Deck
31	3231-27	7	Screw-CARR
32	104-8301	7	Nut-HF, NI
33	140-7036	1	Plate-Cover
34	140-7029	2	Screw-CARR

Attachments and Accessories

For 31905 Groundsmaster 1200 Series Pull Behind Rotary Mower

Product Name	Model/Part
Pintle Hitch	07536
High Lift Blades MVP Kit	138-9028
Standard Lift MVP Kit	138-9029
SMV Kit	138-9030
Fender Kit	139-3174
Blade Cover Kit	139-3178
Safety Chain Kit	139-3179
Atomic Blade MVP Kit	140-0028
Roller Scraper Kit	140-0034
Hitch Clevis Kit	140-7011sp
Pintle Eye Kit	140-7012SP
1 Inch Hitch Pin	140-7025
Bearing Service Kit	140-7027
Tail Light Homologation Kit	31950

Notes:

Notes:

Notes:

TORO®

Count on it.