FORM NO. 3321-323 Rev A

TORO®

MODEL NO. 04381—80001 & UP

OPERATOR'S MANUAL

GREENSMASTER® 3200-D

To understand this product, and for safety and optimum performance, read this manual before starting operation. Pay special attention to SAFETY INSTRUCTIONS highlighted by this symbol.

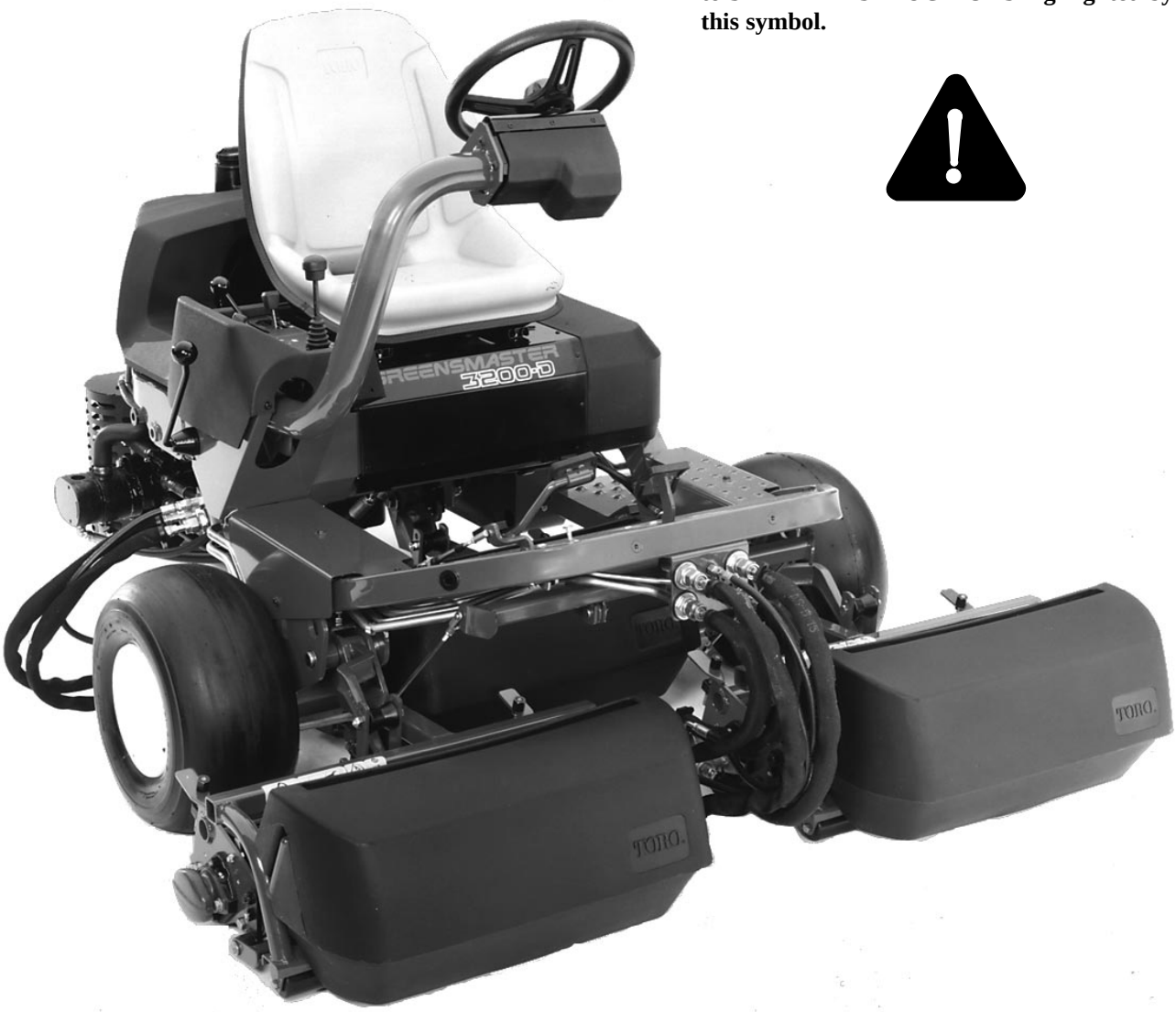

© The TORO Company 1998

FOREWORD

This operator's manual has instructions on safety, proper set-up and operation, adjustments and maintenance. Therefore, anyone involved with the product, including the operator, should read and understand this manual. This manual emphasizes safety, mechanical and general product information. **DANGER, WARNING** and **CAUTION** identify safety messages. Whenever the triangular safety alert symbol appears, understand the safety message that follows. For complete safety instructions, read pages 3–5. **IMPORTANT** highlights special mechanical information and NOTE emphasizes general product information worthy of special attention.

Whenever you have questions or need service, contact your local authorized Toro Distributor. In addition to having a complete line of accessories and professional turf care service technicians, the distributor has a complete line of genuine TORO replacement parts to keep your machine operating properly. Keep your TORO all TORO. Buy genuine TORO parts and accessories.

TABLE OF CONTENTS

SAFETY INSTRUCTIONS	3–5
SYMBOL GLOSSARY	6–8
SPECIFICATIONS	9–10
BEFORE OPERATING	11
Check The engine Oil	11
Fill The fuel Tank	11
Check Cooling System	11
Check Hydraulic System Fluid	12
Inspect The fuel Filter	13
Check Tire Pressure	14
Check Reel to Bedknife Contact	14
Check Torque of Wheel Nuts	14
CONTROLS	15–16
OPERATING INSTRUCTIONS	17
Break-In Period	17
Starting Instructions	17
Bleeding The fuel System	17
Check Interlock System Operation	18
Preparing The machine For Mowing	19
Training Period	19
Before Mowing	19
Mowing Procedures	19
Transport Operation	20
Inspection and Clean-up After Mowing	20
Towing The traction Unit	21
MAINTENANCE	22
SERVICE INTERVAL CHART	22
DAILY MAINTENANCE CHECKLIST	22
MAINTENANCE SCHEDULE	23
LUBRICATION	24
General Air Cleaner Maintenance	25
Servicing Air Cleaner	25
Cleaning Radiator and Screen	25
Changing The Engine Oil and Filter	26
Replacing The Fuel Filter	26
Changing Hydraulic Oil and Filter	27
Checking Hydraulic Lines and Hoses	27
Adjusting Cutting Unit Lift/Drop	27
Adjust Valve Clearance	28
Torque Cylinder Head Bolts	28
Battery Care	28
Battery Storage	29
Fuses	29
IDENTIFICATION AND ORDERING	29
WARRANTY	30

Safety Instructions

Training

1. Read the instructions carefully. Be familiar with the controls and the proper use of the equipment.

2. Never allow children or people unfamiliar with these instructions to use the lawn mower. Local regulations may restrict the age of the operator.

3. Never mow while people, especially children, or pets are nearby.

4. Keep in mind that the operator or user is responsible for accidents or hazards occurring to other people or their property.

5. Do not carry passengers.

6. All drivers should seek and obtain professional and practical instruction. Such instruction should emphasize:

- the need for care and concentration when working with ride-on machines;
- control of a ride-on machine sliding on a slope will not be regained by the application of the brake. The main reasons for loss of control are:
  - insufficient wheel grip;
  - being driven too fast;
  - inadequate braking;
  - the type of machine is unsuitable for its task;
  - lack of awareness of the effects of ground conditions, especially slopes;
  - ##incorrect hitching and load distribution.

Preparation

1. While mowing, always wear substantial footwear and long trousers. Do not operate the equipment when barefoot or wearing open sandals.

2. Thoroughly inspect the area where the equipment is to be used and remove all objects which may be thrown by the machine.

3. **WARNING—Petrol is highly flammable.**

- Store fuel in containers specifically designed for this purpose.
- Refuel outdoors only and do not smoke while refueling.
- Add fuel before starting the engine. Never remove the cap of the fuel tank or add petrol while the engine is running or when the engine is hot.
- If petrol is spilled, do not attempt to start the engine but move the machine away from the are of spillage and avoid creating any source of ignition until petrol vapors have dissipated.
- Replace all fuel tanks and container caps securely.

4. Replace faulty silencers.

Operation

1. Do not operate the engine in a confined space where dangerous carbon monoxide fumes can collect.

2. Mow only in daylight or in good artificial light.

3. Before attempting to start the engine, disengage all blade attachment clutches and shift into neutral.

4. Do not use on slopes of more than:

- Never mow side hills over 5°
- Never mow uphill over 10°
- Never mow downhill over 15°

5. Remember there is no such thing as a “safe” slope. Travel on grass slopes requires particular care. To guard against overturning:

- do not stop or start suddenly when going up or downhill;
- engage the clutch slowly, and always keep the machine in gear, especially when travailing downhill;
- machine speeds should be kept low on slopes and during tight turns;
- stay alert for bumps and hollows and other hidden hazards;

- never mow across the face of the slope, unless the lawn mower is designed for this purpose.

6. Use care when pulling loads or using heavy equipment.

- Use only approved drawbar hitch points.
- Limit loads to those you can safely control.
- Do not turn sharply. Use care when reversing.
- Use counterweight(s) or wheel weights when suggested in the instruction handbook.

7. Watch out for traffic when crossing or near roadways.

8. Stop the blades rotating before crossing surfaces other than grass.

9. When using any attachments, never direct discharge of material toward bystanders nor allow anyone near the machine while in operation .

10. Never operate the lawn mower with defective guards, shields or without safety protective devices in place.

11. Do not change the engine governor settings or overspeed the engine. Operating the engine at excessive speeds may increase the hazard of personal injury.

12. Before leaving the operator's position:

- disengage the power take-off and lower the attachments;
- change into neutral and set the parking brake;
- stop the engine and remove the key.

13. Disengage the drive to attachments when transporting or not in use.

14. Stop the engine and disengage the drive to the attachment

- before refueling;
- before removing the grass catcher;
- before making height adjustments unless the adjustment can be made from the operator's position.
- before clearing blockages;
- before checking, cleaning or working on the lawn mower;
- after striking a foreign object. Inspect the lawn mower for damage and make repairs before restarting and operating the equipment.

15. Reduce the throttle setting during engine runout and, if the engine is provided with a shutoff valve, turn the fuel off at the conclusion of mowing.

Maintenance and Storage

1. Keep all nuts, bolts and screws tight to be sure the equipment is in safe working condition.

2. Never store the equipment with petrol in the tank inside a building where fumes may reach an open flame or spark.

3. Allow the engine to cool before storing in any enclosure.

4. To reduce the fire hazard, keep the engine, silencer, battery compartment and petrol storage area free of grass, leaves, or excessive grease.

5. Check the grass catcher frequently for wear or deterioration.

6. Replace worn or damaged parts for safety.

7. If the fuel tank has to be drained, this should be done outdoors.

8. Be careful during adjustment of the machine to prevent entrapment of the fingers between moving blades and fixed parts of the machine.

9. On multi-bladed machines, take care as rotating one blade can cause other blades to rotate.

10. When the machine is to be parked, stored or left unattended, lower the cutting means unless a positive mechanical lock is used.

Sound & Vibration Levels

Sound Levels

This unit has an equivalent continuous A-weighted sound pressure at the operator ear of: 81 dB(A), based on measurements of identical machines per 84/538/EEC.

Vibration Levels

This unit has a vibration level of 2.5 m/s^2 at the posterior, based on measurements of identical machines per ISO 5349 procedures.

This unit does not exceed a vibration level of 0.5 m/s^2 at the posterior based on measurements of identical machines per ISO 2631 procedures.

Symbol Glossary

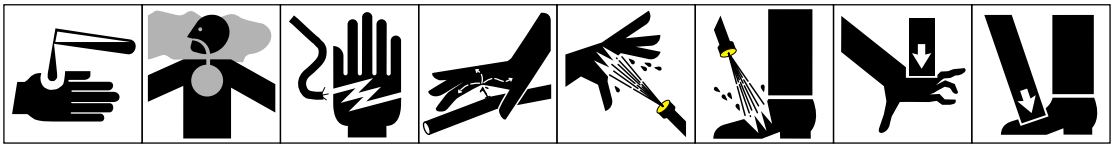

Caustic liquids, chemical burns to fingers or hand | Poisonous fumes or toxic gases, asphyxiation | Electrical shock, electrocution | High pressure fluid, injection into body | High pressure spray, erosion of flesh | High pressure spray, erosion of flesh | Crushing of fingers or hand, force applied from above | Crushing of toes or foot, force applied from above

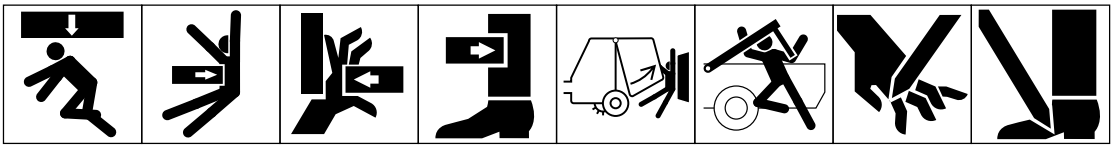

Crushing of whole body, applied from above | Crushing of torso, force applied from side | Crushing of fingers or hand, force applied from side | Crushing of leg, force applied from side | Crushing of whole body | Crushing of head, torso and arms | Cutting of fingers or hand | Cutting of foot

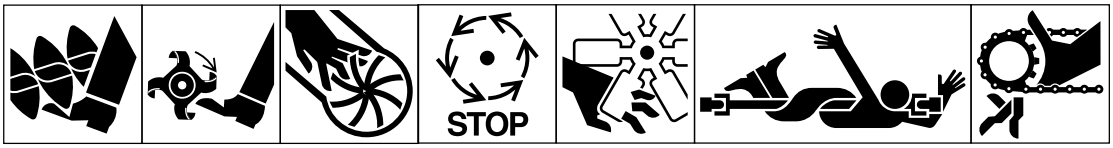

Cutting or entanglement of foot, rotating auger | Severing of foot, rotating knives | Severing of fingers or hand, impeller blade | Wait until all machine components have completely stopped before touching them | Severing of fingers or hand, engine fan | Whole body entanglement, implement input drive line | Fingers or hand entanglement, chain drive

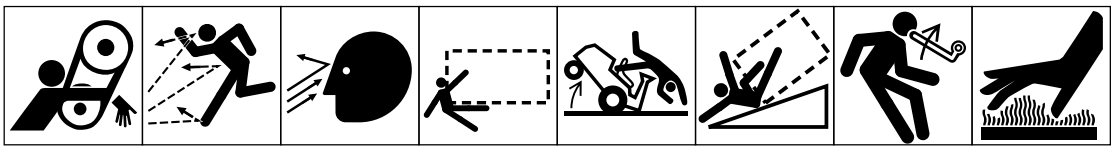

Hand & arm entanglement, belt drive | Thrown or flying objects, whole body exposure | Thrown or flying objects, face exposure | Runover/backover, (relevant machine to appear in dashed box) | Machine tipping, riding mower | Machine rollover, ROPS (relevant machine to appear in dashed box) | Stored energy hazard, kickback or upward motion | Hot surfaces, burns to fingers or hands

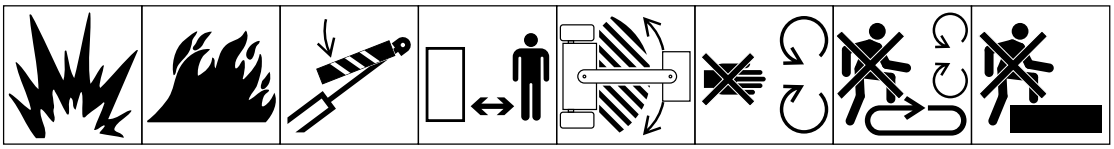

Explosion | Fire or open flame | Secure lifting cylinder with locking device before getting in hazardous area | Stay a safe distance from the machine | Stay clear of articulation area while engine is running | Do not open or remove safety shields while engine is running | Do not step on loading platform if PTO is connected to tractor & engine is running | Do not step

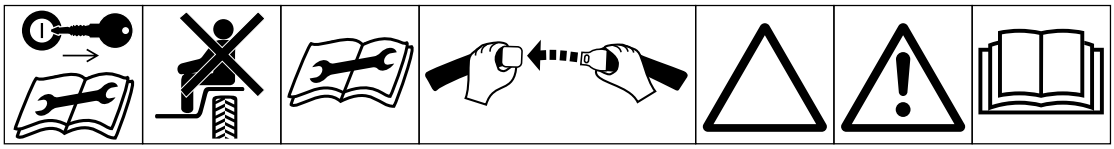

Shut off engine & remove key before performing maintenance or repair work | Riding on this machine is allowed only on a passenger seat & only if the driver's view is not hindered | Consult technical manual for proper service procedures | Fasten seat belts | Safety alert triangle | outline safety alert symbol | Read operator's manual

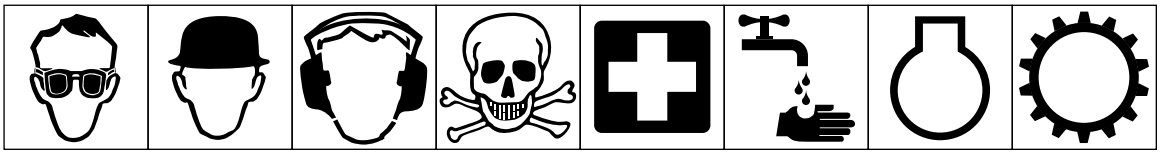

Eye protection must be worn | Head protection must be worn | Hearing protection must be worn | Caution, toxic risk | First aid | Flush with water | Engine | Transmission

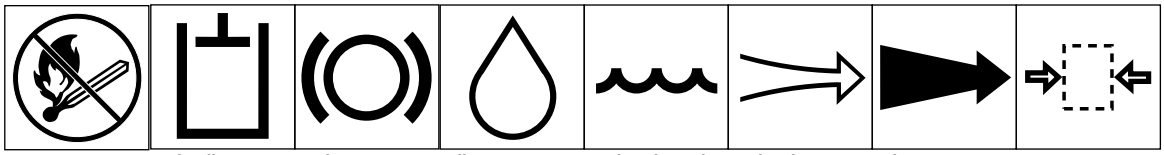

Fire, open light & smoking prohibited | Hydraulic system | Brake system | Oil | Coolant (water) | Intake air | Exhaust gas | Pressure

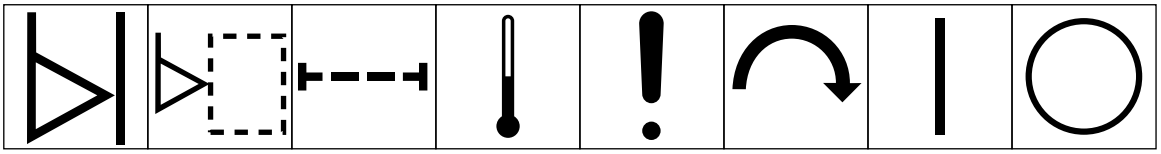

Level indicator | Liquid level | Filter | Temperature | Failure/ Malfunction | Start switch/ mechanism | On/start | Off/stop

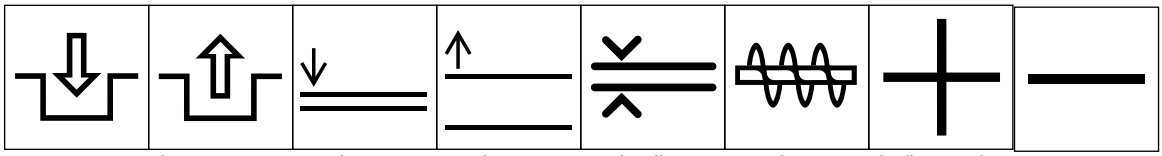

Engage | Disengage | Attachment lower | Attachment raise | Spacing distance | Snow thrower, collector auger | Plus/increase/ positive polarity | Minus/decrease/ negative polarity

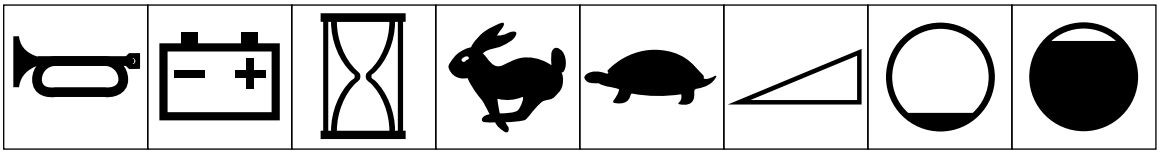

Horn | Battery charging condition | Hourmeter/elapsed operating hours | Fast | Slow | Continuous variable, linear | Volume empty | Volume full

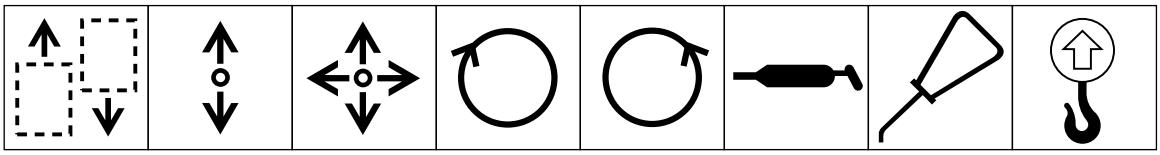

Machine travel direction, forward/rearward | Control lever operating direction, dual direction | Control lever operating direction, multiple direction | Clockwise rotation | Counter-clock-wise rotation | Grease lubrication point | Oil lubrication point | Lift point

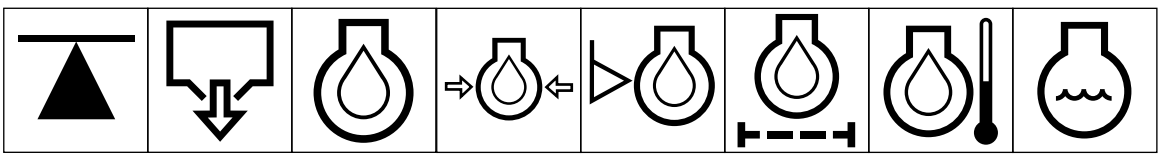

Jack or support point | Draining/ emptying | Engine lubricat-ing oil | Engine lubricating oil pressure | Engine lubricating oil level | Engine lubricating oil filter | Engine lubricating oil temperature | Engine coolant

Symbol Glossary, continued

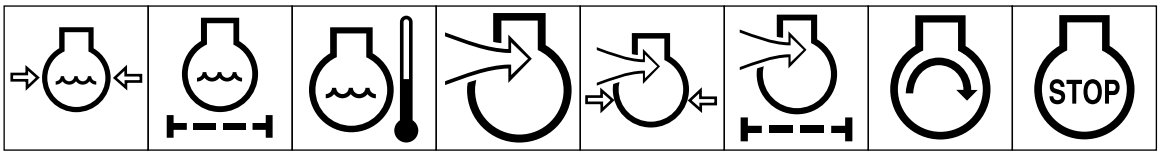

Engine coolant pressure | Engine coolant f ilter | Engine lubricating oil pressure | Engine intake/ combustion air | Engine intake/ combustion air pressure | Engine intake/ air filter | Engine start | Engine stop

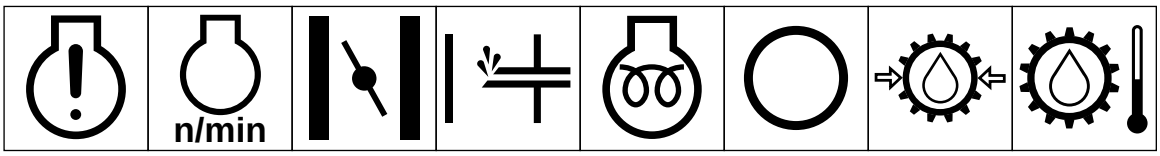

Engine failure/ malfunction | Engine rotational speed/frequency | Choke | Primer (start aid) | Electrical preheat (low temperature start aid) | Transmission oil | Transmission oil pressure | Transmission oil temperature

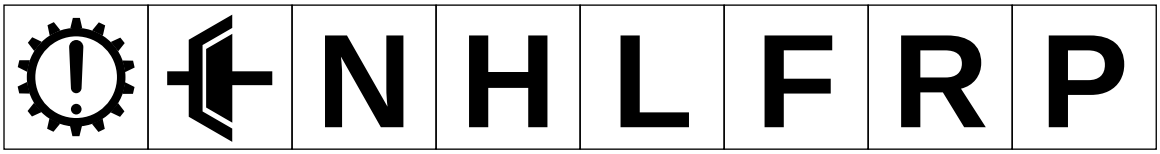

Transmission failure/malfunction | Clutch | Neutral | High | Low | Forward | Reverse | Park

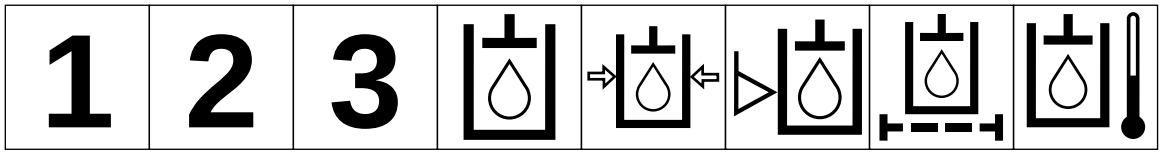

First gear | Second gear | Third gear (other #'s may be used until the maximum # of forward gears is reached.) | Hydraulic oil | Hydraulic oil pressure | Hydraulic oil level | Hydraulic oil filter | Hydraulic oil temperature

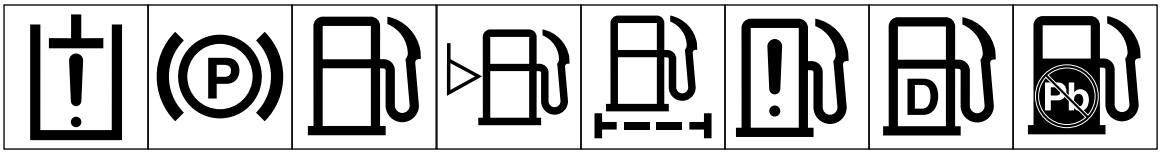

Hydraulic oil failure/malfunction | Parking brake | Fuel | Fuel level | Fuel filter | Fuel system failure/malfunction | Diesel fuel | Unleaded fuel

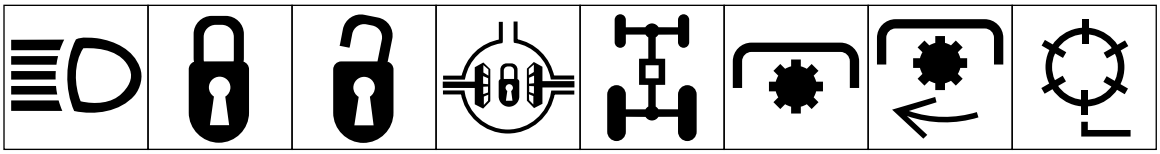

Headlights | Lock | Unlock | Differential lock | 4-Wheel drive | Power Take-Off | Power Take-Off, rotational speed | Reel cutting element

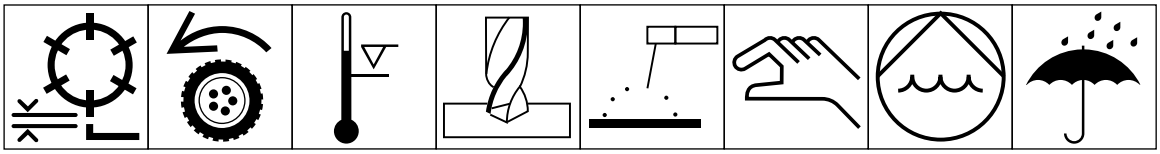

Reel cutting element, height adjustment | Traction | Above working temperature range | Drilling | Manual metal arc welding | Manual | 0356 Water pump | 0626 Keep dry

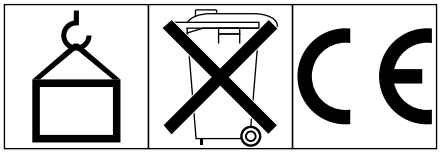

Specifications

Configuration: Tricycle vehicle with two front wheels providing drive and one rear wheel providing steering. The operator sits in the center over the #1 cutting unit with the #2 and #3 cutting units in front of the vehicle.

Certification: Certified to meet ANSI specification B7 1.4-1 990 and European CE standards.

Engine: Perkins 103-07 three-cylinder water-cooled engine. 41.3 cu. in. (676 cc) Full-pressure lubrication, oil filter. 12.7 kW at 3600 rpm, 9.8 kW at 2600 rpm. Engine governed to 3025±50 rpm high idle, 1500 ±50 rpm low idle (no load).

Frame: Welded steel tube construction in an "A" frame configuration.

Air Cleaner: Donaldson heavy-duty remote air cleaner.

Steering: Power steering. Danfoss open-center, non-load reacting steering valve with power beyond for raise/lower circuit and Hydrostat charge circuit. 33 cm round steering wheel. Quick adjust steering arm position, with arm motion allowing a wide range of operator sizes. Steering cylinder has a 3.81 inch bore x 15.875 stroke with through shaft design for accurate straight line steering.

Fuel Capacity: 6 gallons (22.7 liters) capacity, diesel.

Hydraulic Oil Capacity: 5.5 gallon (20.8 liter) nylon oil reservoir. Mobile 424 standard. Moble EAL 24H approved. Hydraulic oil filter has 5-micron, long-life filtration of reel circuit.

Traction Drive: Hydrostatic piston pump, closed loop system. Foot pedal forward and reverse; infinitely variable. Two front-wheel orbit motors, 26.2 ^{3} cm/rev displacement.

Ground Speed: Forward—mowing speed is variable from 2 to 5 mph (3.2 to 8 km/h), adjusted by a stop on the pedal mechanism. Mow speed setting does not affect transport speed. Maximum transport speed is 8.1 mph (13 km/h); it may be reduced by adjusting the stop in footrest pan without affecting mow speeds. Reverse is 2.5 mph (4.0 km/h).

Turf Compaction Pressure: 69 kPa average at recommended minimum tire pressures, with a 75 kg operator and cutting units down.

Tires: Three 18 x 9.50 x 8, 2-ply pneumatic tubeless demountable and interchangeable. Smooth tread.

Tire pressure: 55–83 kPa front
55–103 kPa rear

Brakes: 15 cm drum type mechanical with rack and pawl lock for parking.

Cutting Unit Drive: Hydraulic drive; one 1.27^{3} cm/rev gear pump section powers three reel motors in series. Manifold block with cartridge valves controls flow, electrical on/off. Reel motors have 1.85^{3} cm/rev displacement, low pressure case drains, and Toro exclusive "twist-mount" partial flange cut-away for fast installation.

Clip: Dependent on mowing ground speed, reel rpm, and number of reel blades. Mowing ground speed is easily changed by adjusting the pedal mow stop (this will not affect transport speed). lncreasing ground speed will increase clip length and decrease cuts per meter. In general, the quality of cut will be best when clip and height of cut are nearly equal.

Cutting Unit Suspension: Cutting units are completely free floating, each attaching to the traction unit by a single low pull point and lifted by a centered lift arm. Baskets are supported by carrier frames that are suspended off the ground by adjustable stops in the tractor frame weldment. Cutting unit floatation is unaffected by basket content.

Electrical Features: Maintenance-free 12-volt battery with 530 cold cranking amps at –18° C and 85 minutes reserve capacity at 29° C. 27-amp alternator, circuit fused at 40 amps. Ignition switch/key. Seat switch. High-temperature engine-kill override switch. Harness terminals. Fuse slot, and console switch location available for optional lights installation.

Controls/Gauges: Hand-operated throttle, raise/lower/mow lever, and functional control (neutral, mow, transport) lever. Foot-operated traction drive brakes. Hour meter and 4-bulb warning cluster.

Interlocks:

The traction pedal locks when the functional control lever is in neutral.

Engine cranking requires the functional control lever in neutral, operator does not have to be in seat.

The engine will shut off if operator leaves seat without the functional control lever in neutral.

Reels turning forward requires the operator on the seat, the functional control lever in mow and raise/lower/mow control momentarily engaged.

Reels turning backward for backlap requires optional variable reel speed installed. Then the reels are allowed to turn backwards when the functional control lever in neutral and the backlap switch is closed, showing reel direction is reversed.

Seat: Contour seat with high backrest. 18 cm fore/aft slider adjustment with two mounting positions allowing 22.8 cm total seat travel. Operator manual tube is mounted on the seat back for easy access.

General Specifications:

Width of Cut:	59.0 in. (150 cm)
Wheel Tread:	49.9 in. (127 cm)
Wheel Base:	47.6 in. (121 cm)
Overall Length (w/baskets)	92.4 in. (235 cm)
Overall Width:	68.0 in. (173 cm)
Overall Height:	50.5 in. (128 cm)
Weight w/reels (8 Blade 4 Bolt):	1,358 lbs. (616 kg)

Before Operating

CHECK THE ENGINE OIL (Fig. 1–2)

The engine is shipped with oil in the crankcase; however, the oil level must be checked before and after the engine is first started.

Crankcase capacity is 3.2 qts. (3 L) with filter.

1. Position the machine on a level surface.

2. Remove the dipstick and wipe it with a clean cloth. Push the dipstick down into the dipstick tube and make sure it is seated fully. Pull the dipstick out and check the level of oil. If the oil level is low, add enough oil to raise the level to the FULL mark on the dipstick.

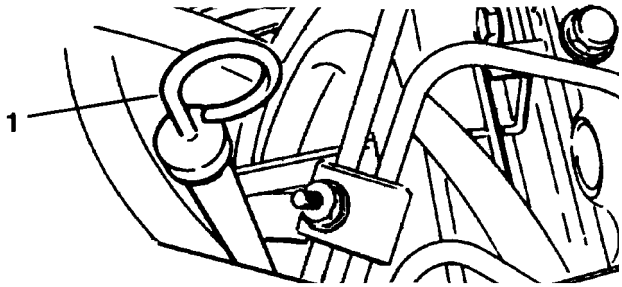

Figure 1

1. Dipstick

3. If the oil level is low, remove the oil fill cap (Fig. 2) and gradually add small quantities of oil, checking the level frequently, until the level reaches the FULL mark on the dipstick.

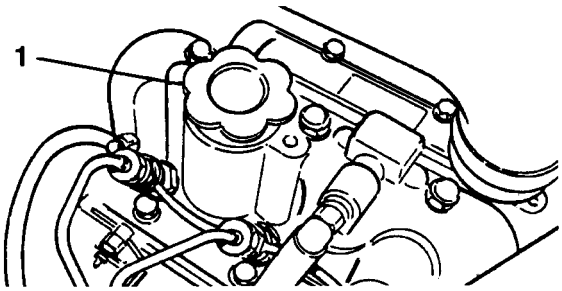

Figure 2

1. Oil fill cap

4. The engine uses any high-quality, 10W30 detergent oil having the American Petroleum Institute—API "service classification" CD.

IMPORTANT: Check the level of oil every five operating hours or daily. Change the oil after every 50 hours of operation.

FILL THE FUEL TANK (Fig. 3)

The engine runs on No. 2 diesel fuel. Fuel tank capacity is 6 gallons (22.7 L)

1. Clean the area around the fuel tank cap.

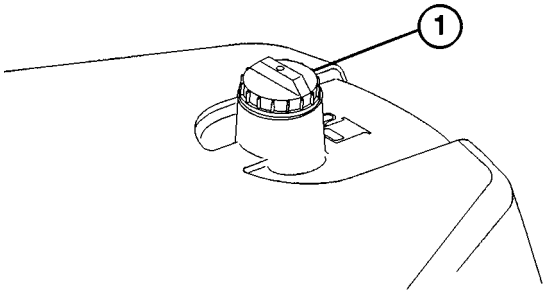

Figure 3

1. Fuel tank cap

2. Remove the fuel tank cap.

3. Fill the tank to about one inch below the top of the tank, (bottom of the filler neck). DO NOT OVERFILL. Then install the cap.

4. Wipe up any fuel that may have spilled to prevent a fire hazard.

⚠ DANGER

Because diesel fuel is flammable, use caution when storing or handling it. Do not smoke while filling the fuel tank. Do not fill fuel the tank while engine is running, hot, or when the machine is in an enclosed area. Always fill the fuel tank outside and wipe up any spilled diesel fuel before starting the engine. Store fuel in a clean, safety-approved container and keep the cap in place. Use diesel fuel for the engine only; not for any other purpose.

CHECK THE COOLING SYSTEM (Fig. 4–5)

Capacity of the cooling system is 3.4 L.

Clean debris off the radiator screen and the radiator daily (Fig. 4)—hourly if conditions are extremely dusty and dirty; refer to *Cleaning the Radiator and Screen.*

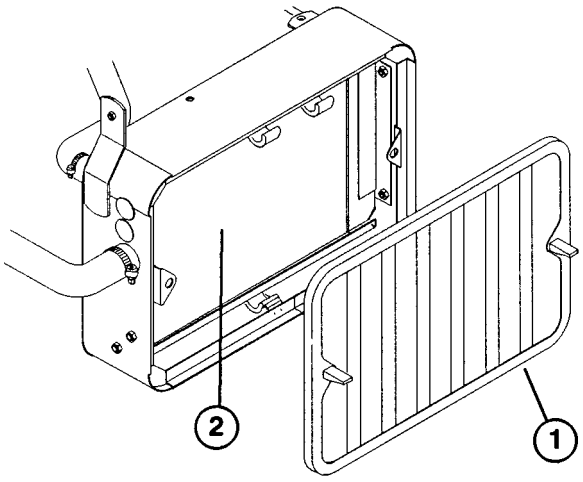

Figure 4

1. Radiator screen
2. Radiator

The cooling system is filled with a 50/50 solution of water and permanent ethylene glycol anti-freeze. Check the level of coolant at beginning of each day before starting the engine.

⚠ CAUTION

If the engine has been running, pressurized hot coolant can escape and cause burns.

1. Park the machine on a level surface.

2. Check coolant level. Coolant should be between the lines on reserve tank, when the engine is cold.

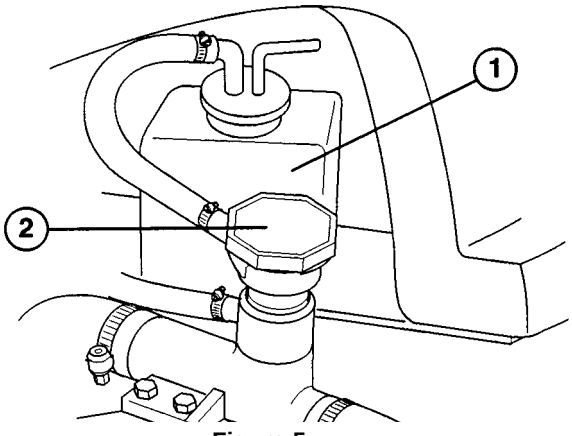

Figure 5

1. Reserve tank
2. Radiator cap

3. If coolant is low, remove the reserve tank cap and add a 50/50 mixture of water and permanent ethylene glycol anti-freeze. DO NOT OVERFILL.

4. Install the reserve tank cap.

CHECK THE HYDRAULIC SYSTEM FLUID

The hydraulic system is designed to operate on anti-wear hydraulic fluid. The machine's reservoir is filled at the factory with 5.5 gallons (20.8 L) of Mobil 424 hydraulic fluid. **Check the level of hydraulic fluid before the engine is first started and daily thereafter.**

Group 1 Hydraulic Fluid (Recommended for ambient temperatures consistently below 100° F)

Mobil	Mobil Fluid 424
Amoc	Amoco 1000
International Harvester	Hy-Tran
Texaco	TDH
Boron Oil	Eldoran UTH
BP Oil	BP HYD TF
Chevron	Tractor Hydraulic fluid
Conoco	Power-Tran 3
Exxon	Torque fluid
Kendall	Hyken 052
Phillips	HG fluid
Shell	Donax TD
Union Oil	Hydraulic/Tractor fluid

Note: The fluids within this group are interchangeable.

Group 2 Hydraulic Fluid (Recommended for ambient temperatures consistently below 70° F)

ISO type 46/68 anti-wear hydraulic fluid

Mobil	DTE 26 or DTE 16
Shell	Tellus 68
Amoco	Rykon Oil 68
Arco	Duro AW S-315
Boron	Industron 53
BP Oil	Energol HLP68
Castrol	Hyspin AWS68
Chevron	Chevron EP68
Citgo	Citgo A/W68
Conoco	Super Hydraulic Oil 31
Exxon	Nuto H68
Gulf	68AW
Pennzoil	IAW Hyd Oil 68

Phillips	Magnus A 315
Standard	Industron 53
Texaco	Rando HD68
Union	Unax AW 315

Note: The fluids within this group are interchangeable.

IMPORTANT: Two groups of hydraulic fluid are specified to allow optimal operation of the machine in a wide range of temperatures. The group 1 fluids are multi-viscosity fluids, which allow operation at lower temperatures without the increased viscosity associated with straight viscosity fluids.

Using the Mobil 424 type fluids in the higher ambient temperatures may result in decreased efficiency in some of the hydraulic components compared with using the Mobil DTE 26 type fluids.

The Mobil DTE 26 type fluids are straight viscosity fluids which remain slightly more viscous at higher temperatures than the multi-viscosity fluids.

Using the Mobil DTE 26 type fluids in the lower ambient temperatures may result in harder starting, increased engine laboring while cold, sluggish or non-operating valve spools while cold and increase filter back pressure.

It is recommended that you select the set of conditions (either ambient temperatures above 70° F, or below 100° F), and use that type of fluid throughout the year, instead of changing fluid types several times during the year.

Group 3 Hydraulic Fluid (Biodegradable):

ISO type 32/46 anti-wear hydraulic fluid

Mobil	EAL 224 H

Note: This biodegradable hydraulic fluid is not compatible with the fluids in group 1 or 2. Using this hydraulic fluid may require an oil cooler kit (Model No. 04499) to be installed.

Note: When changing from one type of hydraulic fluid to another, be certain to remove all the old fluid from the system because some brands are not completely compatible with other brands of hydraulic fluid.

Note: A red dye additive for the hydraulic system fluid is available in19.8 ml bottles. One bottle is sufficient for 22 L of hydraulic fluid. Order Part No. 44-2500 from your Authorized Toro Distributor.

1. Position the machine on a level surface. Make sure the machine has cooled down so fluid is cold.

2. Remove the cap from reservoir and check the level of fluid. The fluid should be up to bottom of screen in the filler neck.

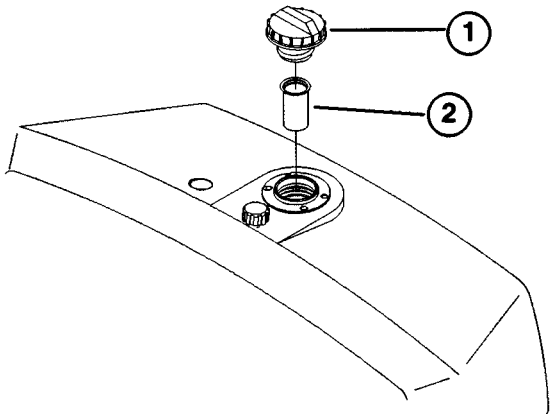

Figure 6
1. Hydraulic reservoir cap
2. Screen

3. If the fluid level is low, slowly fill reservoir with Mobil DTE 26 or equivalent hydraulic fluid until the level reaches the bottom of the screen. DO NOT OVERFILL.

   IMPORTANT: To prevent system contamination, clean the tops of hydraulic fluid containers before puncturing them. Assure the pour spout and funnel are clean.

4. Install the reservoir cap. Wipe up any fluid that may have spilled.

INSPECT THE FUEL FILTER (Fig. 7)

Inspect the fuel filter bowl, daily, for water or other contaminants. If water or other contaminants are present, they must be removed before commencing operation.

1. Close the fuel shut-off above the filter.

2. Unscrew the nut securing the bowl to the filter head. Remove water or other contaminants from the bowl.

3. Inspect the fuel filter and replace if dirty. Refer to *Replacing The Fuel Filter*.

4. Re-install the bowl to the filter head. Make sure the O-ring is positioned properly between the bowl mounting nut and the filter head.

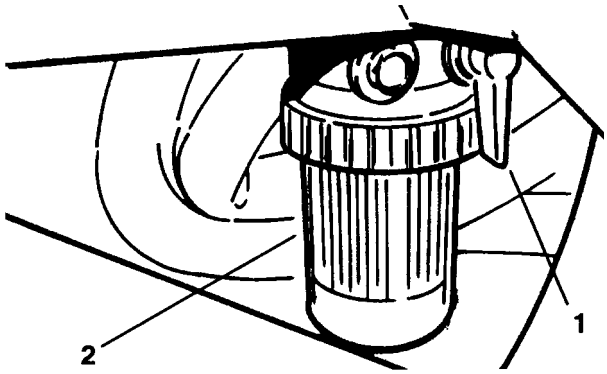

Figure 7

1. Fuel shut-off
2. Fuel filter

5. Open the fuel shut-off above the filter.

6. Open the bleed screw on the filter mounting allowing the bowl to re-fill with fuel. Close the bleed screw.

DANGER

Because diesel fuel is flammable, use caution when storing or handling it. Do not smoke while filling the fuel tank. Do not fill fuel the tank while engine is running, hot, or when the machine is in an enclosed area. Always fill the fuel tank outside and wipe up any spilled diesel fuel before starting the engine. Store fuel in a clean, safety-approved container and keep the cap in place. Use diesel fuel for the engine only; not for any other purpose.

CHECK TIRE PRESSURE

The tires are over-inflated for shipping. Therefore, release some of the air to reduce the pressure. Correct air pressure is:

Front tires 55–83 kPa
Rear tire 55–103 kPa

CHECK THE REEL-TO-BEDKNIFE CONTACT

Each day before operating, check the reel-to-bedknife contact, regardless of whether nor not the quality of cut had been acceptable. There must be light contact across the full length of the reel and bedknife (refer to *Adjusting Reel to Bedknife in* the Cutting Unit Operator's Manual).

CHECK THE TORQUE OF THE WHEEL NUTS

WARNING

Torque the wheel nuts to 54–68 Nm after 1–4 hours of operation and again after 10 hours of operation and every 200 hours thereafter. Failure to maintain proper torque could result in failure or wheel loss, and may result in personal injury.

Controls

Traction Pedal (Fig. 8)—The traction pedal has three functions: 1) to make the machine move forward, 2) to move it backward and 3) to stop the machine. Depress the top of the pedal to move forward and the bottom of the pedal to move backward or to assist in stopping when moving forward. Also, allow the pedal to move to the neutral position to stop the machine. Do not rest your heel of foot on reverse, when operating forward (Fig. 9).

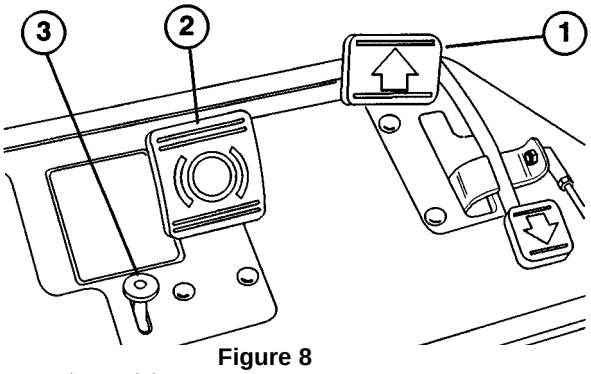

Figure 8

1. Traction pedal
2. Brake pedal
3. Parking brake latch

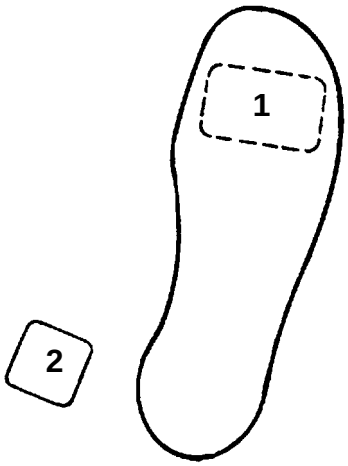

Figure 9

1. Forward
2. Reverse

Brake Pedal (Fig. 8)—The brake pedal actuates an automotive drum-type mechanical brake located at each traction wheel.

Parking Brake Button (Fig. 8)—Depressing the brake pedal to actuate the brake assembly, then depressing the small button indicated will keep the brakes actuated for parking. Disengage the parking brake by depressing the brake pedal. Form the habit of locking the parking brake before you leave the machine.

Throttle Control (Fig. 10)—The throttle controls the speed of the engine. Moving the Throttle Control toward the "FAST" position increases engine RPM; moving the throttle Control toward "SLOW" will decrease engine rpm.

Functional Control Lever (Fig. 10)—Provides two (2) traction selections, plus a "NEUTRAL" position. It is permissible to shift from mow to transport or from transport to mow (not to neutral) while the Greensmaster 3200-D is in motion. No damage will result.

1. Rear Position—Neutral and backlapping.

2. Middle Position—Used for mowing operation.

3. Front Position—Used for transport operation.

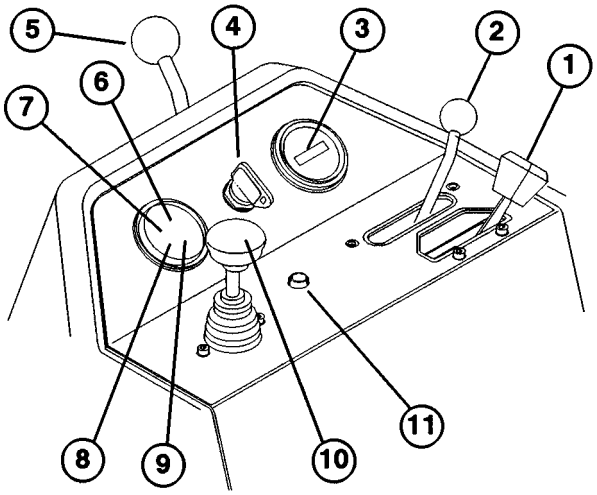

Figure 10

1. Throttle control
2. Functional control lever
3. Hour meter
4. Ignition switch
5. Steering arm locking lever
6. Water temperature light
7. Engine oil pressure light
8. Battery warning light
9. Glow plug light
10. Raise/Lower/Mow control
11. High temperature override button

Hour Meter (Fig. 10)—Indicates the total hours of machine operation. The hour meter starts to function whenever the key switch is turned to "ON".

Ignition Switch (Fig. 10)—Insert the key into the switch, turn it clockwise as far as possible to the "START" position to start the engine. Release the key as soon as the engine starts; the key will move to the "ON" position. Turn the key counter-clockwise to "OFF" position to stop the engine.

Steering Arm Locking Lever (Fig. 10)—Rotate the lever rearward to loosen adjustment, raise or lower the steering arm for operator comfort, then, rotate the lever

forward to tighten adjustment.

Water Temperature Light (Fig. 10)—This light glows and the engine automatically shuts-down when the engine coolant temperature gets too high.

High-Temperature Override Button (Fig. 10)—If the engine kills due to an over heat condition, press the override button in and hold it there until the machine can be moved to a safe location and allowed to cool down.

Note: When using the override button, it must be held down continuously to operate. Do not use it for extended periods of time.

Glow Plug Indicator Light (Fig. 10)—When lit, this light indicates the glow plugs are on.

Battery Warning Light (Fig. 10)—Light glows if the battery charge is low.

Oil Pressure Light (Fig. 10)—Light glows if the engine oil pressure drops below a safe level.

Raise/Lower/Mow Control (Fig. 10)—Moving this control forward during operation lowers the cutting units and starts the reels. Pull back on the control to stop the reels and raise the cutting units. During operation, the reels can be stopped by pulling back on the control momentarily, then releasing it. Restart the reels by moving the control forward.

SEAT ADJUSTING HANDLE (Fig. 11)—The lever on the left side of the seat allows seven-inch fore and aft adjustment.

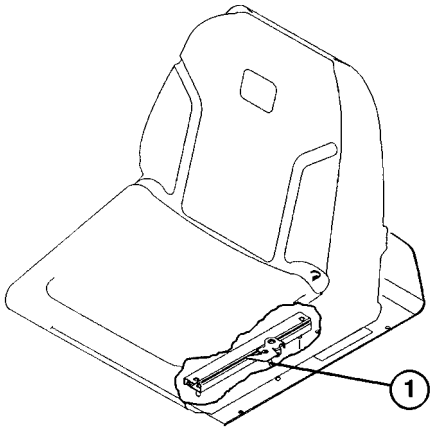

Figure 11

1. Seat adjusting handle

FUEL SHUT-OFF VALVES (Fig. 12 & 13)— Close the fuel shut-off valves under the fuel tank and above the fuel filter when storing the machine.

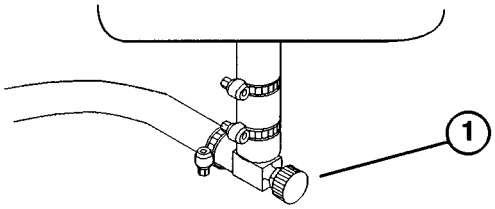

Figure 12

1. Fuel shut off (under fuel tank)

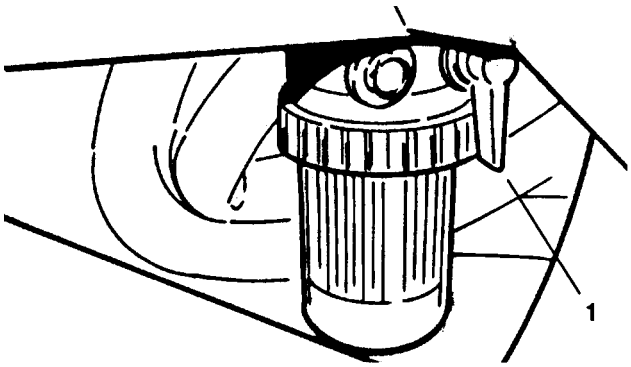

Figure 13

1. Fuel shut off (on fuel tank)

Operation

BREAK-IN PERIOD

1. Only 8 hours of mowing operation is required for the Greensmaster 3200-D break-in period.

2. Since the first hours of operation are critical to future dependability of the machine, monitor its functions and performance closely so that minor difficulties, which could lead to major problems, are noted and can be corrected. Inspect the Greensmaster 3200-D frequently during break-in for signs of oil leakage, loose fasteners, or any other malfunction.

3. To assure optimum performance of the brake system, break-in the brakes before use: Firmly apply the brakes and drive the machine at mowing speed until the brakes are hot, as indicated by their smell. An adjustment to the brakes may be required after break-in.

STARTING INSTRUCTIONS

IMPORTANT: The fuel system may have to be bled if any of the following situations have occurred:

A. Initial start up of a new engine.

B. The engine has ceased running due to lack of fuel.

C. Maintenance has been performed upon fuel system components; i.e., filter replaced, etc.

Refer to Bleeding the Fuel System

1. Be sure parking brake is set, the raise/lower/mow control is disengaged and the functional control is in neutral position.

2. Remove your foot from the traction pedal and make sure the pedal is in neutral.

3. Move the throttle lever to the full-throttle position.

4. Insert the key into the switch, turn it to the ON position and hold it there until the glow plug indicator light goes off (approximately 6 seconds).

5. Immediately turn the key to START. Release the key when the engine starts and allow it to move to the ON position. Move the throttle control to the SLOW position.

IMPORTANT: To prevent overheating the starter motor, do not engage the starter longer than 10 seconds. After 10 seconds of continuous cranking, wait 60 seconds before engaging the starter again.

6. When the engine is started for the first time, or after overhaul of the engine, operate the machine in forward and reverse for one to two minutes.

Turn the steering wheel to the left and right to check steering response. Then shut the engine off and check for oil leaks, loose parts and any other noticeable malfunctions.

CAUTION

Shut off the engine and wait for all moving parts to stop before checking for oil leaks, loose parts and other malfunctions.

7. To stop the engine, move the throttle control to the SLOW position, make sure the raise/lower/mow control is disengaged and the functional control is in the neutral position. Turn the starter key to OFF. Remove the key from the switch to prevent accidental starting.

8. Close the fuel shut off valves before storing the machine.

BLEEDING THE FUEL SYSTEM (Fig. 14 & 15)

1. Park the machine on a level surface. Make sure the fuel tank is at least half full.

2. Open the fuel shut-off valve under the fuel tank and on the fuel filter.

DANGER

Because diesel fuel is flammable, use caution when storing or handling it. Do not smoke while filling the fuel tank. Do not fill fuel the tank while engine is running, hot, or when the machine is in an enclosed area. Always fill the fuel tank outside and wipe up any spilled diesel fuel before starting the engine. Store fuel in a clean, safety-approved container and keep the cap in place. Use diesel fuel for the engine only; not for any other purpose.

3. Open (2) bleed screws on the side of the fuel filter mounting head, allowing the bowl to re-fill with fuel. Close the bleed screws when the bowl is filled.

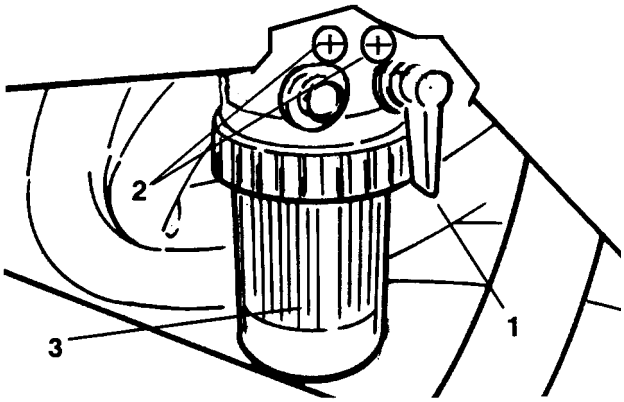

Figure 14

1. Fuel shut off
2. Bleed screws (2)
3. Bowl

4. On the front of the engine (by the oil filter) locate transfer pump inlet screw. Note the angle of the fitting on transfer pump inlet and loosen the screw (left screw only).

5. When a steady stream of fuel flows out of the pump screw, tighten the screw, retaining the angle of the fitting before it was loosened.

6. Loosen the injection pump inlet screw on the front of the engine.

7. Pump the priming lever until a steady stream of fuel flows out of the injection pump inlet screw, then tighten the screw.

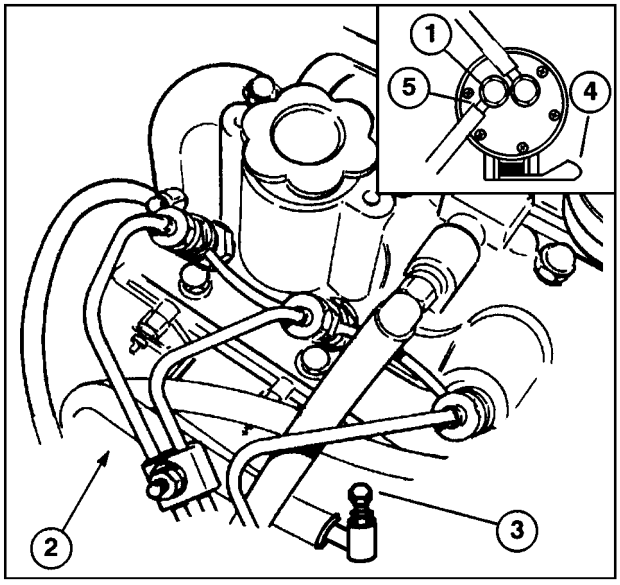

Figure 15

1. Transfer pump screw
2. Transfer pump inlet screw location
3. Injection pump inlet screw
4. Priming lever
5. Note fitting angle

CHECK INTERLOCK SYSTEM OPERATION

The purpose of the interlock system is to prevent the engine from cranking or operating the traction pedal if the functional control lever is not in neutral. Also, the engine will shut off if operator leaves seat without the functional control lever in neutral. Reels will shut-off if the functional control lever is moved to neutral or transport. Perform the following system checks daily to be sure the interlock system is operating correctly.

1. Sit on the seat, engage the parking brake, move the functional control lever to neutral and try to depress the traction pedal. The pedal should not depress, which means the interlock system is operating correctly. Correct problem if the system is not operating properly.

2. Sit on the seat, engage the parking brake, put the traction pedal in neutral, the functional control lever in mow or transport and try to start the engine. The engine should not crank, which means the interlock system is operating correctly. Correct the problem if the system is not operating properly.

3. Sit on the seat and start the engine. Move the functional control lever to mow and rise off seat. The engine should kill, which means the interlock system is operating correctly. Correct the problem

if the system is not operating properly.

4. Sit on the seat, engage the parking brake, put the traction pedal in neutral, the functional control lever in neutral and start the engine. Move the raise/lower - mow control forward to lower the cutting units but they should not start rotating, which means the interlock system is operating correctly. Correct the problem if the system is not operating properly.

⚠ CAUTION

Do not disconnect the interlock switches. Check switch operation daily to assure the interlock system is operating correctly. If a switch is malfunctioning, replace it before operating the machine. To ensure maximum safety, replace all switches after every two years.

PREPARING THE MACHINE FOR MOWING

To assist in aligning the machine for successive cutting passes, it is suggested the following be done to the No. 2 and No. 3 cutting unit baskets:

1. Measure in approximately 1**2.**5 cm from the outer edge of each basket.

2. Either place a strip of white tape or paint a line onto each basket paralleling the outer edge of each basket (Fig. 16)

TRAINING PERIOD

Before mowing greens with the GREENSMASTER 3200-D, The Toro Company suggests that you find a clear area and practice starting and stopping, raising and lowering cutting units, turning, etc. This training period will be beneficial to the operator in gaining confidence in the performance of the GREENSMASTER 3200-D.

CAUTION: This product may exceed noise levels of 85 dB(A) at the operator position. Ear protectors are recommended, for prolonged exposure, to reduce the potential of permanent hearing damage.

Figure 16

1. Alignment strip

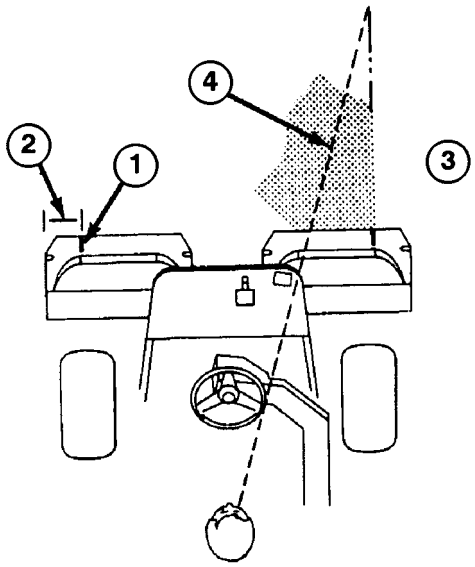

2. Approximately 12 cm
3. Cut grass on the right
4. Keep focal spot 2–3 meters ahead of the machine

BEFORE MOWING

Inspect the green for debris, remove the flag from the cup, and determine the direction best to mow. Base the direction to mow on the previous mowing direction. Always mow in an alternate pattern from the previous mowing, so that the grass blades will be less apt to lay down and therefore be difficult to trap between the reel blades and bed knife.

MOWING PROCEDURES

1. Approach the green with the functional control lever in the MOW position. Start on one edge of the green so the ribbon procedure of cutting may be used. This holds compaction to a minimum and leaves a neat, attractive pattern on the greens.

2. Actuate the raise/lower-mow lever as the front edge of the grass baskets cross the outer edge of the green. This procedure drops the cutting units to the turf and starts the reels.

Note: The No. 1 (rear) cutting unit reel will not start until all the cutting units are on the ground and No. 2 and No. 3 cutting units are cutting.

IMPORTANT: Familiarize yourself with the fact that the No. 1 cutting unit reel is delayed and therefore, you should practice to try to gain the required timing necessary to minimize the

cleanup mowing operation.

3. Overlap a minimal amount with the previous cut on return passes. To assist in maintaining a straight line across the green and keep the machine an equal distance from the edge of the previous cut, establish an imaginary sight line approximately 2 to 3 meters ahead of the machine to the edge of the uncut portion of the green. Some find it useful to include the outer edge of the steering wheel as part of the sight line; i.e., keep the steering wheel edge aligned with a point that is always kept the same distance away from the front of the machine.

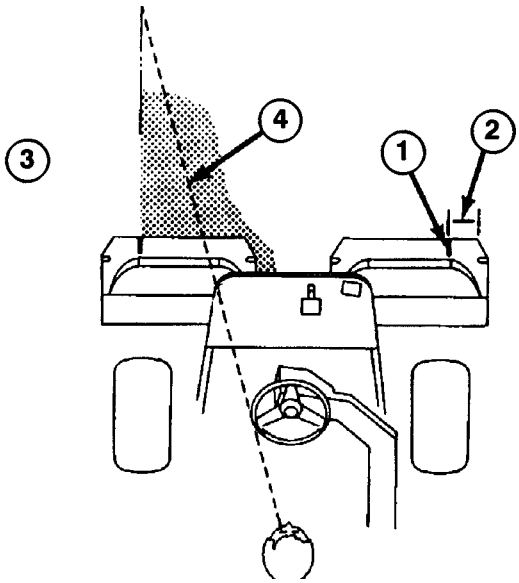

Figure 17

1. Alignment strip
2. Approximately 12 cm
3. Cut grass on the left
4. Keep focal spot 2–3 meters ahead of the machine

4. As the front of the baskets cross the edge of the green, pull back on the raise/lower-mow lever. This will stop the reels and lift the cutting units. Timing of this procedure is important, so the mowers do not cut into the fringe area. However, as much of the green as possible should be cut to minimize the amount of grass left to mow around the outer periphery.

5. Cut down on operating time and ease lineup for the next pass by momentarily turning the machine in the opposite direction, then turning in the direction of the uncut portion; i.e., if intending to turn right, first swing slightly left, then right. This will assist in getting the machine more quickly aligned for the next pass. Follow the same procedure for turning in the opposite direction. It's good practice to try to make as short a turn as possible. However, turn in a wider arc during warmer weather to minimize the possibility of bruising the turf.

IMPORTANT: The Greensmaster 3200-D should never be stopped on a green with the cutting unit reels operating as damage to the turf may result. Stopping on a wet green with the Greensmaster 3200-D may leave marks or indentations from the wheels.

6. Finish cutting the green by mowing the outer periphery. Be sure to change the direction of cutting from the previous mowing. Always keep weather and turf conditions in mind and be sure to change the direction of mowing from the previous cutting. Replace the flag.

7. Empty the grass baskets of all clippings before transporting to the next green. Heavy wet clippings place an undue strain on the baskets and will add unnecessary weight to the machine, thereby increasing the load on the engine, hydraulic system, brakes, etc.

TRANSPORT OPERATION

Make sure the cutting units are in the full up position. Move the functional control lever to the TRANSPORT position. Use the brakes to slow the machine while going down steep hills to avoid loss of control. Always approach rough areas at a reduced speed and cross severe undulations carefully. Familiarize yourself with the width of the Greensmaster 3200-D. Do not attempt to pass between objects that are close together so that costly damage and down time can be prevented.

INSPECTION AND CLEAN-UP AFTER MOWING

At the completion of mowing operation, thoroughly wash the machine with a garden hose without a nozzle so excessive water pressure will not cause contamination and damage to seals and bearings. After cleaning, inspect the machine for possible hydraulic fluid leaks, damage or wear to hydraulic and mechanical components and check the cutting units for sharpness. Also, lubricate the mow and lift pedal and brake shaft assembly with SAE 30 oil or spray lubricant to deter corrosion and help keep the machine performing satisfactorily during the next mowing operation.

TOWING THE TRACTION UNIT

In case of emergency, the Greensmaster 3200-D can be towed for a short distance. However, Toro does not recommend this as a standard procedure.

IMPORTANT: Do not tow the machine faster than 3–5 kmh because drive system may be damaged. If the machine must be moved a considerable distance, transport it on a truck or trailer.

1. Locate the by-pass valve on the pump and rotate it 90°.

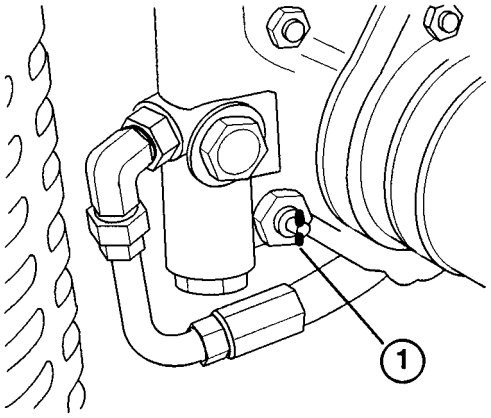

Figure 18

1. By-pass valve

2. Before starting the engine, close by-pass valve by rotating it 90°. Do not start the engine when valve is open.

Maintenance

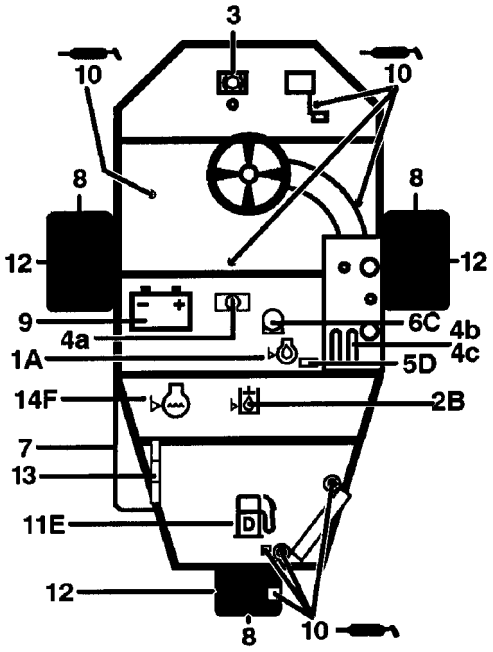

Quick Reference Aid

Check/service (daily)

1. Oil Level, engine
2. Oil level, hydraulic tank
3. Brake function
4. Interlock system:
   - 4a. Seat interlock
   - 4b. Neutral sensor
   - 4c. Mow sensor
5. Water separator/fuel filter belts
6. Air cleaner
7. Radiator screen
8. Tire pressure
9. Battery
10. Grease point (8)
11. Fuel
12. Wheel nut torque
13. Fan/alternator/water pump

See operator's manual for initial change	Fluid Type	Capacity (L)	Fluid Change Interval	Filter Change Interval	Filter Part Number
Engine Oil	SAE 10W-30CD	3.0	50 hours	100 hours	85-4930
Hydraulic Oil*	Mobil DTE 424	20.8	800 hours	800 hours	75-1310
Air Cleaner				200 hours	93-2196
Fuel Filter				200 hours	Perkins 130366040
Fuel Tank	No. 2 Diesel	22.7	Drain and flush, 2 years		
Coolant	50/50 Ethylene glycol/water mix	3.4	Drain and flush, 2 years		

Maintenance Schedule

Maintenance Procedure	Maintenance Interval & Service				
	Every 50 hours	Every 100 hours	Every 200 hours	Every 400 hours	Every 800 hours
Check battery fluid level Check battery cable connections Service the air filter Lubricate all grease fittings †Change the engine oil †Check alternator fan belt tension	✓				
†Replace the engine oil filter		✓	✓	✓	✓
Replace the air filter element Torque the wheel lug nuts			✓	✓	✓
Replace the fuel filter ‡Torque the heads and adjust the valves				✓	✓
‡Replace the hydraulic oil ‡Relplace the hydraulic oil filter ‡Check the engine RPM (idle and full throttle)					✓

†Initial break in at 8 hours
‡Initial break in at 50 hours

Replace moving hoses Replace safety switches Fuel tank—drain and flush Hydraulic tank—drain and flush Cooling system—drain and flush	**Recommendations** Items are recommended every 2000 hours or 2 years, whichever occurs first.

Daily Maintenance Checklist

- ✓ Safety Interlock Operation
- ✓ Brake Operation
- ✓ Engine Oil & Fuel Level
- ✓ Cooling system Fluid Level
- ✓ Radiator & Screen for Debris
- ✓ Unusual Engine Noises
- ✓ Unusual Operating Noises
- ✓ Hydraulic System Oil Level
- ✓ Hydraulic Hoses for Damage
- ✓ Fluid Leaks
- ✓ Tire Pressure
- ✓ Instrument Operations
- ✓ Lubricate All Grease Fittings
- ✓ Touch-up Damaged Paint

LUBRICATION

CAUTION

Before servicing or making adjustments to the machine, stop the engine and remove the key from the switch.

The traction unit has grease fittings that must be lubricated regularly with No. 2 General Purpose Lithium Base Grease. If the machine is operated under normal conditions, lubricate all bearings and bushings after every 50 hours of operation. Lubricate the fittings immediately after every washing, regardless of the interval listed.

The traction unit bearings and bushings that must be lubricated are: Rear wheel hub (1), Castor bearing (1), Steering cylinder (2) (Fig. 19), Lift arms (3) (Fig. 20), Traction pedal pivot (1)
(Fig. 21).

1. Wipe grease fitting clean so foreign matter cannot be forced into the bearing or bushing.

2. Pump grease into the bearing or bushing.

3. Wipe up excess grease.

4. Apply grease to reel motor spline shaft and onto lift arm when cutting unit is removed for service.

5. Apply a few drops of SAE 30 engine oil or spray lubricant (WD 40) to all pivot points daily after cleaning.

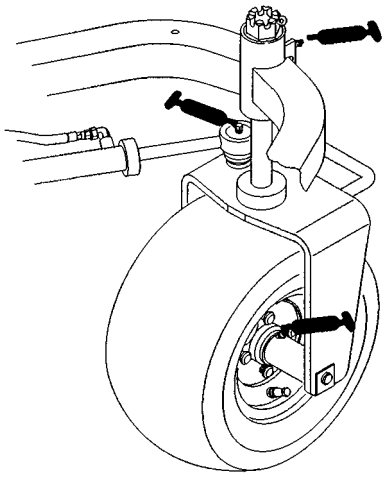

Figure 19

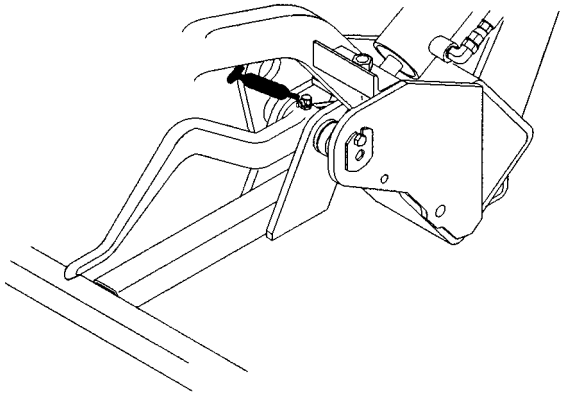

Figure 20

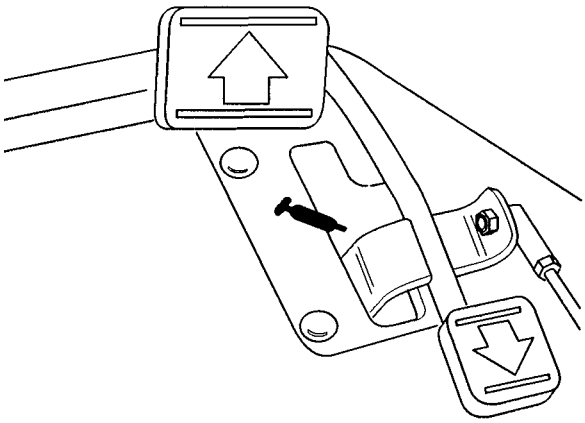

Figure 21

GENERAL AIR CLEANER MAINTENANCE

⚠ CAUTION

Before servicing or making adjustments to the machine, stop the engine and remove the key from the switch.

1. Check the air cleaner body for damage which could possibly cause an air leak. Replace a damaged air cleaner body.

2. Service the air cleaner filter every 200 hours (more frequently in extreme dusty or dirty conditions).

SERVICING THE AIR CLEANER (Fig. 22)

1. Release the latches securing air cleaner cover to air cleaner body. Separate the cover from the body. Clean the inside of air cleaner cover.

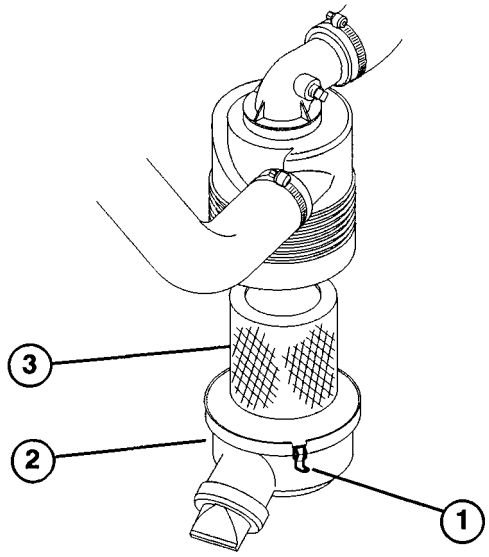

Figure 22

1. Air cleaner latches
2. Dust cup
3. Filter

2. Gently slide the filter out of the air cleaner body to reduce the amount of dust dislodged. Avoid knocking the filter against the air cleaner body.

3. Inspect the filter and discard if damaged. Do not wash or reuse a damaged filter.

Washing Method

A. Prepare a solution of the filter cleaner and water and soak the filter element about 15 minutes. Refer to directions on the filter cleaner carton for complete information.

B. After soaking the filter for 15 minutes, rinse it with clear water. Maximum water pressure must not exceed 276 kPa to prevent damage to the filter element. Rinse the filter from clean side to dirty to side.

C. Dry the filter element using warm, flowing air (71° F max), or allow element to air-dry. Do not use a light bulb to dry the filter element because damage could result.

Compressed Air Method

A. Blow compressed air from inside to the outside of dry filter element. Do not exceed 689 kPa to prevent damage to the element.

B. Keep the air hose nozzle at least 5 cm from the filter and move the nozzle up and down while rotating the filter element. Inspect for holes and tears by looking through the filter toward a bright light.

5. Inspect the new filter for shipping damage. Check sealing end of the filter. Do not install a damaged filter.

6. Insert a new filter properly into the air cleaner body. Make sure the filter is sealed properly by applying pressure to outer rim of the filter when installing. Do not press on flexible center of the filter.

7. Reinstall the cover and secure the latches.

CLEANING THE RADIATOR AND SCREEN (Fig. 23)

To prevent the system from overheating, radiator screen and radiator must be kept clean. Check and clean the screen and radiator daily and, if necessary, hourly clean any debris off these parts. Clean these components more frequently in dusty dirty conditions.

1. Remove the radiator screen.

2. Working from the fan side of the radiator, blow out the radiator with compressed air.

3. Clean the screen and re-install.

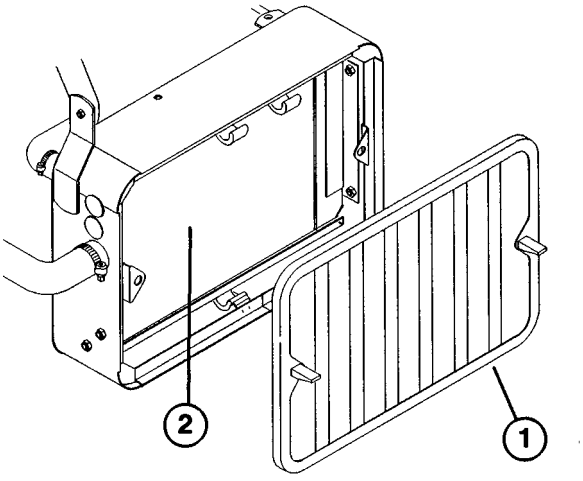

Figure 23

1. Radiator screen
2. Radiator

CHANGING THE ENGINE OIL AND FILTER (Fig. 24)

Change the oil and filter initially after the first 8 hours of operation, thereafter change the oil every 50 hours and filter every 100 hours.

1. Remove the drain plug and let the oil flow into the drain pan. When the oil stops, install the drain plug.

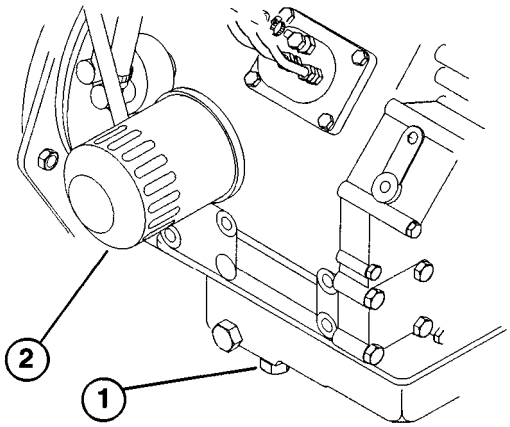

Figure 24

1. Drain plug
2. Oil filter

2. Remove the oil filter. Apply a light coat of clean oil to the new filter gasket.

DANGER

Because diesel fuel is highly flammable, use caution when storing or handling it. Do not smoke while filling the fuel tank. Do not fill the fuel tank while the engine is running, hot, or when th in an enclosed area. Always fill the fuel tank outside and wipe up any spilled diesel fuel before starting the engine. Store fuel in a clean, safety-approved container and keep the cap in place. Use diesel fuel for the engine only; not for any other purpose.

3. Screw the filter on by hand until the gasket contacts the filter adapter, then tighten 1/2 to 3/4 turn further. DO NOT OVER-TIGHTEN.

4. Add oil to the crankcase, refer to *Check the Engine Oil*.

5. Dispose of the oil properly.

REPLACING THE FUEL FILTER (Fig. 25)

Inspect the fuel filter bowl, daily, for water or other contaminants. If water or other contaminants are present, they must be removed before commencing operation.

1. Close the fuel shut-off valve above the filter.

2. Unscrew the nut securing the bowl to the filter head. Remove water or other contaminants from the bowl.

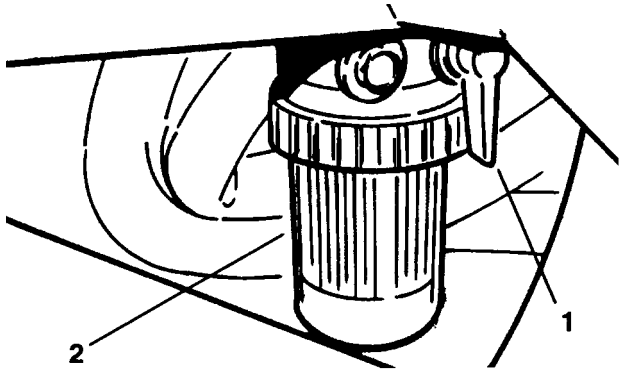

Figure 25

1. Fuel shut-off valve
2. Fuel filter

3. Remove and inspect the fuel filter. Replace if dirty.

4. Re-install bowl to the filter head. Make sure O-ring is positioned properly between bowl mounting nut and the filter head.

5. Open the fuel shut-off above the filter.

6. Open the bleed screw on the filter mounting head to re-fill the bowl with fuel. Close the bleed screw.

CHANGING THE HYDRAULIC OIL AND FILTER (Fig. 26)

Initially change the hydraulic oil filter after the first 50 operating hours. After that, change the hydraulic oil and filter after every 800 operating hours. If the oil becomes contaminated, contact your local TORO distributor because the system must be flushed. Contaminated oil looks milky or black when compared to clean oil.

1. Clean the area around the filter mounting area. Place the drain pan under the filter and remove the filter.

   Note: If the oil is not going to be drained, disconnect and plug hydraulic line going to the filter.

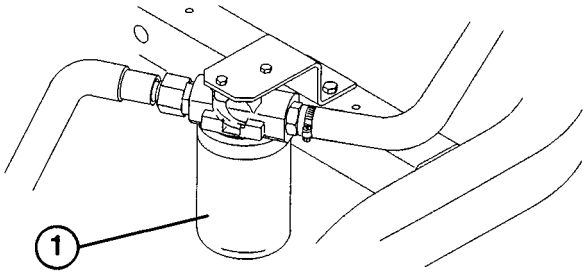

Figure 26

1. Hydraulic filter

2. Fill the replacement filter with Mobil 424 hydraulic fluid, lubricate the sealing gasket and hand turn until the gasket contacts the filter head. Then tighten 3/4 turn further. The filter should now be sealed.

3. Fill the hydraulic reservoir with 20.8 L of hydraulic oil. Refer to *Check the Hydraulic System*.

4. Start the machine and run it at idle for 3 to 5 minutes to circulate the fluid and remove any air trapped in the system. Stop the machine and recheck the fluid level.

5. Dispose of the oil properly.

CHECKING HYDRAULIC LINES AND HOSES

Inspect hydraulic lines and hoses daily for leaks, kinked lines, loose mounting supports, wear, loose fittings, weather deterioration and chemical deterioration. Make all necessary repairs before operating.

WARNING

Keep your body and hands away from pin hole leaks or nozzles that eject high-pressure hydraulic fluid. Use cardboard or paper to find hydraulic leaks. Hydraulic fluid escaping under pressure can penetrate your skin and cause injury. Fluid accidentally injected into your skin must be surgically removed within a few hours by a doctor familiar with this form of injury or gangrene may result.

ADJUSTING CUTTING UNIT LIFT/DROP

The machine's cutting unit lift/drop circuit is equipped with a flow control valve. This valve is preset at the factory at 3 turns open, but an adjustment may be required to compensate for differences in hydraulic oil temperatures, mowing spreads, etc. If an adjustment is required, proceed as follows:

1. Allow hydraulic oil to reach full operating temperature before adjusting the flow control valve.

2. Raise the seat and find the flow control valve mounted to the hydraulic cylinder.

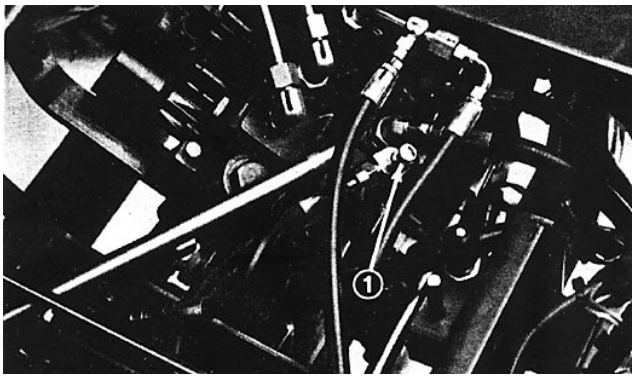

Figure 27

1. Flow control valve

3. Loosen the set screw in the adjusting knob on the flow control.

4. If the center cutting unit is dropping too late, turn the knob 1/4 turn counterclockwise. If the center cutting unit is dropping too early, turn the knob 1/4 turn clockwise.

5. After you have achieved your desired setting, tighten the set screw.

ADJUST VALVE CLEARANCE

Initially, adjust valves after the first 50 hours of operation, thereafter every 400 hours.

1. Remove the breather hose and cylinder head cover from the engine.

   Note: Adjust valves when the engine is cold. Set the No. 1 cylinder to top dead center and adjust the clearances of intake/exhaust valves of No. 1 cylinder and exhaust valve of No. 2 cylinder. Then, turn the crankshaft counterclockwise 240° (viewed from front) to adjust clearance of intake valve of No. 2 cylinder and intake/exhaust valves of No. 3 cylinder.

2. Loosen the nut and adjust clearance of both intake and exhaust valves to .0078" (.2mm).

3. Install the cylinder head cover and gasket. Torque the screws to 9–12 Nm. Install the breather hose.

TORQUE CYLINDER HEAD BOLTS

Initially, check head bolt torque after the first 50 hours of operation, thereafter every 400 hours.

1. Remove the breather hose and cylinder head cover from the engine.

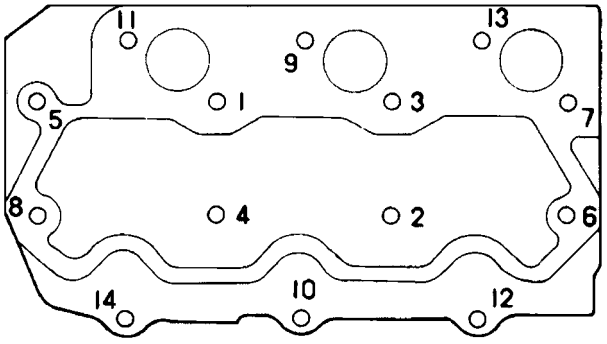

Figure 28

2. Using the sequence in Figure 28, torque the head bolts to 48 to 51 Nm.

3. Install the cylinder head cover and gasket. Torque the cover screws to 9–12 Nm. Install the breather hose.

BATTERY CARE

1. Battery electrolyte level must be properly maintained and the top of the battery kept clean. if the machine is stored in a location where temperatures are extremely high, the battery will run down more rapidly than if the machine is stored in a location where temperatures are cool.

2. Check the electrolyte level every 50 operating hours or, if the machine is in storage, every 30 days.

3. Maintain cell level with distilled or demineralized water. Do not fill cells above the bottom of the split ring inside each cell. Install the filler caps with vents pointing to the rear (toward the fuel tank).

⚠ CAUTION

Wear safety goggles and rubber gloves when working with electrolyte. Charge the battery in a well ventilated place so gases produced while charging can dissipate. Since the gases are explosive, keep open flames and electrical spark away from the battery; do not smoke. Nausea may result if the gases are inhaled. Unplug the charger from the electrical outlet before connecting to or disconnecting charger leads from battery posts.

4. Keep the top of battery clean by washing periodically with a brush dipped in ammonia or bicarbonate of soda solution. Flush the top surface with water after cleaning. Do not remove the fill caps while cleaning.

5. Battery cables must be tight on the terminals to provide good electrical contact.

⚠ WARNING

Connecting cables to the wrong post could result in personal injury and/or damage to the electrical system.

6. If corrosion occurs at the terminals, disconnect cables, negative (–) cable first and scrape clamps and terminals separately. Reconnect cables, positive (+) cable first and coat terminals with petroleum jelly.

7. Always disconnect battery cables, ground cable (–) first, to prevent possible wiring damage from short outs whenever working with the electrical system.

BATTERY STORAGE

If the machine will be stored more than 30 days, remove the battery and charge it fully. Either store it on the shelf on the machine. Leave the cables disconnected if stored on the machine. Store the battery in a cool atmosphere to avoid quick deterioration of the charge in the battery. To prevent the battery from freezing, make sure it is fully charged. The specific gravity of a fully charged battery is 1.265–1.299.

FUSES (Fig. 29)

The fuses in the machine's electrical system are located under the seat.

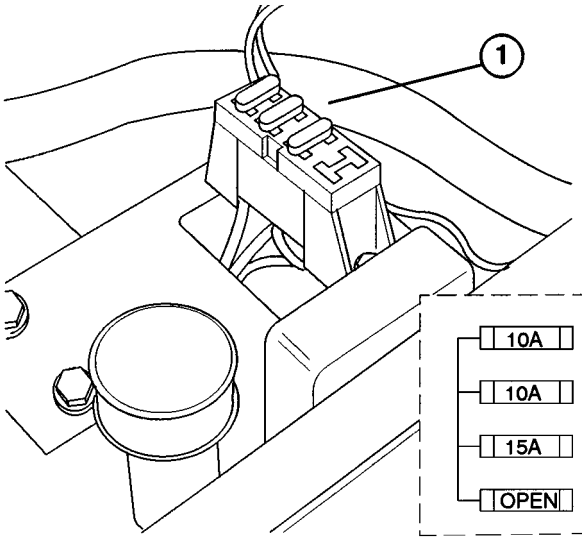

Figure 29

1. Fuses

IDENTIFICATION AND ORDERING

MODEL AND SERIAL NUMBER

The mower has two identification numbers: a model number and a serial number. The two numbers are stamped into a plate that is riveted to the left frame rail under seat. In any correspondence concerning the mower, supply the model and serial numbers to assure that correct information and replacement parts are obtained.

Note: Do not order by reference number if a parts catalog is being used; use the part number.

To order replacement parts from an Authorized TORO Service Dealer, supply the following information:

1. Model and serial numbers of the mower.

2. Part number, description and quantity of part(s) desired.


TORO®