Form No. 3326–490

Mid–Size Mower

Proline Hydro 15 HP with 52 in. Side Discharge Mower

Model No. 30292—210005001 and Up

Operator’s Manual

Warning

The engine exhaust from this product contains chemicals known to the State of California to cause cancer, birth defects, or other reproductive harm.

Important This engine is not equipped with a spark arrester muffler. It is a violation of California Public Resource Code Section 4442 to use or operate this engine on any forest–covered, brush–covered or grass–covered land. Other states or federal areas may have similar laws.

This spark ignition system complies with Canadian ICES-002.

Ce système d'allumage par étincelle de véhicule est conforme à la norme NMB-002 du Canada.

The enclosed Engine Owner's Manual is supplied for information regarding The U.S. Environmental Protection Agency (EPA) and the California Emission Control Regulation of emission systems, maintenance and warranty.

Keep this engine Owner's Manual with your unit. Should this engine Owner's Manual become damaged or illegible, replace immediately. Replacements may be ordered through the engine manufacturer.

Contents

	Page
Introduction	3
Safety	3
Safe Operating Practices	3
Toro Mower Safety	4
Slope Chart	7
Safety and Instruction Decals	9
Gasoline and Oil	13
Recommended Gasoline	13
Using Stabilizer/Conditioner	13
Filling the Fuel Tank	13
Check Engine Oil Level	13
Set Up	14
Loose Parts	14
Installing Fuel Tank and Fuel Line	14
Installing Upper Handle	15
Installing Control Rods	15
Checking the Hydraulic Fluid	17
Installing Hairpin Cotter Pins	17
Operation	17
Think Safety First	18
Controls	18
Starting and Stopping the Engine	18
Operating Mower Blade Control (PTO)	19
Understanding the Safety Interlock System	20
Driving Forward or Backward	20
Bringing Machine to Neutral Position	21
Stopping the Machine	21
Pushing the Machine by Hand	21
Transporting Machines	22
Using Side Discharge or Mulch Grass	22
Adjusting Height-of-Cut	22
Adjusting Gage Wheels	23
Adjusting Center Gage Wheels	23
Maintenance	24
Recommended Maintenance Schedule	24
Servicing the Air Cleaner	25
Servicing the Engine Oil	26
Servicing the Spark Plug	27
Greasing and Lubrication	28
Cleaning the Cooling System	29
Checking Tire Pressure	29
Servicing the Fuel Tank	30
Servicing the Fuel Filter	30
Servicing the Hydraulic System	31
Adjusting the By-pass Valve	32
Adjusting Neutral	33
Adjusting the Electric Clutch	34
Servicing the Fuse	34
Servicing the Cutting Blade	35
Correcting Cutting Unit Mismatch	36
Setting Up the Frame	36
Checking the Deck Front-to-Rear Pitch	38
Changing the Deck Front-to-Rear Pitch	38
Checking the Mower Side-to-Side Level	39
Changing the Mower Side-to-Side Level	39
Matching Height of Cut	39
Replacing the Traction Belt	40
Replacing the Deck Belt	40
Replacing the PTO Drive Belt	41
Replacing the Caster Wheel Fork Bushings	41
Servicing the Caster Wheel and Bearings	42
Replacing the Grass Deflector	43
Wiring Diagram	44
Hydraulic Diagram	45
Cleaning and Storage	46
Troubleshooting	46
The Toro Total Coverage Guarantee	49

© 2001 by The Toro Company

8111 Lyndale Avenue South
Bloomington, MN 55420-1196

All Rights Reserved

Printed in the USA

Introduction

Read this manual carefully to learn how to operate and maintain your product properly. The information in this manual can help you and others avoid injury and product damage. Although Toro designs and produces safe products, you are responsible for operating the product properly and safely.

Whenever you need service, genuine Toro parts, or additional information, contact an Authorized Service Dealer or Toro Customer Service and have the model and serial numbers of your product ready. Figure 1 illustrates the location of the model and serial numbers on the product.

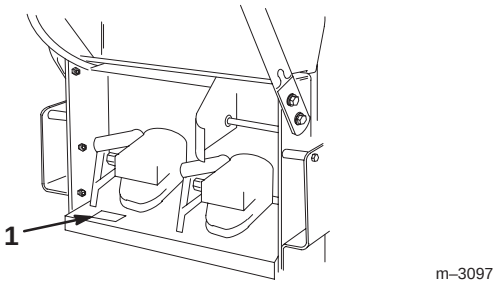

Figure 1

1. Location of the model and serial numbers

Write the product model and serial numbers in the space below:

Model No. _____

Serial No. _____

This manual identifies potential hazards and has special safety messages that help you and others avoid personal injury and even death. ***Danger***, ***Warning***, and ***Caution*** are signal words used to identify the level of hazard. However, regardless of the hazard, be extremely careful.

Danger signals an extreme hazard that *will* cause serious injury or death if you do not follow the recommended precautions.

Warning signals a hazard that *may* cause serious injury or death if you do not follow the recommended precautions.

Caution signals a hazard that may cause minor or moderate injury if you do not follow the recommended precautions.

This manual uses two other words to highlight information. **Important** calls attention to special mechanical information and **Note:** emphasizes general information worthy of special attention.

Safety

Note: The addition of attachments made by other manufacturers that do not meet American National Standards Institute certification will cause noncompliance of this machine.

Improper use or maintenance by the operator or owner can result in injury. To reduce the potential for injury, comply with these safety instructions and always pay attention to the safety alert ⚠ symbol, which means CAUTION, WARNING, or DANGER—"personal safety instruction." Failure to comply with the instruction may result in personal injury or death.

Safe Operating Practices

The following instructions are from ANSI standard B71.4—1999.

Training

- Read the Operator's Manual and other training material. If the operator(s) or mechanic(s) can not read English it is the owner's responsibility to explain this material to them.
- Become familiar with the safe operation of the equipment, operator controls, and safety signs.
- All operators and mechanics should be trained. The owner is responsible for training the users.
- Never let children or untrained people operate or service the equipment. Local regulations may restrict the age of the operator.
- The owner/user can prevent and is responsible for accidents or injuries occurring to himself or herself, other people or property.

Preparation

- Evaluate the terrain to determine what accessories and attachments are needed to properly and safely perform the job. Only use accessories and attachments approved by the manufacturer.
- Wear appropriate clothing including hard hat, safety glasses and ear protection. Long hair, loose clothing or jewelry may get tangled in moving parts.
- Inspect the area where the equipment is to be used and remove all objects such as rocks, toys and wire which can be thrown by the machine.
- Use extra care when handling gasoline and other fuels. They are flammable and vapors are explosive.
    - Use only an approved container

- Never remove gas cap or add fuel with engine running. Allow engine to cool before refueling. Do not smoke.
- Never refuel or drain the machine indoors.

- Check that operator's presence controls, safety switches and shields are attached and functioning properly. Do not operate unless they are functioning properly.

Operation

- Never run an engine in an enclosed area.
- Only operate in good light, keeping away from holes and hidden hazards.
- Be sure all drives are in neutral and wheels are chocked and blocked before starting engine. Only start engine from the operator's position.
- Slow down and use extra care on hillsides. Be sure to travel side–to–side on hillsides. Turf conditions can affect the machine's stability. Use caution while operating near drop–offs.
- Slow down and use caution when making turns and when changing directions on slopes.
- Never raise deck with the blades running.
- Never operate with the PTO shield, or other guards not securely in place. Be sure all interlocks are attached, adjusted properly, and functioning property.
- Never operate with the discharge deflector raised, removed or altered, unless using a grass catcher.
- Do not change the engine governor setting or overspeed the engine.
- Stop on level ground, disengage drives, chock or block wheels, shut off engine before leaving the operator's position for any reason including emptying the catchers or unclogging the chute.
- Stop equipment and inspect blades after striking objects or if an abnormal vibration occurs. Make necessary repairs before resuming operations.
- Keep hands and feet away from the cutting unit.
- Look behind and down before backing up to be sure of a clear path.
- Keep pets and bystanders away.
- Slow down and use caution when making turns and crossing roads and sidewalks. Stop blades if not mowing.
- Be aware of the mower discharge direction and do not point it at anyone.
- Do not operate the mower under the influence of alcohol or drugs
- Use care when loading or unloading the machine into or from a trailer or truck
- Use care when approaching blind corners, shrubs, trees, or other objects that may obscure vision.

Maintenance and storage

- Disengage drives, chock or block wheels, stop engine and remove key or disconnect spark plug wire. Wait for all movement to stop before adjusting, cleaning or repairing.
- Clean grass and debris from cutting unit, drives, mufflers, and engine to help prevent fires. Clean up oil or fuel spillage.
- Let engine cool before storing and do not store near flame.
- Shut off fuel while storing or transporting. Do not store fuel near flames or drain indoors.
- Park machine on level ground. Chock or block wheels when it is parked. Never allow untrained personnel to service machine.
- Use jack stands to support components when required.
- Carefully release pressure from components with stored energy.
- Disconnect battery or remove spark plug wire before making any repairs. Disconnect the negative terminal first and the positive last. Reconnect positive first and negative last.
- Use care when checking blades. Wrap the blade(s) or wear gloves, and use caution when servicing them. Only replace blades. Never straighten or weld them.
- Keep hands and feet away from moving parts. If possible, do not make adjustments with the engine running.
- Charge batteries in an open well ventilated area, away from spark and flames. Unplug charger before connecting or disconnecting from battery. Wear protective clothing and use insulated tools.
- Keep all parts in good working condition and all hardware tightened. Replace all worn or damaged decals.

Toro Mower Safety

The following list contains safety information specific to Toro products or other safety information that you must know that is not included in the ANSI standards.

This product is capable of amputating hands and feet and throwing objects. Always follow all safety instructions to avoid serious injury or death.

This product is designed for cutting and recycling grass or, when equipped with a grass bagger, for catching cut grass. Any use for purposes other than these could prove dangerous to user and bystanders.

General Operation

- Allow only responsible adults who are familiar with the instructions to operate the machine.
- Be sure the area is clear of other people before mowing. Stop the machine if anyone enters the area.
- Do not mow in reverse unless absolutely necessary. Always look down and behind before and while backing.
- Be aware of the mower discharge direction and do not point it at anyone. Do not operate the mower without either the entire grass catcher or the guard in place.
- Slow down before turning. Sharp turns on any terrain may cause loss of control.
- Turn off blades when not mowing.
- Keep hands, feet, hair and loose clothing away from attachment discharge area, underside of mower and any moving parts while engine is running.
- Stop the engine before removing the grass catcher or unclogging the chute.
- Mow only in daylight or good artificial light.
- Watch for traffic when operating near or crossing roadways.
- Do not touch equipment or attachment parts which may be hot from operation. Allow to cool before attempting to maintain, adjust or service.
- Use only Toro-approved attachments. Warranty may be voided if used with unapproved attachments.

Slope Operation

Slopes and ramps are a major factor related to loss-of-control and accidents, which can result in severe injury or death. All slopes and ramps require extra caution. If you feel uneasy on a slope, do not mow it.

DO

- Remove obstacles such as rocks, tree limbs, etc. from the mowing area. Watch for holes, ruts or bumps. Tall grass can hide obstacles.
- Use slow speed so that you will not have to stop while on the slope.
- Use extra care with grass catchers or other attachments. These can change the stability of the machine.
- Keep all movement on slopes slow and gradual. Do not make sudden changes in speed or direction.
- Avoid starting or stopping on a slope. If tires lose traction, disengage the blades.
- Check carefully for overhead clearances (i.e. branches, doorways, electrical wires) before driving under any objects and do not contact them.
- Mow slopes side–to–side.

DO NOT

- Do not mow slopes greater than 15 degrees.
- Avoid turning on slopes. If you must turn, turn slowly and gradually downhill, if possible.
- Do not mow near drop-offs, ditches, or embankments. The machine could suddenly turn over if a wheel goes over the edge of a cliff or ditch, or if an edge caves in.
- Do not mow on wet grass. Reduced traction could cause sliding.
- Do not use a grass catcher on steep slopes. Heavy grass bags could cause loss of control, of the machine.
- Do not mow up and down slopes.

Service

- Never store the machine or fuel container inside where there is an open flame, such as near a water heater or furnace.
- Keep nuts and bolts tight, especially the blade attachment bolts. Keep equipment in good condition.
- Never tamper with safety devices. Check safety systems for proper operation before each use.
- Use only genuine replacement parts to ensure that original standards are maintained.
- Battery acid is poisonous and can cause burns. Avoid contact with skin, eyes and clothing. Protect your face, eyes and clothing when working with a battery.
- Battery gases can explode. Keep cigarettes, sparks and flames away from battery.
- Hydraulic fluid escaping under pressure can penetrate the skin and cause injury. Use cardboard or paper to find hydraulic leaks. Never use your hands.

Slope Chart

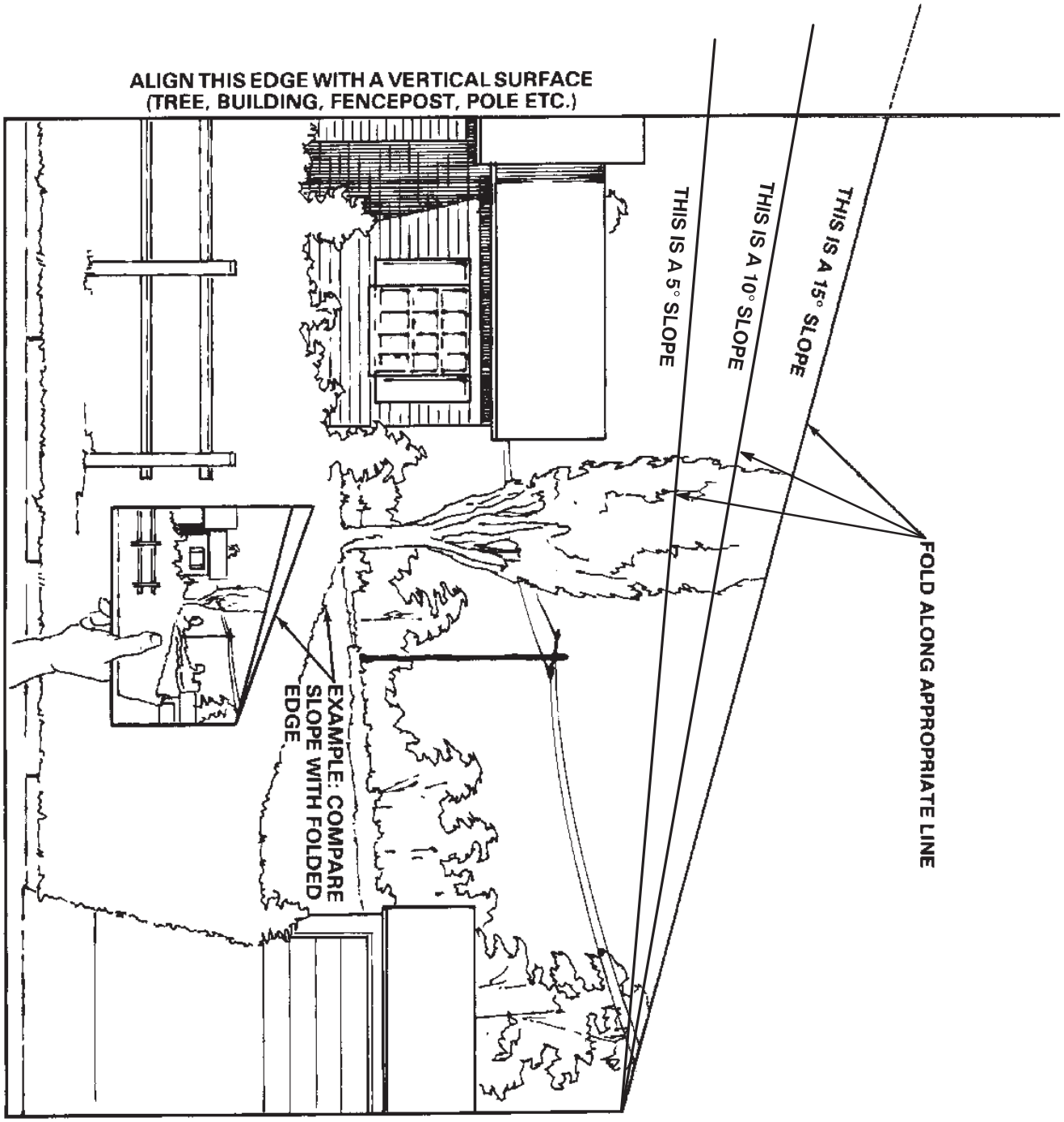
ALIGN THIS EDGE WITH A VERTICAL SURFACE
(TREE, BUILDING, FENCEPOST, POLE ETC.)
THIS IS A 5° SLOPE
THIS IS A 10° SLOPE
THIS IS A 15° SLOPE
FOLD ALONG APPROPRIATE LINE
EXAMPLE: COMPARE SLOPE WITH FOLDED EDGE

Safety and Instruction Decals

Safety decals and instructions are easily visible to the operator and are located near any area of potential danger. Replace any decal that is damaged or lost.



82–4590



67–5360



66–1340



43–8480

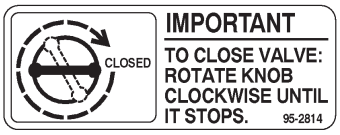

95–2814



63–8440

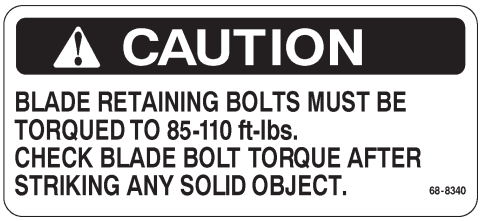

68–8340



54–9220



1–523552



98–0776



98–4387

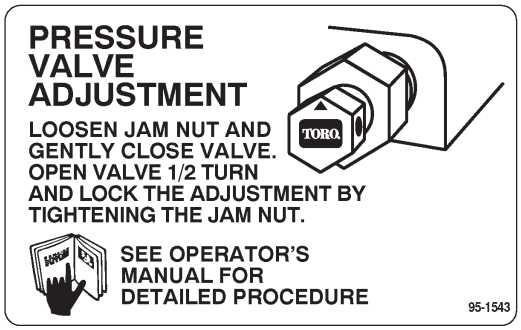

95–1543



104–8569

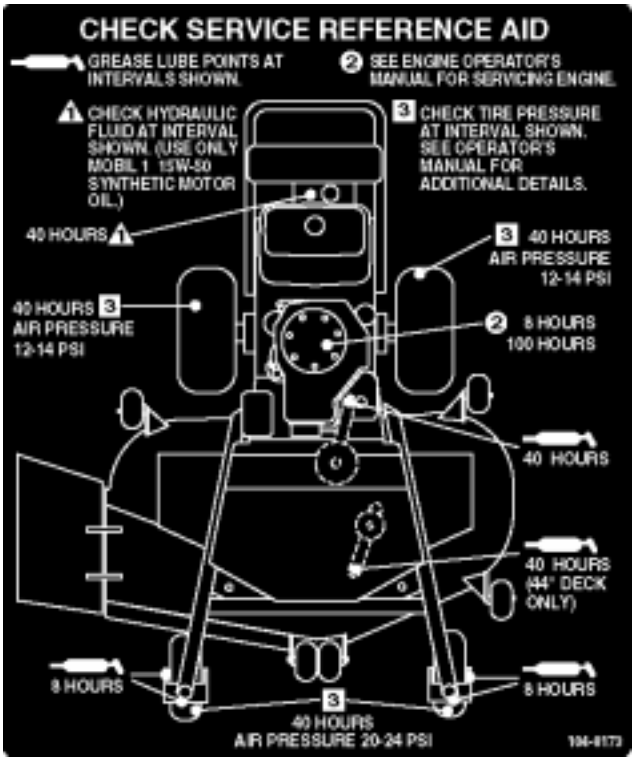

104–8173



104–8172

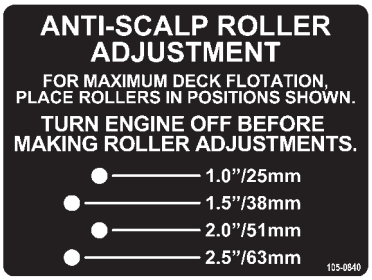

105–0840

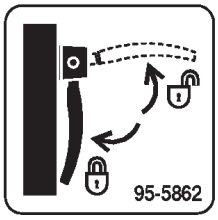

95–5862

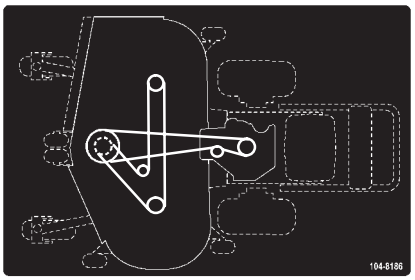

104–8186



95–1523



95–1544

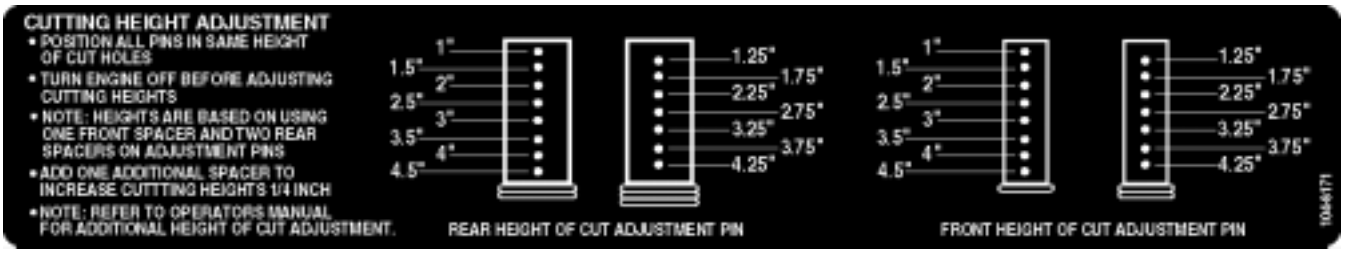

104–8171


CHOKE
FAST
STOP
OFF
RUN
SLOW
ENGINE
SPEED
IGNITION
104-8196
BLADE
ENGAGEMENT
①
②
ProLine

104–8196

Gasoline and Oil

Recommended Gasoline

Use UNLEADED Regular Gasoline suitable for automotive use (85 pump octane minimum). Leaded regular gasoline may be used if unleaded regular is not available.

Important Never use methanol, gasoline containing methanol, or gasohol containing more than 10% ethanol because the fuel system could be damaged. Do not mix oil with gasoline.

Danger

In certain conditions, gasoline is extremely flammable and highly explosive. A fire or explosion from gasoline can burn you and others and can damage property.

- **Fill the fuel tank outdoors, in an open area, when the engine is cold. Wipe up any gasoline that spills.**
- **Do not fill the fuel tank completely full. Add gasoline to the fuel tank until the level is 1/4″ to 1/2″ (6 mm to 13 mm) below the bottom of the filler neck. This empty space in the tank allows gasoline to expand.**
- **Never smoke when handling gasoline, and stay away from an open flame or where gasoline fumes may be ignited by a spark.**
- **Store gasoline in an approved container and keep it out of the reach of children. Never buy more than a 30-day supply of gasoline.**
- **Always place gasoline containers on the ground away from your vehicle before filling.**
- **Do not fill gasoline containers inside a vehicle or on a truck or trailer bed because interior carpets or plastic truck bed liners may insulate the container and slow the loss of any static charge.**
- **When practical, remove gas–powered equipment from the truck or trailer and refuel the equipment with its wheels on the ground.**
- **If this is not possible, then refuel such equipment on a truck or trailer from a portable container, rather than from a gasoline dispenser nozzle.**
- **If a gasoline dispenser nozzle must be used, keep the nozzle in contact with the rim of the fuel tank or container opening at all times until fueling is complete.**

Warning

Gasoline is harmful or fatal if swallowed. Long–term exposure to vapors can cause serious injury and illness.

- **Avoid prolonged breathing of vapors.**
- **Keep face away from nozzle and gas tank or conditioner opening.**
- **Keep gas away from eyes and skin.**

Using Stabilizer/Conditioner

Use a fuel stabilizer/conditioner in the machine to provide the following benefits:

- Keeps gasoline fresh during storage of 90 days or less. For longer storage it is recommended that the fuel tank be drained.
- Cleans the engine while it runs
- Eliminates gum-like varnish buildup in the fuel system, which causes hard starting

Important Do not use fuel additives containing methanol or ethanol.

Add the correct amount of gas stabilizer/conditioner to the gas.

Note: A fuel stabilizer/conditioner is most effective when mixed with fresh gasoline. To minimize the chance of varnish deposits in the fuel system, use fuel stabilizer at all times.

Filling the Fuel Tank

1. Shut the engine off and chock or block tires.
2. Clean around the fuel tank cap and remove the cap. Add unleaded regular gasoline to fuel tank, until the level is 1/4 to 1/2 inch (6 mm to 13 mm) below the bottom of the filler neck. This space in the tank allows gasoline to expand. Do not fill the fuel tank completely full.
3. Install fuel tank cap securely. Wipe up any gasoline that may have spilled.

Check Engine Oil Level

Before you start the engine and use the machine, check the oil level in the engine crankcase; refer to Checking Oil Level, page 26.

Set Up

Loose Parts

Note: Use the chart below to verify all parts have been shipped.

DESCRIPTION	QTY.	USE
Fuel tank	1	
Bolt 5/16 x 7/8 in. (22.5 mm)	2	
Lock washer 5/16 in.	2	
Washer 5/16 in.	4	Installing fuel tank and fuel line
Stud	2	
Spring	2	
Hose clamp	1	
Upper handle	1	
Flanged bolt 3/8 x 1 in. (26 mm)	4	Installing upper handle to frame
Flange nut 3/8 in.	4	
Clevis pin	1	
Washer	1	Installing control rods
Hairpin cotter	2	
Hairpin cotter pin	2	Installing hairpin cotter pins
Operator's Manual	1	Read before operating machine
Engine Operator's Manual	1	Read before operating machine
Parts Catalog	1	
Registration card	1	Fill out and return to Toro

Installing Fuel Tank and Fuel Line

1. Align fuel tank to top of rear frame and secure fuel tank right side with 2 bolts (5/16 x 7/8 in.), 2 lock washers (5/16 in.) and 2 washers (5/16) (Fig. 2).
2. Secure fuel tank left side to frame with 2 studs (5/16 x 7/8 in.), 2 washers (5/16 in.), 2 springs and 2 locknuts (5/16 in.) (Fig. 2).

Note: Tighten left side until it is completely tight and then unscrew locknut one full turn. This will allow the spring to work.

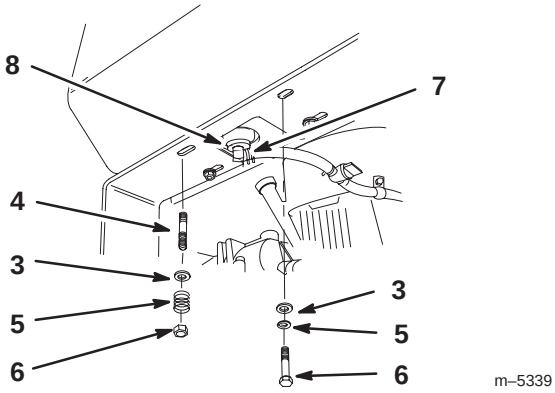

Figure 2

1. Bolt, 5/8 x 7/8 in. (22.5 mm)
2. Lock washer, 5/16 in.
3. Washer, 5/16 in.
4. Stud
5. Spring
6. Locknut
7. Hose clamp
8. Fuel tank connection

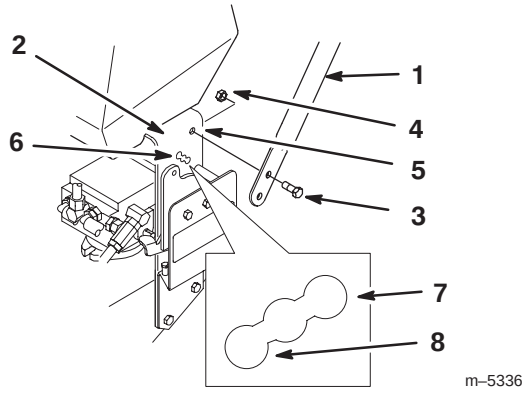

Figure 3

1. Upper handle
2. Rear frame
3. Flange bolt, 3/8 x 1 in.
4. Flange nut, 3/8 in.
5. Upper mounting hole
6. Lower mounting hole
7. Low position
8. High position

3. Slide the hose clamp onto the fuel line (Fig. 2).

4. Push the fuel line onto the fuel tank connection and secure it with a hose clamp (Fig. 2).

Installing Upper Handle

1. Align upper handle with upper mounting holes in rear frame (Fig. 3).

2. Secure each upper mounting hole with a flange bolt (3/8 x 1 in. (26mm)) and flange nut (Fig. 3). Torque bolts to 25 ft. lbs. (34 N.m).

3. Select high, medium or low position for the lower mounting hole (Fig. 3). This allows the upper handle to be adjusted to the user's height preference.

4. Secure each lower mounting hole with a flange bolt (3/8 x 1 in. (26mm)) and flange nut (Fig. 3). Torque bolts to 25 ft. lbs. (34 N.m).

Installing Control Rods

Before installing and adjusting control rods loosen quick release levers and move reference control bar all the way forward.

Installing Left Control Rod

1. Slide clevis pin through rod fitting and mounting hole in control bracket (from outside). Secure with washer and hairpin cotter (Fig. 5).

2. Remove hairpin cotter and rod from upper control bars (Fig. 4).

3. Press and hold upper control bars against reference bar, so stop hits (Fig. 4).

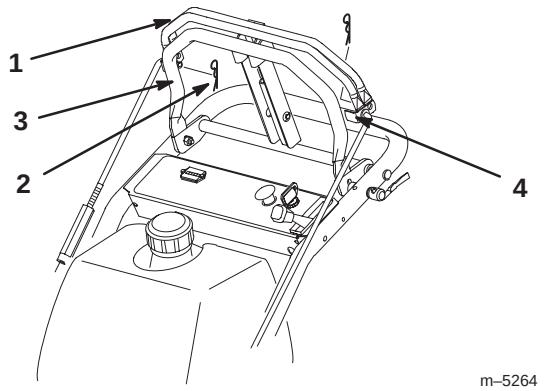

Figure 4

1. Upper control bars
2. Hairpin cotter
3. Reference bar
4. Stop

---

4. Push rod full forward until bearing is against control bracket stop. Thread rod in or out of fitting on control bracket until rod aligns with holes in upper control bars (Fig. 5).
5. When rod and holes in upper control bars line up, turn rod one additional turn, so rod is shorter.

Note: Upper control bar stop must hit reference bar before roller bearing hits control bracket stop.

6. Connect rod to upper control bars with previously removed hairpin cotter (Fig. 4).

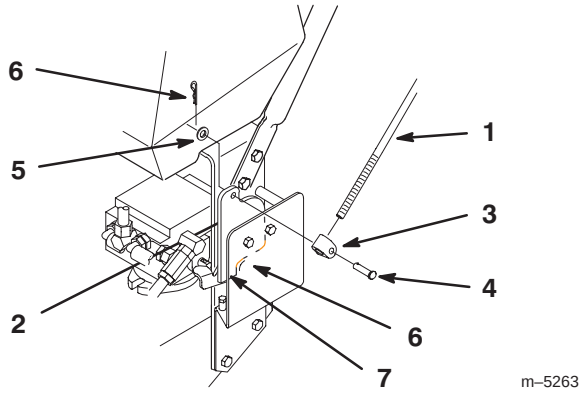

Figure 5

1. Control rod–left
2. Control bracket
3. Rod fitting
4. Clevis pin
5. washer
6. Hairpin cotter
7. Control bracket stop
8. Roller bearing

Installing Right Control Rod

1. Slide rod into control bracket and secure with hairpin cotter (Fig. 6).
2. Remove hairpin cotter and rod from upper control bars (Fig. 4).
3. Press and hold upper control bars against reference bar, so stop hits (Fig. 4).
4. Push rod full forward until bearing is against control bracket stop. Loosen wing nut and thread turnbuckle in or out until rod aligns with holes in upper control bars (Fig. 6).
5. When rod and holes in upper control bars line up, rotate turnbuckle one additional turn, so rod is shorter.

Note: Upper control bar stop must hit reference bar before roller bearing hits control bracket stop.

6. Connect rod to upper control bars with previously removed hairpin cotter, tighten wing nut and turnbuckle (Fig. 4).

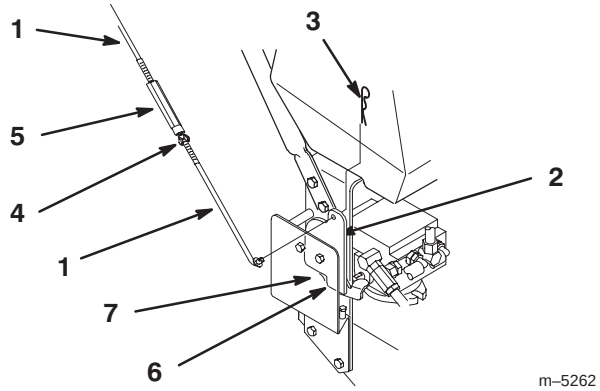

Figure 6

1. Control rod–right
2. Control bracket
3. Hairpin cotter
4. Wing nut
5. Turnbuckle
6. Control bracket stop
7. Roller bearing

Adjusting Tracking

1. After completing assembly check machine tracking. Operate machine by holding upper control bar against reference bar with wheel drive engaged.
2. If machine does not track straight, moves more right or left, adjustment is required.
3. Loosen wing nut on right control rod and rotate turnbuckle in or out to change tracking. Secure turnbuckle in position with wing nut (Fig. 6).
4. Check for proper tracking.

Note: Control rods must be adjusted if handle height position is changed.

5. Make sure the vent caps are installed in the battery. Charge the battery for 1 hour at 25 to 30 amps or 6 hours at 4 to 6 amps. Do not overcharge the battery.

Checking the Hydraulic Fluid

Check the hydraulic fluid level before engine is first started.

Fluid Type: Mobil 1® 15W-50 synthetic motor oil or equivalent synthetic oil.

Important Use oil specified or equivalent. Other fluids could cause system damage.

Hydraulic System Oil Capacity: 67 oz. (2.0 l)

1. Position machine on a level surface and chock or block tires.
2. Clean area around filler neck of hydraulic tank (Fig. 7).
3. Remove cap from filler neck. Look inside to check if there is fluid in the reservoir (Fig. 7).
4. If there is no fluid, add fluid to reservoir approximately a 1/4 in. (6mm) below the top of baffle.
5. Run the machine 15 minutes to allow any air to purge out of the system and warm fluid.
6. Recheck level while fluid is warm. Add fluid to raise level to top of the baffle, if required.

Note: Fluid level should be to the top of the baffle when fluid is warm (Fig. 7).

7. Install cap on filler neck.

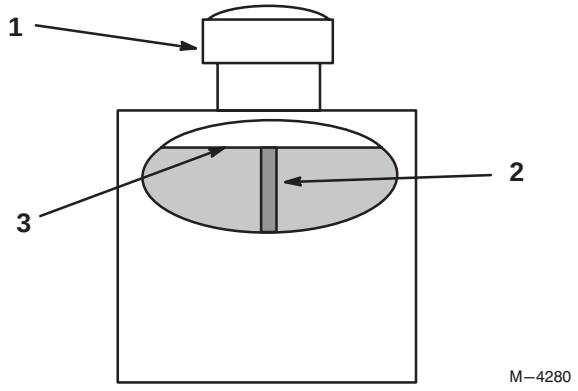

Figure 7

1. Cap
2. Baffle
3. Fluid level—full

Warning

Hydraulic fluid escaping under pressure can penetrate skin and cause injury.

- **If hydraulic fluid is injected into the skin it must be surgically removed within a few hours by a doctor familiar with this type of injury. Gangrene may result if this is not done.**
- **Keep body and hands away from pin hole leaks or nozzles that eject high pressure hydraulic fluid.**
- **Use cardboard or paper to find hydraulic leaks.**
- **Safely relieve all pressure in the hydraulic system before performing any work on the hydraulic system.**
- **Make sure all hydraulic fluid hoses and lines are in good condition and all hydraulic connections and fittings are tight before applying pressure to hydraulic system.**

Installing Hairpin Cotter Pins

Spare height–of–cut spacers may be stored on posts and retained by a hairpin cotter.

1. On opposite side of muffler, install extra hairpin cotter pins into front and rear height–of–cut pins (Fig. 8).

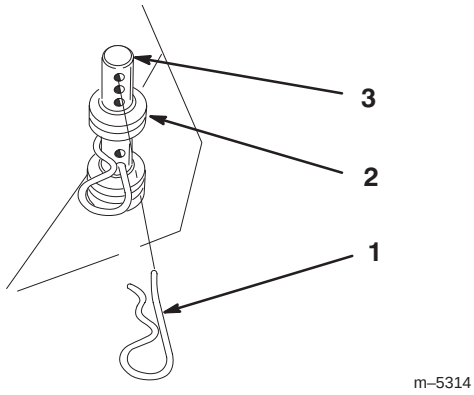

Figure 8

1. Hairpin cotter
2. Extra spacers
3. Height–of–cut post

Operation

Note: Determine the left and right sides of the machine from the normal operating position.

Think Safety First

Carefully read all the safety instructions and decals in the safety section. Knowing this information could help you, your family, pets or bystanders avoid injury.

The use of protective equipment for eyes, hearing, feet, hands and head is recommended.

Caution

This machine produces sound levels in excess of 85dBA at the operators ear and can cause hearing loss through extended periods of exposure.

Wear hearing protection when operating this machine.

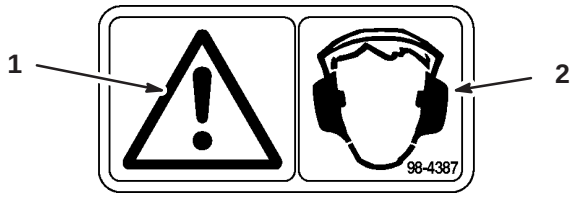

Figure 9

1. Caution
2. Wear hearing protection

Controls

Become familiar with all the controls (Fig. 10) before you start the engine and operate the machine.

Throttle Control – The throttle control has three positions: “FAST”, “SLOW” and “CHOKE”.

Blade Control Bail – Control bail used in conjunction with deck engagement switch (PTO) to release blade brake and engage clutch to drive mower blades. Release bail to disengage mower blades.

Blade Control Switch (PTO) – Pull switch used in conjunction with control bail to release blade brake and engage clutch to drive mower blades.

Upper Control Bar – Push forward on control bar to engage forward traction operation, release to stop. Pull back on control bar to go backwards. Release either side of control bar to turn right or left.

Reference Handle – Limits forward travel of control bar to pre-set position to help maintain desired ground speed and direction of travel. It is locked in position with quick release levers.

Ignition Switch – Key switch is used with the electric starter. Switch has three positions: “START”,“RUN” and “OFF”.

Fuel Shut–off Valve – (Under fuel tank) Close fuel shut–off valve when transporting or storing mower.

Hour Meter – Shows total hours that machine has been operated. This operates only when the mower blades are operating.

The hour meter will flash 3 hours before and after a service interval.

The service intervals are set for the first 8 hours, every 100 hours there after and every 400 hours.

Perform any recommended maintenance at these intervals. Refer to Recommended Maintenance Schedule on page 24.

Note: Make sure maintenance is done at all recommended intervals shown in the Recommended Maintenance Schedule on page 24.

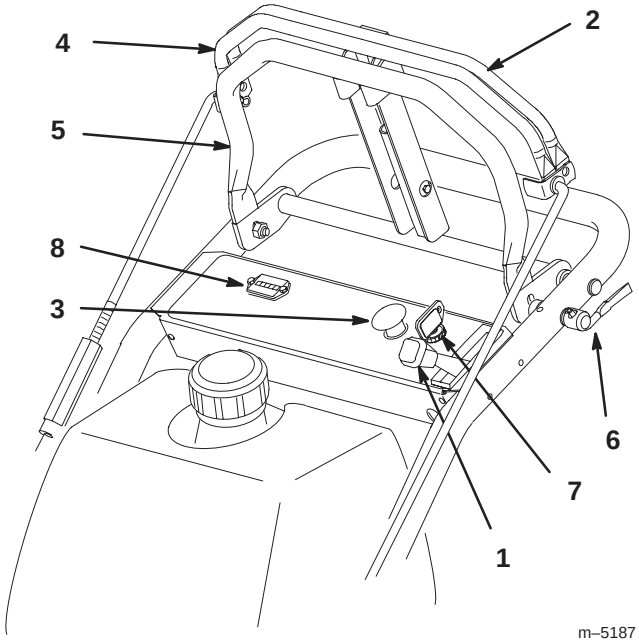

Figure 10

1. Throttle control
2. Blade control bail
3. Blade control switch (PTO)
4. Upper control bar
5. Reference handle
6. Quick release lever
7. Ignition switch
8. Hourmeter

Starting and Stopping the Engine

Starting Engine

1. Make sure spark plug wire(s) are installed on spark plug(s) and fuel valve is open.

2. Move the shift lever to neutral, set the parking brake and turn ignition key to RUN.

3. Move the throttle control to CHOKE position before starting a cold engine.

Note: A warm or hot engine usually does not require any choking. To start a warm engine, move throttle control to FAST position.

4. Grasp recoil starter handle firmly and pull out until positive engagement results; then pull handle vigorously to start engine and allow rope to recoil slowly.

Important Do not pull recoil rope to its limit or let go of the starter handle when rope is pulled out because rope may break or recoil assembly may be damaged.

Stopping Engine

1. Move the throttle lever to "SLOW" (Fig. 11).

2. Let engine idle for 30 to 60 seconds before turning the ignition key "OFF."

3. Turn the ignition key to "OFF" (Fig. 11).

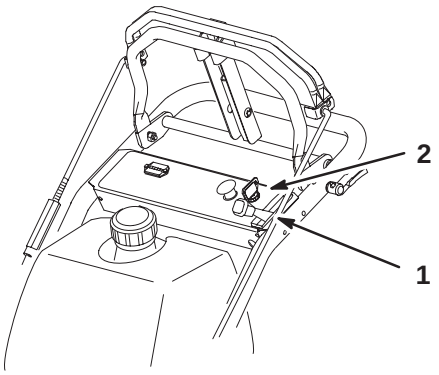

m–5187

Figure 11

1. Throttle lever
2. Ignition key

4. Set the parking brake.

5. Pull wire off spark plug(s) to prevent possibility of accidental starting before storing machine.

6. Close fuel shut off valve before storing machine.

Important Make sure fuel shut off valve is closed before transporting or storing machine, as fuel leakage may occur.

Operating Mower Blade Control (PTO)

The blade control switch (PTO) in conjunction with the blade control bail engages and disengages power to the electric clutch and mower blades.

Engaging the Mower Blades (PTO)

1. Release the upper control bar to stop the machine (Fig. 12).

2. To engage blade, squeeze blade control bail against upper control bar (Fig. 12).

3. Pull blade switch (PTO) up and release. Hold blade control bail against control bar while operating.

4. Repeat procedure to engage mower blades if blade control bail is released.

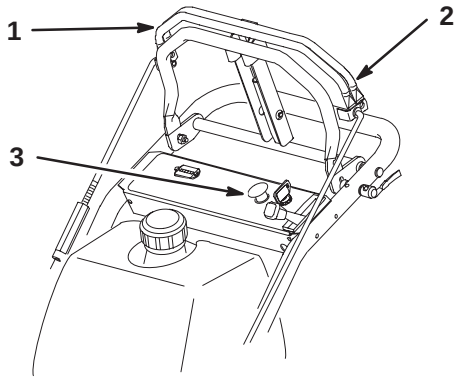

m–5187

Figure 12

1. Upper control bar
2. Blade control bail
3. Blade switch (PTO)

Disengaging the Mower Blades (PTO)

1. Release blade control bail to disengage blades (Fig. 12).

Understanding the Safety Interlock System

Caution

If safety interlock switches are disconnected or damaged the machine could operate unexpectedly causing personal injury.

- **Do not tamper with the interlock switches.**
- **Check the operation of the interlock switches daily and replace any damaged switches before operating the machine.**

The safety interlock system is designed to prevent the mower from starting unless the control bar is in the neutral position and to prevent the blades from rotating when the blade control is released.

Testing the Safety Interlock System

Test the safety interlock system before you use the machine each time. If the safety system does not operate as described, have an Authorized Service Dealer repair the safety system immediately.

1. Set the machine on a flat, open area.
2. Push the control bar full forward.
3. Rotate the ignition key to “START” and slowly move control bar back to neutral. Engine should not crank until control bar is within 5° of neutral position.
4. Start the engine, refer to Starting and Stopping the Engine on page 18. With engine running and control bar in neutral position, squeeze control bail against control bar (Do not pull up on blade switch), clutch should not engage and **blades must not rotate**.
5. Continue holding the blade control bail and pull the blade switch (PTO) up. The clutch should engage and the mower blades begin rotating.
6. Release the blade control bail. The clutch must disengage and the blades stop rotating.
7. Release the blade control bail (PTO), then pull up the blade switch without holding the blade control bail. The clutch must not engage and the **blades must not rotate**.
8. If all the above conditions are not met have an Authorized Service Dealer repair the safety system immediately.

Driving Forward or Backward

The Enhanced T–Bar control system is designed to provide easy and comfortable operation of the hydrostatic drive. The control regulates ground speed, as well as forward, reverse and neutral functions, as well as steering direction.

The throttle control regulates the engine speed as measured in rpm (revolutions per minute). Place the throttle control in the “FAST” position for best performance.

Operate the machine with the engine speed set at slow or medium when learning how to use the controls. Practice driving the machine in a level open area.

Adjusting Ground Speed

1. Place the quick release levers in the unlock position (Fig. 13).
2. Move the reference bar forward or backward to set the desired forward speed. The pointer indicates approximate ground speed. When the bar is in the full forward position the ground speed is approximately 6.5 mph. When the reference bar is in the middle position the ground speed is approximately 3 mph.

Note: In normal conditions, a 2.5 to 3.5 mph ground speed (middle position of the reference bar) is best for cutting performance. Use a faster ground speed for light cutting or transport. Use a slower ground speed in heavy cutting loads.

3. Place the quick release levers in the lock position (Fig. 13).

Driving Forward

1. To go forward, slowly press on the upper control bar against the reference bar (Fig. 13).
2. To go straight, apply equal pressure to both ends of the upper control bar (Fig. 13).
3. To turn, release pressure on the upper control bar side toward the direction you want to turn (Fig. 13).
4. Adjust reference bar to maintain a comfortable pre-set ground speed (Fig. 13).
5. To stop, release the upper control bar to stop both wheels (Fig. 13).

Note: If the front of the deck lifts off the ground when the upper control bar is quickly pushed forward or the machine is unable to drive uphill, an adjustment may be needed. Refer to: Adjusting By-pass Valve.

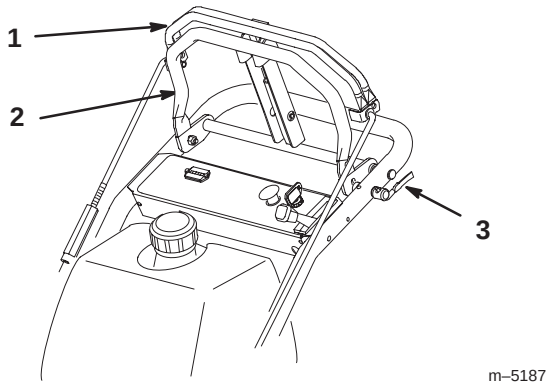

Figure 13

1. Upper control bar
2. Reference control bar
3. Quick release lever (locked position)

Driving Backward

1. To go backward, slowly pull the upper control bar rearward (Fig. 13).

2. To go straight, apply equal pressure to both ends of the upper control bar (Fig. 13).

3. To turn, release pressure on the upper control bar side away from the direction you want to turn (Fig. 13).

4. To stop, release the upper control bar to stop both wheels (Fig. 13).

Bringing Machine to Neutral Position

Release the upper control bar to stop. The machine will automatically return to neutral. When in neutral, the hydrostatic drive system will provide dynamic braking so the machine will not roll.

Note: Very slow drive motion with engine running and the control in neutral is normal. Excessive drive motion when the control is in neutral may indicate adjustment is needed. Refer to: Adjusting Neutral procedure.

Stopping the Machine

1. To stop, release the upper control bar to stop both wheels (Fig. 13).

2. Release the blade control bail (PTO), to stop the mower blades. Move the engine speed throttle control to “SLOW”.

3. Turn the ignition key to “OFF” to stop the engine. Remember to remove the key from the ignition switch.

Important If the machine is on a slope, chock or block the wheels to prevent the machine from slowly rolling.

Important If the machine will be left unattended, close the fuel shut off valve and disconnect the wire(s) from the spark plug(s).

Caution

Children or bystanders may be injured if they move or attempt to operate the machine while it is unattended.

Always remove the ignition key and chock or block tires when leaving the machine unattended, even if just for a few minutes.

Pushing the Machine by Hand

The by–pass valve also allows the machine to be pushed by hand with the engine not running for easier servicing. If the by–pass valve is opened to push the machine by hand, adjustment is required for operation.

Important Always push the machine by hand. Never tow the machine because hydraulic damage may occur.

Pushing the Machine

1. Disengage the power take off (PTO) and turn the ignition key to “OFF” to stop the engine.

2. Loosen jam nuts and rotate by-pass valves open 5 turns to push. This allows hydraulic fluid to by-pass the pump and the wheels to turn (Fig. 14).

Important Rotate by-pass valve a maximum of 5 turns so the valve does not come out of the body causing fluid to run out.

Operating the Machine

If the by–pass valve is opened to push the machine by hand, adjustment is required for operation. Refer to: “Adjusting By-pass Valve” on page 32.

.

Note: The machine will not drive unless by-pass valves are properly adjusted.

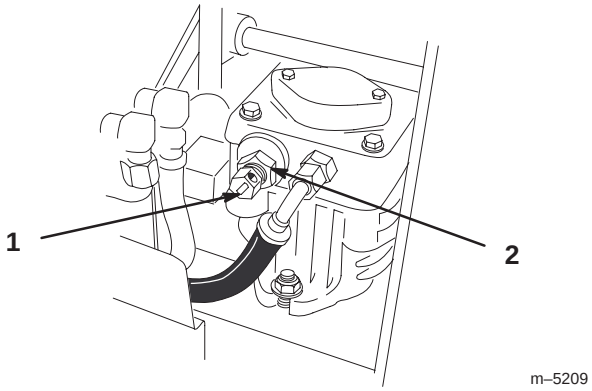

Figure 14

1. By-pass valve
2. Jam nut

Transporting Machines

Use a heavy-duty trailer or truck to transport the machine. Ensure that the trailer or truck has all necessary lighting and marking as required by law. Please carefully read all the safety instructions. Knowing this information could help you, your family, pets or bystanders avoid injury.

To transport the machine:

- Chock or block wheels.
- Securely fasten the machine to the trailer or truck with straps, chains, cable, or ropes.
- Secure a trailer to towing vehicle with safety chains.

Using Side Discharge or Mulch Grass

This mower has a hinged grass deflector that disperses clippings to the side and down toward the turf.

Danger

Without the grass deflector, discharge cover, or complete grass catcher assembly mounted in place, you and others are exposed to blade contact and thrown debris. Contact with rotating mower blade(s) and thrown debris will cause injury or death.

- **Never remove the grass deflector from the mower because the grass deflector routes material down toward the turf. If the grass deflector is ever damaged, replace it immediately.**
- **Never put your hands or feet under the mower.**
- **Never try to clear discharge area or mower blades unless you release the bail and the power take off (PTO) is off. Rotate the ignition key to "OFF." Also remove the key and pull the wire off the spark plug(s).**

Adjusting Height-of-Cut

The height-of-cut can be adjusted from 1 to 4-1/2in. (25 to 115 mm) in 1/4 in. (6 mm) increments. Adjustment is done by relocating four hairpin cotter pins in different hole location and by adding or removing spacers.

Note: Rear height–of–cut pins need at least one spacer or damage can occur to bushing if none are used.

1. To adjust, remove hairpin cotter from height-of-cut post (Fig. 15).
2. Select hole in height-of-cut post corresponding to the height-of-cut desired (Fig. 15).
3. Lift on side of deck and remove hairpin cotter (Fig. 15).
4. Add or remove spacers, if needed, and then align holes and insert hairpin cotter (Fig. 15).

Note: Spare height–of–cut spacers may be stored on posts and retained by a hairpin cotter.

Important All four hairpin cotter pins must be in the same hole location and with the correct number of spacers for a level cut.



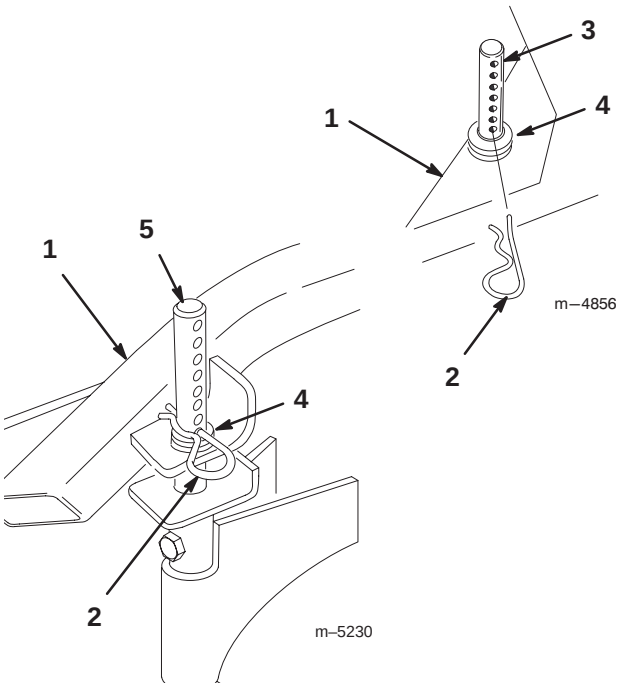

Figure 15

1. Carrier Frame
2. Hairpin Cotter
3. Front height–of–cut post
4. Spacers
5. Back height–of–cut post

Adjusting Gage Wheels

The gage wheels must be adjusted in the proper hole location for each height-of-cut position.

1. After adjusting height-of-cut, remove nut and washer while holding stud with wrench (Fig. 16).

Note: Do not remove the wheel nut and washer (Fig. 16).

2. Select a hole position so the gage wheel is a minimum of 3/8 in. (9.5 mm) off the ground for the height-of-cut to be used (Fig. 16).

3. Reinstall the stud nut and washer (Fig. 16).

4. Repeat adjustment on other gage wheels.

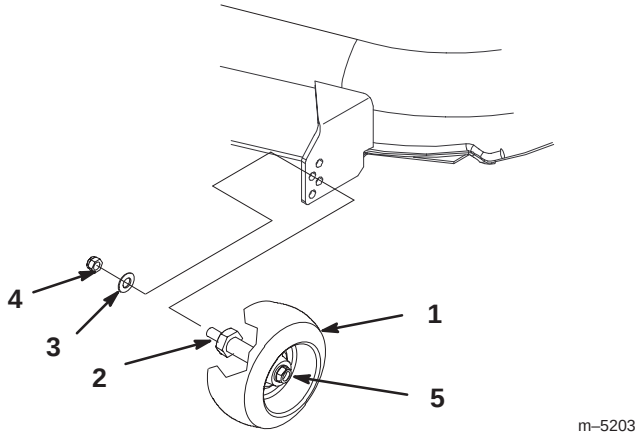

Figure 16

1. Gage Wheel
2. Stud
3. Washer
4. Nut
5. Wheel nut and washer. Do Not Remove.

Adjusting Center Gage Wheels

The gage wheels must be adjusted in the proper hole location for each height-of-cut position.

1. After adjusting height-of-cut remove bolt, washers and nut (Fig. 17).

2. Select a hole position so the gage wheels are a minimum of 3/8 in. (9.5 mm) off the ground for the height-of-cut to be used (Fig. 17).

3. Reinstall the bolt, washers and nut (Fig. 17).

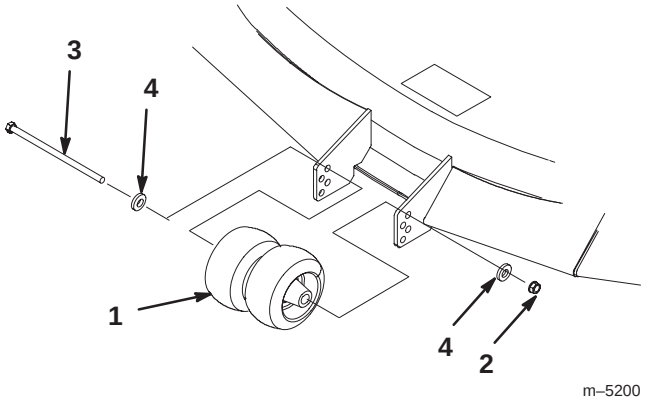

Figure 17

1. Center Gage Wheels and Spacer
2. Nut
3. Bolt
4. Washer

Maintenance

Note: Determine the left and right sides of the machine from the normal operating position.

Recommended Maintenance Schedule

Maintenance Service Interval	Maintenance Procedure
Each Use	• Engine Oil—check level • Safety System—check • Brake—check • Engine—clean outside • Mower Housing—clean
After first 5 hours	• Engine Oil—change
After first 8 Hours	• Hydraulic Oil—check
8 Hours	• Cutting Blades—check • Mower Housing—clean • Caster Wheels—grease
25 Hours	• Foam Air Cleaner—service[1] • Paper Air Cleaner—clean[1]
40 Hours	• PTO Belt Idler Arm—grease • Tires—check pressure • Hydraulic Oil—check
50 Hours	• Belts—check for wear/cracks
100 Hours	• Engine Oil—change[1] • Spark Plug(s)—check • Electric Clutch—adjust • Engine—clean outside • Paper Air Cleaner—replace[1]
After first 200 Hours	• Hydraulic oil filter—change
200 Hours	• Oil Filter—change (200 hours or every other oil change) • Fuel Filter—replace
At storage or 400 Hours	• Hydraulic oil filter—change • Chipped Surfaces—paint • Perform all maintenance procedures listed above before storage

[1]More often in dusty, dirty conditions.

Important Refer to your engine operator's manual for additional maintenance procedures.

Caution

If you leave the key in the ignition switch, someone could accidently start the engine and seriously injure you or other bystanders.

Remove the key from the ignition and disconnect the wire from the spark plug(s) before you do any maintenance. Set the wire aside so that it does not accidentally contact the spark plug.

Servicing the Air Cleaner

Service Interval/Specification

Foam Element: Clean and re-oil after every 25 operating hours.

Paper Element: Clean after every 25 operating hours.
Replace after every 100 operating hours.

Note: Service the air cleaner more frequently if operating conditions are extremely dusty or sandy.

Removing the Foam and Paper Elements

1. Disengage the power take off (PTO), set the parking brake, and turn the ignition key to "OFF" to stop the engine. Remove the key.
2. Clean around the air cleaner to prevent dirt from getting into the engine and causing damage. Unscrew the cover nut and remove the air cleaner cover (Fig. 18).
3. Remove the air cleaner assembly (Fig. 18).
4. Carefully slide the foam element off the paper element (Fig. 18).

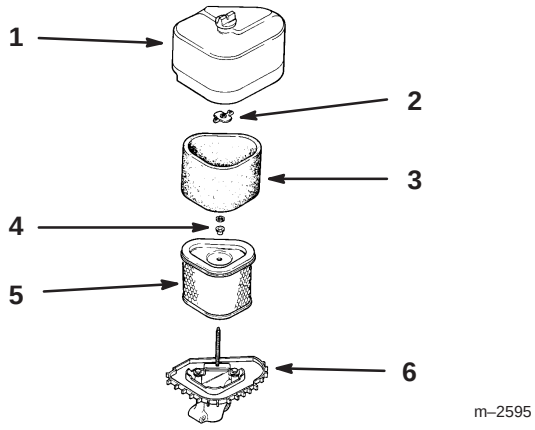

Figure 18

1. Cover and nut
2. Wing nut
3. Foam element
4. Washer and grommet
5. Paper element
6. Air cleaner base

Cleaning the Foam Elements

1. Wash the foam element in liquid soap and warm water. When the element is clean, rinse it thoroughly.
2. Dry the element by squeezing it in a clean cloth.
3. Put one or two ounces of oil on the element (Fig. 19). Squeeze the element to distribute the oil.

Important Replace the foam element if it is torn or worn.

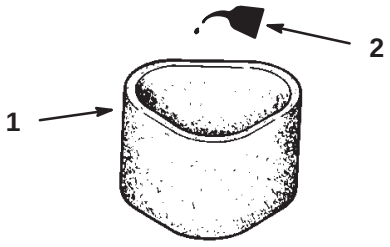

m–5193

Figure 19

1. Foam element 2. Oil

Cleaning the Paper Element

1. Lightly tap the element on a flat surface to remove dust and dirt (Fig. 20).
2. Inspect the element for tears, an oily film, and damage to the rubber seal.

Important Never clean the paper element with pressurized air or liquids, such as solvent, gas, or kerosene. Replace the paper element if it is damaged, defective, or cannot be cleaned thoroughly.

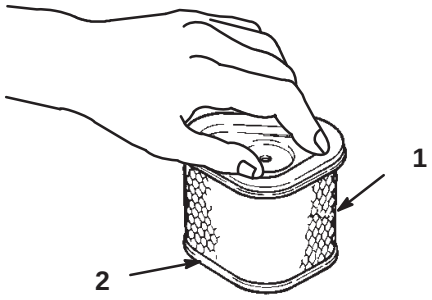

m–5192

Figure 20

1. Paper element 2. Rubber seal

Installing the Foam and Paper Elements

1. Installing the Foam and Paper Elements

Important To prevent engine damage, always operate the engine with the complete foam and paper air cleaner assembly installed.

1. Carefully slide the foam element onto the paper air cleaner element (Fig. 18).
2. Place the air cleaner assembly onto the air cleaner base (Fig. 18).
3. Install the air cleaner cover and secure with cover nuts (Fig. 18).

Servicing the Engine Oil

Service Interval/Specification

Change oil:

- After the first 5 operating hours.
- After every 100 operating hours.

Note: Change oil more frequently when operating conditions are extremely dusty or sandy.

Oil Type: Detergent oil (API service SF, SG or SH)

Crankcase Capacity: w/filter, 64 oz. (1.9 l)

Viscosity: See table below

USE THESE SAE VISCOSITY OILS

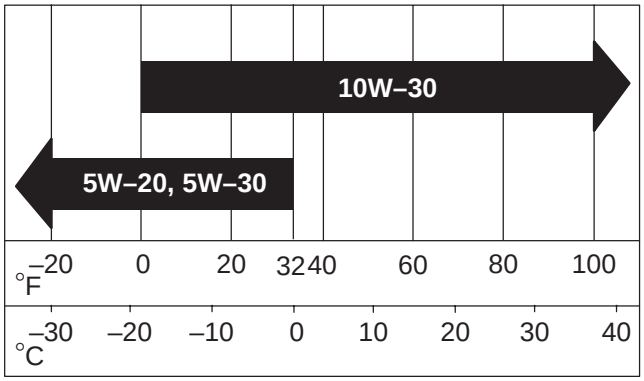

Checking Oil Level

1. Park the machine on a level surface, disengage the power take off (PTO), set the parking brake, and turn the ignition key to “OFF” to stop the engine. Remove the key.
2. Clean around the oil dipstick (Fig. 21) so dirt cannot fall into the filler hole and damage the engine.
3. Unscrew the oil dipstick and wipe the metal end clean (Fig. 21).
4. Slide the oil dipstick fully into the filler tube, do not thread onto tube (Fig. 21). Pull the dipstick out and look at the metal end. If oil level is low, slowly pour only enough oil into the filler tube to raise the level to the “FULL” mark.

Important Do not overfill the crankcase with oil because the engine may be damaged.

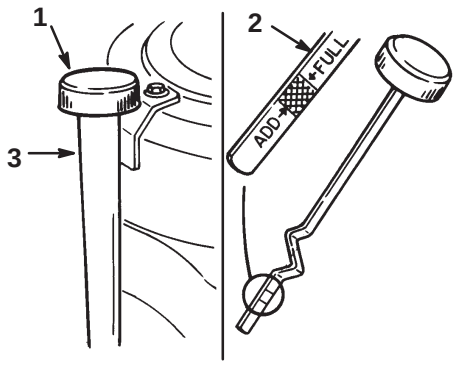

Figure 21

1. Oil dipstick
2. Metal end
3. Filler tube

Changing/Draining Oil

1. Start the engine and let it run five minutes. This warms the oil so it drains better.
2. Park the machine so that the drain side is slightly lower than the opposite side to assure the oil drains completely. Then disengage the power take off (PTO), set the parking brake, and turn the ignition key to "OFF" to stop the engine. Remove the key.
3. Place a pan below the oil drain. Remove the oil drain cap (Fig. 22).
4. When oil has drained completely, install the oil drain cap.

Note: Dispose of the used oil at a certified recycling center.

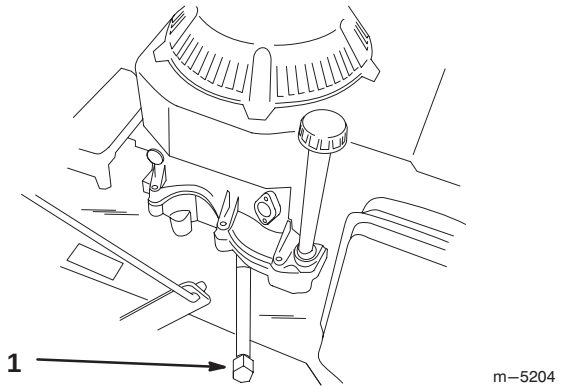

Figure 22

1. Oil drain cap

5. Slowly pour approximately 80% of the specified oil on page 26, into the filler tube (Fig. 21). Now check the oil level; refer to Checking Oil Level, page 26. Slowly add additional oil to bring to "FULL" mark on dipstick.

Change Oil Filter

Service Interval/Specification

Replace the oil filter every 200 hours or every other oil change.

Note: Change oil filter more frequently when operating conditions are extremely dusty or sandy.

1. Drain the oil from the engine; refer to Changing/Draining Oil, page 27.
2. Remove the old filter and wipe the filter adapter (Fig. 23) gasket surface.
3. Apply a thin coat of new oil to the rubber gasket on the replacement filter (Fig. 23).

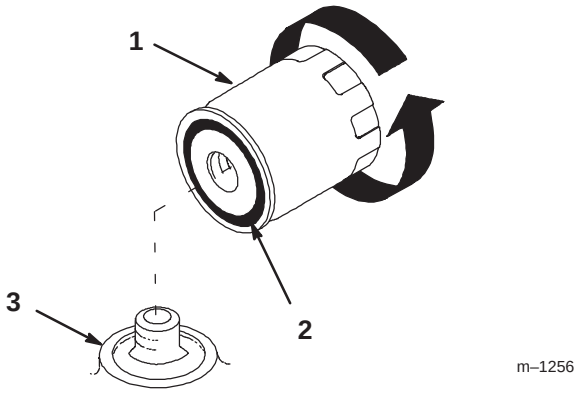

Figure 23

1. Oil filter
2. Gasket
3. Adapter

4. Install the replacement oil filter to the filter adapter. Turn the oil filter clockwise until the rubber gasket contacts the filter adapter, then tighten the filter an additional 1/2 turn (Fig. 23).
5. Fill the crankcase with the proper type of new oil; refer to Changing/Draining Oil, page 27.

Servicing the Spark Plug

Service Interval/Specification

Check the spark plug(s) after every 200 operating hours. Make sure the air gap between the center and side electrodes is correct before installing the spark plug. Use a spark plug wrench for removing and installing the spark plug(s) and a gapping tool/feeler gauge to check and adjust the air gap. Install a new spark plug(s) if necessary.

Type: Champion® RC12YC or Champion® Premium Gold 2071 (or equivalent)

Air Gap: 0.040 in. (1.00 mm)

Removing the Spark Plug(s)

1. Disengage the power take off (PTO), set the parking brake, and turn the ignition key to “OFF” to stop the engine. Remove the key.
2. Pull the wire(s) off the spark plug(s) (Fig. 24). Now clean around the spark plug(s) to prevent dirt from falling into the engine and potentially causing damage.
3. Remove the spark plug(s) and metal washer.

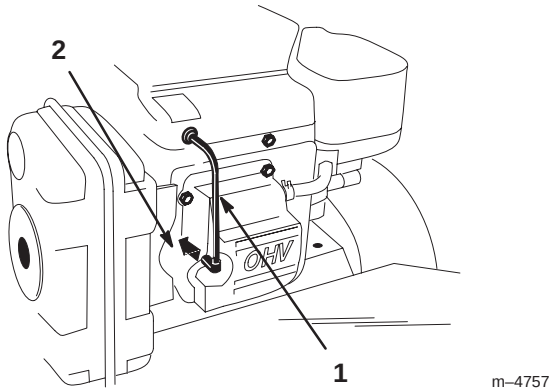

Figure 24

1. Spark plug wire
2. Spark plug

Checking the Spark Plug

1. Look at the center of the spark plug(s) (Fig. 25). If you see light brown or gray on the insulator, the engine is operating properly. A black coating on the insulator usually means the air cleaner is dirty.

Important Never clean the spark plug(s). Always replace the spark plug(s) when it has: a black coating, worn electrodes, an oily film, or cracks.

2. Check the gap between the center and side electrodes (Fig. 25). Bend the side electrode (Fig. 25) if the gap is not correct.

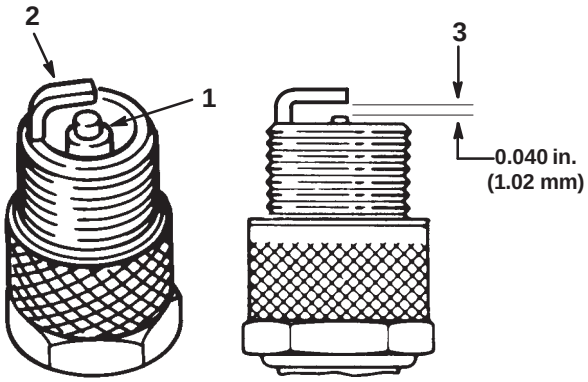

Figure 25

1. Center electrode insulator
2. Side electrode
3. Air gap (not to scale)

Installing the Spark Plug(s)

1. Install the spark plug(s) and metal washer. Make sure the air gap is set correctly.
2. Tighten the spark plug(s) to 20 ft-lb (27 N.m).
3. Push the wire(s) onto the spark plug(s) (Fig. 24).

Greasing and Lubrication

Service Interval/Specification

Refer to the **Check Service Reference Aid** decal for location and interval of greasing and lubrication (Fig. 26).

Grease with No. 2 general purpose lithium base or molybdenum base grease.

How to Grease

1. Disengage the power take off (PTO), chock or block tires, and turn the ignition key to “OFF” to stop the engine. Remove the key.
2. Clean the grease fittings with a rag. Make sure to scrape any paint off the front of the fitting(s).
3. Connect a grease gun to the fitting. Pump grease into the fittings.
4. Wipe up any excess grease.

Where to Add Grease

Lubricate the grease fittings as shown on the **Check Service Reference Aid** decal (Fig. 26).

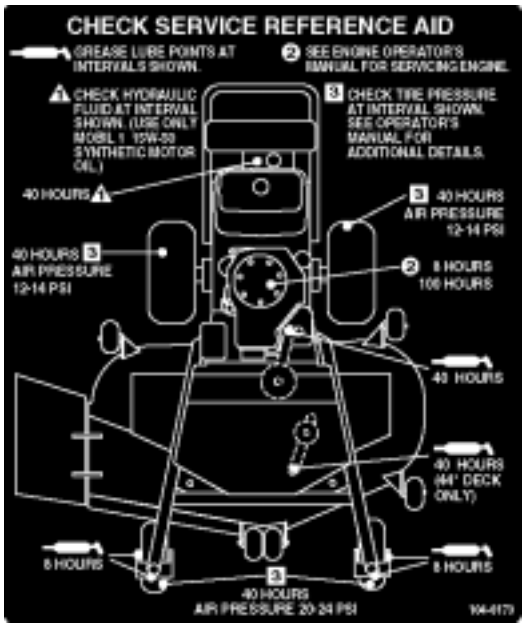

Figure 26

Lubricate the caster and wheel bearings

1. Lubricate the front and back wheel bearings and front spindles until grease begins to ooze out of the bearings (Fig. 27).

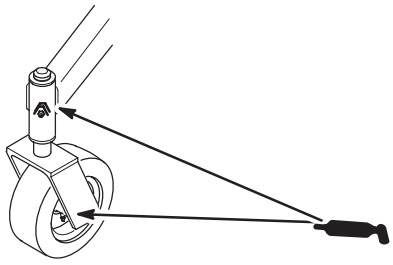

m–2147

Figure 27

Greasing the PTO Drive Belt Idler

1. Stop the engine, chock or block tires, remove the key and disconnect the spark plug wire(s) from the spark plug(s).
2. Grease the idler pulley pivot for the deck (Fig. 28).

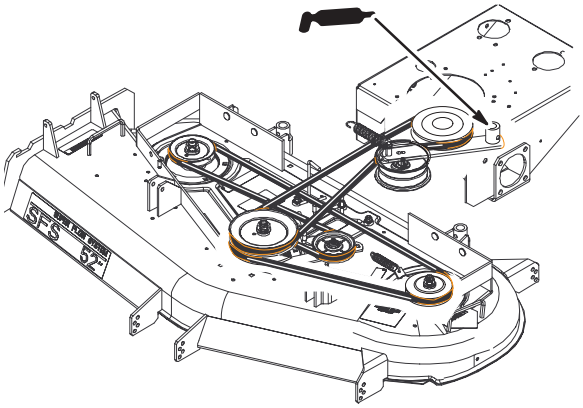

m–5196

Figure 28

Cleaning the Cooling System

Service Interval/Specification

Before each use, check and clean engine cooling system. Remove any build–up of grass, dirt or other debris from the cylinder and cylinder head cooling fins, air intake screen on flywheel end, and carburetor–governor levers and linkage. This will help insure adequate cooling and correct engine speed and will reduce the possibility of overheating and mechanical damage to the engine.

Checking Tire Pressure

Service Interval/Specification

Maintain the air pressure in the front and rear tires as specified. Check the pressure at the valve stem after every 40 operating hours or monthly, whichever occurs first (Fig. 29). Check the tires when they are cold to get the most accurate pressure reading.

Rear Tire Pressure: 12–14 psi (83–97 kPa)

Caster Tire Pressure: 20–24 psi (138–165 kPa)

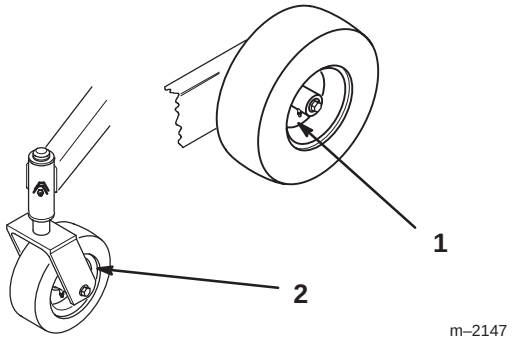

Figure 29

1. Rear Tire
2. Caster tire

Servicing the Fuel Tank

Danger

In certain conditions, gasoline is extremely flammable and highly explosive. A fire or explosion from gasoline can burn you and others and can damage property.

- **Drain gasoline from the fuel tank when the engine is cold. Do this outdoors in an open area. Wipe up any gasoline that spills.**
- **Never smoke when draining gasoline, and stay away from an open flame or where a spark may ignite the gasoline fumes.**

Draining The Fuel Tank

1. Park the machine on a level surface, to assure fuel tank drains completely. Then disengage the power take off (PTO), set the parking brake, and turn the ignition key to “OFF” to stop the engine. Remove the key.

2. Close fuel shut–off valve at fuel tank (Fig. 30).

Note: Remove fuel line from fuel valve that is closest to the engine.

3. Squeeze the ends of the hose clamp together and slide it up the fuel line away from valve (Fig. 30).

4. Pull the fuel line off the valve (Fig. 30). Open fuel shut-off valve and allow gasoline to drain into a gas can or drain pan.

Note: Now is the best time to install a new fuel filter because the fuel tank is empty. Refer to Replacing the Fuel Filter; page 30.

5. Install the fuel line onto the valve. Slide the hose clamp close to the valve to secure the fuel line.

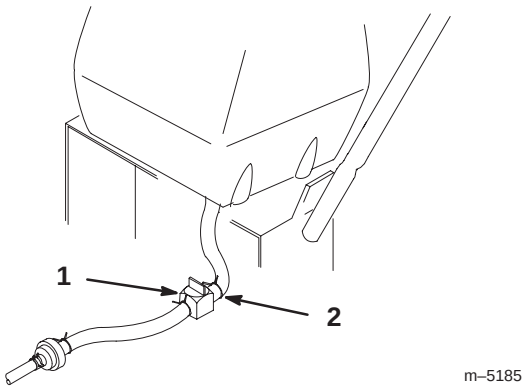

Figure 30

1. Fuel shut-off valve
2. Clamp

Servicing the Fuel Filter

Service Interval/Specification

Replace the fuel filter after every 200 operating hours or yearly, whichever occurs first.

Replacing the Fuel Filter

Never install a dirty filter if it is removed from the fuel line.

Note: Note how the fuel filter is installed.

1. Disengage the power take off (PTO), set the parking brake, and turn the ignition key to “OFF” to stop the engine. Remove the key.

2. Close fuel shut–off valve at fuel tank (Fig. 30).

3. Squeeze the ends of the hose clamps together and slide them away from the filter (Fig. 31).

4. Remove the filter from the fuel lines.

5. Install a new filter and move the hose clamps close to the filter.

6. Open fuel shut-off valve at fuel tank (Fig. 30).

7. Check for fuel leaks and repair if needed (Fig. 30).

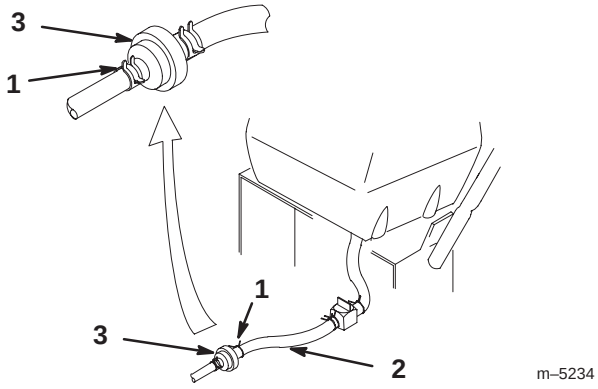

Figure 31

1. Hose clamp
2. Fuel line
3. Filter

Servicing the Hydraulic System

Checking the Hydraulic Fluid

Check the hydraulic fluid level:

- Before engine is first started.
- After first 8 operating hours.
- After 40 operating hours.

Fluid Type: Mobil 1 15W-50 synthetic motor oil or equivalent synthetic oil.

Important Use oil specified or equivalent. Other fluids could cause system damage.

Hydraulic System Oil Capacity: 67 oz. (2.0 l)

1. Position machine on a level surface, stop the engine and chock or block tires.

2. Clean area around filler neck of hydraulic tank (Fig. 32).

3. Remove cap from filler neck. Look inside to check if there is fluid in the reservoir. (Fig. 32).

4. If there is no fluid, add fluid to reservoir approximately a 1/4 in. (6mm) below the top of baffle.

5. Run the machine 15 minutes to allow any air to purge out of the system and warm fluid.

6. Recheck level while fluid is warm. Add fluid to raise level to top of the baffle, if required.

Note: Fluid level should be to the top of the baffle when fluid is warm (Fig. 32).

7. Install cap on filler neck.

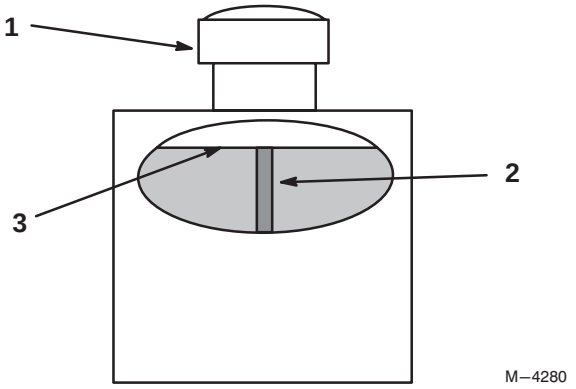

Figure 32

1. Cap
2. Baffle
3. Fluid level—full

Warning

Hydraulic fluid escaping under pressure can penetrate skin and cause injury.

- **If hydraulic fluid is injected into the skin it must be surgically removed within a few hours by a doctor familiar with this type of injury. Gangrene may result if this is not done.**
- **Keep body and hands away from pin hole leaks or nozzles that eject high pressure hydraulic fluid.**
- **Use cardboard or paper to find hydraulic leaks.**
- **Safely relieve all pressure in the hydraulic system before performing any work on the hydraulic system.**
- **Make sure all hydraulic fluid hoses and lines are in good condition and all hydraulic connections and fittings are tight before applying pressure to hydraulic system.**

Replacing the Hydraulic Filter

Change the hydraulic filter:

- After the first 200 operating hours.
- Yearly, before storage.

1. Position machine on a level surface, stop the engine, and remove key from ignition switch.

Important Do not substitute automotive oil filter or severe hydraulic system damage may result.

2. Remove hydro cap and temporarily cover opening with a plastic bag and rubber band to prevent all hydro fluid from draining out.

3. Place drain pan under filter, remove the old filter and wipe the filter adapter gasket surface clean (Fig. 33).

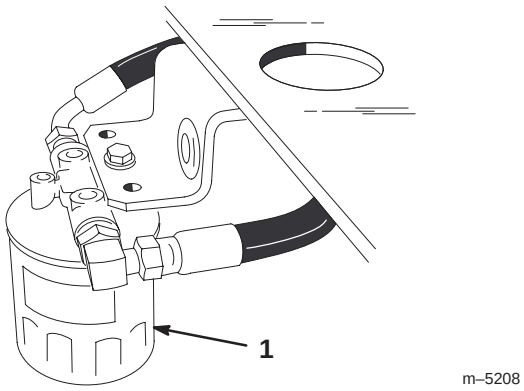

Figure 33

1. Hydraulic filter

4. Apply a thin coat hydro fluid to the rubber gasket on the replacement filter (Fig. 34).

5. Install replacement hydraulic filter onto the filter adapter. Do not tighten.

6. Remove plastic bag from tank opening and allow filter to fill with hydro fluid.

7. When fluid overflows filter turn the oil filter clockwise until the rubber gasket contacts the filter adapter, then tighten the filter an additional 1/2 turn (Fig. 34).

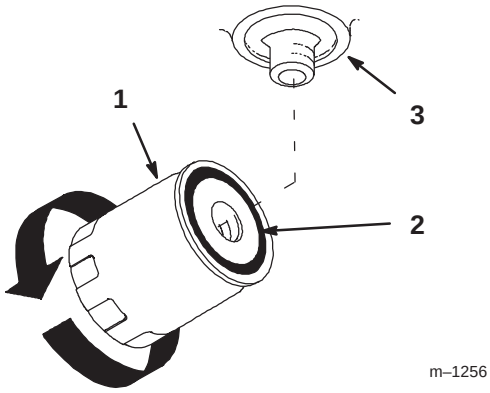

Figure 34

1. Hydraulic filter
2. Gasket
3. Adapter

8. If there is no fluid, add fluid to reservoir approximately a 1/4 in. (6mm) below the top of baffle.

9. Start engine and let run for about two minutes to purge air from the system. Stop the engine and check for leaks. If one or both wheels will not drive, refer Bleeding Hydraulic System, page 32.

10. Recheck level while fluid is warm. Add fluid to raise level to top of the baffle, if required. **Do not overfill.**

Bleeding Hydraulic System

The traction system is self bleeding, however, it may be necessary to bleed the system if fluid is changed or after work is performed on the system.

1. Raise rear of the machine so wheels are off the ground and support with jack stands.

2. Start the engine and run at idle speed. Engage traction on one side and spin the wheel by hand.

3. When the wheel begins to spin on its own, keep it engaged until wheel drives smoothly (minimum 2 minute).

4. Check hydraulic fluid level as it drops and add as required to maintain proper level.

5. Repeat procedure on opposite wheel.

Checking the Hydraulic Lines

After every 100 operating hours, check hydraulic lines and hoses for leaks, loose fittings, kinked lines, loose mounting supports, wear, weather and chemical deterioration. Make necessary repairs before operating.

Note: Keep areas around hydraulic system clean from grass and debris build up.

Warning

Hydraulic fluid escaping under pressure can penetrate skin and cause injury.

- **If hydraulic fluid is injected into the skin it must be surgically removed within a few hours by a doctor familiar with this type of injury. Gangrene may result if this is not done.**
- **Keep body and hands away from pin hole leaks or nozzles that eject high pressure hydraulic fluid.**
- **Use cardboard or paper to find hydraulic leaks.**
- **Safely relieve all pressure in the hydraulic system before performing any work on the hydraulic system.**
- **Make sure all hydraulic fluid hoses and lines are in good condition and all hydraulic connections and fittings are tight before applying pressure to hydraulic system.**

Adjusting the By-pass Valve

The by–pass valve is adjustable to ensure easy operation with a variety of deck sizes. If the front of the deck lifts off the ground when the upper control bar is quickly pushed forward or the machine is unable to drive up hills, an adjustment may be needed.

Testing Procedure

1. Start engine and run for 5 minutes at 3/4 throttle, to warm hydraulic fluid.
2. Drive the machine to a clear and level open area such as a driveway.

Important There should be at least 10 feet of clear area in front of the machine.

3. Loosen the quick release levers and push the reference bar forward to the “FAST” position. Lock the quick release levers to secure the reference bar.
4. Move throttle control to 3/4 throttle.
5. Quickly push the upper control bar against the reference bar. The front caster wheels should almost lift off the ground. If front caster wheels lift the off the ground , the machine is too aggressive and adjustment is required.
6. Move the engine throttle to the “FAST” position.
7. Quickly push the upper control bar against the reference bar. The front caster wheels should lift approximately 1 inch off the ground. If front caster wheels lift the off the ground more than 2 inches, the machine is too aggressive. Adjustment is required.
8. If the machine accelerates slowly, and the front caster wheels do not lift off the ground, the machine is too un–responsive. Adjustment is required.

Adjusting Procedure

The by–pass valve should be adjusted to deliver best performance for the size (weight) mower you have. The by–pass valve factory setting is 1/2 turn out.

The following values can be used as initial settings for different size mowers:
52 in. (132 cm) 1/2 turn out
44 in. (112 cm) 1 turn out
36 in. (91 cm) 1–1/6 turn out

1. Loosen large jam nut several turns (Fig. 35).
2. Gently close by–pass valve (Fig. 35).

Important Do not over–tighten valve or needle and seat may be damaged. Do not exceed 50 inch pounds to close valve.

3. Open by–pass valve 1/2 turn (Fig. 35).
4. Tighten jam nut to lock the adjustment (Fig. 35).
5. Repeat “Test Procedure” to check for proper operation.

Important By–pass valve adjustment is very sensitive, do not adjust more than 1/6 turn (one flat) at a time.

6. If the machine is too aggressive or tends to jump forward, the valve needs to be opened further.
7. If the machine is slow to respond, the valve needs to be closed further.
8. Repeat “Test Procedure” to check for proper operation. Re-adjust the by–pass valves until proper performance is achieved.

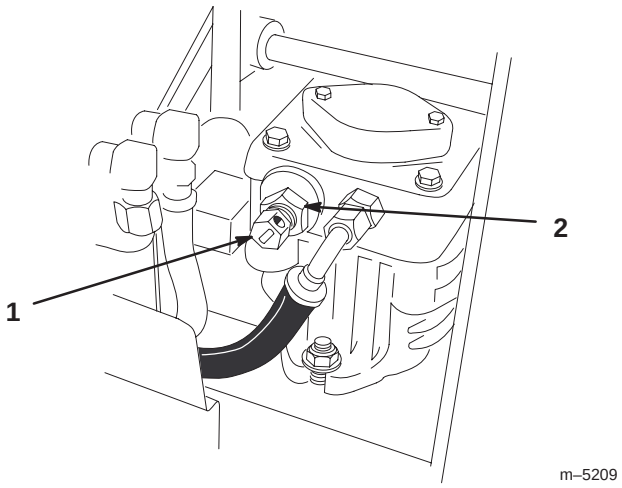

Figure 35

1. By-pass valve
2. Jam nut

Adjusting Neutral

If wheels turn when control bar is in neutral, adjustment is required

1. Raise rear of the machine so wheels are off the ground and support with jack stands.

Caution

Children or bystanders may be injured if they move or attempt to operate the machine while it is unattended.

Always remove the ignition and chock or block tires when leaving the machine unattended, even if just for a few minutes.

2. Start engine and run for 5 minutes at 3/4 throttle, to warm hydraulic fluid.
3. Move control bar rearward and forward then release. If wheels rotate when control bar is in neutral, adjustment is required.
4. Loosen top and bottom jam nuts at pump arm neutral adjustment sleeve (Fig. 36).

5. Push down on Pump Arm until Sleeve contacts bottom nut (Fig. 36). Wheel should now be rotating slowly in reverse.
6. Turn bottom nut up slowly, moving sleeve and pump arm up, until wheel stops rotating (Fig. 36).
7. Turn top nut down against sleeve and tighten to lock the adjustment (Fig. 36).
8. Repeat step 3 above to check adjustment. Repeat adjustment procedure if necessary.
9. Repeat on other wheel, if necessary.

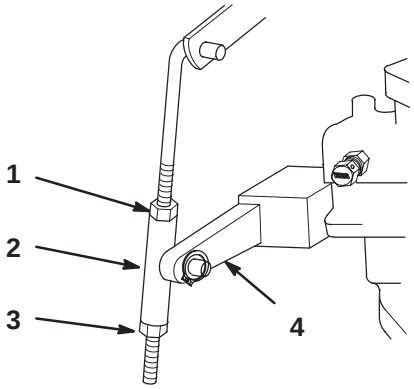

Figure 36

1. Top jam nut
2. Sleeve
3. Bottom jam nut
4. Pump arm

Adjusting the Electric Clutch

The clutch is adjustable to ensure proper engagement and proper braking. Check adjustment after every 100 hours of operation.

1. To adjust clutch, tighten or loosen lock nuts on flange studs (Fig. 37).
2. Check adjustment by inserting feeler gauge through slots next to studs (Fig. 37).
3. The proper disengaged clearance between the clutch plates is .012–.024 in. (0.30-0.60 mm). It will be necessary to check this clearance at each of the three slots to ensure the plates are parallel to each other.

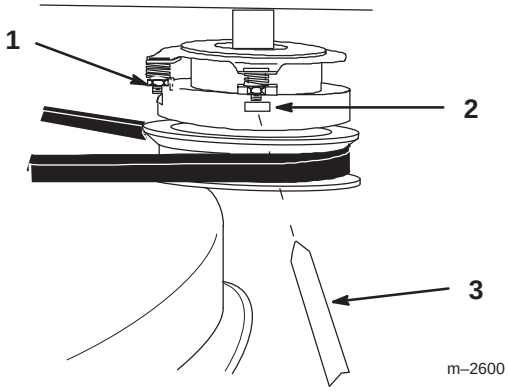

Figure 37

1. Adjusting nut
2. Slot
3. Feeler gauge

Servicing the Fuse

Service Interval/Specification

The electrical system is protected by a fuse. It requires no maintenance. If the fuse blows check component or circuit for malfunction or short. To replace fuse pull out on the fuse (Fig. 38) to remove or replace it.

Fuse: F1–7.5 amp, blade-type

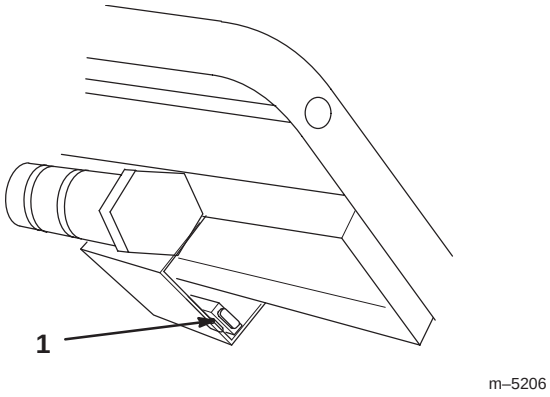

Figure 38

1. Fuse 7.5 amp

1. Disengage the power take off (PTO), chock or block tires, and turn the ignition key to “OFF” to stop the engine. Remove the key.

Servicing the Cutting Blade

To ensure a superior quality of cut, keep the blades sharp. For convenient sharpening and replacement, you may want to keep extra blades on hand.

Danger

A worn or damaged blade can break, and a piece of the blade could be thrown into the operator's or bystander's area, resulting in serious personal injury or death.

- **Inspect the blade periodically for wear or damage.**
- **Replace a worn or damaged blade.**

Before Inspecting or Servicing the Blades

Park the machine on a level surface, disengage the blade control (PTO) and chock or block tires. Turn the ignition key to "OFF" to stop the engine. Remove the key and disconnect the spark plug wire(s) from the spark plug(s).

Inspecting the Blades

1. Inspect the cutting edges (Fig 39). If the edges are not sharp or have nicks, remove and sharpen the blades. Refer to Sharpening the Blades on page 36.
2. Inspect the blades, especially the curved area (Fig. 39). If you notice any damage, wear, or a slot forming in this area (item 3 in Fig. 39), immediately install a new blade.

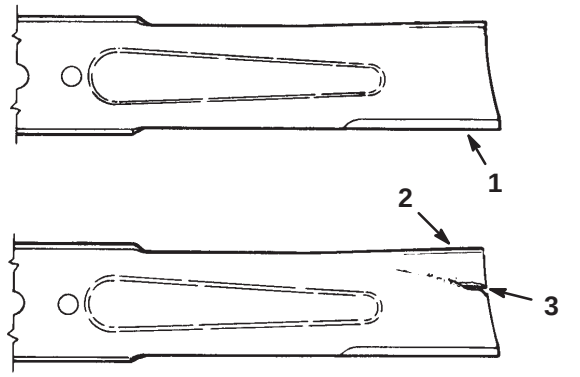

m–151

Figure 39

1. Cutting Edge
2. Curved Area
3. Wear/slot Forming

Checking for Bent Blades

1. Rotate the blades until the ends face forward and backward (Fig. 40). Measure from a level surface to the cutting edge, position "A", of the blades (Fig. 41). Note this dimension.

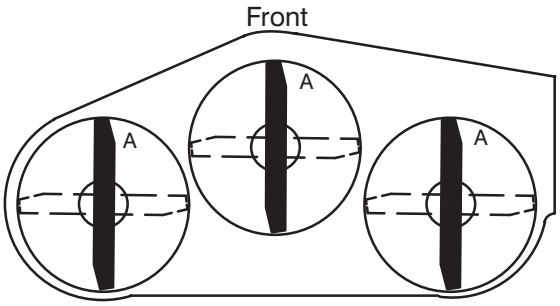

m–1078

Figure 40

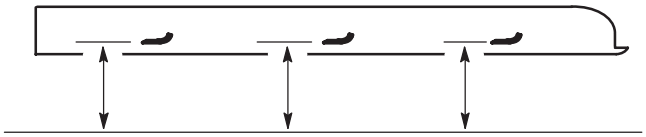

MEASURE FROM CUTTING EDGE TO A LEVEL SURFACE

m–2539

Figure 41

2. Rotate the opposite ends of the blades forward.
3. Measure from a level surface to the cutting edge of the blades at the same position as in step 1. The difference between the dimensions obtained in steps 1 and 2 must not exceed 1/8 in. (3 mm). If this dimension exceeds 1/8 in. (3 mm), the blade is bent and must be replaced. Refer to Removing the Blades, and Installing the Blades on page 36.

Warning

A blade that is bent or damaged could break apart and could seriously injure or kill you or bystanders.

- **Always replace bent or damaged blade with a new blade.**
- **Never file or create sharp notches in the edges or surfaces of blade.**

Removing the Blades

Blades must be replaced if a solid object is hit, if the blade is out of balance or is bent. To ensure optimum performance and continued safety conformance of the machine, use genuine TORO replacement blades. Replacement blades made by other manufacturers may result in non-conformance with safety standards.

1. Hold the blade end using a rag or thickly-padded glove. Remove the blade bolt, lock washer, washer and blade from the spindle shaft (Fig. 42).

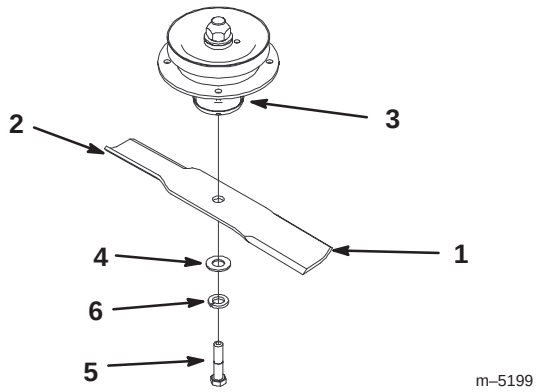

Figure 42

1. Sail Area of Blade
2. Blade
3. Blade spindle
4. Washer
5. Blade Bolt
6. Lock washer

Sharpening the Blades

1. Use a file to sharpen the cutting edge at both ends of the blade (Fig. 43). Maintain the original angle. The blade retains its balance if the same amount of material is removed from both cutting edges.

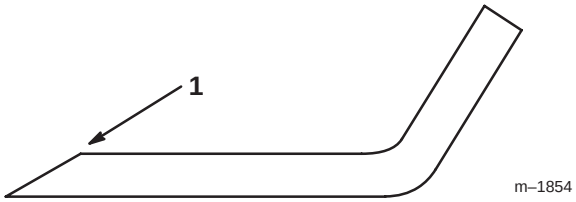

Figure 43

1. Sharpen at original angle

2. Check the balance of the blade by putting it on a blade balancer (Fig. 44). If the blade stays in a horizontal position, the blade is balanced and can be used. If the blade is not balanced, file some metal off the end of the sail area only (Fig. 42). Repeat this procedure until the blade is balanced.

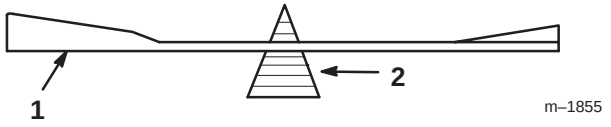

Figure 44

1. Blade
2. Balancer

Installing the Blades

1. Install the blade onto the spindle shaft (Fig. 42).

Important The sail part of the blade must be pointing upward, toward the inside of the mower to ensure proper cutting (Fig. 42).

2. Install the washer, lock washer and blade bolt (Fig. 42). Torque the blade bolt to 85–110 ft-lb (115–140 N•m).

Correcting Cutting Unit Mismatch

If one deck blade cuts lower than the other, correct as follows.

Note: Tire air pressure is critical in these procedures. Make sure all tires have correct pressure.

1. Stop the engine, remove the key and disconnect the spark plug wire(s) from the spark plug(s).
2. Adjust the tire pressure in all tires to specifications on page 29.
3. Check that the blades and spindle shafts are not bent. Refer to Checking for Bent Blades on page 35.
4. Set the height-of-cut to the 4 in. position. Refer to Adjusting the Height-Of-Cut in the Operation section.
5. Perform steps in the following sections Frame Set Up, Checking Front–to–Rear Pitch and Checking Side–to–Side Leveling.

Setting Up the Frame

Checking Carrier Frame and Deck Alignment

1. Stop the engine, remove the key and disconnect the spark plug wire(s) from the spark plug(s).
2. Place a long straight edge on top of the engine deck as shown in figure 45.
3. At the carrier frame cross tube, measure location “A” height (Fig. 45). This measurement must be 2–13/16 in., plus or minus a 1/4 in.

4. If the height at location “A” is not correct, adjustment is needed.

5. Loosen the carrier frame mounting bolts on both sides of the machine (Fig. 45).

6. Align the carrier frame and engine deck to match 2–13/16 in., plus or minus a 1/4 in. at location “A” (Fig. 45).

7. Tighten the carrier frame mounting bolts on both sides of the machine.

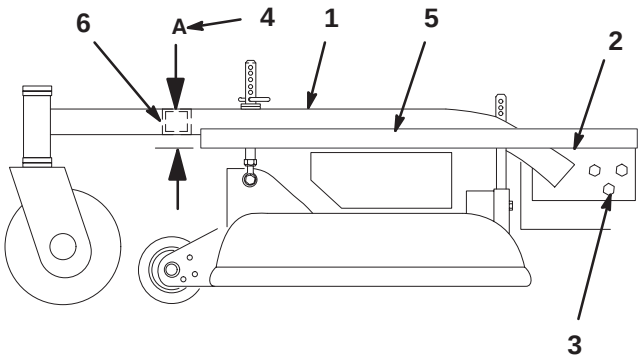

m–5315

Figure 45

1. Carrier Frame
2. Top of engine deck
3. Carrier frame mounting bolts
4. Location A, 2–13/16 in.±1/4 in.
5. Straight edge
6. Carrier frame cross tube

Checking Engine Deck Height

1. Stop the engine, remove the key and disconnect the spark plug wire(s) from the spark plug(s).

2. Adjust the tire pressure in all tires to specifications on page 29.

3. Measure engine deck height at location “A” (Fig. 46).

4. Measure engine deck height at location “B” (Fig. 46).

5. If the height at location “A” and “B” are not the same, change tire pressure slightly to make them the same.

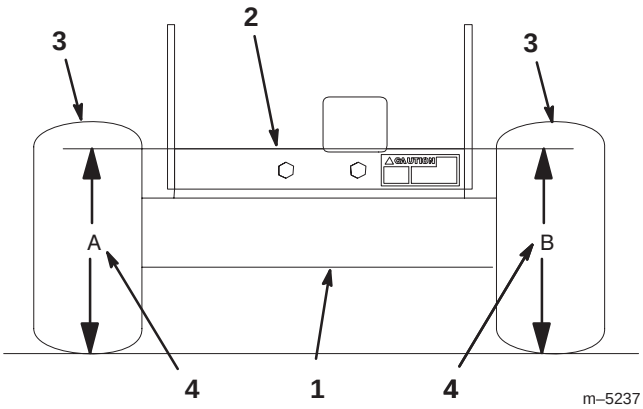

m–5237

Figure 46

1. Back view of machine
2. Top of engine deck
3. Tires
4. Same height at locations A and B

Checking Carrier Frame Front–to–Rear Pitch

The carrier frame must have a pitch of a 1/4 in. over the length of 24 inches on the carrier frame.

1. Measure out 24 inches on the carrier frame (Fig. 47).

2. Measure carrier frame height at location “A” (Fig. 47).

3. Measure carrier frame height at location “B” (Fig. 47).

4. The height at location “A” must be a 1/4–3/8 in. lower than location “B” (Fig. 47).

5. If the carrier frame is not correct, move caster spacers to make it a 1/4–3/8 in. pitch (Fig. 47). Move spacers from top or bottom to make the correct pitch.

6. The tire pressure may also be adjusted slightly to make a 1/4–3/8 in. pitch.

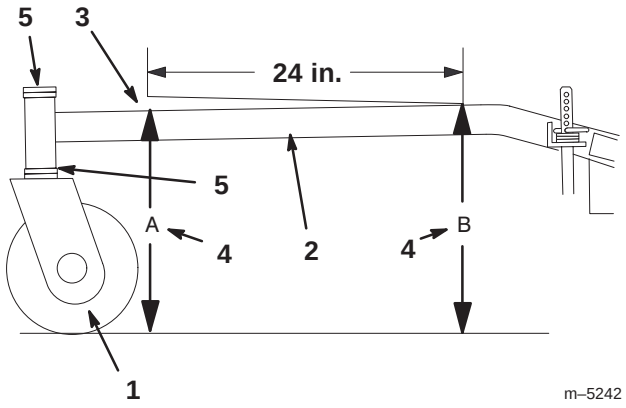

Figure 47

1. Caster Wheel
2. Carrier Frame
3. 1/4–3/8 in. pitch over 24 in. length
4. Height at locations A and B
5. Caster spacers

Checking Carrier Frame Side–to–Side

1. Stop the engine, remove the key and disconnect the spark plug wire(s) from the spark plug(s).
2. Adjust the tire pressure in all tires to specifications on page 29.
3. Measure carrier frame height at location “A” (Fig. 48).
4. Measure carrier frame height at location “B” (Fig. 48).
5. If the carrier frame height is not the same move spacers from top or bottom of caster wheel, to make it level. The tire pressure may also be adjusted slightly to make it level.

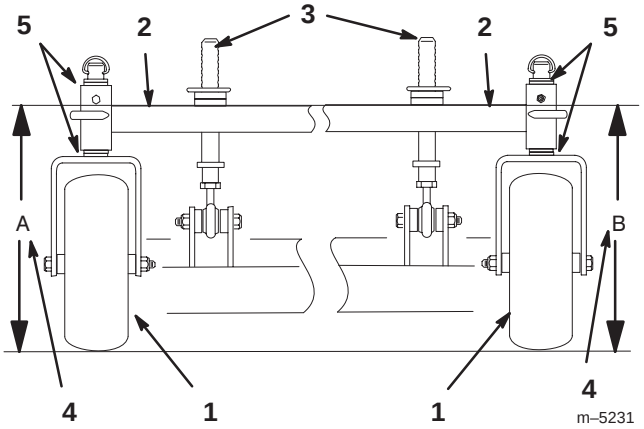

Figure 48

1. Caster Wheel
2. Carrier Frame
3. Front height–of–cut pins
4. Same height at locations A and B
5. Caster spacers

Checking the Deck Front-to-Rear Pitch

1. Check the tire pressure on both deck and traction unit.
2. Position one blade front-to-rear (Fig. 49). Measure at “C” and “D” locations (Fig. 49) from a level surface to the cutting edge of the blade tips (Fig. 50).
3. **The mower blade should be 1/4 in. (6 mm) lower in front “C” than in the rear “D”.** Rotate blades and repeat for other blades. If it is not correct, proceed to Changing the Deck Front–to–Rear Pitch.

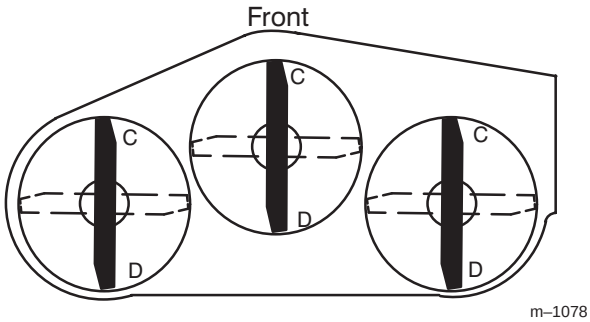

Figure 49

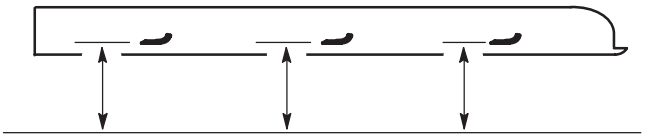

MEASURE FROM CUTTING EDGE TO A LEVEL SURFACE

m–2539

Figure 50

Changing the Deck Front-to-Rear Pitch

Changing the front–to–rear pitch is done by adjusting the front height–of–cut posts.

Changing the Deck Front–to–Rear Pitch by Adjusting Front Height–of–Cut Posts

1. To change the front-to-rear pitch, the front height–of–cut posts can be adjusted (Fig. 51).
2. To raise the front of the deck, loosen jam nut and rotate the front pin clockwise (Fig. 51).
3. To lower the front of the deck, loosen jam nut and rotate the front pin counter clockwise (Fig. 51).

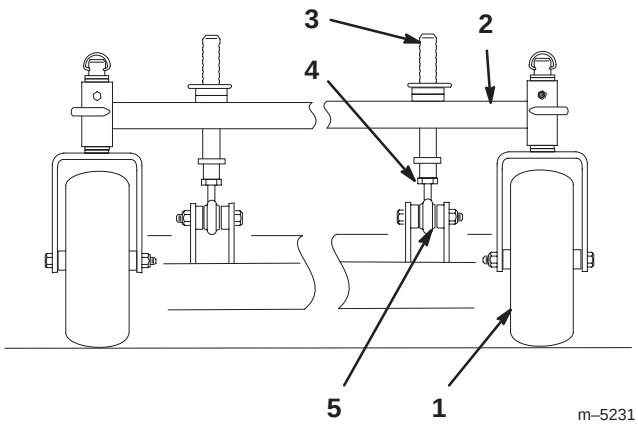

Figure 51

1. Caster Wheel
2. Carrier Frame
3. Front height–of–cut pins
4. Jam nut
5. Ball joint

4. Position the blades front-to-rear (Fig. 49). Measure at “C” and “D” locations (Fig. 49) from a level surface to the cutting edge of the blades (Fig. 50).

5. Check the side-to-side leveling of the cutting unit.

Checking the Mower Side-to-Side Level

1. Check the tire pressure on both deck and traction unit.

2. Position the blades side-to-side (Fig. 52). Measure at “A” and “B” locations (Fig. 52) from a level surface to the cutting edge of blade tips (Fig. 53).

3. The difference between measurements “A” and “B” should be no more than 1/4” (6 mm).

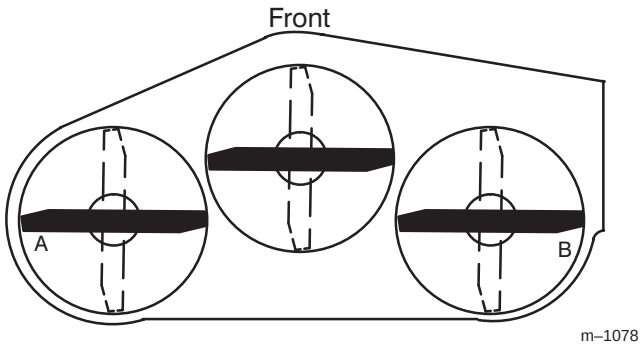

Figure 52

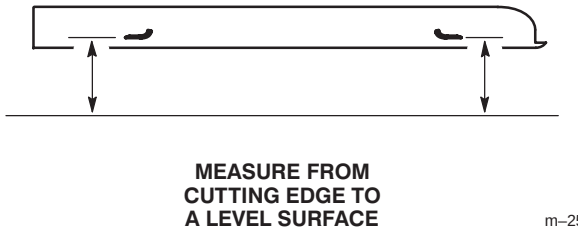

Figure 53

Changing the Mower Side-to-Side Level

Changing the side–to–side leveling is done by adjusting tire pressure.

1. Change the tire pressure on both deck and traction unit. Do this to the corresponding side that needs adjustment.

2. Recheck the front-to-rear pitch and side to side leveling of the cutting unit.

Matching Height of Cut

1. Check the tire pressure on both deck and traction unit.

2. Set the height-of-cut to the 4 in. position following the height-of-cut decal.

3. With the machine on level surface, position one blade front-to-rear (Fig. 54). Measure at “A” and from level surface to the cutting edge of the blade tips (Fig. 55).

4. The measurement should be 4 in.

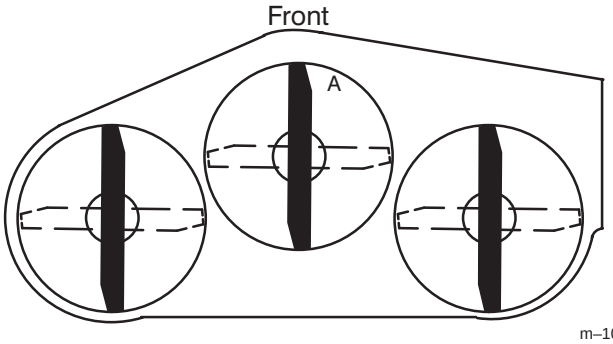

Figure 54

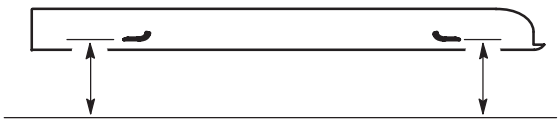

MEASURE FROM CUTTING EDGE TO A LEVEL SURFACE

m–2550

Figure 55

5. If it does not measure correctly, add air pressure in rear tires to raise height–of–cut
6. If it does not measure correctly, decrease air pressure in rear tires to lower height–of–cut.
7. Check carrier frame front–to–rear pitch.

Replacing the Traction Belt

Check traction drive belt for wear after every 50 hours of operation.

1. Raise the front of the machine and hold with jack stands.
2. Disconnect clutch wire connector from wire harness.
3. Remove PTO drive belt. Refer to Replacing the PTO Drive Belt on page 41.
4. Remove clutch retainer from the engine deck (Fig. 56).
5. Unhook tension spring from side of frame (Fig. 56).
6. Loosen pivot bolt enough to remove traction belt from the drive pulley and clutch.
7. Install new belt around clutch and drive pulleys.
8. Torque pivot bolt to 35-40 ft. lb. (47-54 N.m). Install tension spring between idler arm and frame bracket (Fig. 56).
9. Install clutch retainer to the engine deck (Fig. 56).
10. Connect clutch wire connector to wire harness.
11. Install PTO drive belt.

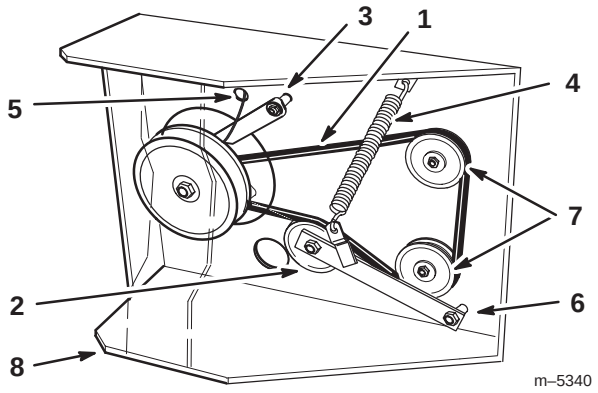

Figure 56

1. Traction belt
2. Idler pulley
3. Clutch retainer
4. Tension spring
5. Clutch wire connector
6. Pivot bolt
7. Drive pulley
8. Engine deck

Replacing the Deck Belt

Squealing when the belt is rotating, blades slipping when cutting grass, frayed belt edges, burn marks and cracks are signs of a worn deck belt. Replace the deck belt if any of these conditions are evident.

1. Stop the engine, remove the key and disconnect the spark plug wire(s) from the spark plug(s).
2. Remove the knobs holding the carrier frame cover and remove the carrier frame cover.
3. Remove the knobs holding the belt covers to the cutting unit and remove the belt covers.
4. Remove the PTO drive belt. Refer to Replacing the PTO Drive Belt on page 41.
5. Disconnect the idler arm spring to relieve tension on the idler arm and idler pulley, then remove the worn deck belt (Fig. 57).
6. Install the new deck belt around the two outside spindle pulleys, the idler pulley, and in the lower groove of the center spindle pulley (Fig. 57).
7. Connect the idler arm spring (Fig. 57).
8. Reinstall the PTO drive belt. Refer to Replacing the PTO Drive Belt page 41.
9. Reinstall the deck covers onto the cutting unit, then reinstall and tighten the knobs.

10. Install the carrier frame cover onto the cutting unit, then install and tighten the hand knobs.

11. Adjust deck belt guide an 1/8 in. from belt (Fig. 57).

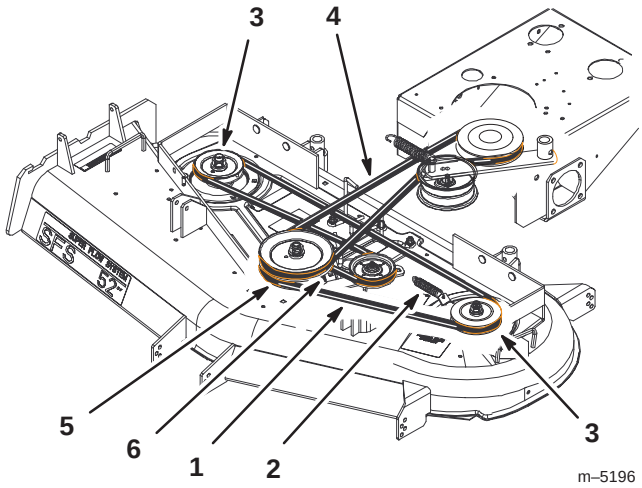

Figure 57

1. Deck belt
2. Idler arm spring
3. Outside pulley
4. PTO Drive belt
5. Center spindle pulley
6. Belt guide

Replacing the PTO Drive Belt

Squealing when the belt is rotating, blades slipping when cutting grass, frayed belt edges, burn marks and cracks are signs of a worn drive belt. Replace the drive belt if any of these conditions are evident.

1. Stop the engine, remove the key and disconnect the spark plug wire(s) from the spark plug(s).

2. Remove the knobs holding the carrier frame cover and remove the carrier frame cover.

3. Remove the knobs holding the belt covers to the top of the cutting unit and remove the belt covers.

4. Remove the heat shield from the the engine deck and carrier frame.

5. Remove the idler spring from idler arm. Remove the drive belt from the PTO engagement pulley and the center spindle pulley (Fig. 58).

6. Remove the worn drive belt (Fig. 58).

7. Install the new drive belt onto the PTO engagement pulley and the top groove of the center spindle pulley (Fig. 58).

8. Install belt onto idler pulley and then install idler spring (Fig. 58).

9. Adjust PTO drive belt guides an 1/8 in. from belt (Fig. 58).

10. Install the heat shield to the the engine deck and carrier frame.

11. Install the belt covers onto the cutting unit, then install and tighten the knobs.

12. Install the carrier frame cover onto the cutting unit, then install and tighten the hand knobs.

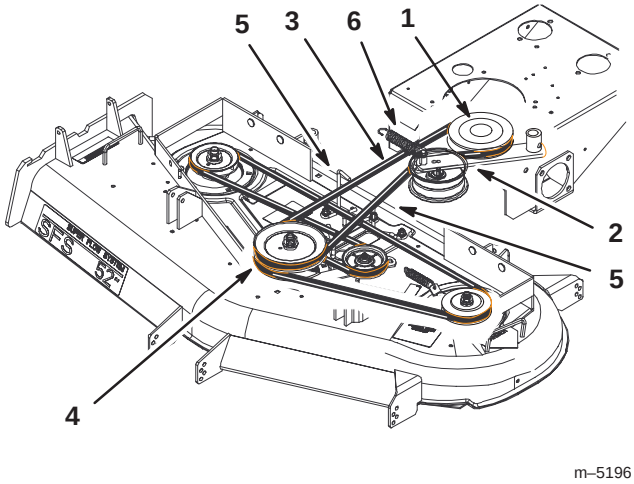

Figure 58

1. PTO engagement pulley
2. Drive belt idler
3. PTO drive Belt
4. Center Spindle Pulley
5. PTO Drive belt guide
6. Idler Spring

Replacing the Caster Wheel Fork Bushings

The caster wheel forks are mounted in bushings pressed into the top and bottom of the carrier frame mounting tubes. To check the bushings, move the caster forks back and forth and side-to-side. If a caster fork is loose, the bushings are worn and must be replaced.

1. Raise the cutting unit so the caster wheels are off the floor, then block up the front of the mower with jack stands.

2. Remove the locking pin and spacer(s) from the top of the caster wheel fork (Fig. 59).

3. Pull the caster wheel fork out of the mounting tube, leaving the spacer(s) on the bottom of the fork. Remember the location of the spacers on each fork to ensure correct installation, and to maintain a level deck.

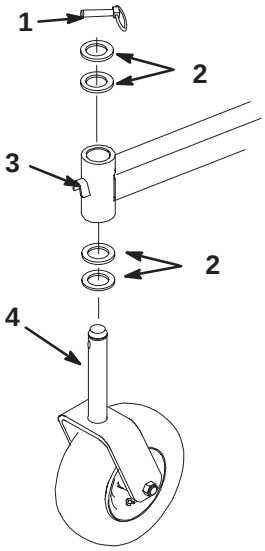

m–5198

Figure 59

1. Locking Pin
2. Spacers (locate as required)
3. Carrier Frame Mounting Tube
4. Caster Wheel Fork

4. Insert a pin punch into the mounting tube and carefully drive out the bushings (Fig. 60). Clean the inside of the mounting tube.

5. Grease the inside and outside of the new bushings. Use a hammer and flat plate to carefully drive the bushings into the mounting tube.

6. Inspect the caster wheel fork for wear and replace if necessary (Fig. 60).

7. Slide the caster wheel fork through the bushings in the mounting tube. Replace the spacers(s) onto the fork and secure with the retaining ring (Fig. 59).

Important The inside diameter of the bushings may collapse slightly when installed. If the caster wheel fork does not slide into the new bushings, ream both bushings to an inside diameter of 1.126 in. (28.6mm).

8. Grease the fitting on the carrier frame mounting tube using No. 2 general purpose lithium base or molybdenum base grease.

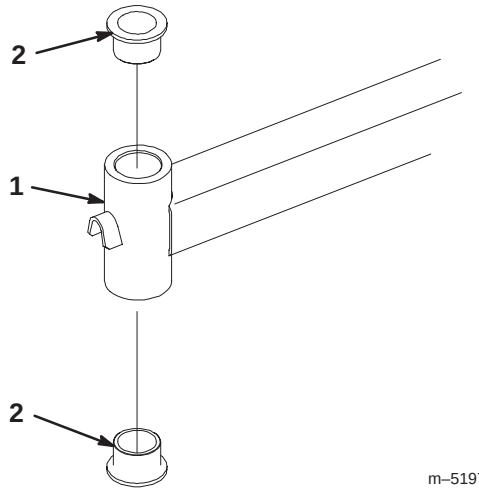

m–5197

Figure 60

1. Carrier Frame Mounting Tube
2. Bushing

Servicing the Caster Wheel and Bearings

The caster wheels rotate on a roller bearing supported by a spanner bushing. If the bearing is kept well lubricated, wear will be minimal. Failure to keep the bearing well lubricated will cause rapid wear. A wobbly caster wheel usually indicates a worn bearing.

1. Remove the locknut and wheel bolt holding the caster wheel to the caster fork (Fig. 61).

2. Remove one bushing, then pull the spanner bushing and roller bearing out of the wheel hub (Fig. 61).

3. Remove the other bushing from the wheel hub and clean any grease and dirt from the wheel hub (Fig. 61).

4. Inspect the roller bearing, bushings, spanner bushing and inside of the wheel hub for wear. Replace any defective or worn parts (Fig. 61).

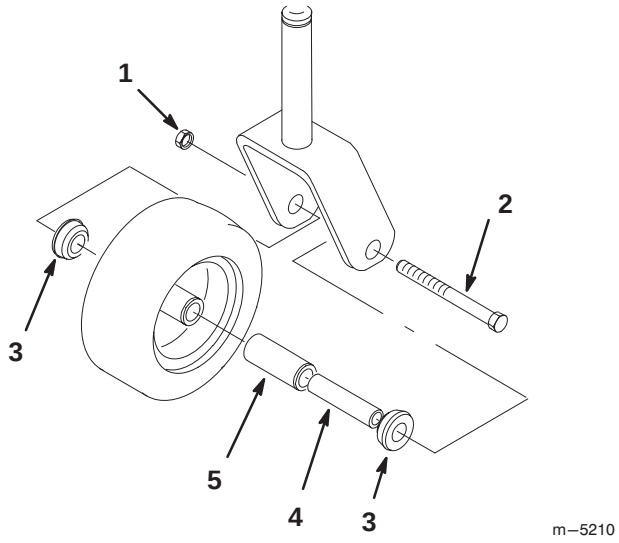

Figure 61

1. Locknut
2. Wheel Bolt
3. Bushing
4. Spanner Bushing
5. Roller Bearing

5. To assemble, place one (1) bushing into the wheel hub. Grease the roller bearing and spanner bushing and slide them into the wheel hub. Place the second bushing into the wheel hub (Fig. 61).

6. Install the caster wheel into the caster fork and secure with the wheel bolt and locknut. Tighten the locknut until the spanner bushing bottoms against the inside of the caster forks (Fig. 61).

7. Grease the fitting on the caster wheel.

Replacing the Grass Deflector

Warning

An uncovered discharge opening could allow the lawn mower to throw objects in the operator's or bystander's direction and result in serious injury. Also, contact with the blade could occur.

Never operate the lawn mower unless you install a cover plate, a mulch plate, or a grass chute and catcher.

1. Remove the locknut, bolt, spring and spacer holding the deflector to the pivot brackets (Fig. 62). Remove damaged or worn grass deflector.

2. Place spacer and spring onto grass deflector. Place the "L" end of spring behind deck edge.

Note: Make sure the "L" end of spring is installed behind deck edge before installing the bolt as shown in figure 62.

3. Install bolt and nut. Place "J" hook end of spring around grass deflector (Fig. 62).

Important The grass deflector must be able to lower down into position. Lift the deflector up to test that it lowers into the full down position.

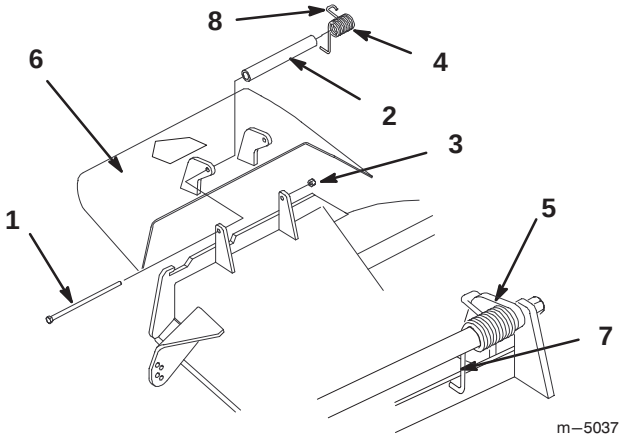

Figure 62

1. Bolt
2. Spacer
3. Locknut
4. Spring
5. Spring installed
6. Grass Deflector
7. "L" end of spring, place behind deck edge before installing bolt
8. "J" hook end of spring

Wiring Diagram

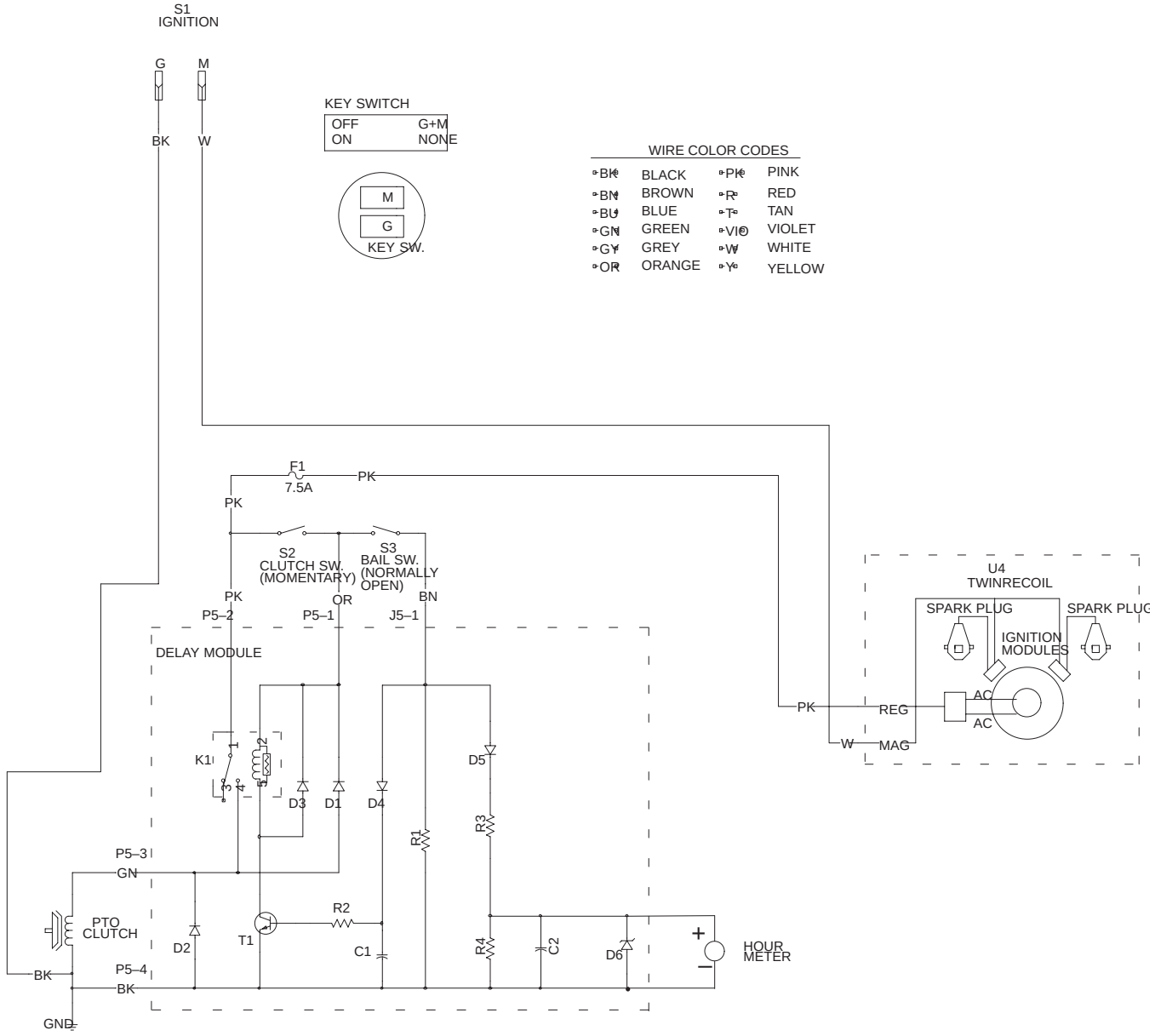

Hydraulic Diagram

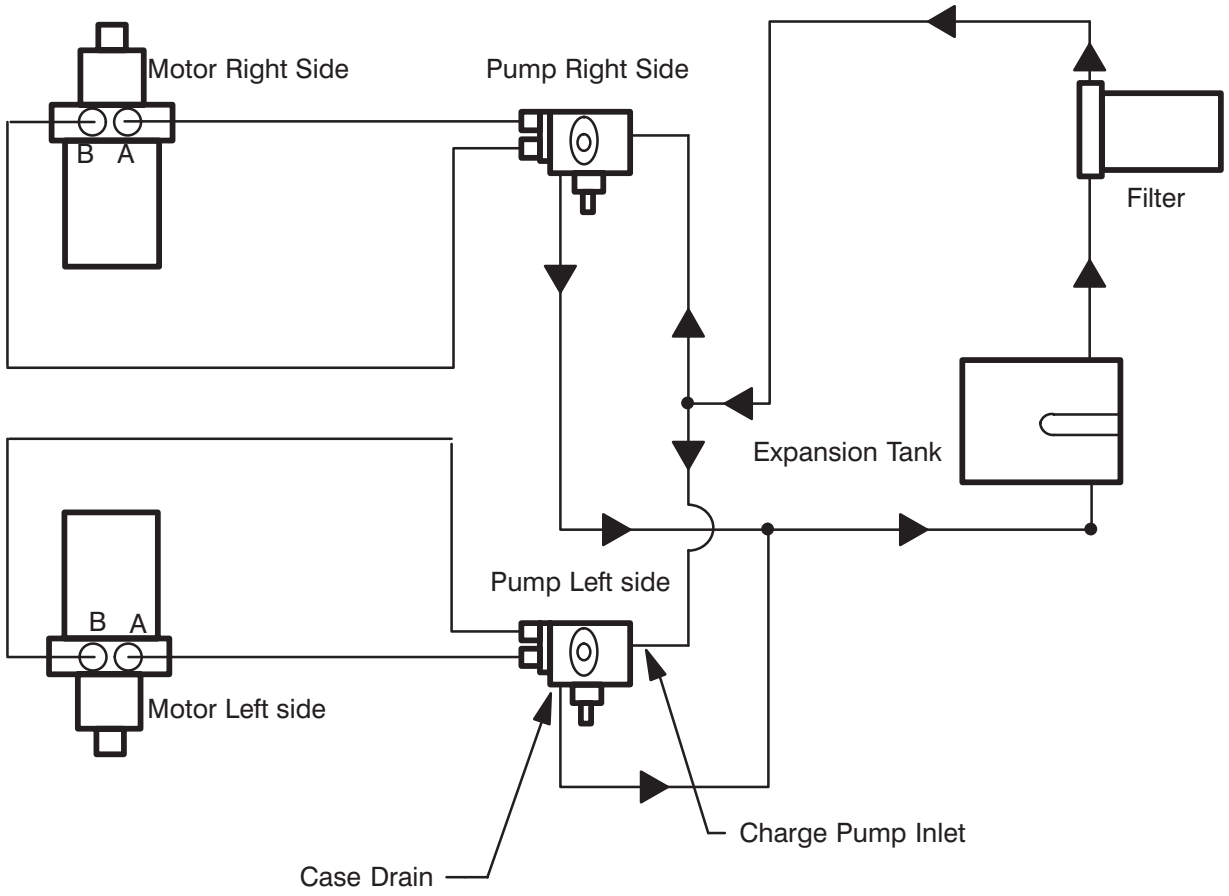

m–5225

Cleaning and Storage

1. Disengage the power take off (PTO) and turn the ignition key to "OFF" to stop the engine. Remove the key.
2. Remove grass clippings, dirt, and grime from the external parts of the entire machine, especially the engine. Clean dirt and chaff from the outside of the engine's cylinder head fins and blower housing.

Important You can wash the machine with mild detergent and water. Do not pressure wash the machine. Avoid excessive use of water, especially near the control panel, engine, hydraulic pumps and motors.

3. Service the air cleaner; refer to Servicing the Air Cleaner, page 25.
4. Change the crankcase oil; refer to Servicing the Engine Oil, page 27.
5. Change the hydraulic filter; refer to Servicing the Hydraulic System on page 31.
6. Check the tire pressure; refer to Checking Tire Pressure, page 29.
7. For storage over 30 days, prepare the traction unit as follows.
   A. Add a petroleum based stabilizer/conditioner to fuel in the tank. Follow mixing instructions from stabilizer manufacturer. **Do not use an alcohol based stabilizer (ethanol or methanol).**

Note: A fuel stabilizer/conditioner is most effective when mixed with fresh gasoline and used at all times.

   B. Run the engine to distribute conditioned fuel through the fuel system (5 minutes).
   C. Stop the engine, allow it to cool and drain the fuel tank; refer to Draining Fuel Tank, page 30.
   D. Restart the engine and run it until it stops.
   E. Choke or prime the engine.
   F. Start and run the engine until it will not start again. Use the primer, if equipped on machine, several times to ensure no fuel remains in primer system.
   G. Dispose of fuel properly. Recycle as per local codes.

Important Do not store stabilizer/conditioned gasoline over 90 days.

8. Remove the spark plug(s) and check its condition; refer to Servicing the Spark Plug on page 27. With the spark plug(s) removed from the engine, pour two tablespoons of engine oil into the spark plug hole. Now use the starter to crank the engine and distribute the oil inside the cylinder. Install the spark plug(s). Do not install the wire on the spark plug(s).
9. Check and tighten all bolts, nuts, and screws. Repair or replace any part that is damaged or defective.
10. Paint all scratched or bare metal surfaces. Paint is available from your Authorized Service Dealer.
11. Store the machine in a clean, dry garage or storage area. Remove the key from the ignition switch and keep it in a memorable place. Cover the machine to protect it and keep it clean.

Troubleshooting

PROBLEM	POSSIBLE CAUSES	CORRECTIVE ACTION
Engine will not start, starts hard, or fails to keep running.	1. Fuel tank is empty.	1. Fill fuel tank with gasoline.
	2. Battery is dead.	2. Charge battery.
	3. Choke is not ON.	3. Move choke lever to ON.
	4. Air cleaner is dirty.	4. Clean or replace air cleaner element.
	5. Spark plug wire is loose or disconnected.	5. Install wire on spark plug.
	6. Spark plug is pitted, fouled, or gap is incorrect.	6. Install new, correctly gapped spark plug.
	7. Dirt in fuel filter.	7. Replace fuel filter.
	8. Dirt, water, or stale fuel is in fuel system.	8. Contact Authorized Service Dealer.

PROBLEM	POSSIBLE CAUSES	CORRECTIVE ACTION
Engine loses power.	1. Engine load is excessive. 2. Air cleaner is dirty. 3. Oil level in crankcase is low. 4. Cooling fins and air passages under engine blower housing are plugged. 5. Spark plug is pitted, fouled, or gap is incorrect. 6. Vent hole in fuel cap is plugged. 7. Dirt in fuel filter. 8. Dirt, water, or stale fuel is in fuel system.	1. Reduce ground speed. 2. Clean air cleaner element. 3. Add oil to crankcase. 4. Remove obstruction from cooling fins and air passages. 5. Install new, correctly gapped spark plug. 6. Clean or replace the fuel cap. 7. Replace fuel filter. 8. Contact Authorized Service Dealer.
Engine overheats.	1. Engine load is excessive. 2. Oil level in crankcase is low. 3. Cooling fins and air passages under engine blower housing are plugged.	1. Reduce ground speed. 2. Add oil to crankcase. 3. Remove obstruction from cooling fins and air passages.
Machine does not drive.	1. Hydrostatic fluid level low. 2. Traction belt is worn, loose or broken. 3. Traction belt is off pulley.	1. Fill hydrostatic fluid tank. 2. Change Belt. 3. Change Belt.
Machine does not drive up hills or inclines.	1. By-pass valve is adjusted too far open.	1. Adjust by-pass valve
Machine moves slowly in neutral.	1. Neutral is mis-adjusted. 2. Return spring is broken or missing. 3. Linkage is dirty or bent.	1. Adjust hydro pump neutral. 2. Replace return spring. 3. Clean and lubricate linkage. Replace bent or worn parts.
Machine drive is too aggressive. Mower lifts when drive is engaged.	1. By-pass valve is adjusted too far closed.	1. Adjust by-pass valve
Abnormal vibration.	1. Cutting blade(s) is/are bent or unbalanced. 2. Blade mounting bolt is loose. 3. Engine mounting bolts are loose. 4. Loose engine pulley, idler pulley, or blade pulley. 5. Engine pulley is damaged. 6. Blade spindle bent.	1. Install new cutting blade(s). 2. Tighten blade mounting bolt. 3. Tighten engine mounting bolts. 4. Tighten the appropriate pulley. 5. Contact Authorized Service Dealer. 6. Contact Authorized Service Dealer.

PROBLEM	POSSIBLE CAUSES	CORRECTIVE ACTION
Uneven cutting height.	1. Blade(s) not sharp.	1. Sharpen blade(s).
	2. Cutting blade(s) is/are bent.	2. Install new cutting blade(s).
	3. Mower is not level.	3. Level mower from side-to-side and front-to-rear.
	4. Underside of mower is dirty.	4. Clean the underside of the mower.
	5. Tire pressure is incorrect.	5. Adjust tire pressure.
	6. Blade spindle bent.	6. Contact Authorized Service Dealer.
Blades do not rotate.	1. PTO Drive belt is worn, loose or broken.	1. Install new drive belt.
	2. PTO Drive belt is off pulley.	2. Install drive belt and check adjusting shafts and belt guides for correct position.
	3. Deck belt is worn, loose or broken.	3. Install new deck belt.
	4. Deck belt is off pulley.	4. Install deck pulley and check the idler pulley, idler arm and spring for correct position and function.

LCE

The Toro Total Coverage Guarantee

A One-Year Limited Warranty

Conditions and Products Covered

The Toro Company and its affiliate, Toro Warranty Company, pursuant to an agreement between them, jointly promise to repair any Toro Product used for commercial, institutional, or rental purposes if defective in materials or workmanship. The following time periods apply from the date of purchase:

Products	Warranty Period
• All Products	1 year
• All Spindles	2 years parts and labor; third year, parts only
• Engines/Hydraulic Systems* on the following: Outfront and Mid-Mount Z's ProLine Mid-Size Mowers Groundsmaster® Riding Mowers Backpack Blowers	2 years
• Deck Shells (36″–72″) on the following: ProLine Mid-Size Mowers Mid-Mount Z's	2 years
• Electric Clutch on 200 Series Mid-Mount Z's	2 years

This warranty includes the cost of parts and labor, but you must pay transportation costs.

This warranty applies to:

- Outfront and Mid-Mount Z's
- ProLine Mid-Size Mowers
- Groundsmaster Riding Mowers
- Turf Maintenance Equipment
- Debris Management Equipment

* Some engines used on Toro LCE Products are warranted by the engine manufacturer.

Instructions for Obtaining Warranty Service

If you think that your Toro Product contains a defect in materials or workmanship, follow this procedure:

1. Contact any Toro Authorized or Master Service Dealer to arrange service at their dealership. To locate a dealer convenient to you, access our website at www.Toro.com. U.S. Customers may also call 800-348-2424.
2. Bring the product and your proof of purchase (sales receipt) to the Service Dealer.

If for any reason you are dissatisfied with the Service Dealer's analysis or with the assistance provided, contact us at:

LCB Customer Service Department
Toro Warranty Company
8111 Lyndale Avenue South
Bloomington, MN 55420-1196
888-577-7466 (U.S. customers)
877-484-9255 (Canada customers)

Owner Responsibilities

You must maintain your Toro Product by following the maintenance procedures described in the operator's manual. Such routine maintenance, whether performed by a dealer or by you, is at your expense.

Items and Conditions Not Covered

There is no other express warranty except for special emission system coverage on some products. This express warranty does not cover the following:

- Cost of regular maintenance service or parts, such as filters, fuel, lubricants, tune-up parts, blade sharpening, brake and clutch adjustments.
- Any product or part which has been altered or misused or required replacement or repair due to normal wear, accidents, or lack of proper maintenance.
- Repairs necessary due to improper fuel, contaminants in the fuel system, or failure to properly prepare the fuel system prior to any period of non-use over three months.
- Pickup and delivery charges.

All repairs covered by this warranty must be performed by an Authorized Toro Service Dealer using Toro approved replacement parts.

General Conditions

Repair by an Authorized Toro Service Dealer is your sole remedy under this warranty.

Neither The Toro Company nor Toro Warranty Company is liable for indirect, incidental or consequential damages in connection with the use of the Toro Products covered by this warranty, including any cost or expense of providing substitute equipment or service during reasonable periods of malfunction or non-use pending completion of repairs under this warranty.

Some states do not allow exclusions of incidental or consequential damages, or limitations on how long an implied warranty lasts, so the above exclusions and limitations may not apply to you.

All implied warranties of merchantability (that the product is fit for ordinary use) and fitness for use (that the product is fit for a particular purpose) are limited to the duration of the express warranty.

This warranty gives you specific legal rights, and you may also have other rights which vary from state to state.

Countries Other than the United States or Canada

Customers who have purchased Toro products exported from the United States or Canada should contact their Toro Distributor (Dealer) to obtain guarantee policies for your country, province, or state. If for any reason you are dissatisfied with your Distributor's service or have difficulty obtaining guarantee information, contact the Toro importer. If all other remedies fail, you may contact us at Toro Warranty Company.

Part No. 374-0037 Rev. B