Form No. 3445-600 Rev B

TORO®

Count on it.

Parts Catalog

22in Recycler®

Lawn Mower

Model No. 21447—Serial No. 400000000 and Up

Register at www.Toro.com.
Original Instructions (EN)

3445-600 B

Ordering Replacement Parts

To order replacement parts, please supply the part number, the quantity, and the description of each part desired.

Understanding Reference Numbers

Each identified part in an illustration has a reference number. The reference number for a part also appears in the parts list, along with other information about the part.

This catalog uses two special reference number formats, one to indicate parts in a service assembly and another to indicate the quantity of a given part in an illustration.

Service Assembly Reference Numbers

Parts in service assemblies have reference numbers in the form a:b. The a represents the reference number of the entire service assembly and the b represents a sequential number unique to each part within the service assembly.

For example, a wheel assembly might be identified by reference number 6, the tire by 6:1, the valve by 6:2, and the wheel by 6:3. When you order the assembly identified by reference number 6, you receive all parts identified by reference numbers 6:1,6:2, and 6:3. However, you may also order any part individually. Reference numbers of this type appear in illustration and in parts lists.

Reference Numbers Indicating Quantity

In an illustration, if a reference number indicates more than one part, the reference number has the form nX y. The n represents the quantity of the part, the X is the multiplication symbol, and the y represents the reference number.

For example, in an illustration, the reference number 2X 37 means that two of the parts identified by reference number 37 are indicated.

Contents

Housing Assembly 4
Rear Bag Assembly 6
Decal Assembly 8
Engine and Blade Assembly 10
Front Wheel and Height-of-Cut Assembly 12
Rear Wheel and Height-of-Cut Assembly 14
Handle Assembly 16
Attachments and Accessories 18

© 2021—The Toro® Company
8111 Lyndale Avenue South
Bloomington, MN 55420

Contact us at www.Toro.com.
Printed in the USA.
All Rights Reserved

Housing Assembly

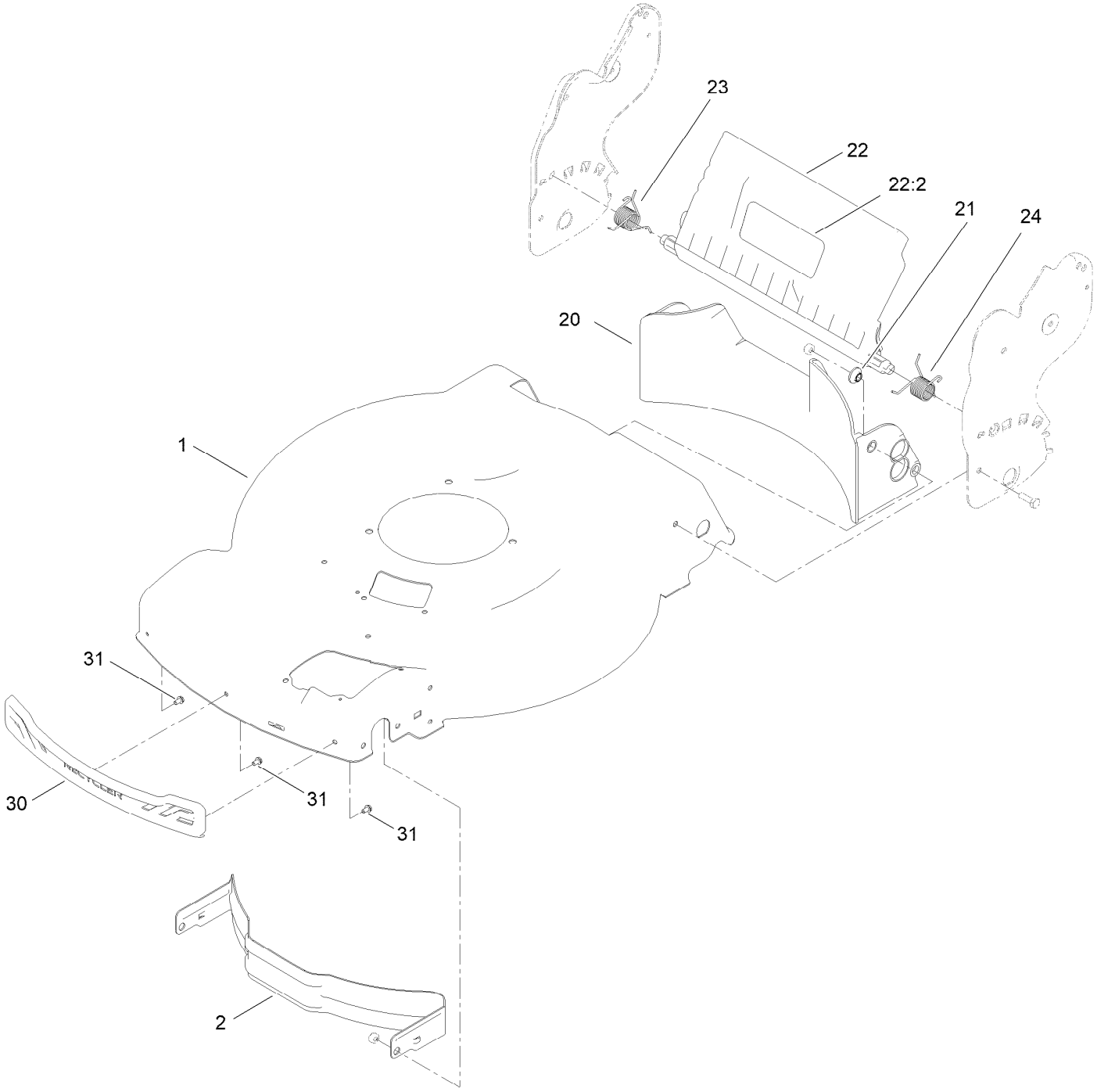

Housing Assembly (continued)

Ref.	Part Number	Qty.	Description
1	144-3191	1	Housing ASM
2	114-7963-01	1	Baffle-Front
20	140-3906	1	Baffle-Rear, Fwd
21	117-5991	2	Washer-Stepped, Baffle
22	136-7003	1	Rear Deflector ASM
22:2	131-4514	1	Decal-Warning
23	140-4197	1	Spring-Torsion
24	140-4198	1	Spring-Torsion
30	139-5457	1	Bumper-Front
31	139-5467	3	Screw-Plastic, HWH

Rear Bag Assembly

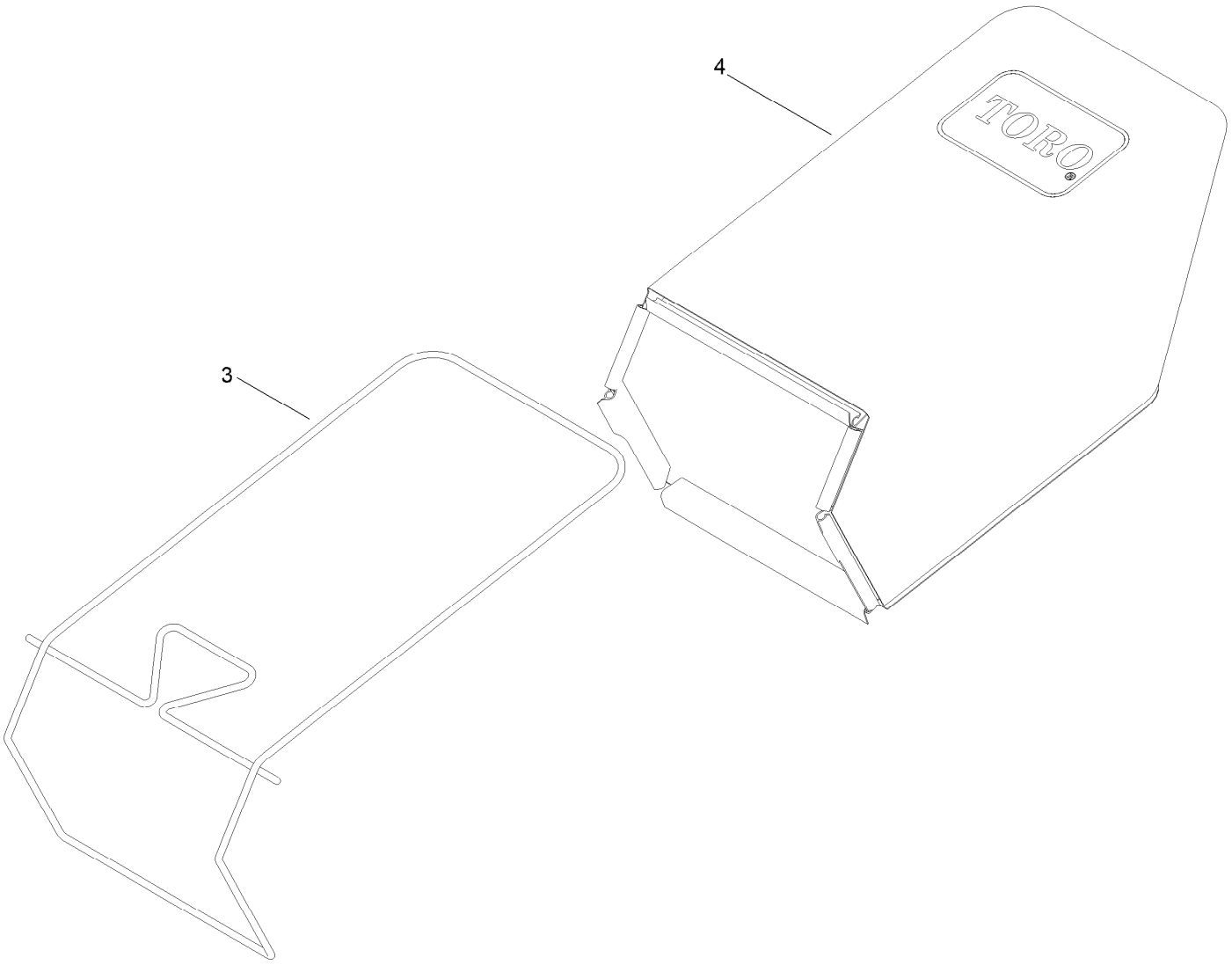

Rear Bag Assembly (continued)

Ref.	*Part Number*	*Qty.*	*Description*
3	140-3931-03	1	Bag Frame ASM (Welded)
4	140-3933	1	Grass Bag ASM

Decal Assembly

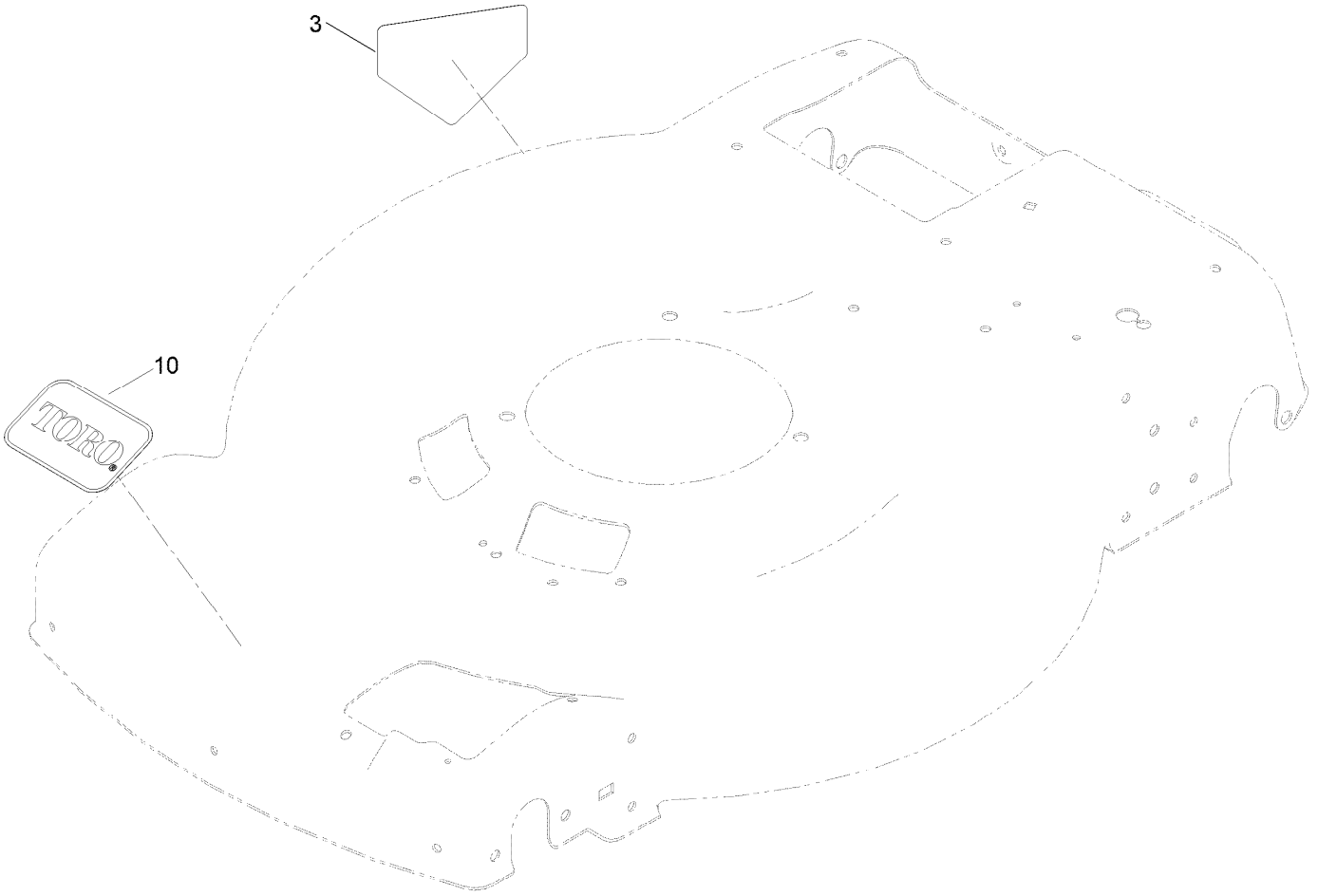

Decal Assembly (continued)

Ref.	*Part Number*	*Qty.*	*Description*
3	94-8072	1	Decal-Danger
10	140-4183	1	Decal

Engine and Blade Assembly

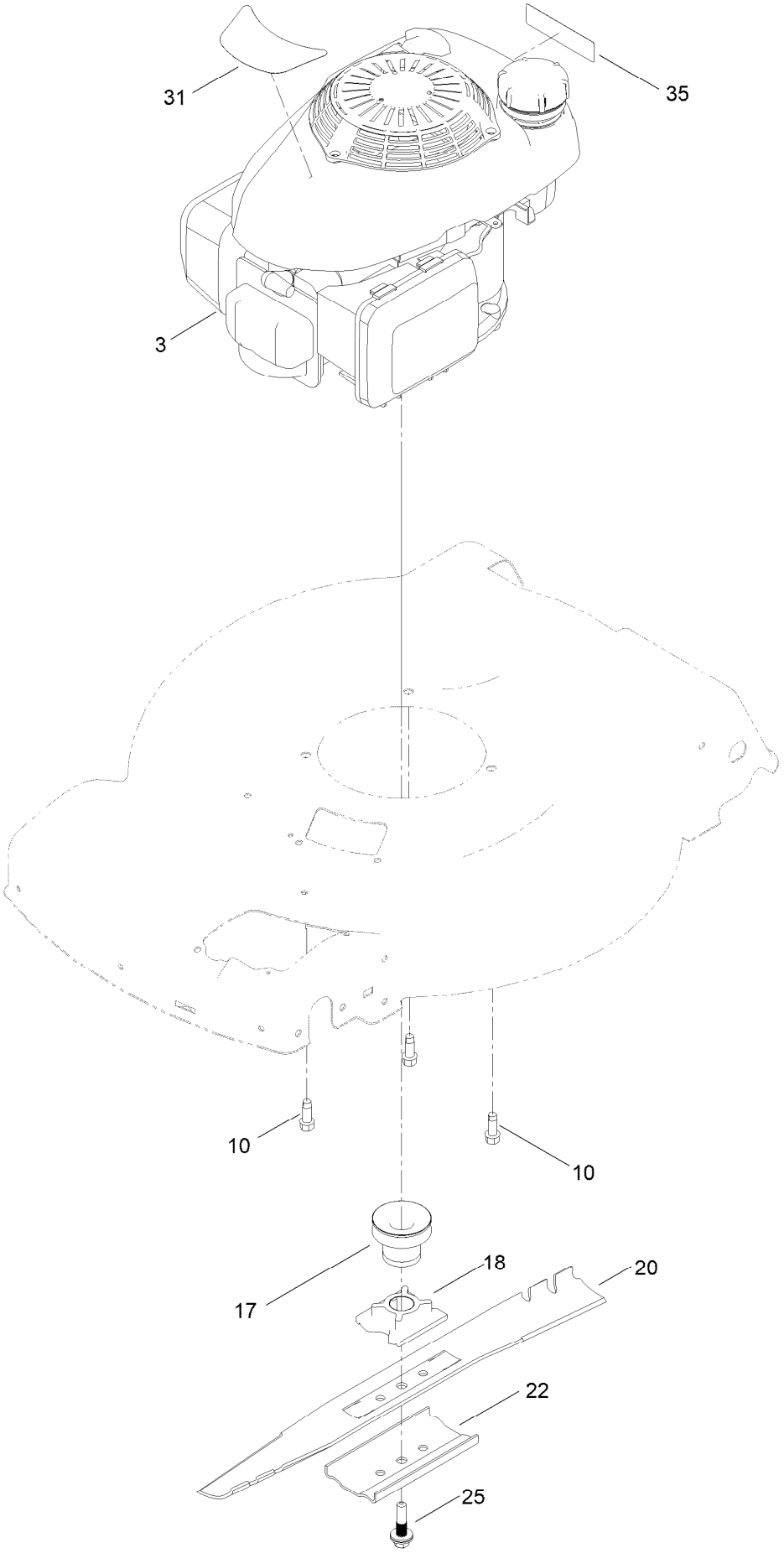

Engine and Blade Assembly (continued)

Ref.	Part Number	Qty.	Description
3		1	Engine-Honda, Gcv160La0 S3B ●■
10	95-1726	3	Screw-Taptite
17	145-1452	1	Driver-Blade
18	130-6674	1	Retainer-Blade
20	131-4547-03	1	Blade-22 Inch
22	108-3766-03	1	Support-Blade
25	117-5270	1	Bolt-Blade
31	140-4189	1	Decal-Engine
35	133-8062	1	Decal-Arrestor, Spark

● Not serviced separately

■ Obtain parts from www.honda-engines.com

Front Wheel and Height-of-Cut Assembly

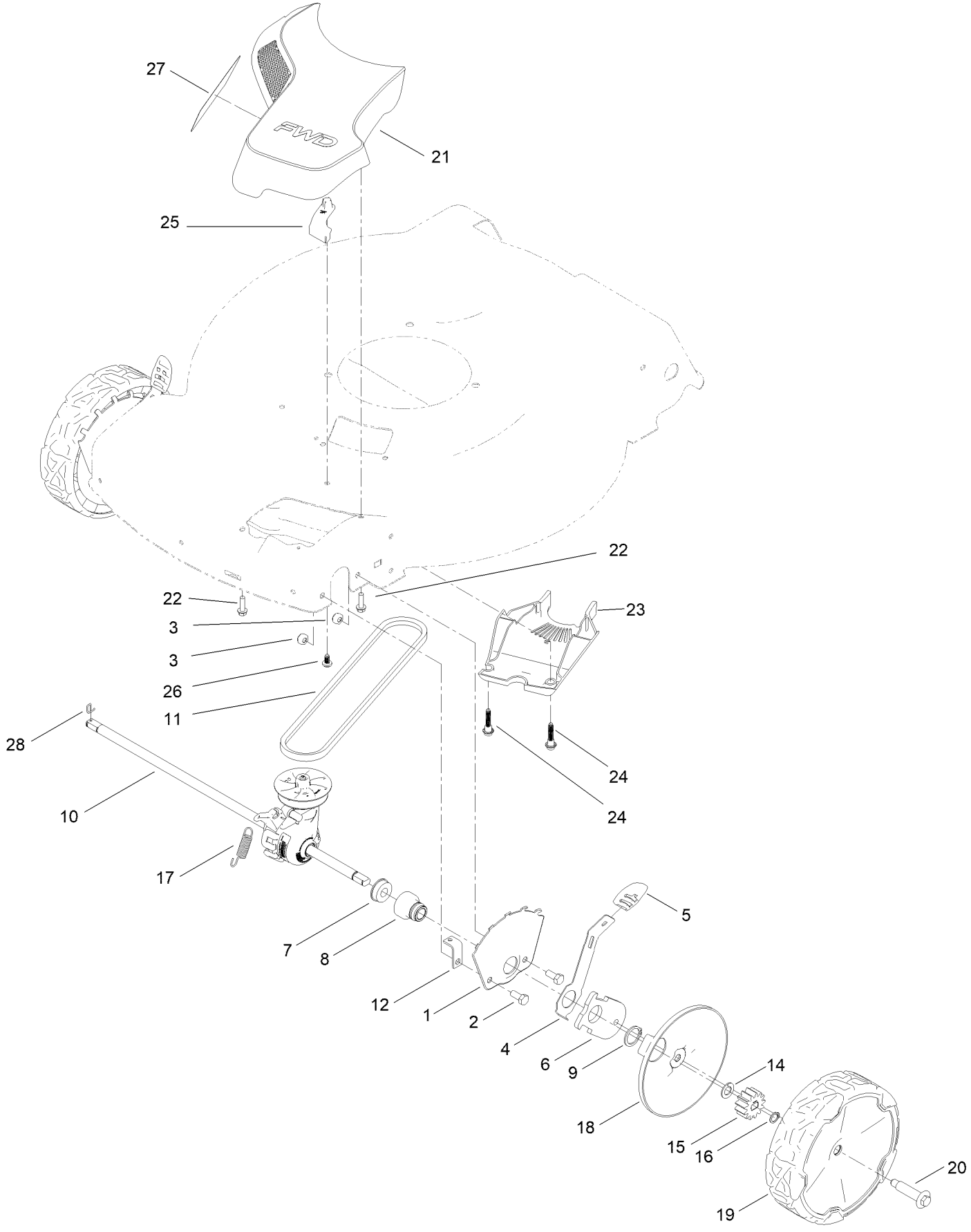

Front Wheel and Height-of-Cut Assembly (continued)

Ref.	Part Number	Qty.	Description
1	115-1956-05	2	Plate-HOC,Front Fsvq Wednesday
2	322-3	4	Screw-HH
3	3296-29	4	Nut-Lock, NI
4	105-1809	2	Arm-Spring
5	105-3042	2	Knob-Lever, HOC
6	137-9128	2	Arm-Pivot, Front
7	104-8699	2	Bearing-Ball
8	131-0836	2	Retainer-Bearing, HOC
9	32151-36	2	Ring-Retaining
10	139-6562	1	Transmission-Fwd
11	117-1018	1	V-Belt
12	144-6392	1	Tab-Mount, Cable
14	110-7191	2	Washer-Thrust
15	131-0896	2	Gear-Pinion, 13T
16	32151-61	1	Ring-Retaining
17	144-6389	1	Spring-Extension
18	140-2364	2	ASM-Cover, Wheel (Dk Gray)
19	140-2358	2	ASM-8" Wheel, Fwd (Bushings)
20	139-1789	2	Wheel Bolt
21	144-0215	1	ASM-Intake, Fwd
22	46-8091	3	Screw-HWH
23	140-2388	1	Cover-Belt, Lower (Fwd)
24	131-0837	2	Screw-Shoulder, HHF
25	144-6371	1	Pad-Stop
26	139-1679	1	Screw-Plastic,PH
27	140-4186	1	Decal
28	130-2369	1	Pin-Snap

Rear Wheel and Height-of-Cut Assembly

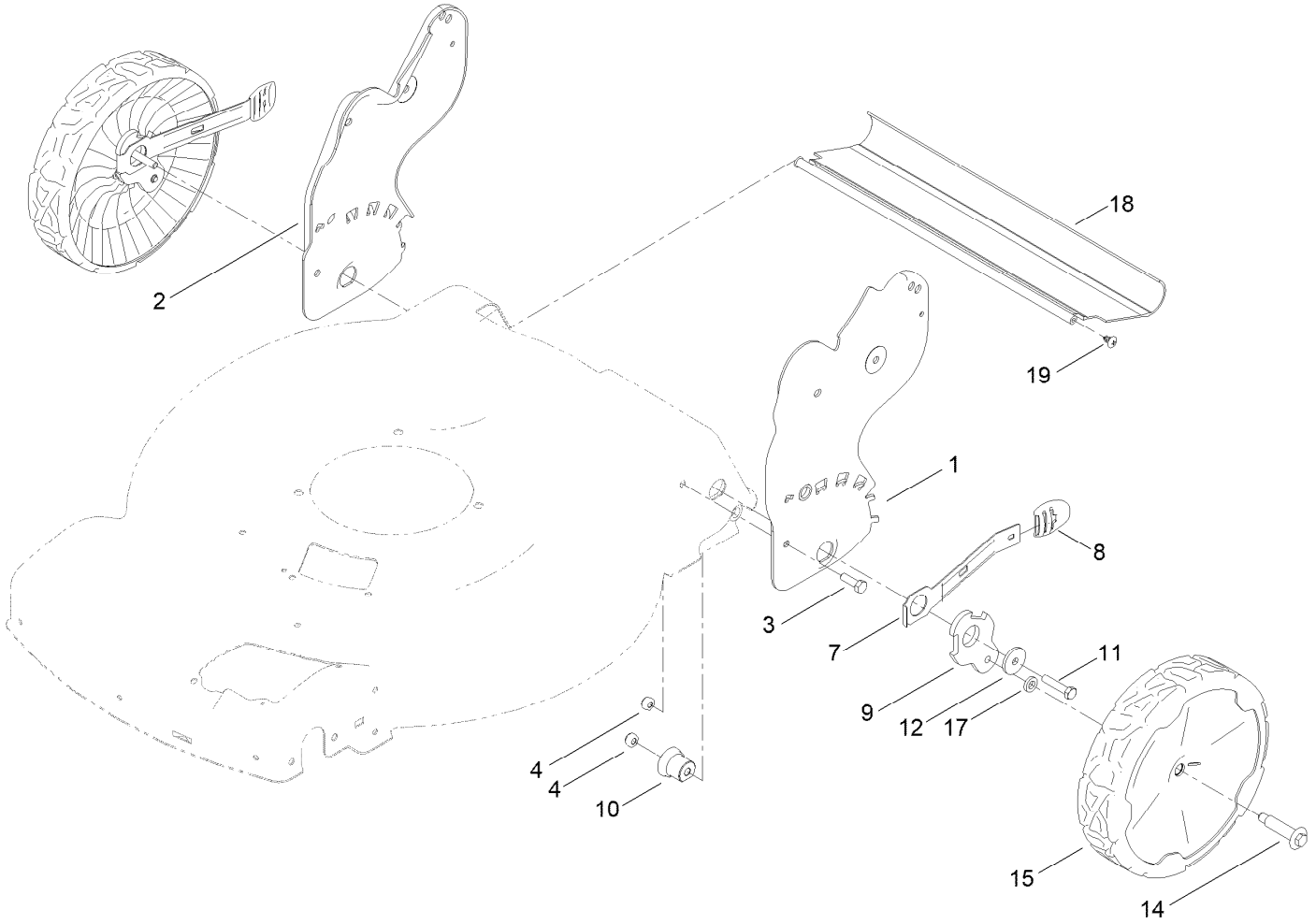

Rear Wheel and Height-of-Cut Assembly (continued)

Ref.	Part Number	Qty.	Description
1	140-3912-05	1	Plate-HOC, Fwd LH
2	140-3913-05	1	Plate-HOC, Fwd RH
3	322-5	2	Screw-HH
4	3296-29	4	Nut-Lock, NI
7	115-2899	2	Arm-Spring, Rear
8	105-3042	2	Knob-Lever, HOC
9	140-3878	2	Arm-Pivot, Rear
10	131-0895	2	Bushing-Mount, HOC
11	322-7	2	Screw-HH
12	105-3048	2	Washer-Flat
14	139-1789	2	Wheel Bolt
15	140-2351	2	ASM-9.65" Wheel, Bushings
17	139-5449	2	Washer-Wheel Bolt
18	144-6431	1	Shield-Trailing
19	117-1092	2	Screw-PTH

Handle Assembly

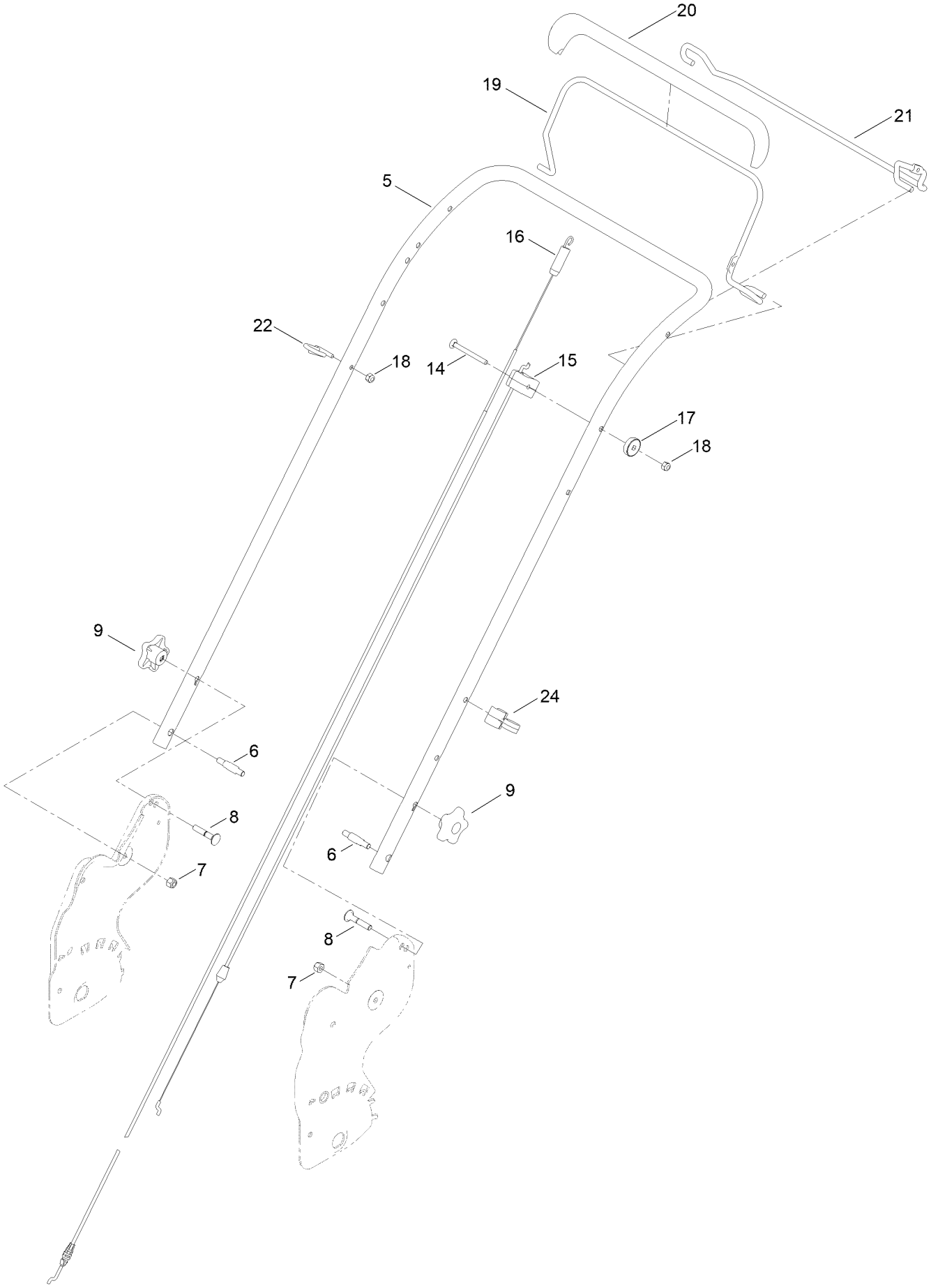

Handle Assembly (continued)

Ref.	Part Number	Qty.	Description
5	139-5458-05	1	Handle-Curved
6	139-6599	2	Bolt-Shoulder, Handle
7	3296-29	2	Nut-Lock, NI
8	131-9663	2	Screw-CARR
9	117-5976	2	Knob-Handle
14	144-0221	1	Screw-CARR
15	140-3972	1	Cable-Brake, Fwd
16	140-3947	1	Cable-Traction, Fwd
17	136-9075	1	Washer-Curved
18	3296-73	2	Nut-Lock, NI
19	140-3918-03	1	Bail-Brake
20	140-3879	1	Cover-Bail
21	140-4024-03	1	Bail-Traction
22	86-9671	1	Guide-Rope
24	114-7988	1	Guide-Cable

Attachments and Accessories

For 21447 22in Recycler Lawn Mower

Product Name	Model/Part
Fuel Stabilizer .05 oz	130-2393
Briggs Maint Kit	130-8148
4-Cycle Fuel, Snow And Lawn 32oz Can	131-3823
Toro Premium Fuel Treatment 12 Oz Bottle	131-6572
Oil-30/10W-30 Synthetic (Quart)	138-6053
SD Chute ASM	145-1538
Lawn Striping Kit with 22in Roller	20601
Toro 4-Cycle SAE 30 Oil (32oz Bottle)	38903
Summer Oil-Case of 24 (20oz Bottles)	38916
Smart Stow Walk Power Mower Cover	490-2012
Bag-Walk Behind (Toro)	490-7318
Lawnmower Cover	490-7462
22 Inch Atomic Blade	59534P

Notes:



Count on it.