Form No. 3371-339 Rev C

TORO®

Count on it.

Parts Catalog

Groundsmaster® 3505-D

Traction Unit

Model No. 30849—Serial No. 312000001 and Up

Register at www.Toro.com.
Original Instructions (EN)

CE

3371-339 C

Ordering Replacement Parts

To order replacement parts, please supply the part number, the quantity, and the description of each part desired.

Understanding Reference Numbers

Each identified part in an illustration has a reference number. The reference number for a part also appears in the parts list, along with other information about the part.

This catalog uses two special reference number formats, one to indicate parts in a service assembly and another to indicate the quantity of a given part in an illustration.

Service Assembly Reference Numbers

Parts in service assemblies have reference numbers in the form a:b. The a represents the reference number of the entire service assembly and the b represents a sequential number unique to each part within the service assembly.

For example, a wheel assembly might be identified by reference number 6, the tire by 6:1, the valve by 6:2, and the wheel by 6:3. When you order the assembly identified by reference number 6, you receive all parts identified by reference numbers 6:1,6:2, and 6:3. However, you may also order any part individually. Reference numbers of this type appear in illustration and in parts lists.

Reference Numbers Indicating Quantity

In an illustration, if a reference number indicates more than one part, the reference number has the form nX y. The n represents the quantity of the part, the X is the multiplication symbol, and the y represents the reference number.

For example, in an illustration, the reference number 2X 37 means that two of the parts identified by reference number 37 are indicated.

Contents

Frame Assembly . . . 5
Front Wheel and Brake Assembly . . . 6
Brake Assembly No. 104-7705 . . . 8
Steering Column Assembly . . . 9
Steering Valve Assembly No. 104-5180 . . . 10
Rear Fork and Tire Assembly . . . 11
Hydraulic Cylinder Assembly No. 94-8141 . . . 13
Control Panel Assembly . . . 14
Front Platform Assembly . . . 15
Traction Pedal Assembly . . . 16
Control Valve Assembly . . . 17
Single Spool Control Valve Assembly No. 95-8689 . . . 18
Rear Lift Arm Assembly . . . 19
Hydraulic Cylinder Assembly No. 112-9916 . . . 21
Neutral Arm Assembly . . . 22
Engine Assembly . . . 23
Air Cleaner and Muffler Assembly . . . 25
Air Cleaner Assembly No. 93-2190 . . . 26
Radiator Assembly . . . 27
Hood Assembly . . . 28
Fuel System Assembly . . . 29
Manifold Block Installation Assembly . . . 31
Manifold Block Assembly No. 115-3486 . . . 32
Hydraulic Tank Assembly . . . 33
Hydrostat Assembly . . . 34
Hydraulic Pump Assembly No. 104-4890 . . . 36
Hydraulic Gear Pump Assembly No. 108-9036 . . . 38
Carrier Assembly . . . 39
Seat Mounting Assembly . . . 41
Rotary Motor Assembly . . . 42
Gear Motor Assembly No. 117-5141 . . . 43
Battery Assembly . . . 44
Parking Brake Assembly . . . 45
Crankcase Assembly . . . 46
Oil Pan Assembly . . . 47
Cylinder Head Assembly . . . 48
Gear Case and Oil Filter Cartridge Assembly . . . 49
Cylinder Head Cover Assembly . . . 50
Dipstick and Guide Assembly . . . 51
Main Bearing Case Assembly . . . 52
Camshaft and Idle Gear Shaft Assembly . . . 53
Piston and Crankshaft Assembly . . . 54
Flywheel Assembly . . . 55
Fuel Camshaft and Governor Shaft Assembly . . . 56
Idle Apparatus and Stop Solenoid Assembly . . . 57
Injection Pump Assembly . . . 58
Governor Assembly . . . 59
Speed Control Plate Assembly . . . 60
Nozzle Holder and Glow Plug Assembly . . . 61
Nozzle Holder Assembly . . . 62
Alternator and Pulley Assembly . . . 63
Alternator Components Assembly . . . 64
Starter Assembly . . . 65
Starter Component Assembly . . . 66

© 2021—The Toro® Company

8111 Lyndale Avenue South
Bloomington, MN 55420

Contact us at www.Toro.com.
Printed in the USA.

All Rights Reserved

Contents (continued)

Water Flange and Thermostat Assembly 67
Water Pump Assembly 68
Valve and Rocker Arm Assembly 69
Inlet and Exhaust Manifold Assembly 70
Miscellaneous Engine Parts 71
Upper and Lower Gasket Kits 72
Attachments and Accessories 73

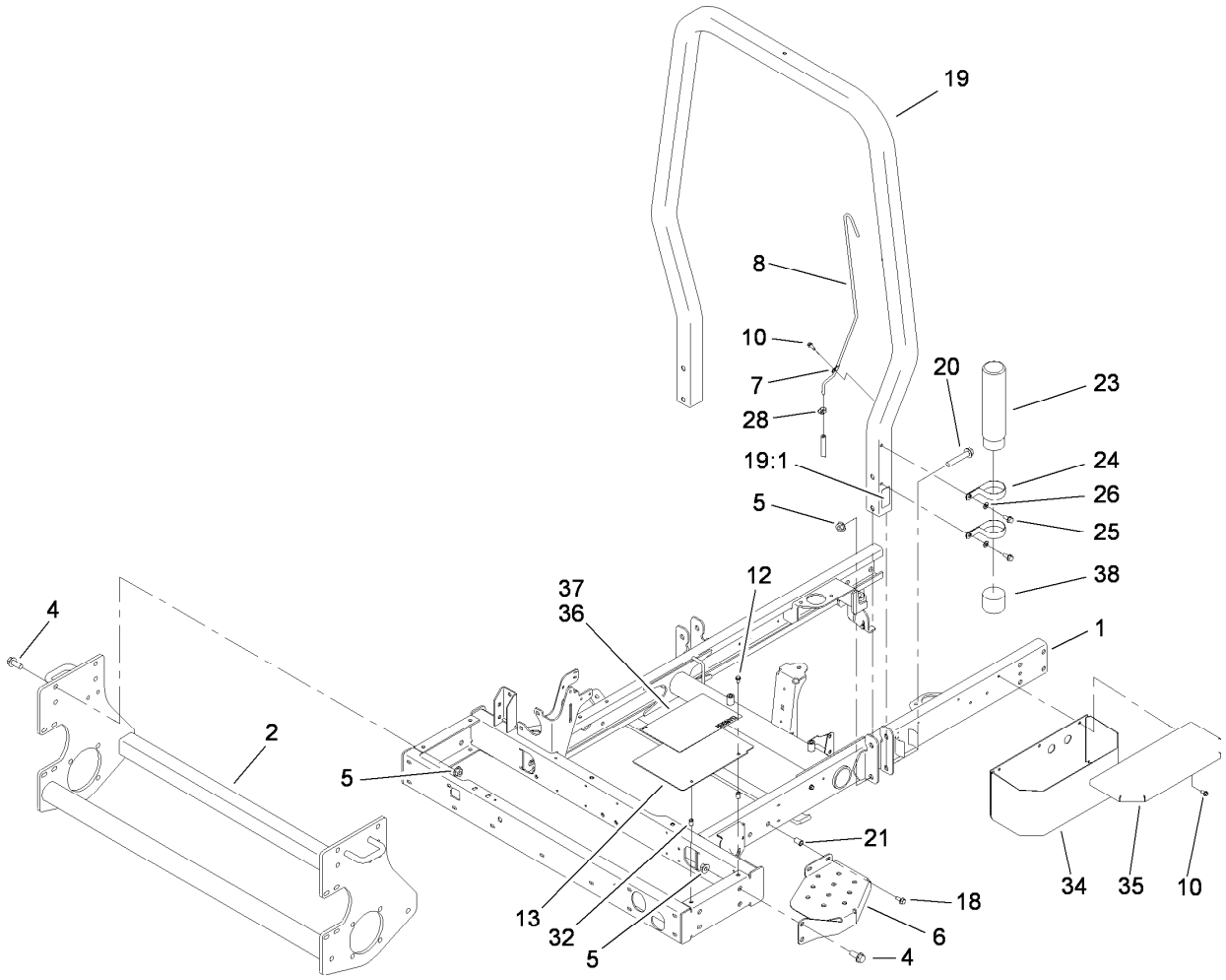

Frame Assembly

Ref.	Part Number	Qty.	Description
1	99-3610-03	1	Frame
2	95-8568-03	1	Frame-Lower
4	3234-38	8	Screw-HHF
5	32128-49	12	Nut-HHF
6	99-3375-03	1	Step
7	2412-72	3	Clip-Closed, Insulated
8	95-8615	1	Tube-Breather
10	32144-10	6	Screw-HWH
12	3234-4	2	Screw-HHF
13	104-0468-01	1	Cover-Frame
18	3234-5	2	Screw-HHF
19	107-7833	1	ROPS ASM
19:1	107-7831	1	Decal-ROPS

Ref.	Part Number	Qty.	Description
20	3234-40	4	Screw-HF
21	32148-8	2	Nut-Clinch
23	104-7050	1	Tube-Manual
24	2412-133	2	Clamp-R
25	32144-70	2	Screw-HWHTF
26	3256-23	2	Washer-Plain
28	2412-108	1	Clamp-Worm
32	32148-6	2	Nut-Clinch
34	104-4634-03	1	Toolbox
35	104-4633-03	1	Cover-Toolbox
36	108-9015	1	Decal-Danger
37	104-5181	1	Decal-Danger, CE
38	104-7048	1	Cap-Housing

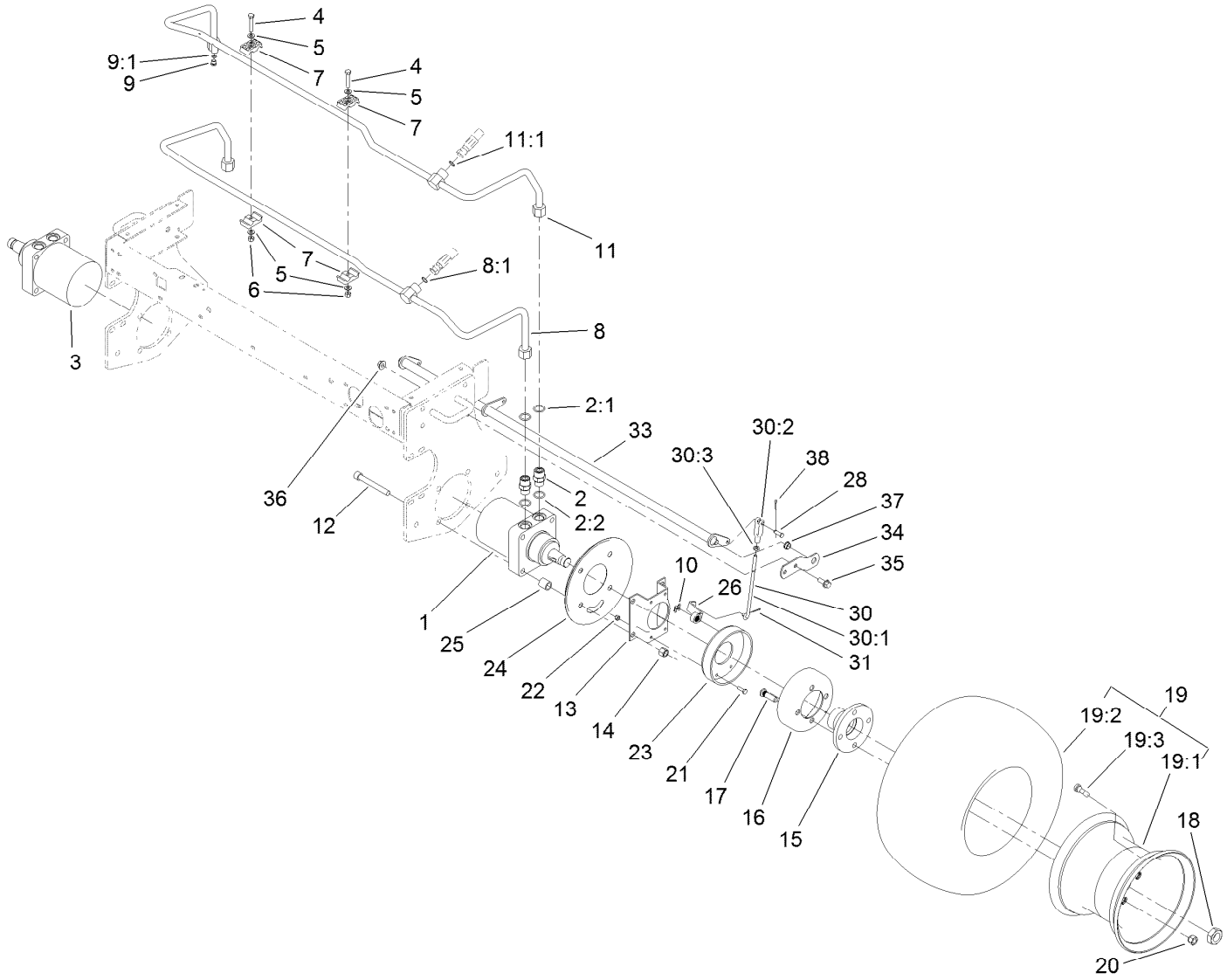

Front Wheel and Brake Assembly

Ref.	Part Number	Qty.	Description
1	110-8785	1	HYD Motor ASM (CCW)
2	340-7	4	Fitting-Straight
2:1	237-65	1	O-Ring
2:2	237-80	1	O-Ring
3	110-8786	1	HYD Motor ASM (CW)
4	322-9	2	Screw-HH
5	3256-23	4	Washer-Plain
6	3296-29	2	Nut-Lock, NI
7	56-7971	4	Clamp-Tube
8	95-8783	1	Tube ASM
8:1	237-65	1	O-Ring
9	353-990	1	Plug ASM
9:1	237-78	1	O-Ring
10	104-7706	2	E-Ring, Bowed
11	95-8784	1	Tube ASM
11:1	237-65	1	O-Ring
12	3274-99	8	Screw-HSH
13	84-2000-03	2	Bracket-Brake

Ref.	Part Number	Qty.	Description
14	3296-23	8	Nut-Lock, NI
15	93-6838	2	Hub-Wheel
16	10-6850	2	Drum-Brake
17	85-6540	8	Stud-Drive
18	26-3790	2	Nut-Lock
19		2	Rim And Tire ASM ●
19:1	117-5131	1	Rim
19:2	115-1572	1	Tire
19:3	232-27	1	Stem-Valve
20	242-50	8	Nut-Lug
21	321-5	8	Screw-HH
22	3296-42	8	Nut-Lock, NI
23	104-7705	2	Brake ASM
24	104-0485-03	2	Shield-Wheel
25	119-8238	8	Spacer-Deck Pulley
26	114-2726	2	Lever-Brake
28	283-1	2	Pin-Clevis
30	115-6672	2	Brake Lever ASM

● Not serviced separately

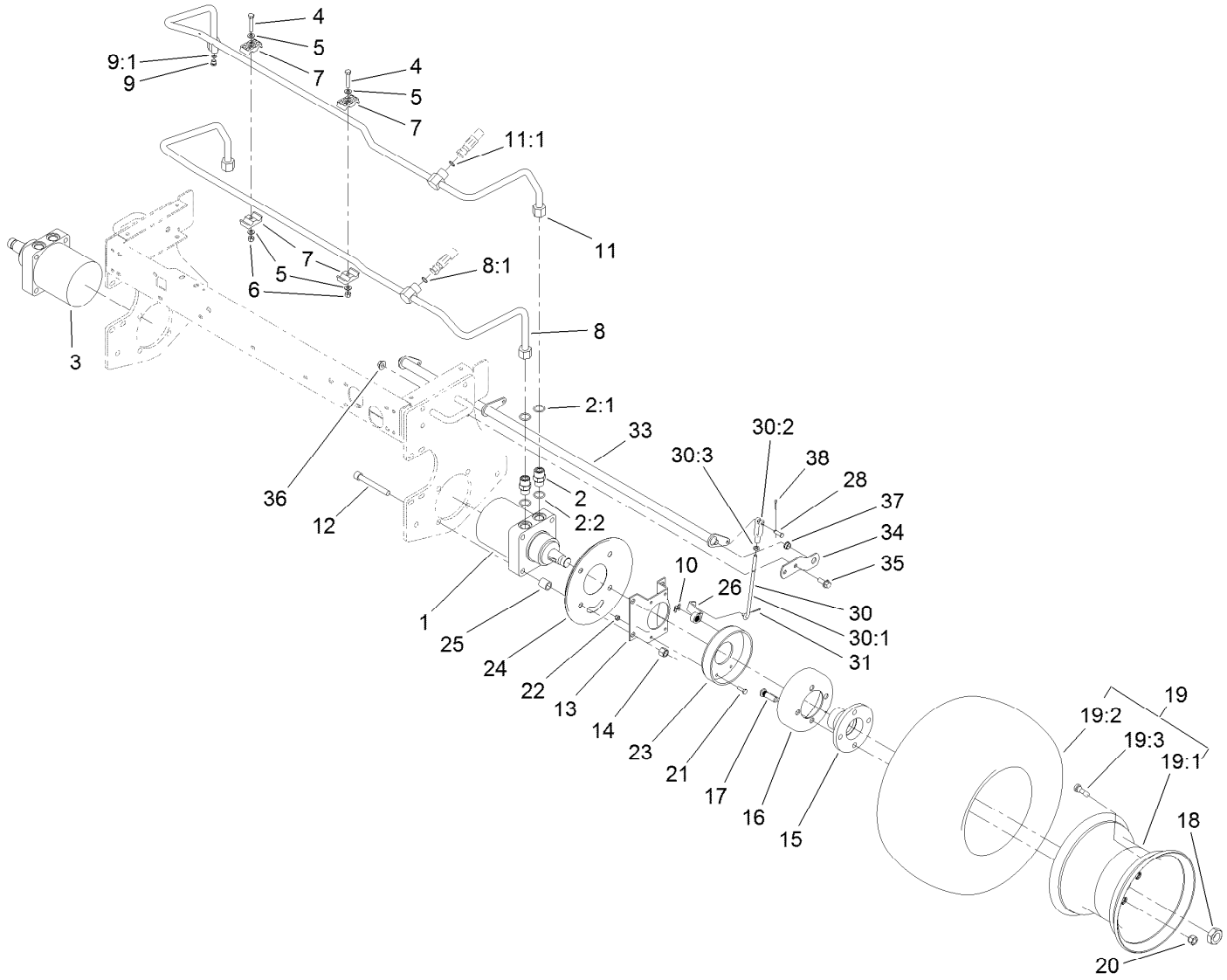

Front Wheel and Brake Assembly (continued)

Ref.	Part Number	Qty.	Description
30:1	104-4627	1	Rod-Adjusting
30:2	1-303105	1	Yoke-Adjustable
30:3	3220-2	1	Nut-Jam
31	3272-6	2	Pin-Cotter
33	104-4625-03	1	Shaft-Pivot, Brake

Ref.	Part Number	Qty.	Description
34	95-8683	2	Bracket-Pivot, Brake
35	3234-11	4	Screw-HHF
36	32128-43	4	Nut-Flange
37	256-156	2	Bushing-Flange
38	3272-10	2	Pin-Cotter

● Not serviced separately

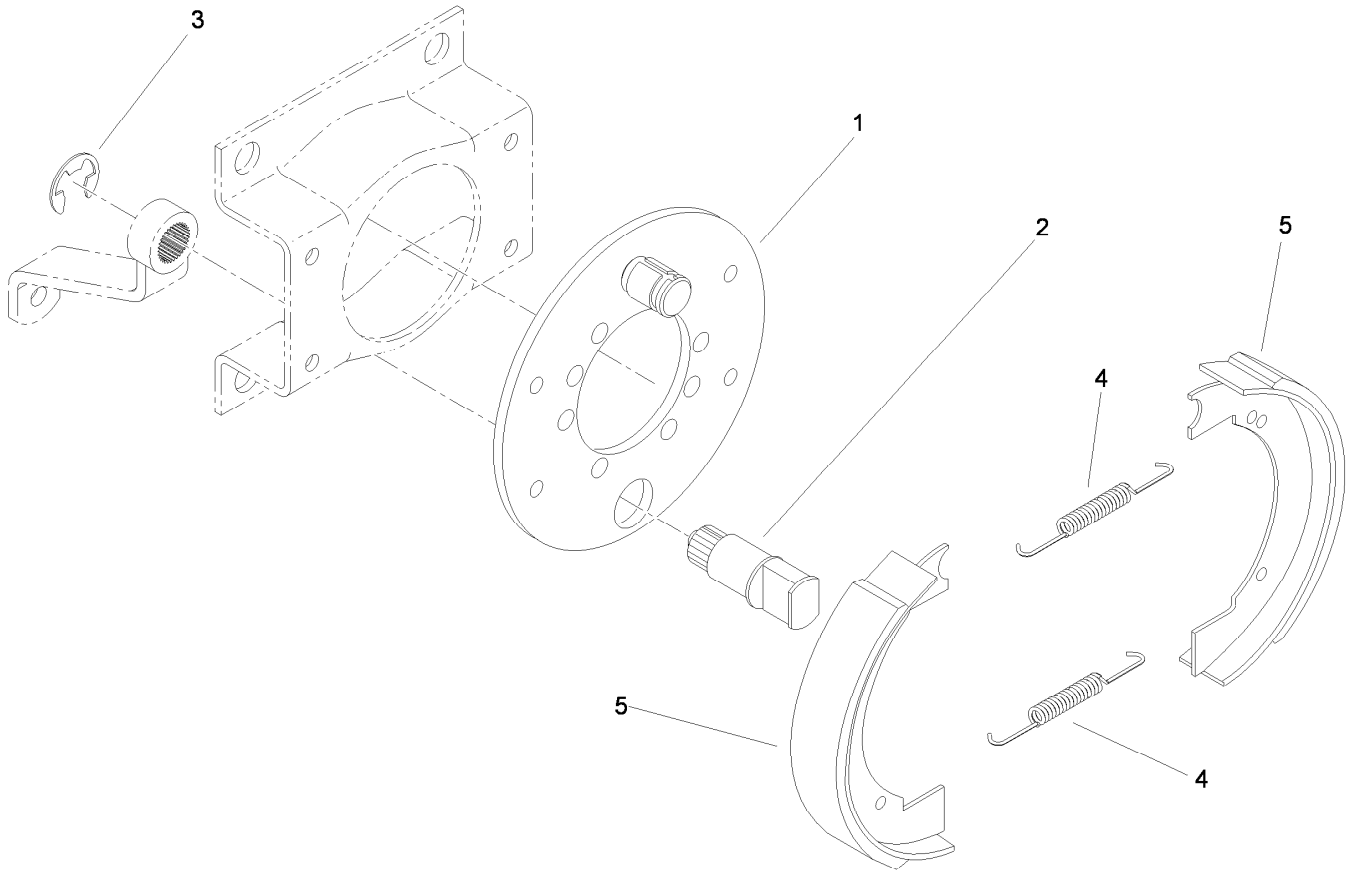

Brake Assembly No. 104-7705

Ref.	*Part Number*	*Qty.*	*Description*
1	70-9870	1	Plate-Backing
2	104-7707	1	Shaft-Cam, Brake
3	104-7706	1	E-Ring, Bowed
4	70-9880	2	Spring-Return
5	70-9840	2	Shoe-Brake

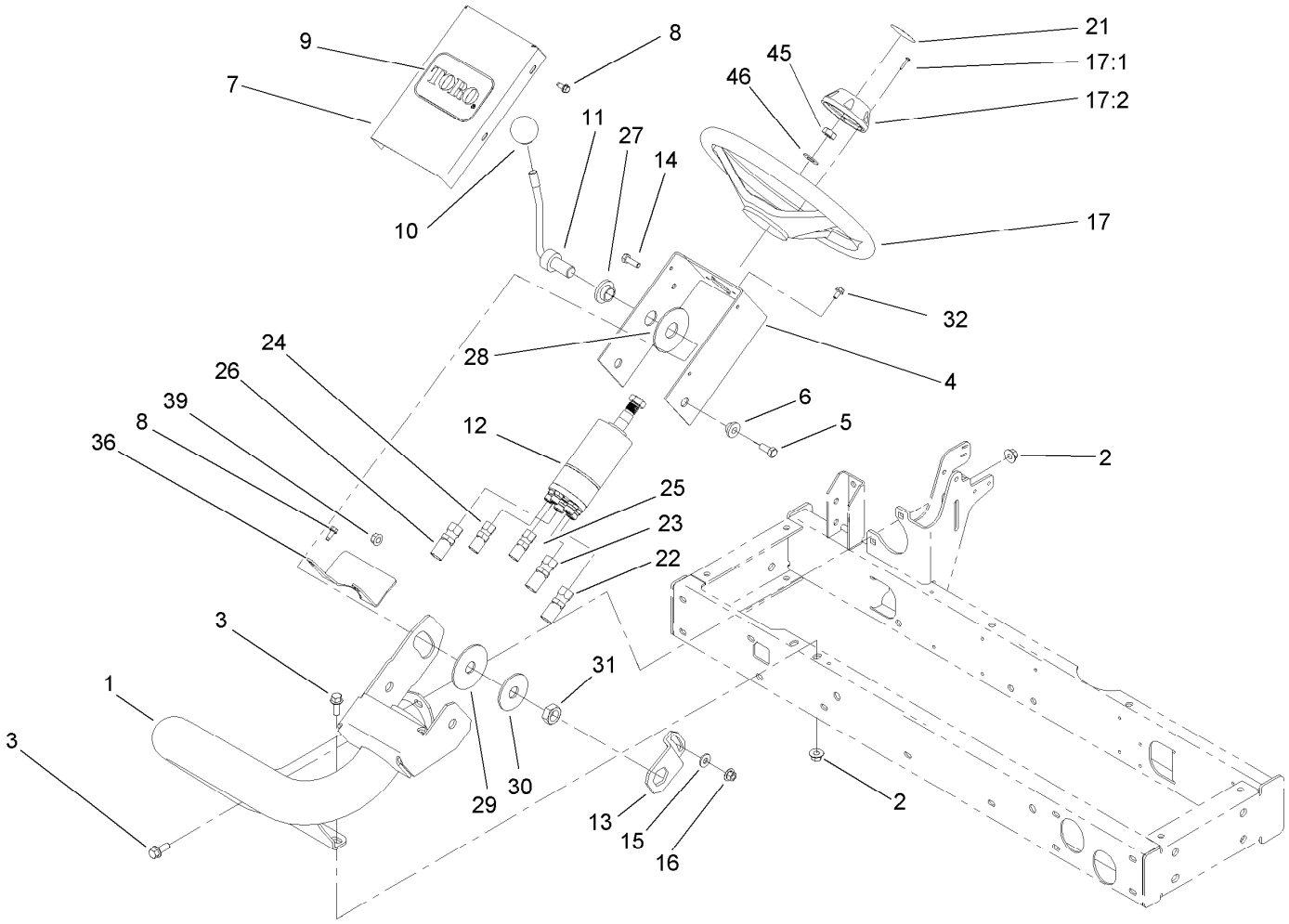

Steering Column Assembly

Ref.	Part Number	Qty.	Description
1	108-9003-01	1	Arm-Steering
2	32128-43	4	Nut-Flange
3	3234-11	4	Screw-HHF
4	104-5185-01	1	Bracket-Valve, Steering
5	323-5	2	Screw-HH
6	93-5988	2	Hub-Pivot
7	95-8794-01	1	Cover-Valve, Steering
8	32144-10	5	Screw-HWH
9	67-1300	1	Decal
10	233-48	1	Knob
11	95-8798-03	1	Lever-Steering
12	104-5180	1	Steering Valve ASM
13	80-2880	1	Bracket-Tilt
14	322-5	1	Screw-HH
15	3256-3	1	Washer-Flat
16	32128-44	1	Nut
17	75-0560	1	Steering Wheel ASM
17:1	32144-21	1	Screw

Ref.	Part Number	Qty.	Description
17:2	68-5140	1	Cap-Wheel, Steering
21	68-5370	1	Decal
22	95-8842	1	Hose-HYD
23	95-8843	1	Hose-HYD
24	100-4892	1	Hose-HYD
25	100-4893	1	Hose-HYD
26	95-8846	1	Hose-HYD
27	99-3502	1	Boss
28	31-0390	1	Disc-Friction
29	82-9010	1	Disc-Friction
30	80-2930	1	Washer-Flat
31	3218-7	1	Nut-Jam
32	33103-012	4	Screw-HHF
36	99-3405-01	1	Shield-Steering
39	32128-21	2	Nut-HF Lock
45	3296-33	1	Nut-Lock, NI
46	3256-27	1	Washer-Flat

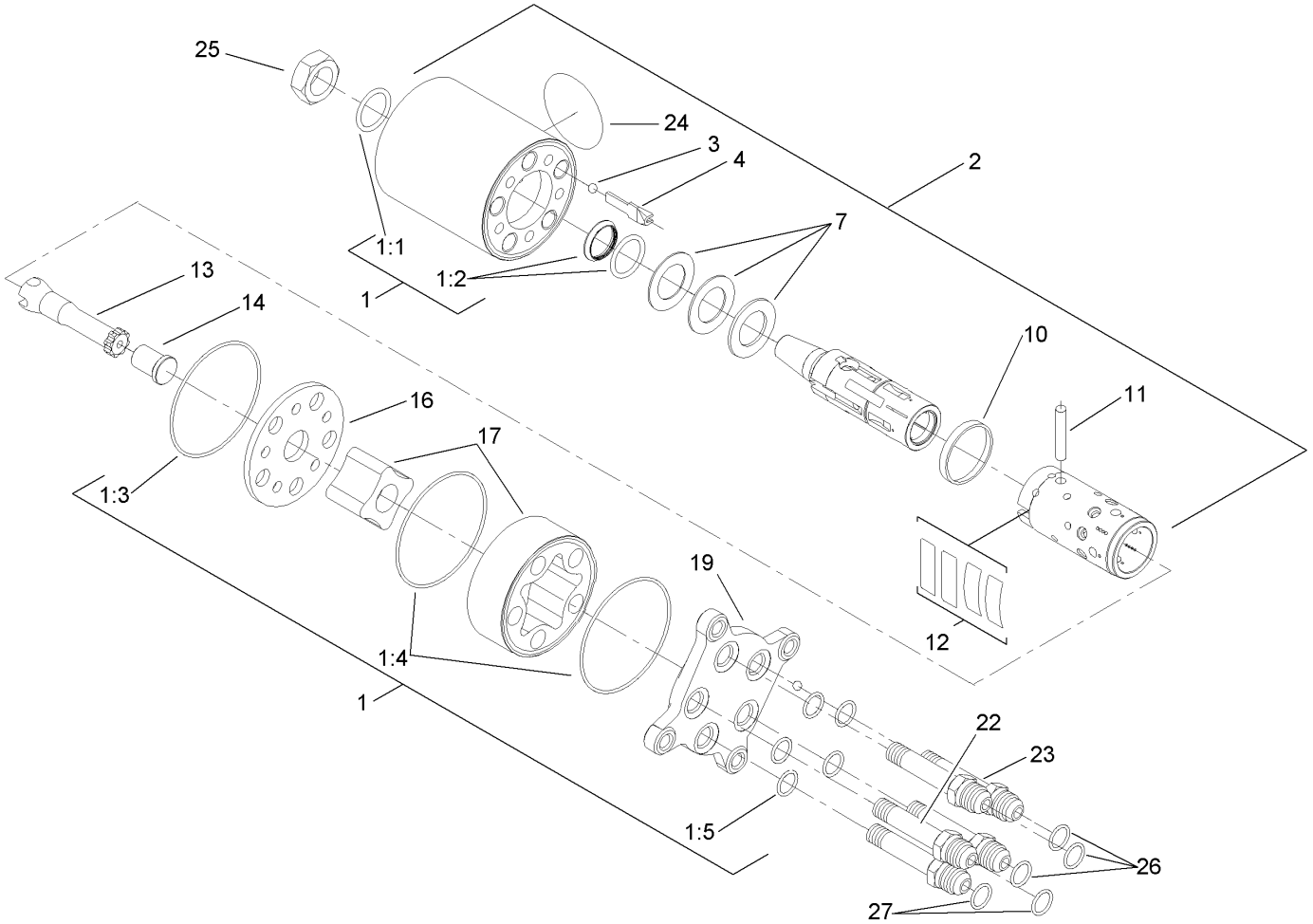

Steering Valve Assembly No. 104-5180

Ref.	Part Number	Qty.	Description
1	106-6716	1	Seal Kit
1:1		1	Ring-Seal, Dust ●
1:2		1	Seal-Shaft ●
1:3		1	O-Ring ●
1:4		2	O-Ring ●
1:5		5	O-Ring ●
2		1	Housing ●
3		1	Ball ●
4		1	Stop-Ball ●
7		1	Bearing ASM ●
10		1	Ring ●
11		1	Pin-Cross ●
12		1	Springs ●
13		1	Shaft ●
14		1	Spacer ●
16		1	Plate-Distributor ●
17		1	Gearwheel Set ●
19		1	Cover-End ●
22		1	Screw-Special ●
23		4	Screw-Special ●
24		1	Plate-Name ●
25	3296-33	1	Nut-Lock, NI
26	237-22	3	O-Ring
27	237-21	2	O-Ring

● Not serviced separately

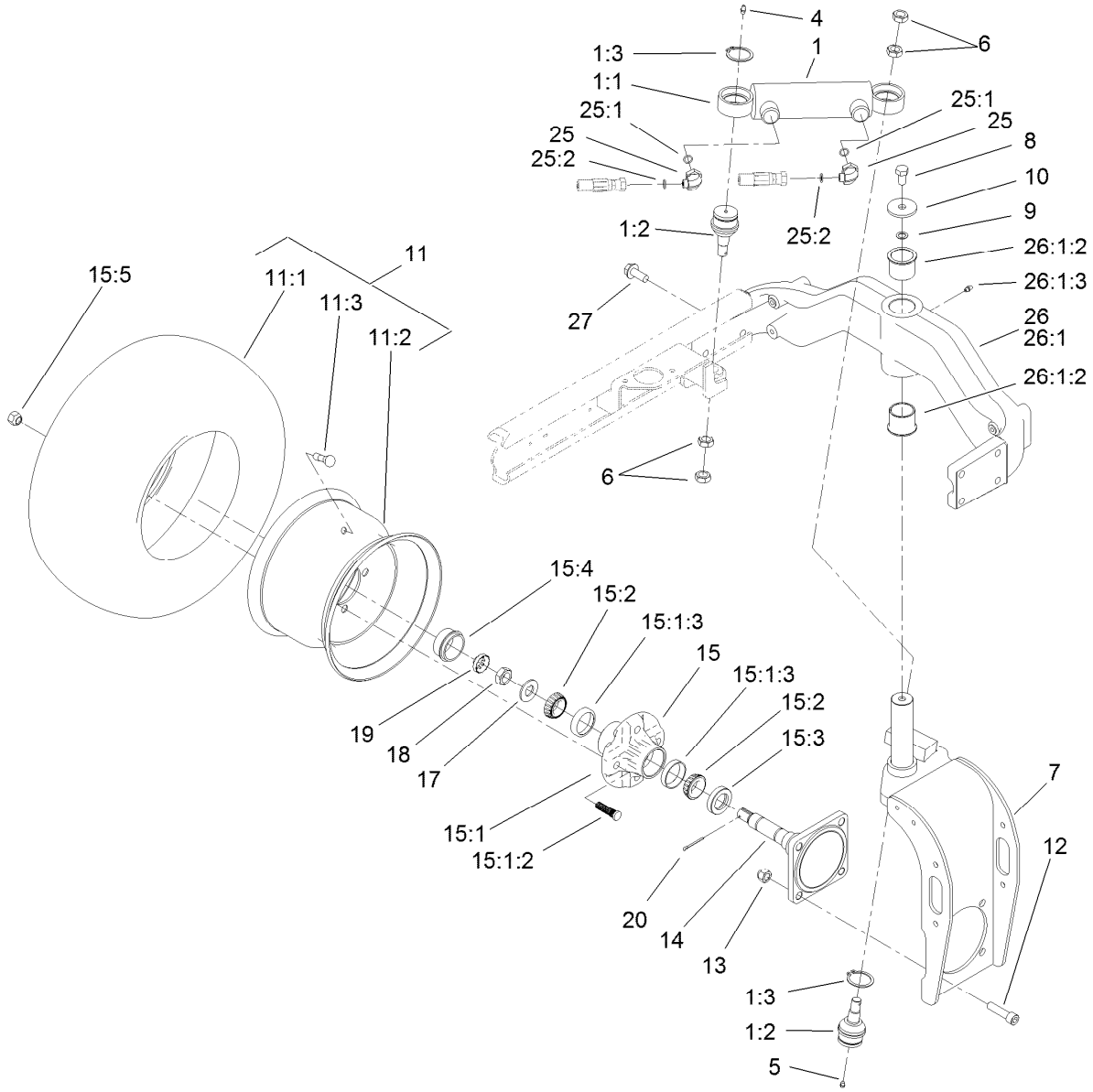

Rear Fork and Tire Assembly

Ref.	Part Number	Qty.	Description
1		1	Steering Cylinder / Balljoint ASM ●
1:1	94-8141	1	HYD Cylinder ASM
1:2	106-6774	2	Joint-Ball
1:3	32151-104	2	Ring-Retaining, External
4	302-5	1	Fitting-Grease
5	302-59	1	Plug-EXT Hex Spl
6	3220-6	4	Nut-Jam
7	95-8905-01	1	Fork-Rear
8	325-3	1	Screw-HH
9	3255-2	1	Washer-Lock, EXT
10	75-7730	1	Washer-Thrust
11		1	Wheel And Tire ASM ●
11:1	117-5129	1	Rim
11:2	115-1572	1	Tire
11:3	232-27	1	Stem-Valve
12	3274-5	4	Screw-HSH
13	3296-23	4	Nut-Lock, NI

Ref.	Part Number	Qty.	Description
14	115-6655-03	1	Spindle
15	117-5115	1	Hub And Bearing ASM
15:1	117-8251	1	Hub ASM
15:1:2	114-3918	4	Stud-Wheel
15:1:3	254-72	2	Bearing-Cup, Tapered
15:2	254-94	2	Bearing-Cone, Tapered
15:3	112-1690	1	Seal-Oil
15:4	241-119	1	Cap-Dust
15:5	242-50	4	Nut-Lug
17	93-0309	1	Washer-Tab
18	3220-7	1	Nut-Jam
19	93-0307	1	Nut-Lock, Retainer
20	3272-13	1	Pin-Cotter
25	340-132	2	Fitting-Elbow, 90 DEG
25:1	237-78	1	O-Ring
25:2	237-21	1	O-Ring
26	107-7828-03	1	Casting-Rear
26:1		1	Rear Casting ASM ●

● Not serviced separately

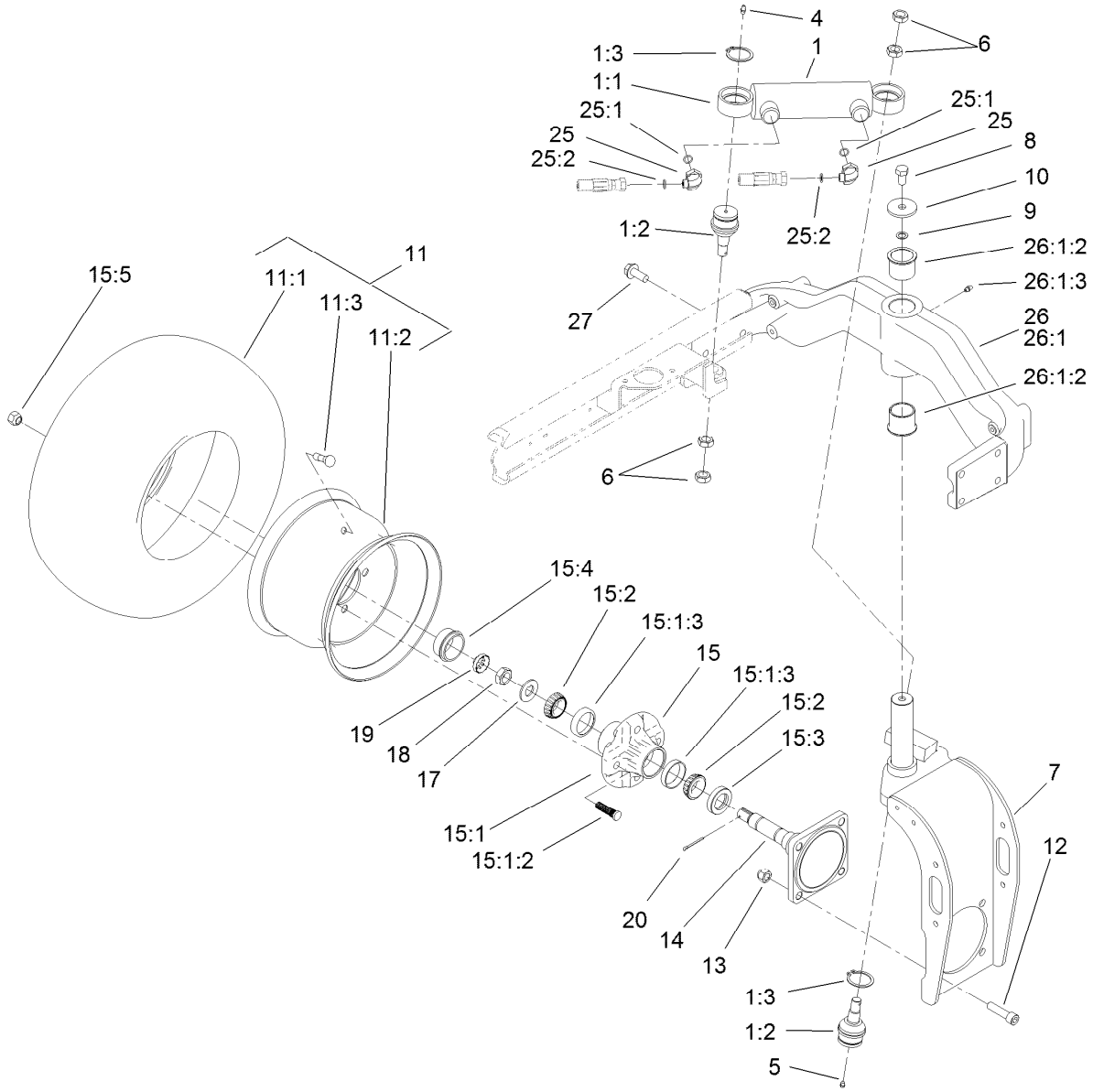

Rear Fork and Tire Assembly (continued)

Ref.	Part Number	Qty.	Description
26:1:2	95-8805	2	Bushing

Ref.	Part Number	Qty.	Description
26:1:3	302-5	1	Fitting-Grease
27	3234-38	8	Screw-HHF

● Not serviced separately

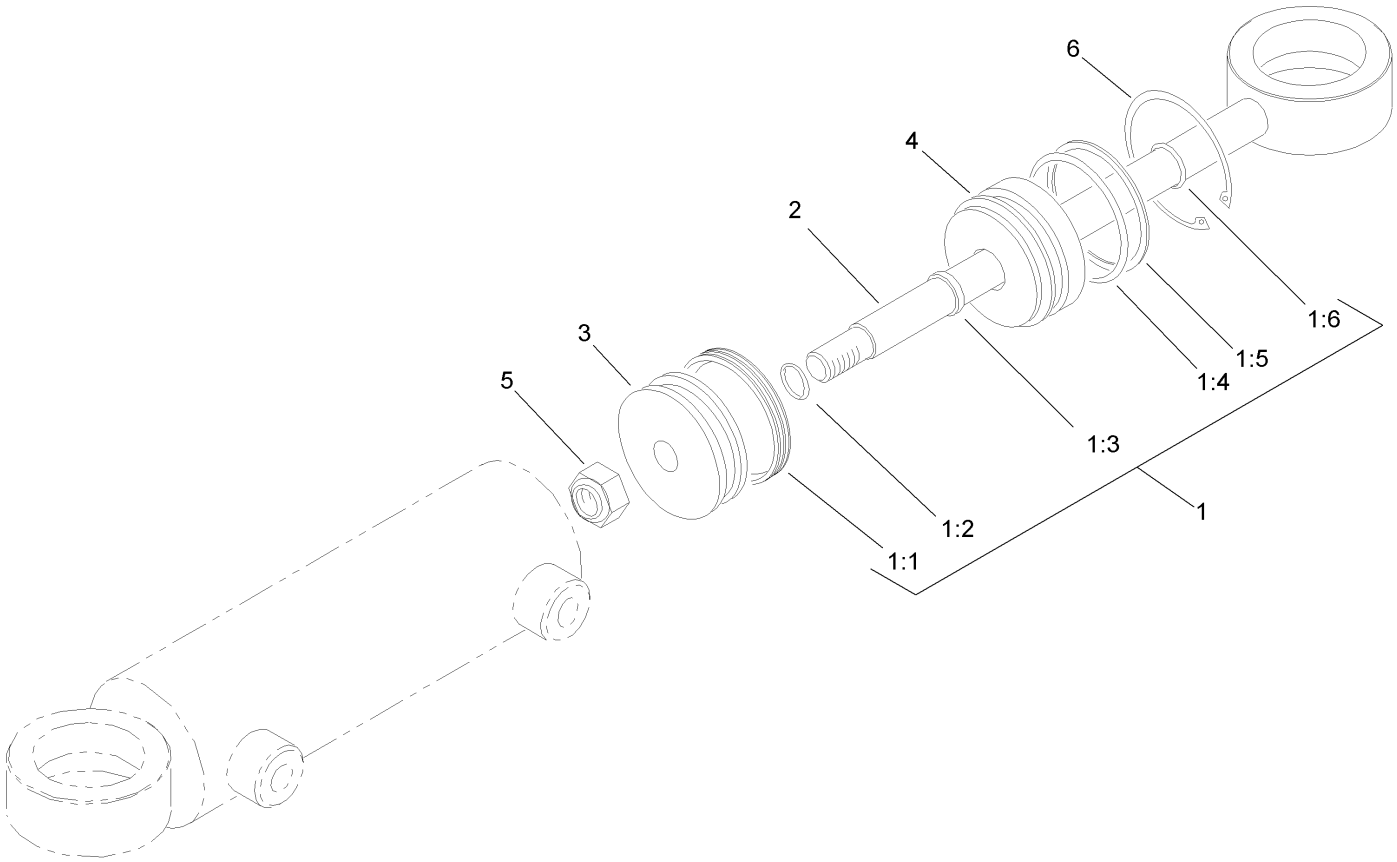

Hydraulic Cylinder Assembly No. 94-8141

Ref.	*Part Number*	*Qty.*	*Description*
1	86-5390	1	Seal Kit
1:1		1	Uniring ●
1:2		1	O-Ring ●
1:3		1	Seal-Rod ●
1:4		1	O-Ring ●
1:5		1	Ring-Backup ●
1:6		1	O-Ring ●
2		1	Rod ●
3		1	Piston ●
4		1	Gland ●
5		1	Nut-Lock ●
6		1	Ring-Retaining ●

● Not serviced separately

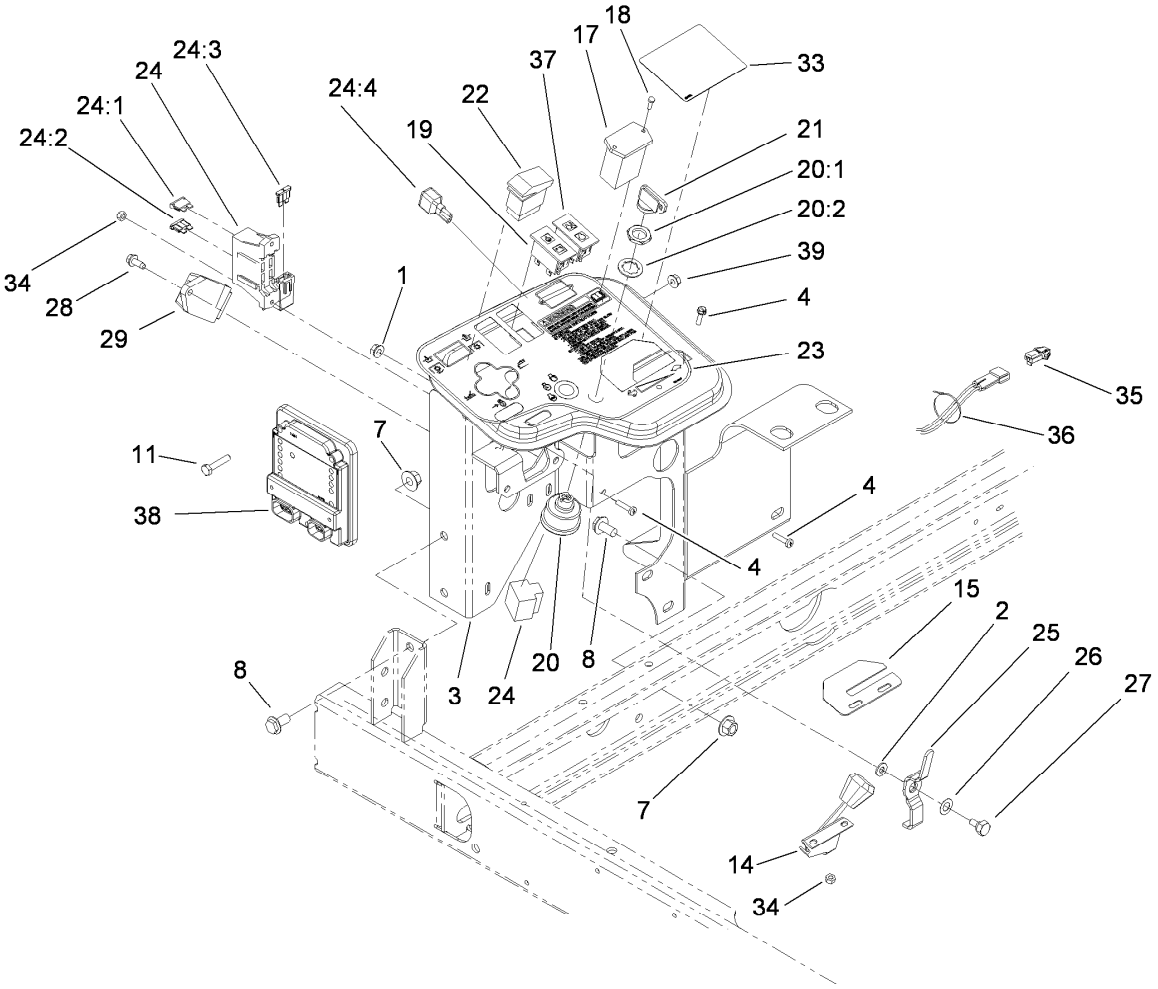

Control Panel Assembly

Ref.	Part Number	Qty.	Description
1	32128-32	1	Nut-HHF
2	3256-22	1	Washer-Flat
3	115-3496-03	1	Panel-Control
4	3290-134	4	Screw
7	32128-43	5	Nut-Flange
8	3234-1	5	Screw-HHF
11	321-8	3	Screw-HH
14	110-8795	1	Cable-Throttle
15	104-0421	1	Plate-Stop, Throttle
17	75-6820	1	Hourmeter
18	32144-18	2	Screw-HWH
19	100-8070	1	Lamp-Warning
20	104-2541	1	Ignition Switch ASM
20:1	218-461	1	Nut-HH
20:2	3254-5	1	Washer-Lock
21	63-8360	2	Key-Ignition
22	95-8999	1	Switch
23	108-9006	1	Decal-Console

Ref.	Part Number	Qty.	Description
24	112-9911	1	Harness-Wire
24:1	218-578	2	Fuse-Blade, 10 Amp
24:2	109355	1	Fuse-Blade, 15 Amp
24:3	94-6710	1	Fuse-2 Amp
24:4	100-4918	1	Diode
25	99-3401-03	1	Lever-Valve, Lock
26	3290-477	1	Washer-Curved
27	63-3410	1	Screw-Shoulder
28	32144-10	1	Screw-HWH
29	98-7611	1	Controller-Glow
33	99-3558	1	Decal-Console, CE
34	3290-148	4	Nut-HF
35	104-4875	1	Harness-Wire, Jumper
36	3290-379	1	Tie-Cable
37	100-8071	1	Lamp-Warning
38	106-9277	1	Module-Control, Standard
39	32128-33	3	Nut-HF

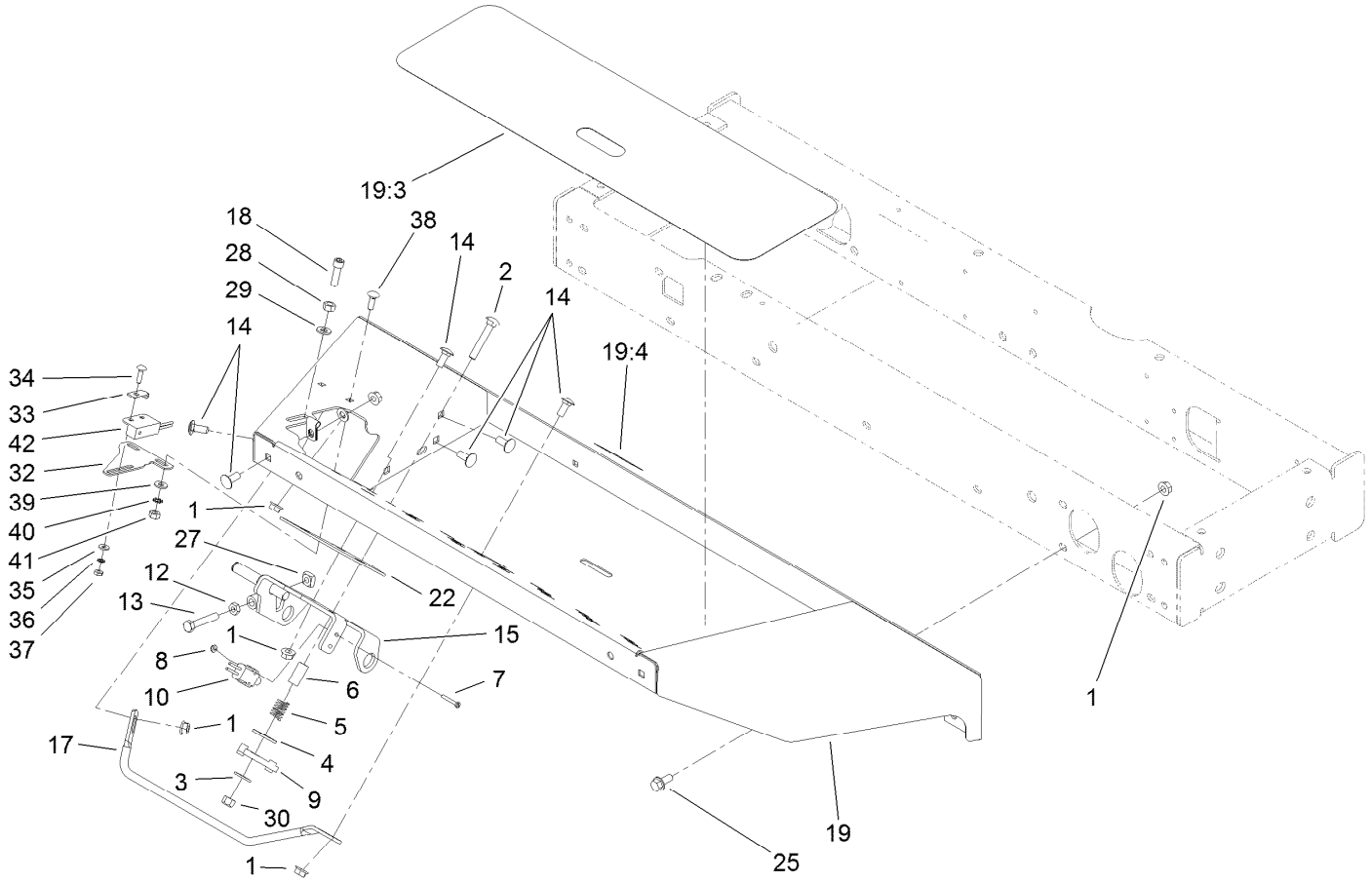

Front Platform Assembly

Ref.	Part Number	Qty.	Description
1	32128-20	17	Nut-HF
2	3230-6	1	Bolt-CARR
3	3256-3	1	Washer-Flat
4	3256-40	1	Washer-Flat
5	65-9940	1	Spring
6	95-8866	1	Tube-Arm, Rocker
7	32105-9	2	Screw
8	3296-9	2	Nut-Hex
9	99-3593	1	Arm-Rocker
10	95-8900	1	Switch
12	3218-2	1	Nut-Hex Jam
13	322-41	1	Bolt-Hex,TAP
14	3230-23	6	Bolt-CARR
15	95-8869-03	1	Bracket-Pedal, Traction
17	95-8893	1	Bar-Deflector
18	3274-22	1	Screw-HSH
19	106-4154	1	Floorplate ASM
19:3	99-3478	1	Tread-Foot

Ref.	Part Number	Qty.	Description
19:4	99-3444	1	Decal-Mow / Transport
22	106-2661-01	1	Plate-Support
25	3234-5	10	Screw-HHF
27	99-3565	1	Nut-Square
28	3217-6	1	Nut-Hex
29	3256-23	1	Washer-Plain
30	3296-29	1	Nut-Lock, NI
32	100-4871	1	Bracket-Switch, Neutral
33	100-4872	1	Plate-Switch, Neutral
34	3229-20	1	Screw-CARR
35	3256-14	1	Washer-Flat
36	3255-17	1	Washer-Lock, EXT
37	3296-2	1	Nut-Lock, NI
38	3229-1	2	Screw-CARR
39	3256-22	2	Washer-Flat
40	3255-7	2	Washer-Lock/EXT
41	3217-5	2	Nut-Hex
42	100-1270	1	Switch-Proximity

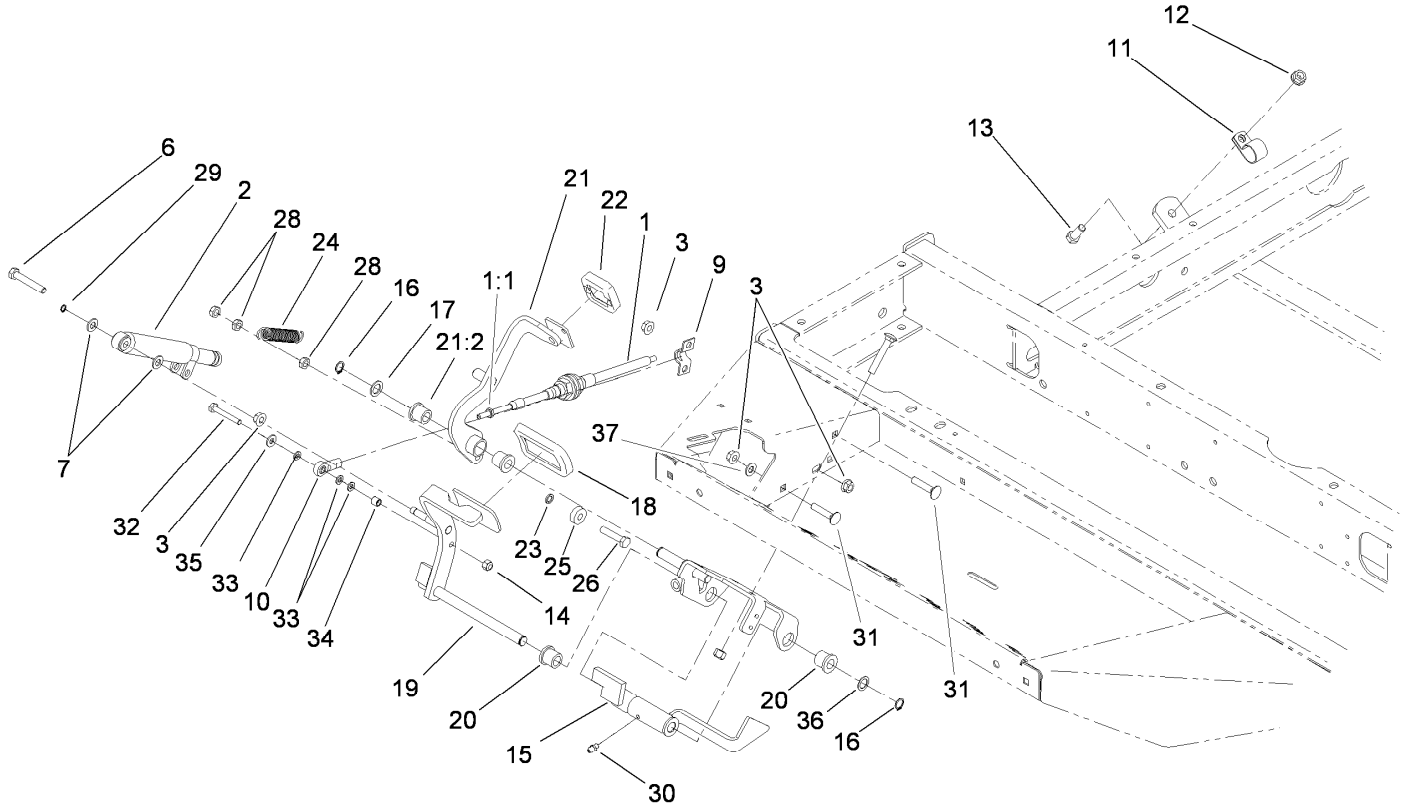

Traction Pedal Assembly

Ref.	Part Number	Qty.	Description
1	100-4815	1	Cable-Control, Traction
1:1	3220-1	2	Nut-Jam
2	76-8870	1	Damper-Lever
3	32128-20	5	Nut-HF
6	322-10	1	Screw-HH
7	3256-23	2	Washer-Plain
9	93-2092	1	Clamp-Cable
10	2411-41	1	Rod End-Ball Joint
11	2412-41	1	Clamp-R
12	3290-357	1	Nut-HHF, Whiz
13	323-6	1	Screw-HH
14	3296-42	1	Nut-Lock, NI
15	95-8861	1	Slide
16	32151-84	2	Ring-Shaft, EXT
17	41-8440	1	Washer
18	74-9100	1	Pad-Pedal, Forward
19	104-4852-03	1	Pedal-Traction
20	256-243	2	Bearing-Flange

Ref.	Part Number	Qty.	Description
21	99-3379	1	Pedal-Reverse ASM
21:2	256-243	2	Bearing-Flange
22	74-9110	1	Pad-Pedal, Reverse
23	75-5470	1	Spacer-Bearing
24	99-3476	1	Spring-Extension
25	251-259	1	Bearing-Ball
26	322-7	1	Screw-HH
28	3296-47	3	Nut-Lock,NI
29	32151-3	1	Ring-Grip
30	302-5	1	Fitting-Grease
31	3230-27	1	Screw-CARR
32	321-10	1	Screw-HH
33	33093-00	3	Washer-Flat
34	99-3545	1	Spacer
35	3256-22	1	Washer-Flat
36	73-0040	4	Washer-Thrust
37	3256-24	1	Washer-Flat

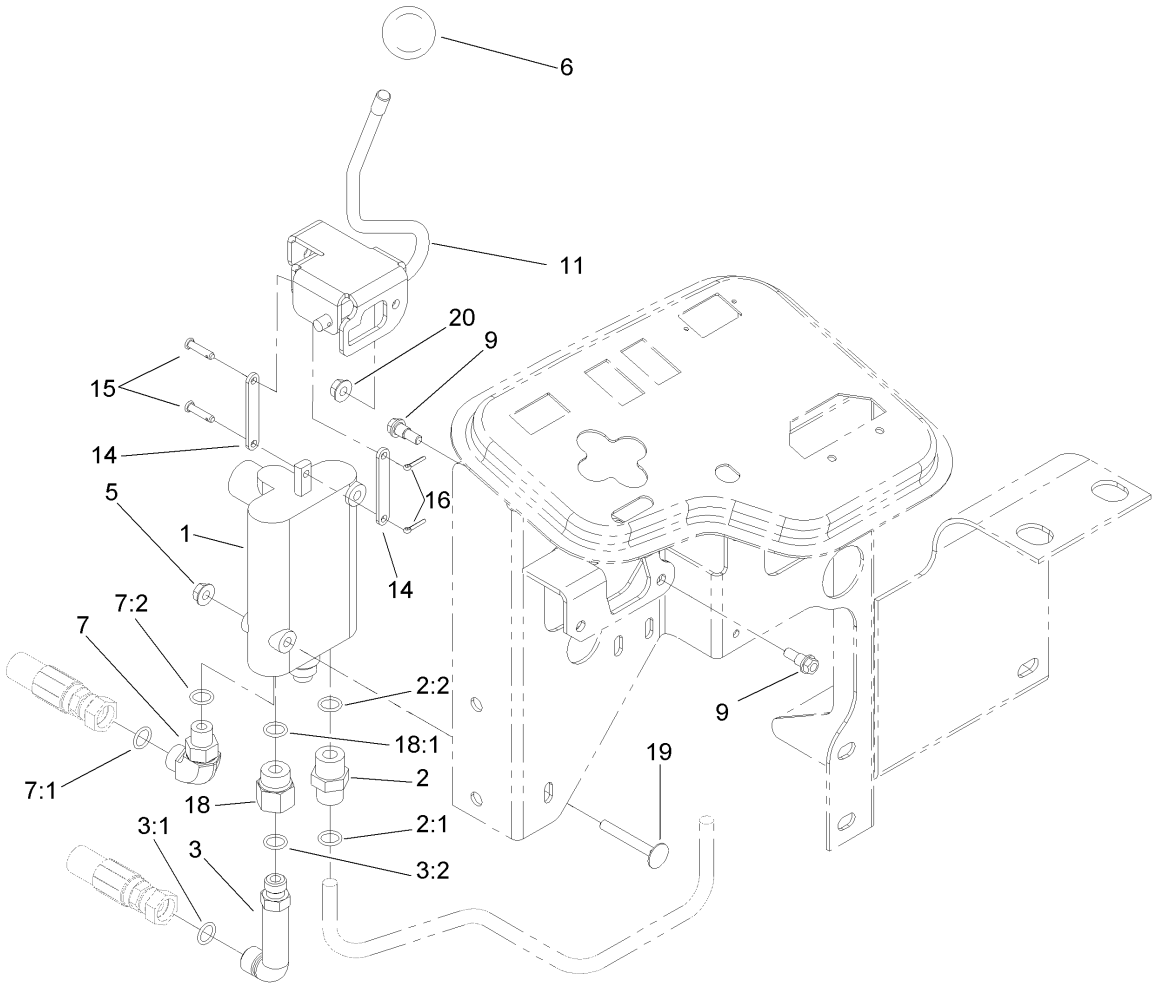

Control Valve Assembly

Ref.	*Part Number*	*Qty.*	*Description*
1	95-8689	1	Single Spool Control Valve ASM
2	340-3	1	Fitting-Straight
2:1	237-22	1	O-Ring
2:2	237-79	1	O-Ring
3	69-4320	1	Fitting-HYD, 90 DEG
3:1	237-22	1	O-Ring
3:2	237-42	1	O-Ring
5	32128-33	2	Nut-HF
6	233-42	1	Knob
7	340-77	1	Fitting-Elbow, 90 DEG
7:1	237-22	1	O-Ring
7:2	237-42	1	O-Ring
9	42-3560	2	Bolt-Shoulder
11	95-8692	1	Lever ASM
14	95-8634	2	Link
15	283-16	2	Pin-Clevis
16	3272-1	2	Pin-Cotter
18	353-397	1	Reducer-Adapter
18:1	237-79	1	O-Ring
19	3230-33	2	Screw-CARR
20	32128-32	2	Nut-HHF

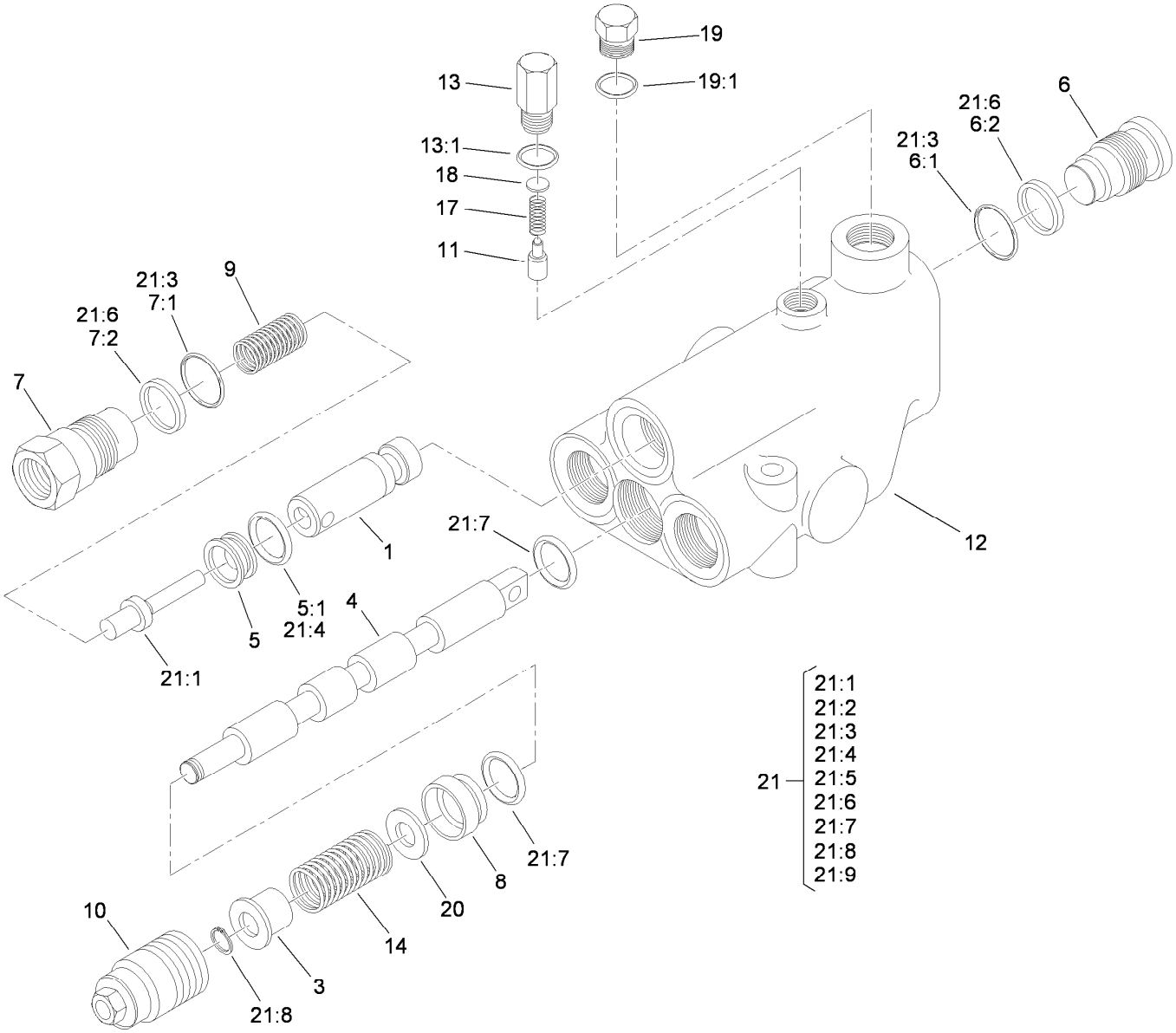

Single Spool Control Valve Assembly No. 95-8689

Ref.	Part Number	Qty.	Description
1	99-3586	1	Plunger
3	58-6310	1	Spacer
4		1	Spool ●
5	58-6330	1	Seat
5:1	58-6340	1	O-Ring
6	58-6350	1	Plug
6:1	60-5720	1	O-Ring
6:2	58-6370	1	Washer
7	69-1800	1	Plug ASM
7:1	60-5720	1	O-Ring
7:2	58-6370	1	Washer
8	58-6400	1	Bushing
9	69-1810	1	Spring
10	58-6420	1	Cap
11	99-3585	1	Detent-Plunger
12		1	Body ●
13	99-3588	1	Plug ASM

Ref.	Part Number	Qty.	Description
13:1	60-6410	1	O-Ring
14	99-3531	1	Spring
17	99-3587	1	Spring
18	60-6450	1	Disc
19	353-989	1	Plug-Hex, Hollow
19:1	237-42	1	O-Ring
20	65-2770	1	Washer
21	99-3589	1	Seal Kit
21:1	58-6290	2	Poppet
21:2	58-6320	1	Wiper
21:3	60-5720	2	O-Ring
21:4	58-6340	2	O-Ring
21:5	93-6314	1	O-Ring
21:6	58-6370	2	Washer
21:7	58-6450	2	O-Ring
21:8	58-6460	1	Ring-Retaining
21:9		1	O-Ring ●

● Not serviced separately

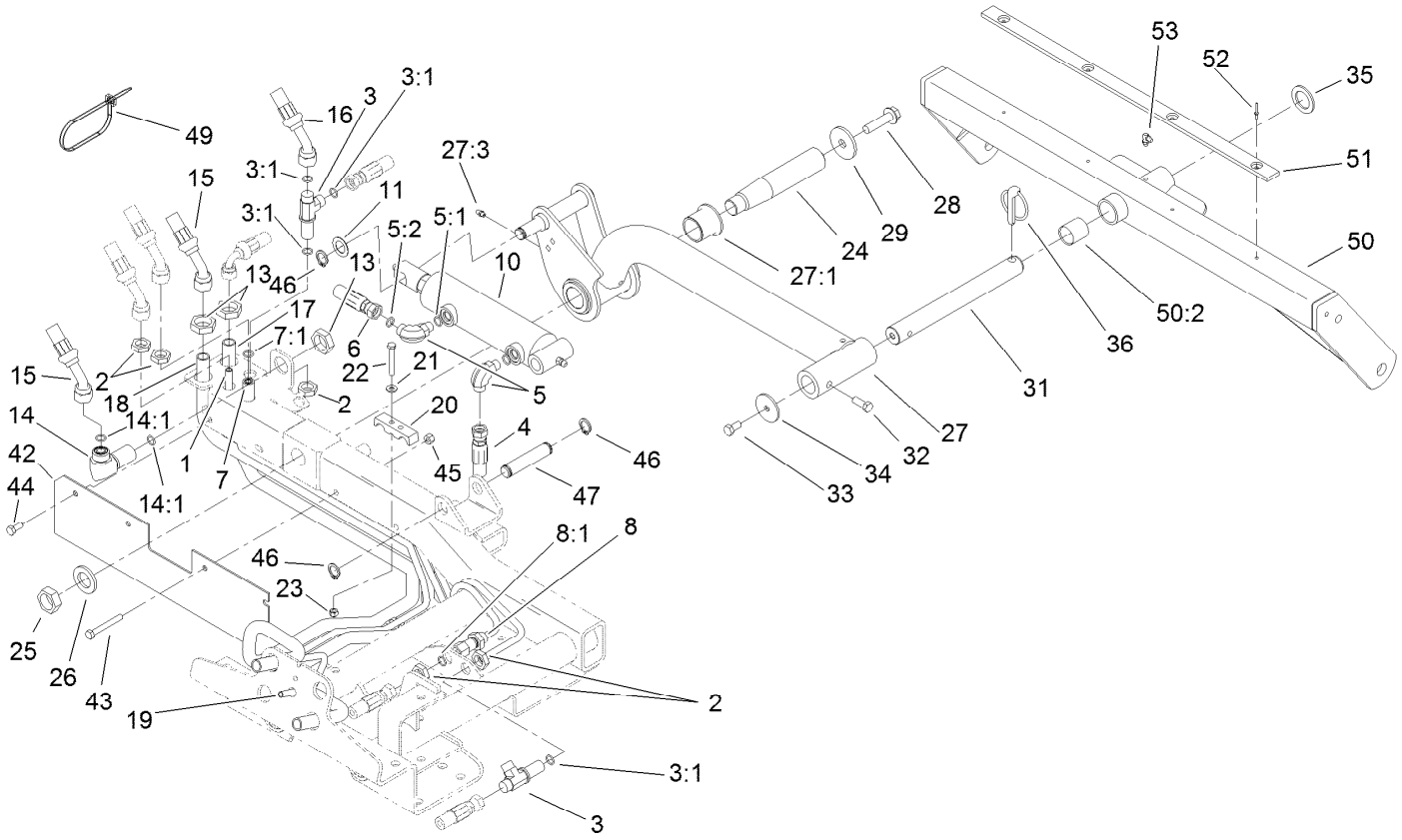

Rear Lift Arm Assembly

Ref.	Part Number	Qty.	Description
1	104-0402	1	Tube-HYD
2	340-70	5	Nut-Lock
3	340-68	2	Fitting-Tee, Bulkhead
3:1	237-22	3	O-Ring
4	104-0407	1	Hose-HYD
5	340-77	2	Fitting-Elbow, 90 DEG
5:1	237-22	1	O-Ring
5:2	237-42	1	O-Ring
6	99-3579	1	Hose-HYD
7	104-0403	1	Tube ASM
7:1	237-22	1	O-Ring
8	340-71	1	Fitting-Straight, Bulkhead
8:1	237-22	2	O-Ring
10	112-9916	1	HYD Cylinder ASM
11	3-6498	1	Washer-Thrust
13	340-74	3	Nut-Lock, Bulkhead
14	340-72	1	Fitting-Bulkhead, 90 DEG
14:1	237-65	2	O-Ring
15	108-9004	2	Hose ASM
16	115-3412	1	Hose-HYD
17	104-0401	1	Tube ASM

Ref.	Part Number	Qty.	Description
18	104-0400	1	Tube ASM
19	104-0404	1	Tube ASM
20	99-3641	2	Clamp-Tube
21	3256-22	4	Washer-Flat
22	321-11	2	Screw-HH
23	3296-42	2	Nut-Lock, NI
24	95-8990	1	Shaft-Pivot, Rear
25	3220-9	1	Nut-Jam
26	86-1480	1	Washer
27	115-3473	1	Rear Liftarm ASM
27:1	69-6470	2	Bushing-Caster
27:3	302-5	1	Fitting-Grease
28	3234-27	1	Screw-HHF
29	75-7730	1	Washer-Thrust
31	100-4944	1	Shaft-Pivot, Cutting Unit
32	323-6	1	Screw-HH
33	323-4	1	Screw-HH
34	63-7400	1	Washer-Rebound
35	3-6781	1	Washer-Thrust
36	283-71	1	Pin-Lynch
42	104-0453-03	1	Guard

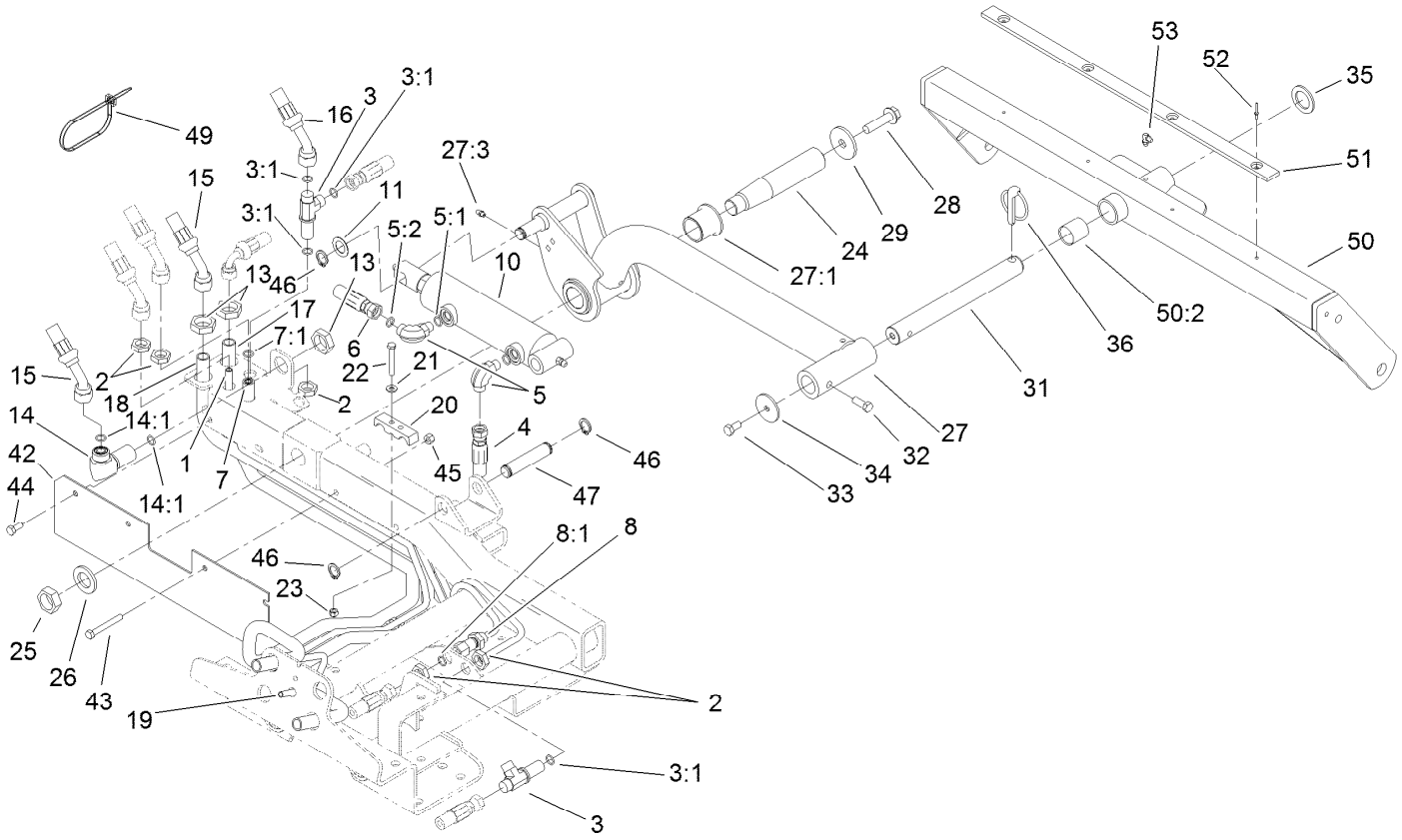

Rear Lift Arm Assembly (continued)

Ref.	Part Number	Qty.	Description
43	322-12	2	Screw-HH
44	322-3	2	Screw-HH
45	32128-20	4	Nut-HF
46	32120-93	3	Ring-Retaining
47	95-8575	1	Pin-Clevis
49	3334-945	2	Tie-Cable

Ref.	Part Number	Qty.	Description
50	104-4229	1	Rear Carrier Frame ASM
50:2	108-4000	2	Bushing
51	95-8936	1	Strip-Wear
52	3269-18	4	Rivet-Blind
53	302-60	1	Fitting-Grease

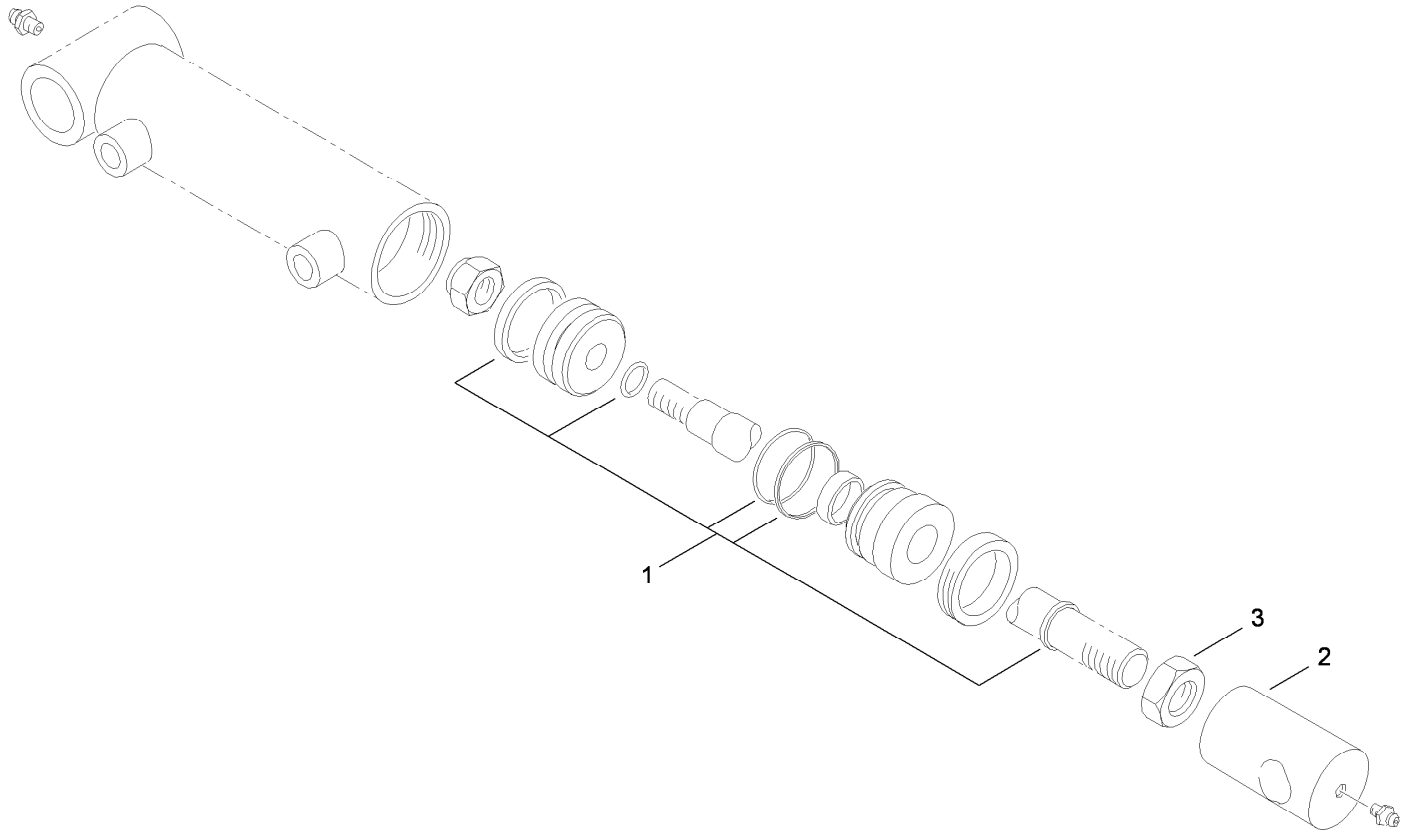

Hydraulic Cylinder Assembly No. 112-9916

Ref.	*Part Number*	*Qty.*	*Description*
1	115-3410	1	Seal Kit
2	108-9035	1	Clevis
3	3220-7	1	Nut-Jam

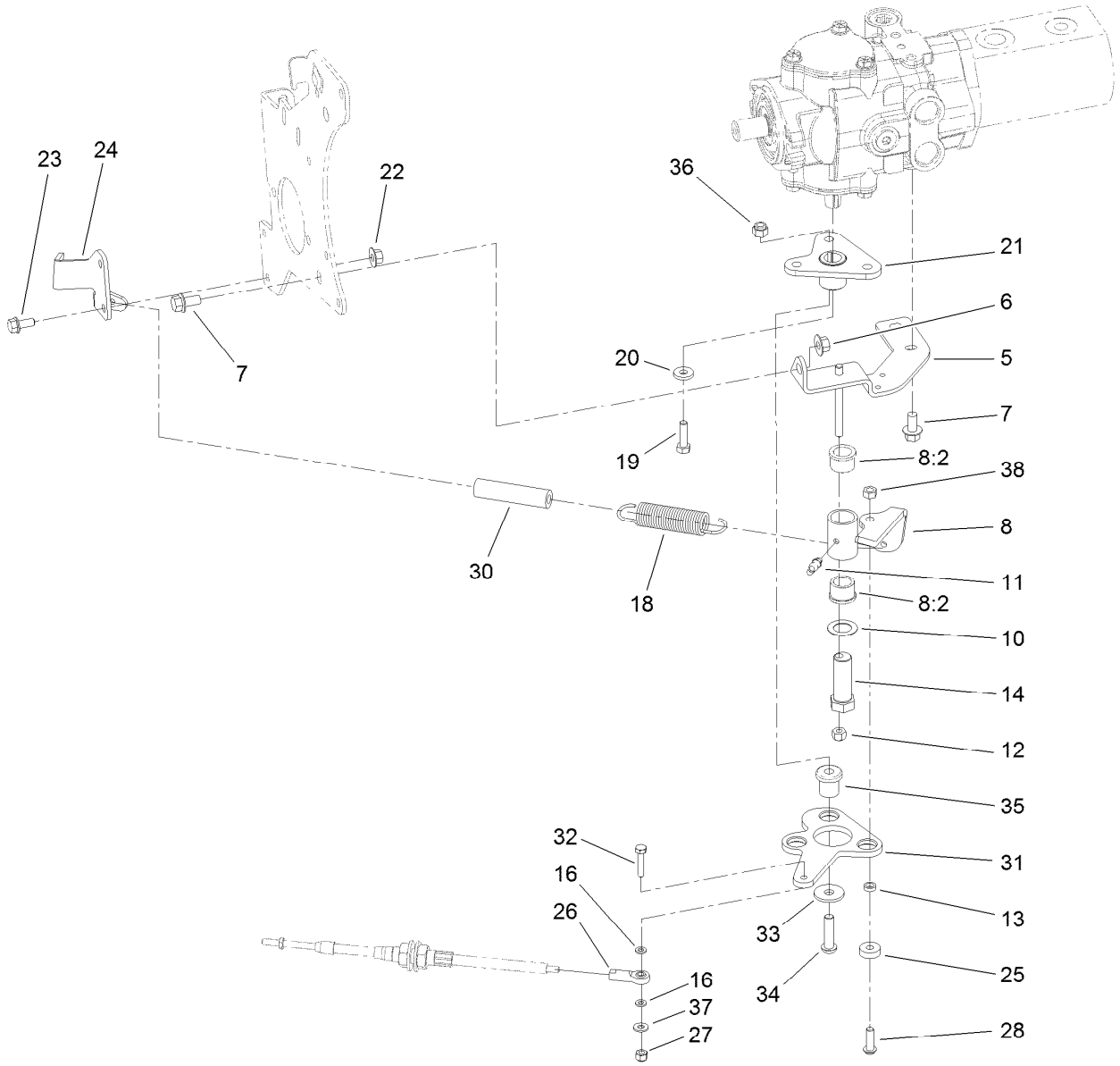

Neutral Arm Assembly

Ref.	Part Number	Qty.	Description
5	95-8960-03	1	Bracket-Neutral
6	32128-43	1	Nut-Flange
7	3234-1	3	Screw-HHF
8	104-0422	1	Neutral Arm ASM
8:2	256-113	2	Bushing-Flange
10	3-6498	1	Washer-Thrust
11	302-60	1	Fitting-Grease
12	3296-29	1	Nut-Lock, NI
13	100-4817	1	Spacer
14	76-8640	1	Stud-Traction
16	33093-00	2	Washer-Flat
18	94-1369	1	Spring-Extension
19	3210-6	1	Screw-HH
20	88-7200	1	Washer-Flat
21	99-3598-03	1	Hub
22	32128-44	2	Nut

Ref.	Part Number	Qty.	Description
23	3234-5	2	Screw-HHF
24	104-0464-03	1	Bracket-Support, Cable
25	251-259	1	Bearing-Ball
26	2411-41	1	Rod End-Ball Joint
27	3296-42	1	Nut-Lock, NI
28	3274-104	1	Screw-HSBH
30	99-3556	1	Hose
31	99-3594-03	1	Lever-Pump
32	321-8	1	Screw-HH
33	2844	3	Washer
34	95-3857	3	Screw-HSBH
35	63-9750	3	Mount
36	3296-39	3	Nut-Lock, NI
37	3256-22	1	Washer-Flat
38	32153-3	1	Nut-Hex, Side Deform

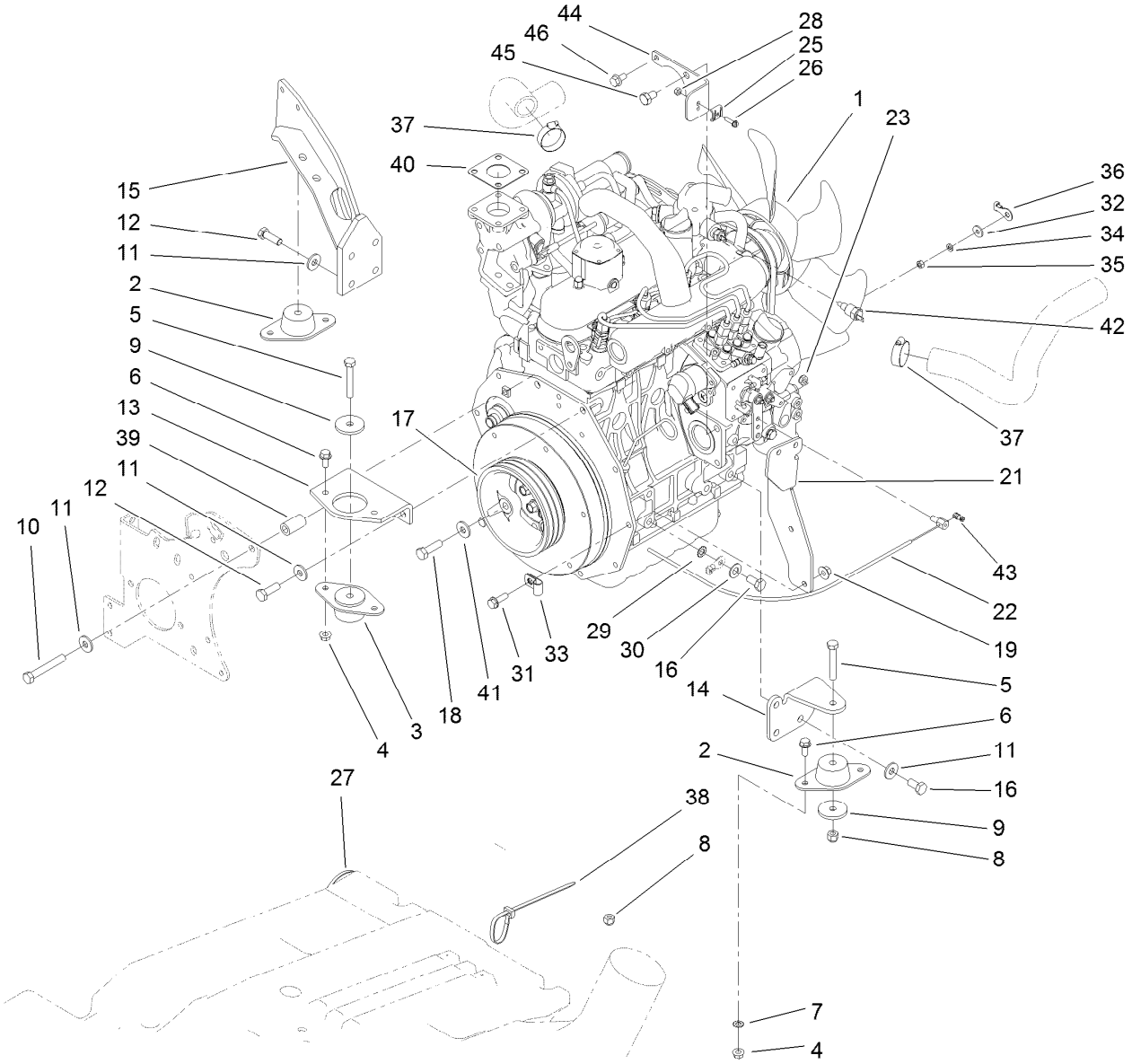

Engine Assembly

Ref.	Part Number	Qty.	Description
1	119-2025	1	Engine ASM
2	83-1030	2	Mount-Engine
3	93-5265	1	Mount-Engine
4	32128-20	6	Nut-HF
5	323-11	3	Screw-HH
6	3234-5	6	Screw-HHF
7	3255-8	1	Washer-Lock
8	3296-39	3	Nut-Lock, NI
9	80-8560	3	Washer-Hardened
10	42-9370	1	Screw-HH
11	80-6990	9	Washer-Hardened
12	95-8812	5	Screw-HH
13	99-3618-03	1	Mount-Engine, Front
14	95-8937-03	1	Mount-Engine, LH
15	100-4838-03	1	Mount-Engine
16	63-7790	4	Screw-Cap
17	99-3626	1	Pulley-3V
18	56-2140	3	Screw-HH
19	32128-44	2	Nut
21	115-3487-03	1	Bracket-Mount, Fuel Filter
22	98-9311	1	Swivel-Throttle

Ref.	Part Number	Qty.	Description
23	3296-20	1	Nut-Lock, NI
25	81-1690	1	Clamp-Cable
26	32105-13	1	Screw-HWH
27	3290-379	2	Tie-Cable
28	3296-2	1	Nut-Lock, NI
29	3255-9	1	Washer-Lock
30	3256-25	1	Washer-Flat
31	3234-17	2	Screw-HHF
32	3256-78	1	Washer-Flat
33	2412-10	1	Clamp-R
34	43-5930	1	Washer-Lock, Spring
35	48-7890	1	Nut-Hex
36	99-3441	1	Harness-Wire, Fusible Link
37	2412-34	2	Clamp-Hose
38	3290-378	14	Tie-Cable
39	95-8736	1	Spacer
40	98-9611	1	Gasket
41	3256-24	3	Washer-Flat
42	106-7772	1	Thermoswitch
43	112-9919	1	Stop-Cable, Throttle
44	110-9009-03	1	Bracket-Cable, Throttle

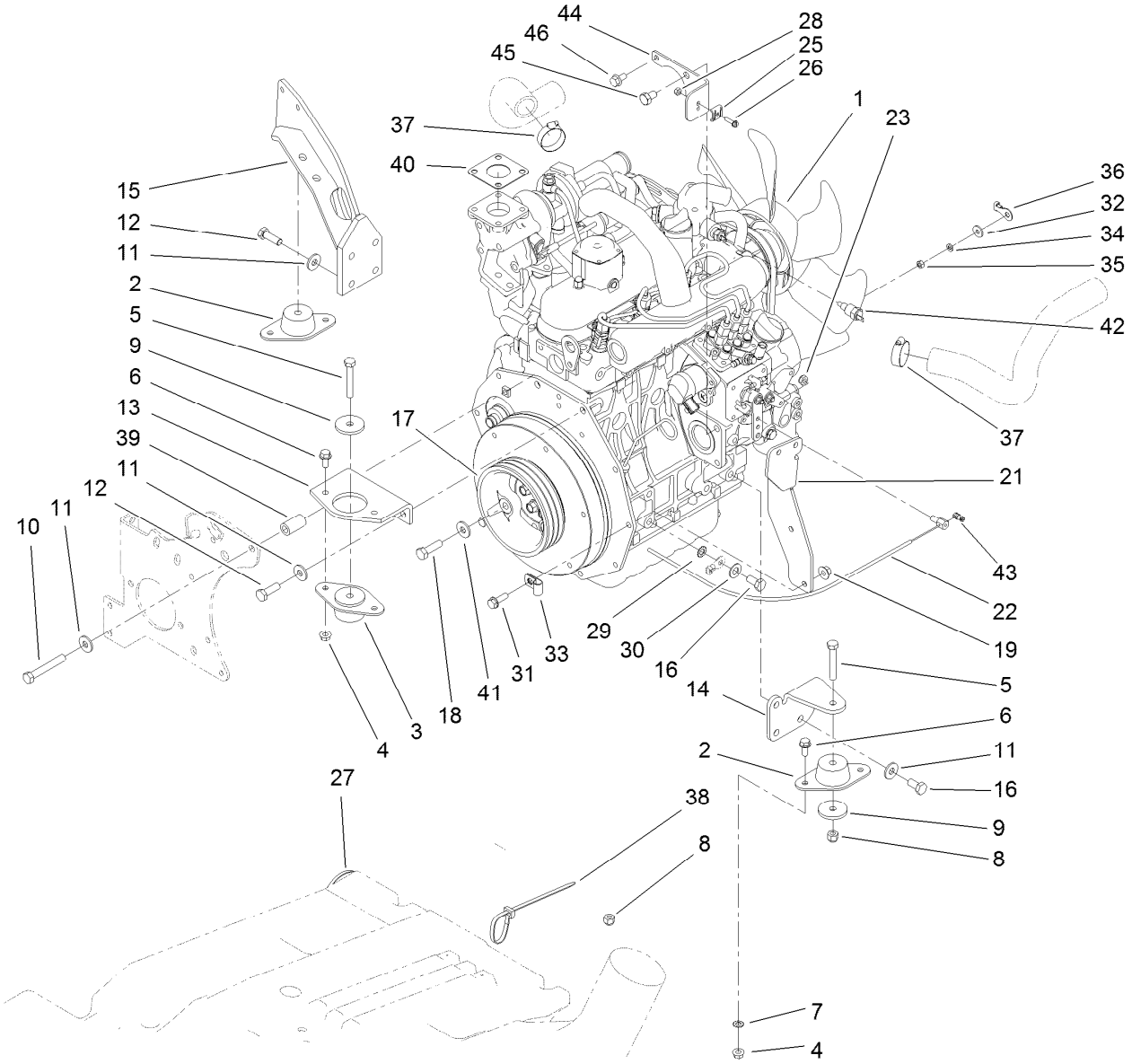

Engine Assembly (continued)

Ref.	*Part Number*	*Qty.*	*Description*
45	70-8470	1	Screw-HH
46	33104-016	1	Screw-HHF

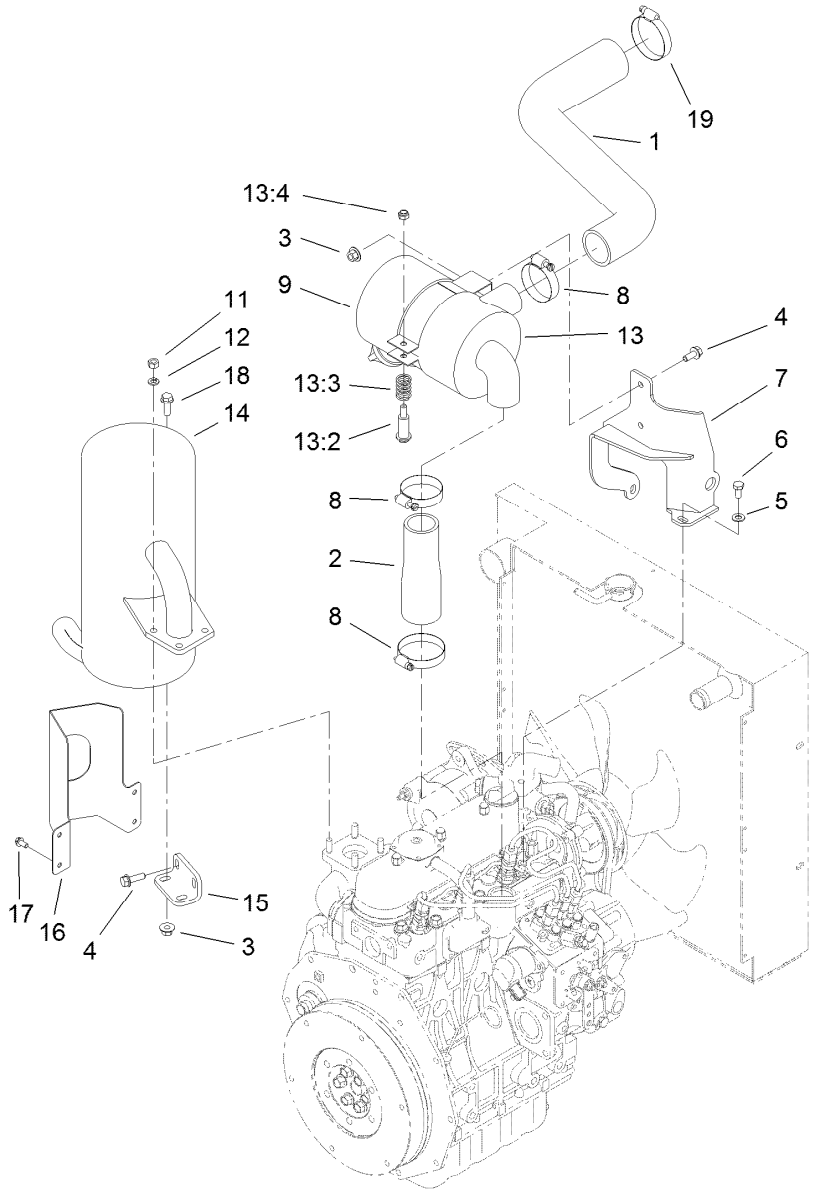

Air Cleaner and Muffler Assembly

Ref.	Part Number	Qty.	Description
1	120-3354	1	Hose-Air Inlet, Upper
2	95-8947	1	Hose-Air Inlet, Lower
3	32128-44	6	Nut
4	3234-5	3	Screw-HHF
5	3256-23	2	Washer-Plain
6	33114-016	2	Screw-HH
7	99-3355-03	1	Bracket-Filter, Air
8	2412-92	3	Clamp-Hose
9	93-2190	1	Air Cleaner ASM
11	33014-00	4	Nut-Hex
12	3253-4	4	Washer-Lock

Ref.	Part Number	Qty.	Description
13	93-2191	1	Air Cleaner Mounting Band ASM
13:2	94-3653	1	Bolt
13:3	94-3654	1	Spring
13:4	48-9510	1	Nut
14	104-4834	1	Muffler
15	95-8943-03	1	Bracket-Muffler
16	99-3425-03	1	Guard-Exhaust
17	32144-4	4	Screw-HWH
18	3234-17	3	Screw-HHF
19	2412-130	1	Clamp-Hose

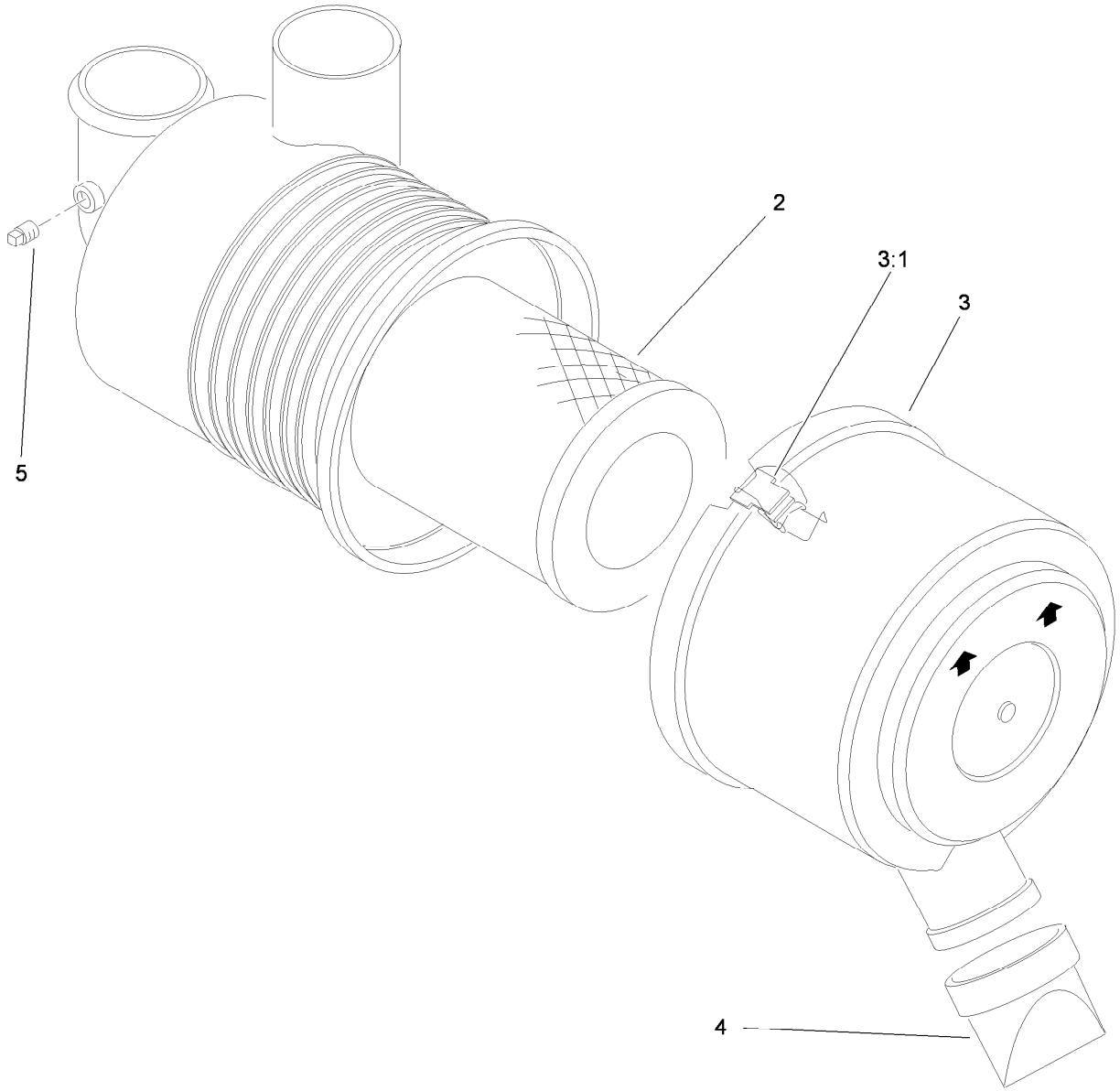

Air Cleaner Assembly No. 93-2190

Ref.	*Part Number*	*Qty.*	*Description*
2	108-3811	1	Filter-Air
3	94-3652	1	Cover ASM
3:1	1-643283	2	Latch-Cleaner, Air
4	87-9400	1	Valve-Vacuator
5	285-17	1	Plug-Pipe

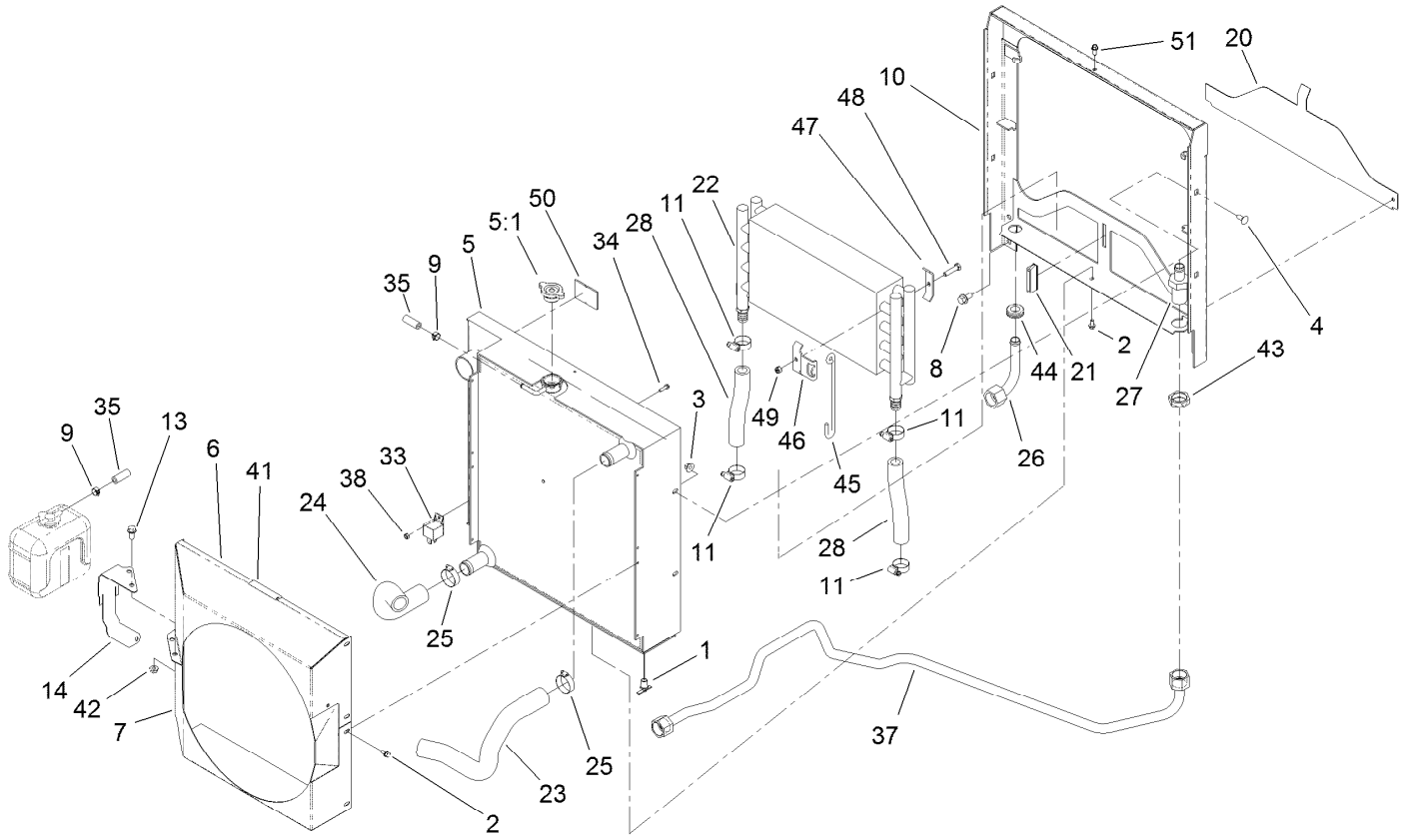

Radiator Assembly

Ref.	Part Number	Qty.	Description
1	304-46	1	Draincock
2	32104-116	10	Screw-HWHTF
3	32128-44	4	Nut
4	3230-1	4	Bolt-CARR
5	117-5135	1	Radiator
5:1	117-5138	1	Cap-Radiator
6	100-4885-03	1	Shroud-Fan, Top
7	119-2008-03	1	Shroud-Fan, Lower
8	3234-1	4	Screw-HHF
9	92-2379	2	Clamp-Hose
10	104-4855-03	1	Frame-Radiator
11	2412-129	4	Clamp-Hose
13	3234-5	2	Screw-HHF
14	100-4899-03	1	Bracket-Reservoir
20	95-8702-03	1	Shield-Radiator, Lower
21	99-3497	1	Magnet
22	100-4869	1	Cooler-Oil
23	104-0454	1	Hose-Radiator, Upper
24	120-3353	1	Hose-Radiator, Lower
25	2412-34	2	Clamp-Hose

Ref.	Part Number	Qty.	Description
26	99-3644	1	Tube-Head, Filter
27	100-4925	1	Fitting-Bulkhead
28	99-3646	2	Hose-Cooler, Oil
33	99-7435	1	Relay
34	32105-13	1	Screw-HWH
35	109-0274	1	Hose-Fuel
37	115-3489	1	Tube ASM
38	3296-2	1	Nut-Lock, NI
41	93-6681	1	Decal-Warning, Fan
42	32128-20	2	Nut-HF
43	340-126	1	Nut-Bulkhead
44	100-4866	1	Grommet
45	100-4858	2	Form-Wire
46	100-4859	2	Bracket-Cooler, Keeper
47	100-4860	2	Bracket-Clamp
48	322-17	2	Screw-HH
49	3296-47	2	Nut-Lock,NI
50	104-9459	2	Seal-Foam
51	119-2038	1	Screw-HWH

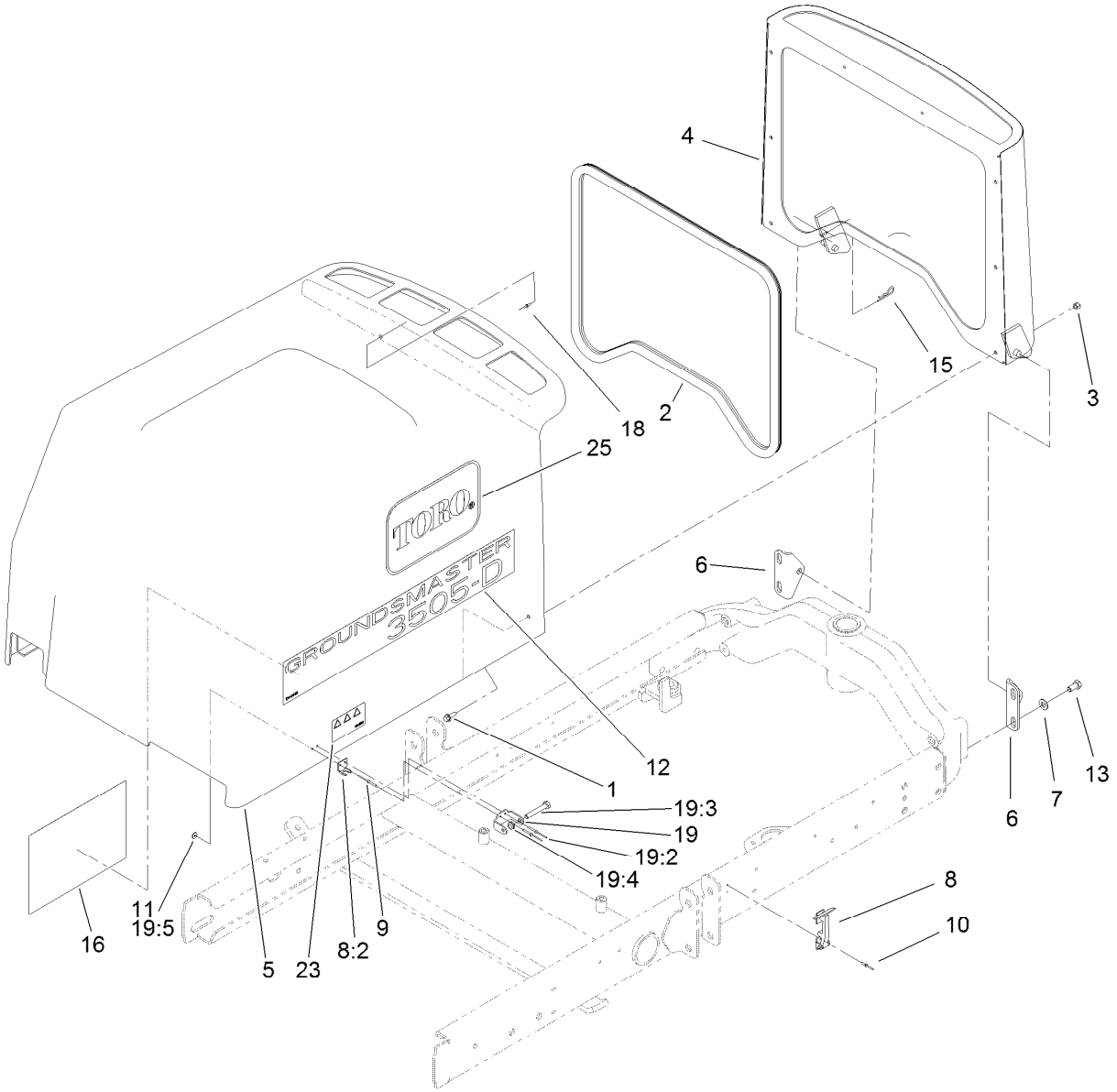

Hood Assembly

Ref.	Part Number	Qty.	Description
1	3234-4	6	Screw-HHF
2	100-4932	1	Trim-Seal
3	3296-42	6	Nut-Lock, NI
4	104-4853-03	1	Screen-Hood
5	100-4855	1	Hood
5:1	106-8115	1	Heat Tape Repair Kit ●
6	95-8728	2	Bracket-Pivot, Hood
7	3256-24	8	Washer-Flat
8	59-9740	2	Flex Draw Latch ASM
8:2	249-40	1	Keeper
9	107-0333	4	Rivet-Pop
10	3290-55	4	Rivet-Pop
11	3269-10	4	Washer-Back

Ref.	Part Number	Qty.	Description
12	108-9007	2	Decal-Hood
13	323-6	4	Screw-HH
15	3290-467	1	Pin-Hair
16	117-5103	1	Decal-Service
18	3269-21	2	Rivet-Pop
19	119-2004	1	CE Latch Kit
19:2	107-0333	2	Rivet-Pop
19:3	322-10	1	Screw-HH
19:4	3296-47	1	Nut-Lock,NI
19:5	3269-10	2	Washer-Back
23	106-6754	1	Decal-Danger
25	66-6140	2	Decal

● Not illustrated

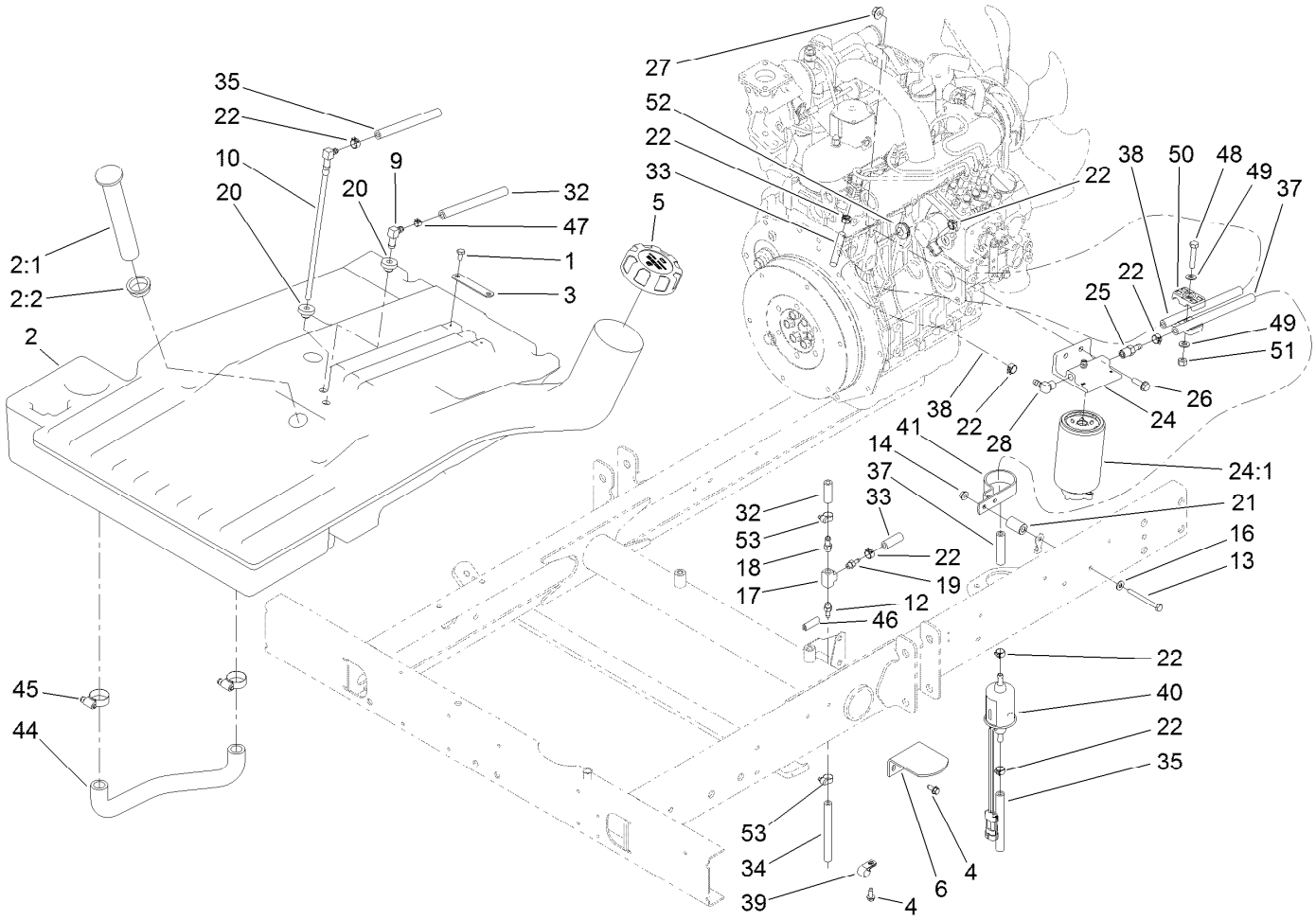

Fuel System Assembly

Ref.	Part Number	Qty.	Description
1	321-2	2	Screw-HH
2	105-7865	1	Tank-Fuel
2:1	95-8971	1	Gauge-Fuel
2:2	95-8972	1	Grommet
3	95-8881	1	Strap-Line, Fuel
4	32144-10	3	Screw-HWH
5	114-5064	1	Cap-Diesel
6	95-8968-03	1	Support-Tank, Fuel
9	46-6550	1	Fitting-Elbow, 90 DEG
10	110-9689	1	Pipe-Stand
12	304-73	1	Fitting-Straight
13	321-14	1	Screw-HH
14	32128-33	1	Nut-HF
16	3256-22	1	Washer-Flat
17	354-20	1	Fitting-Tee
18	354-21	1	Fitting-Barbed
19	354-22	1	Fitting-Barbed
20	46-6560	2	Bushing
21	77-3180	1	Spacer
22	92-2379	7	Clamp-Hose
24	110-9044	1	Separator-Filter

Ref.	Part Number	Qty.	Description
24:1	110-9049	1	Filter-Spin On, Fuel/Water
25	353-783	1	Fitting-STR
26	3234-17	2	Screw-HHF
27	32128-44	2	Nut
28	353-781	1	Fitting-HYD, 90
32	110-6187	1	Hose-Fuel
33	110-8751	1	Hose-Fuel
34	110-5701	1	Hose-Fuel
35	110-4100	1	Hose-Fuel
37	110-4109	1	Hose-Fuel
38	110-4113	1	Hose-Fuel
39	2412-73	1	Clamp-R
40	110-8806	1	Pump-Fuel
41	110-8817	1	Bracket-Pump, Fuel
44	105-4094	1	Hose-Formed
45	2412-129	2	Clamp-Hose
46	110-8754	1	Trim
47	2412-80	2	Clamp-Hose
48	322-8	1	Screw-HH
49	3256-23	2	Washer-Plain
50	56-7971	2	Clamp-Tube

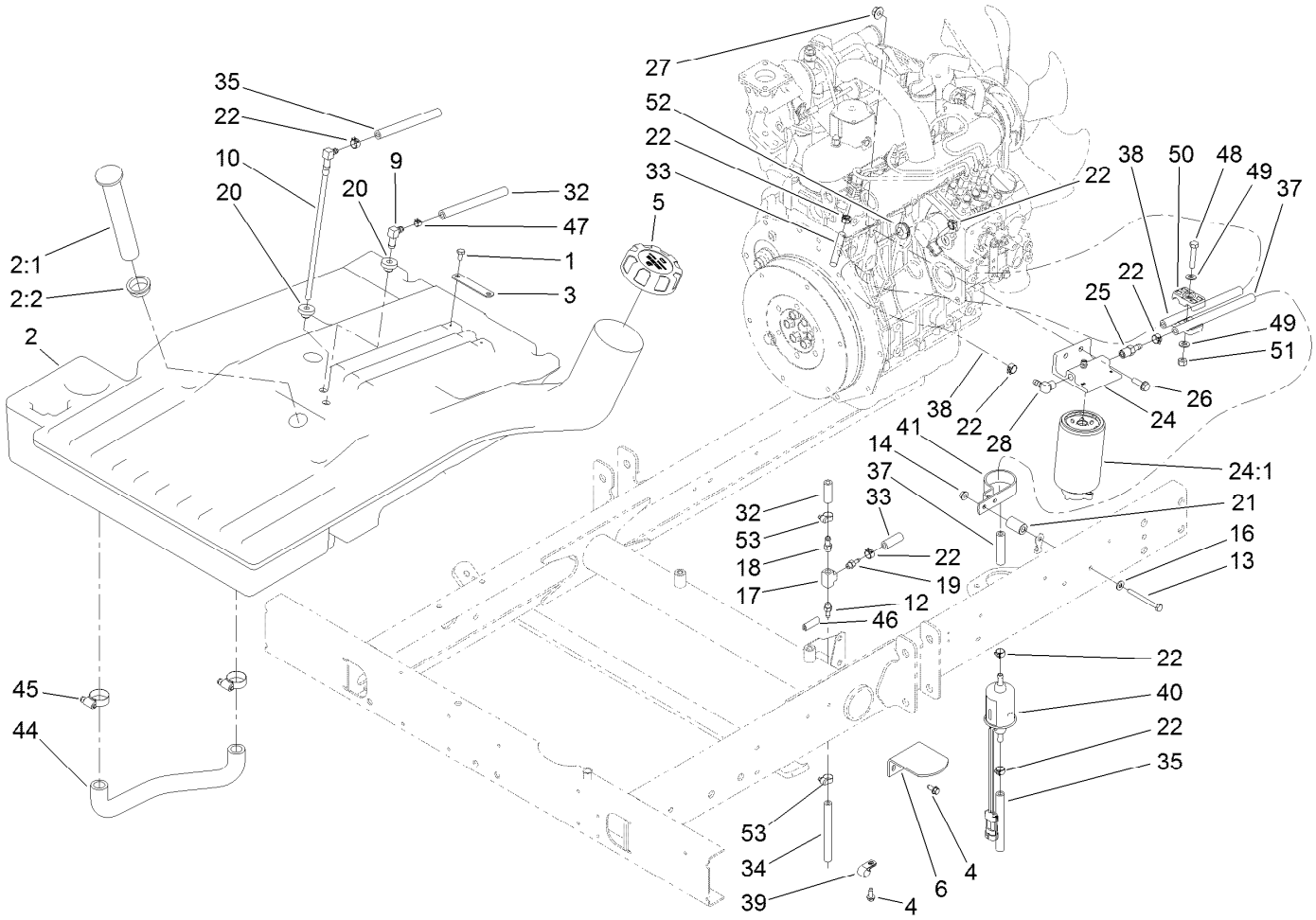

Fuel System Assembly (continued)

Ref.	Part Number	Qty.	Description
51	3296-29	1	Nut-Lock, NI

Ref.	Part Number	Qty.	Description
52	1-543296	1	Grommet
53	2412-108	2	Clamp-Worm

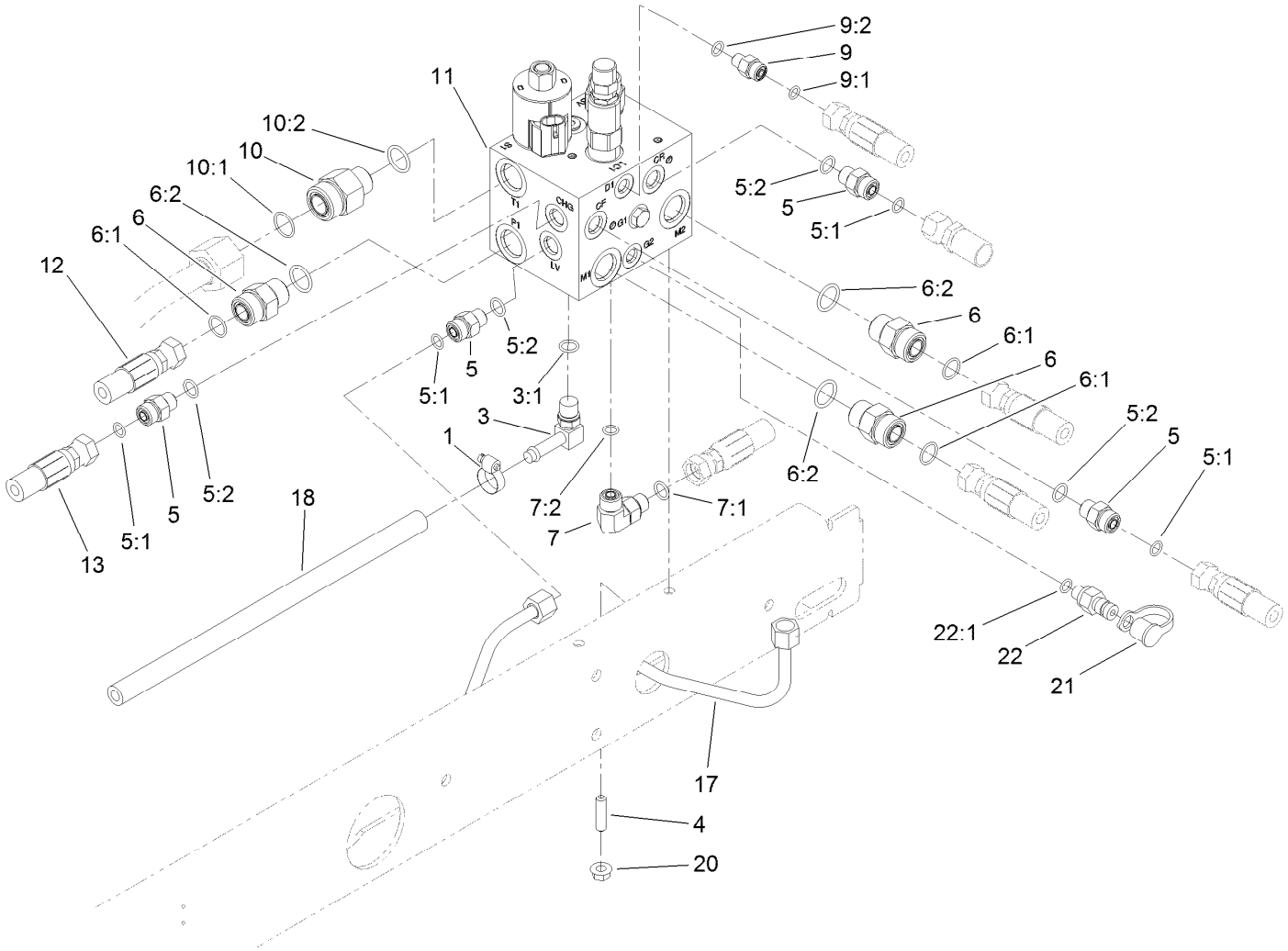

Manifold Block Installation Assembly

Ref.	Part Number	Qty.	Description
1	2412-36	1	Clamp-Hose
3	100-4887	1	Fitting-Elbow, 90
3:1	237-42	1	O-Ring
4	104-0430	2	Stud
5	340-2	4	Fitting-Straight
5:1	237-22	1	O-Ring
5:2	237-42	1	O-Ring
6	340-7	3	Fitting-Straight
6:1	237-65	1	O-Ring
6:2	237-80	1	O-Ring
7	340-77	1	Fitting-Elbow, 90 DEG
7:1	237-22	1	O-Ring
7:2	237-42	1	O-Ring
9	340-92	1	Fitting-Straight

Ref.	Part Number	Qty.	Description
9:1	237-78	1	O-Ring
9:2	237-21	1	O-Ring
10	340-66	1	Fitting-Straight
10:1	237-80	1	O-Ring
10:2	237-58	1	O-Ring
11	115-3486	1	Manifold Block ASM
12	104-0488	1	Hose-HYD
13	92-7595	1	Hose-HYD
17	108-9005	1	Tube ASM
18	80-7342	1	Hose-HYD
20	32128-20	2	Nut-HF
21	354-79	1	Cap-Dust
22	354-77	1	Fitting-Quick
22:1	237-78	1	O-Ring

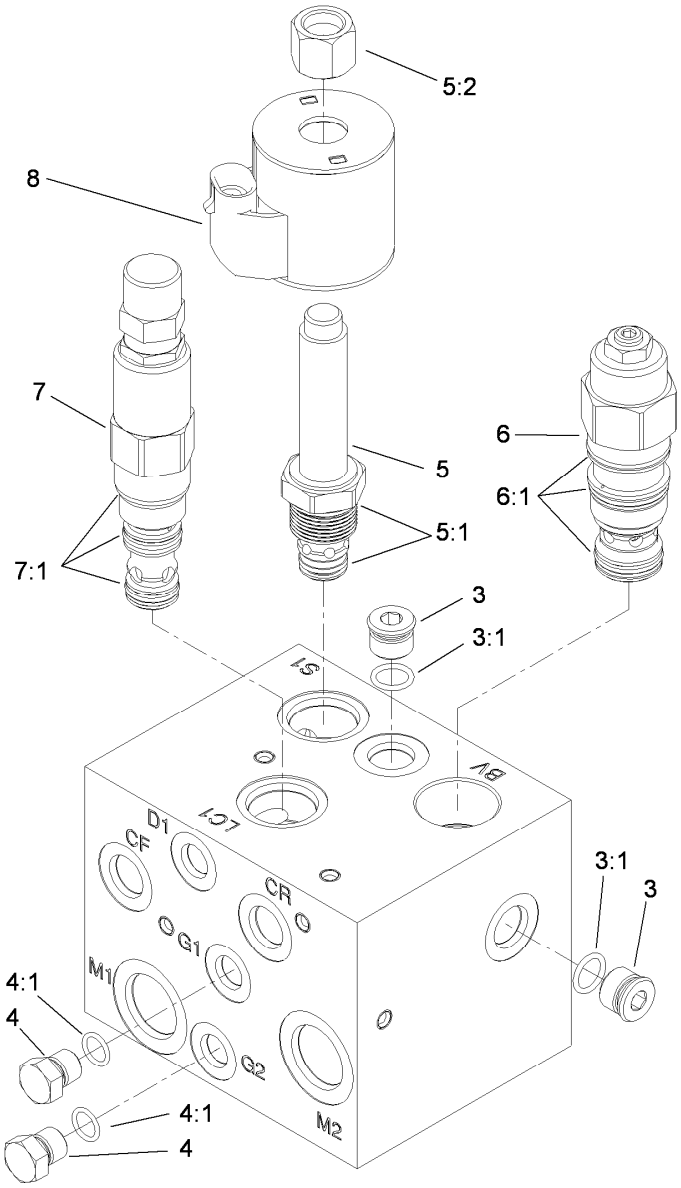

Manifold Block Assembly No. 115-3486

Ref.	*Part Number*	*Qty.*	*Description*
3	106-1026	2	Plug-HYD
3:1	237-42	1	O-Ring
4	117-0115	1	Plug
4:1	237-78	1	O-Ring
5	110-8768	1	Valve-Relief, Solenoid (3000 PSI)
5:1	110-6316	1	Seal Kit ●
5:2	130-8180	1	Nut-Coil
6	117-5110	1	Valve-Counterbalance
6:1	117-5111	1	Seal Kit
7	119-2011	1	Valve-Logic, Adjustable
7:1	119-2159	1	Seal Kit
8	110-6344	1	Coil-12V, DC

● Not illustrated

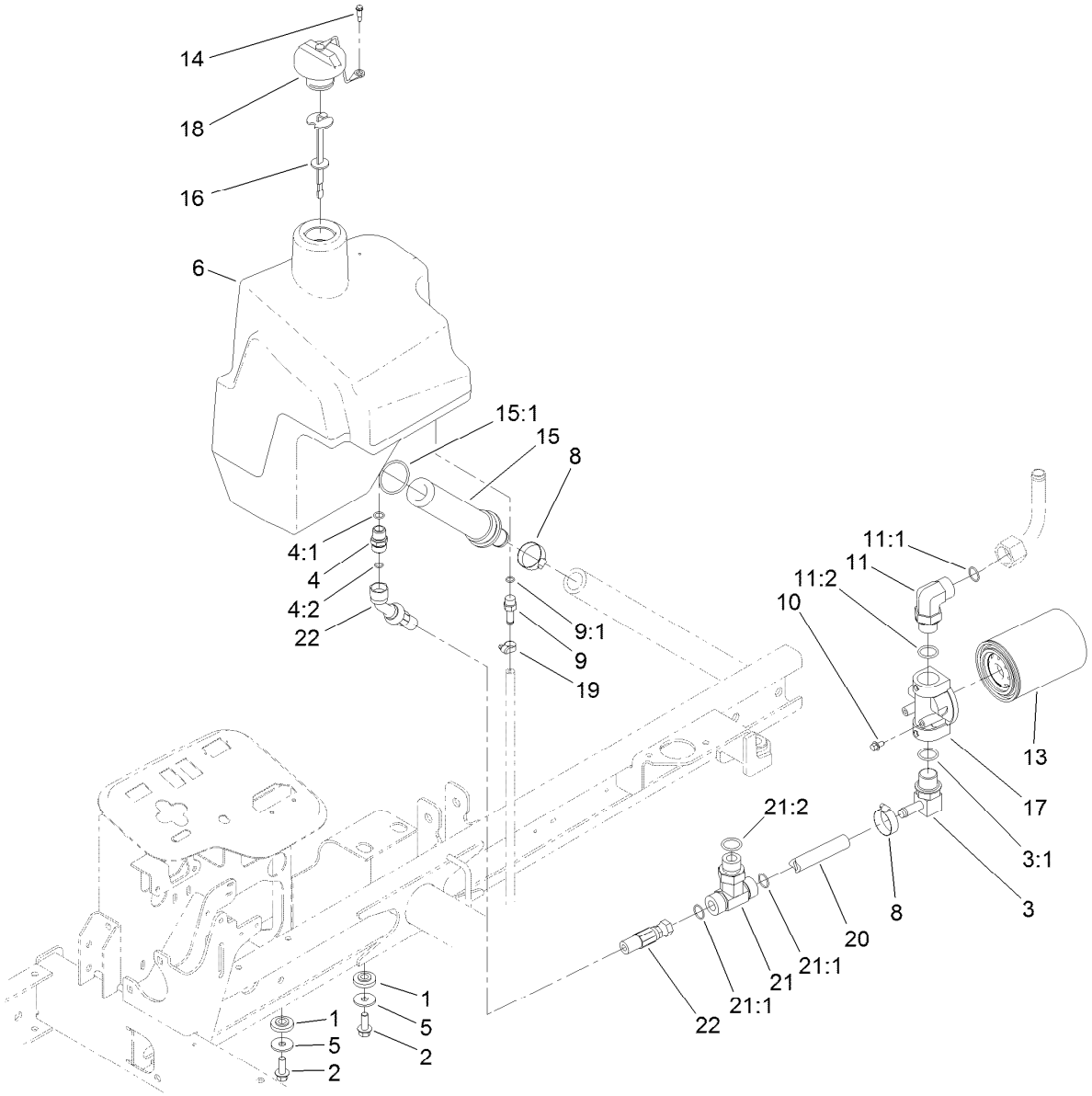

Hydraulic Tank Assembly

Ref.	Part Number	Qty.	Description
1	240-11	4	Bushing-Flange
2	3234-11	4	Screw-HHF
3	353-987	1	Fitting-Elbow, 90
3:1	237-81	1	O-Ring
4	100-4890	1	Fitting-Check
4:1	237-79	1	O-Ring
4:2	237-30	1	O-Ring
5	63-8410	4	Washer
6	104-4840	1	Tank-HYD
8	2412-34	2	Clamp-Hose
9	353-979	1	Fitting-STR
9:1	237-42	1	O-Ring
10	3234-13	2	Screw-HHF
11	340-142	1	Fitting-Elbow, 90 DEG
11:1	237-58	1	O-Ring

Ref.	Part Number	Qty.	Description
11:2	237-81	1	O-Ring
13	86-3010	1	Filter-Oil
14	57-5420	1	Screw-Shoulder
15	104-7546	1	Tank Strainer ASM
15:1	340-136	1	O-Ring
16	119-6968	1	Dipstick-Oil
17	92-5821	1	Head-Filter
18	93-7160	1	Cap-Oil, HYD
19	2412-36	1	Clamp-Hose
20	104-0486	1	Hose-HYD
21	104-4836	1	Fitting-Tee
21:1	237-58	2	O-Ring
21:2	237-81	1	O-Ring
22	104-0487	1	Hose-HYD

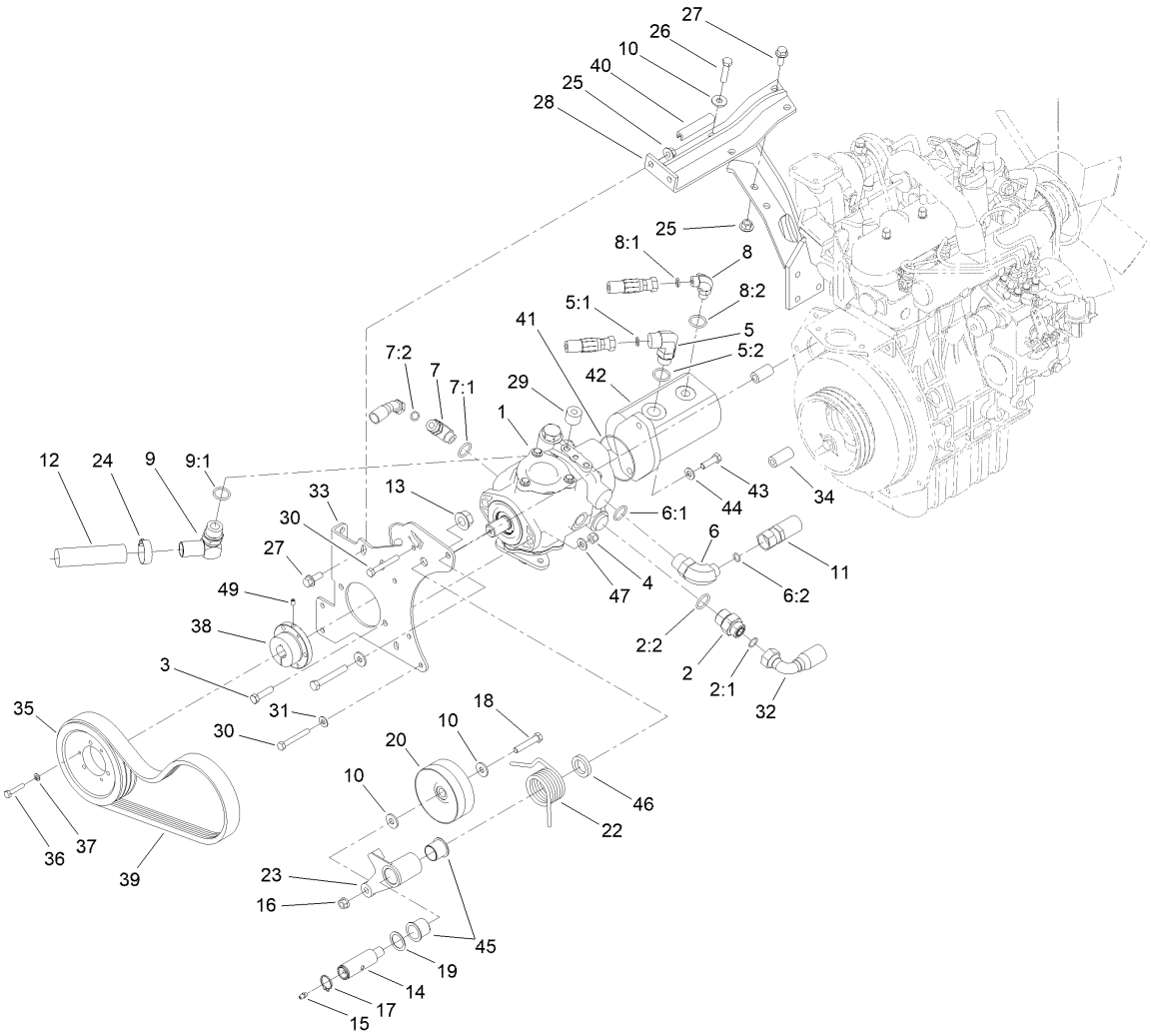

Hydrostat Assembly

Ref.	Part Number	Qty.	Description
1	104-4890	1	Piston Pump ASM
2	340-8	1	Fitting-Straight
2:1	237-65	1	O-Ring
2:2	237-81	1	O-Ring
3	323-8	2	Screw-HH
4	3296-39	2	Nut-Lock, NI
5	340-17	1	Fitting-Elbow, 90 DEG
5:1	237-65	1	O-Ring
5:2	237-80	1	O-Ring
6	340-139	1	Fitting-Elbow 90
6:1	237-81	1	O-Ring
6:2	237-65	1	O-Ring
7	340-18	1	Fitting-HYD, 90 DEG
7:1	237-79	1	O-Ring
7:2	237-22	1	O-Ring
8	340-77	1	Fitting-Elbow, 90 DEG
8:1	237-22	1	O-Ring
8:2	237-42	1	O-Ring
9	95-3502	1	Fitting-Elbow 90
9:1	237-81	1	O-Ring
10	80-6990	3	Washer-Hardened

Ref.	Part Number	Qty.	Description
11	108-9008	1	Hose ASM
12	104-5486	1	Hose
13	32128-54	1	Nut-HF
14	99-3624	1	Shaft-Pivot, Idler
15	302-5	1	Fitting-Grease
16	32128-21	1	Nut-HF Lock
17	32151-36	1	Ring-Retaining
18	323-10	1	Screw-HH
19	74-1810	1	Washer
20	107-7834	1	Pulley-Idler
22	115-3488	1	Spring-Torsion
23	99-3623-03	1	Arm-Idler
24	2412-34	1	Clamp-Hose
25	32128-43	4	Nut-Flange
26	323-19	2	Screw-HH
27	3234-11	4	Screw-HHF
28	99-3436-03	1	Support-Pump
29	99-3440	2	Spacer
30	33114-060	4	Screw-HH
31	87-8640	3	Washer-Flat
32	105-1214	1	Hose-HYD

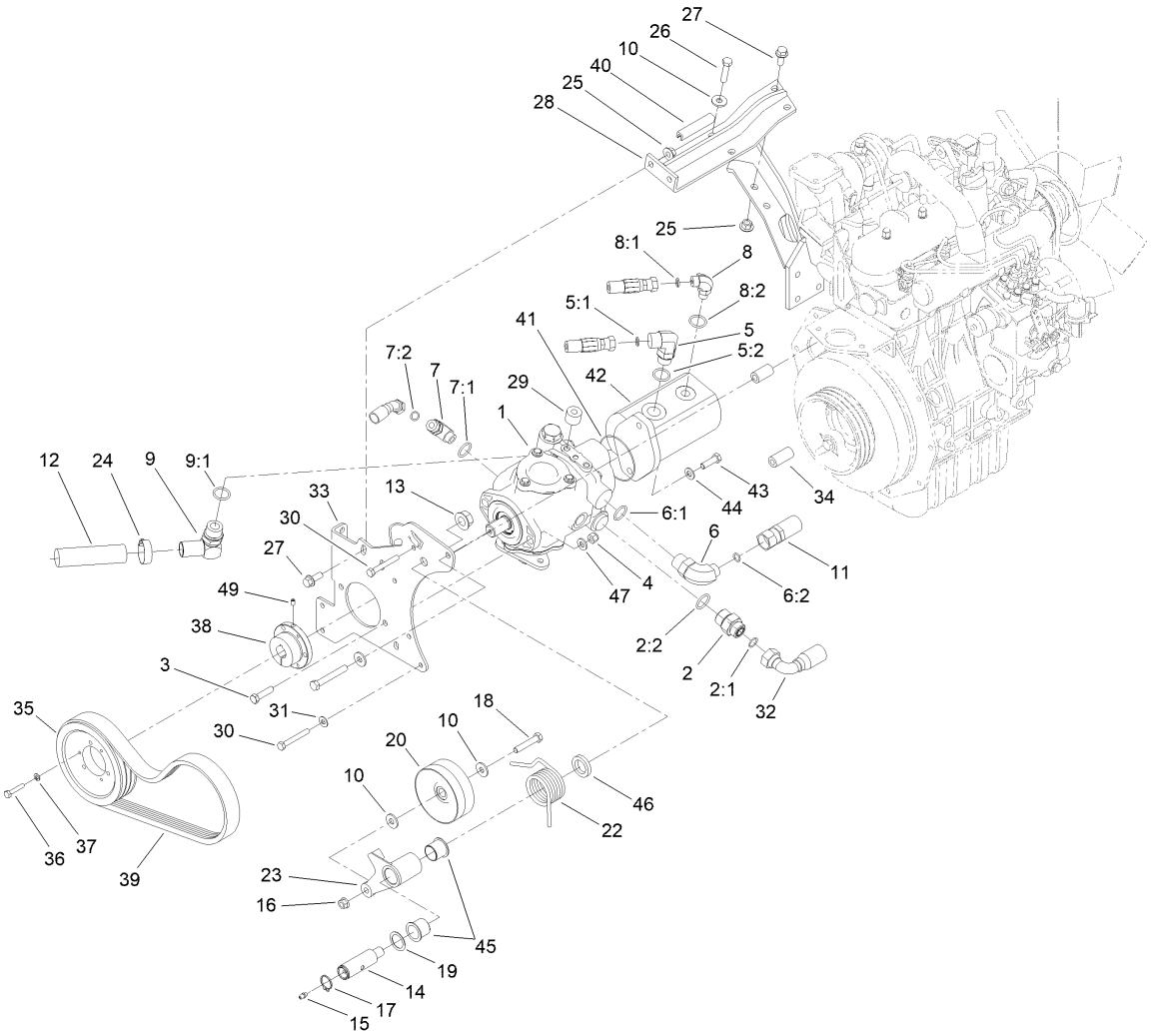

Hydrostat Assembly (continued)

Ref.	Part Number	Qty.	Description
33	120-3375-03	1	Plate-Mount, Pump
34	95-8941	4	Spacer-Mount, Pump
35	120-3350	1	Pulley-3V
36	321-13	3	Screw-HH
37	3253-3	3	Washer-Lock
38	100-4813	1	Bushing-Lock, Taper
39	120-3351	1	Belt-3V
40	70-2041	1	Trim

Ref.	Part Number	Qty.	Description
41	353-949	1	O-Ring
42	108-9036	1	HYD Gear Pump ASM
43	323-7	2	Screw-HH
44	3256-24	2	Washer-Flat
45	99-3631	2	Bushing-Flange
46	99-3625	1	Spacer-Arm, Idler
47	100-4852	2	Washer-Hardened
49	3245-7	1	Screw-Set

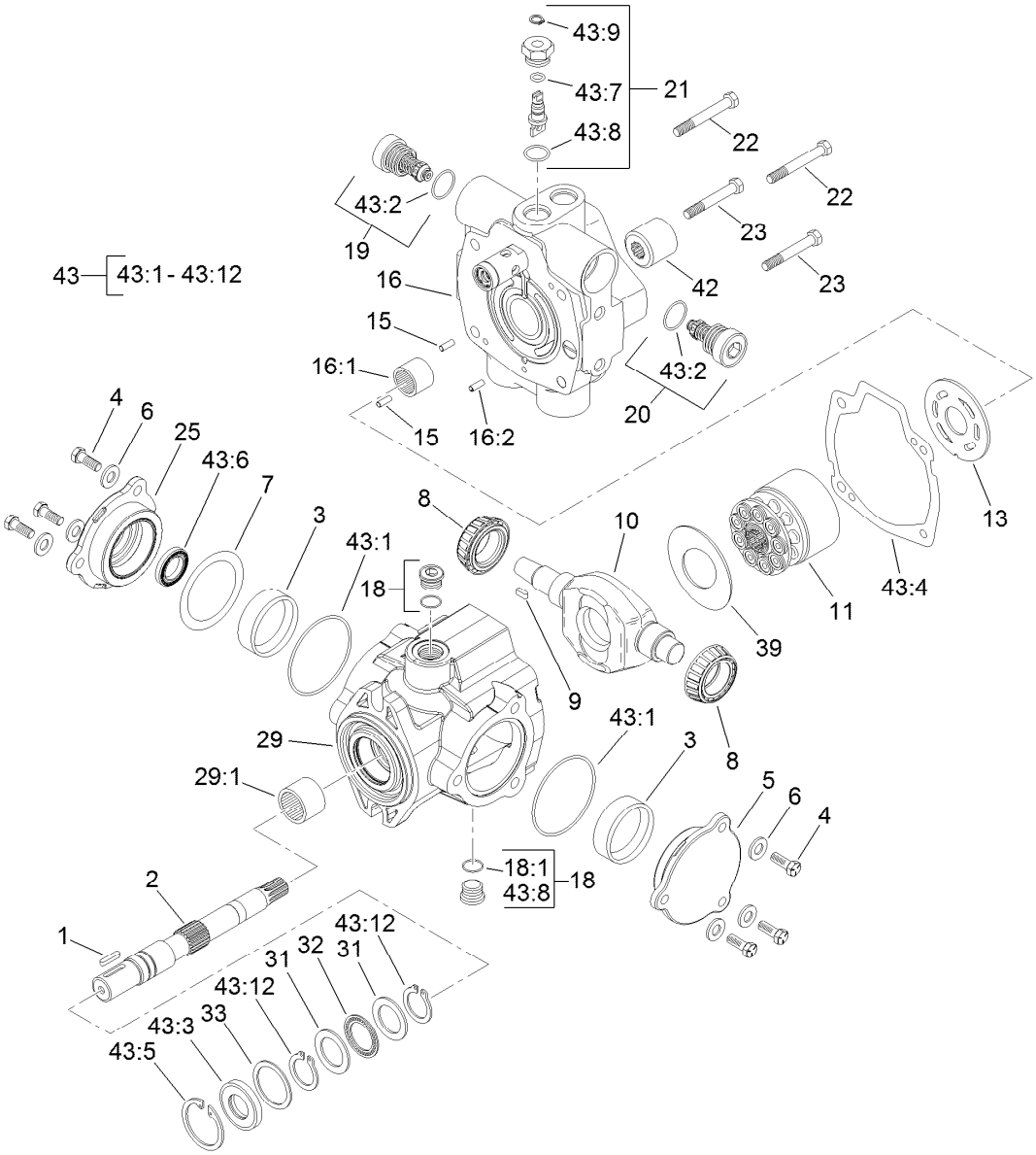

Hydraulic Pump Assembly No. 104-4890

Ref.	Part Number	Qty.	Description
1	94-3645	1	Key
2	94-6359	1	Shaft-Drive
3	104-4046	2	Bearing-Cup
4	98-4640	6	Screw-Cap
5	98-4644	1	Plate-Cover
6	105-9762	6	Washer
7	100-3182	2	Shim Kit
8	98-4639	2	Bearing-Cone
9	94-3646	1	Key
10	104-4888	1	Swashplate
11	76-6070	1	Rotating Kit
13	104-0429	1	Plate-Valve
15	76-6150	2	Pin-Dowel
16	105-3813	1	Endcover Sub ASM
16:1	94-6368	1	Bearing
16:2		1	Pin-Roll ■
18	74-9280	2	Plug ASM
18:1		1	O-Ring ■

Ref.	Part Number	Qty.	Description
19	104-4889	1	Relief Valve ASM
20	105-3812	1	Valve-Check
21	105-3811	1	Valve-Bypass
22	76-6170	2	Capscrew
23	76-6160	2	Capscrew
25	98-4645	1	Plate-Cover
29	100-3176	1	Housing ASM
29:1	94-6363	1	Bearing
31	252-71	2	Washer-Thrust
32	252-66	1	Bearing-Thrust
33	33-3720	1	Washer
39	98-4635	1	Insert-Plate, Cam
42	74-9040	1	Coupler
43	120-5754	1	Seal Kit
43:1		2	O-Ring ■
43:2		2	O-Ring ■
43:3		1	Seal-Shaft ■
43:4		1	Gasket ■

● Not illustrated

■ Not serviced separately

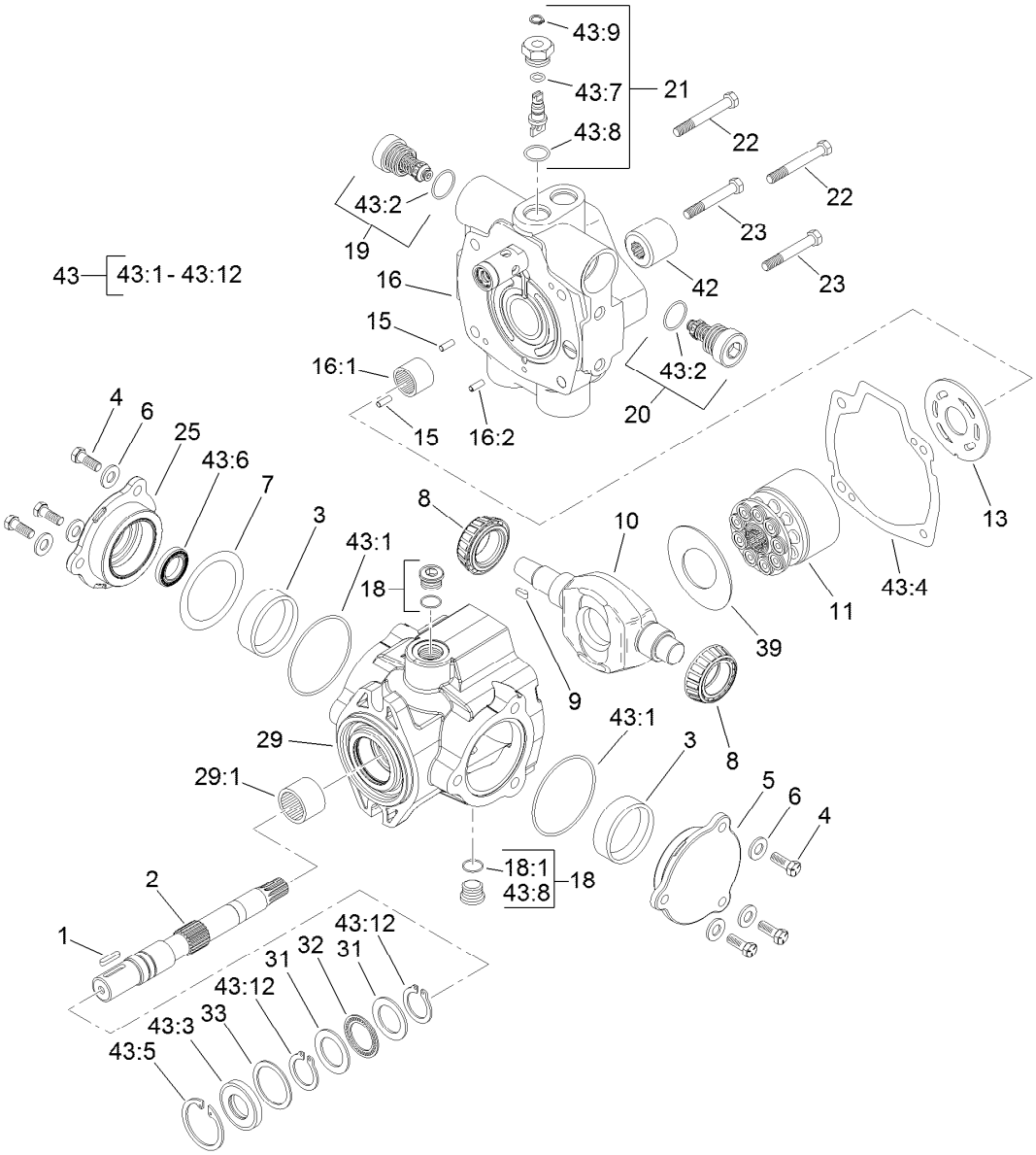

Hydraulic Pump Assembly No. 104-4890 (continued)

Ref.	Part Number	Qty.	Description
43:5		1	Ring-Retaining ■
43:6		1	Seal-Shaft ■
43:7		1	O-Ring ■
43:8		5	O-Ring ■
43:9		1	Ring-Retaining ■

Ref.	Part Number	Qty.	Description
43:10		1	O-Ring ● ■
43:11		1	O Ring-Molded ● ■
43:12		2	Ring-Retaining ■
43:13		1	O-Ring ■

● Not illustrated

■ Not serviced separately

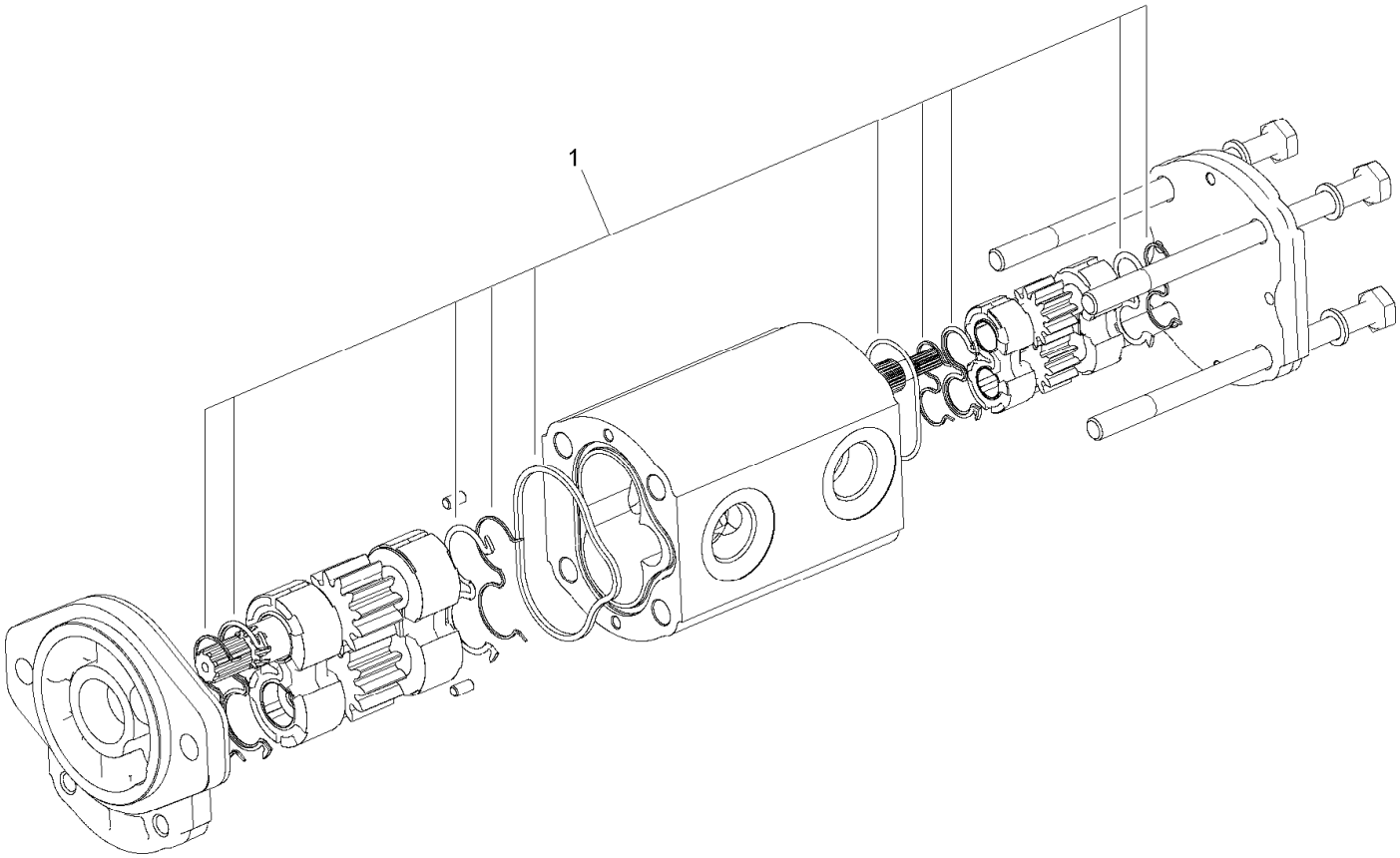

Hydraulic Gear Pump Assembly No. 108-9036

Ref.	*Part Number*	*Qty.*	*Description*
1	110-8755	1	Seal Kit

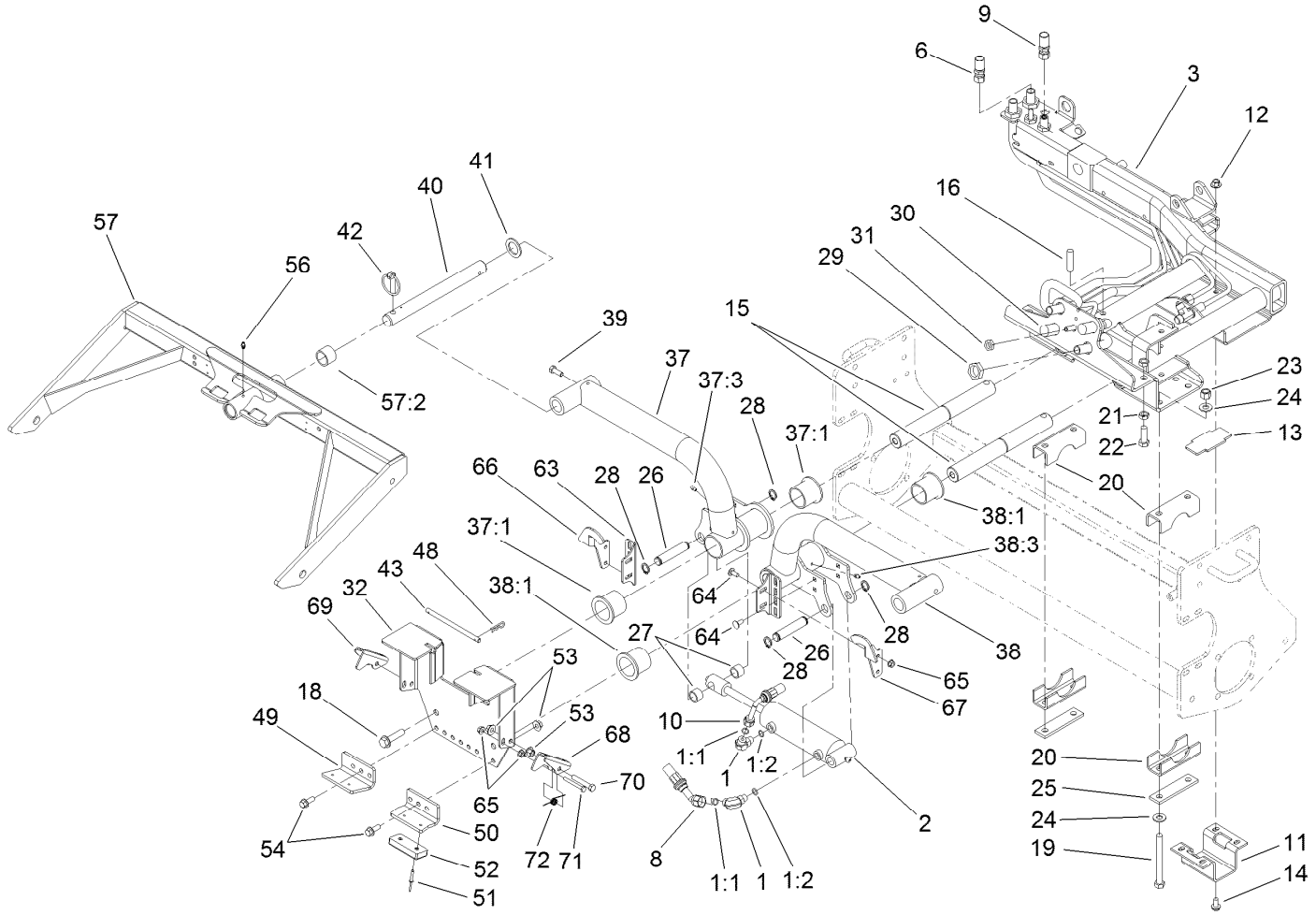

Carrier Assembly

Ref.	Part Number	Qty.	Description
1	340-77	2	Fitting-Elbow, 90 DEG
1:1	237-22	1	O-Ring
1:2	237-42	1	O-Ring
2	112-9916	1	HYD Cylinder ASM
3	100-4939-03	1	Carrier-Sidewinder
6	99-3575	1	Hose-HYD
8	104-0405	1	Hose-HYD
9	108-9013	1	Hose ASM
10	104-0406	1	Hose-HYD
11	95-8904-03	1	Bracket-Clamp
12	32128-43	4	Nut-Flange
13	95-8538	1	Slide-Plastic
14	3234-11	4	Screw-HHF
15	95-8531	2	Shaft-Pivot, Liftarm
16	32121-122	2	Pin-Roll
18	3234-27	2	Screw-HHF
19	325-19	4	Screw-HH
20	95-8884	4	Clamp
21	3218-5	4	Nut-Jam
22	325-7	2	Screw-HH
23	3296-23	4	Nut-Lock, NI

Ref.	Part Number	Qty.	Description
24	87-7270	8	Washer-Thrust
25	99-3373	2	Bar-Support, Slide
26	95-8575	2	Pin-Clevis
27	75-9590	2	Spacer-Cylinder
28	32120-93	4	Ring-Retaining
29	340-74	4	Nut-Lock, Bulkhead
30	99-3640	1	Tube ASM
31	340-78	1	Nut-Lock
32	104-4820-03	1	Bracket-Stop, Carrier
37	115-3466	1	RH Short Liftarm ASM
37:1	69-6470	2	Bushing-Caster
37:3	302-5	1	Fitting-Grease
38	115-3465	1	LH Short Liftarm ASM
38:1	69-6470	2	Bushing-Caster
38:3	302-5	1	Fitting-Grease
39	323-6	2	Screw-HH
40	95-8979	2	Shaft
41	3-6781	2	Washer-Thrust
42	283-71	2	Pin-Lynch
43	104-0472	1	Rod
48	3290-467	2	Pin-Hair

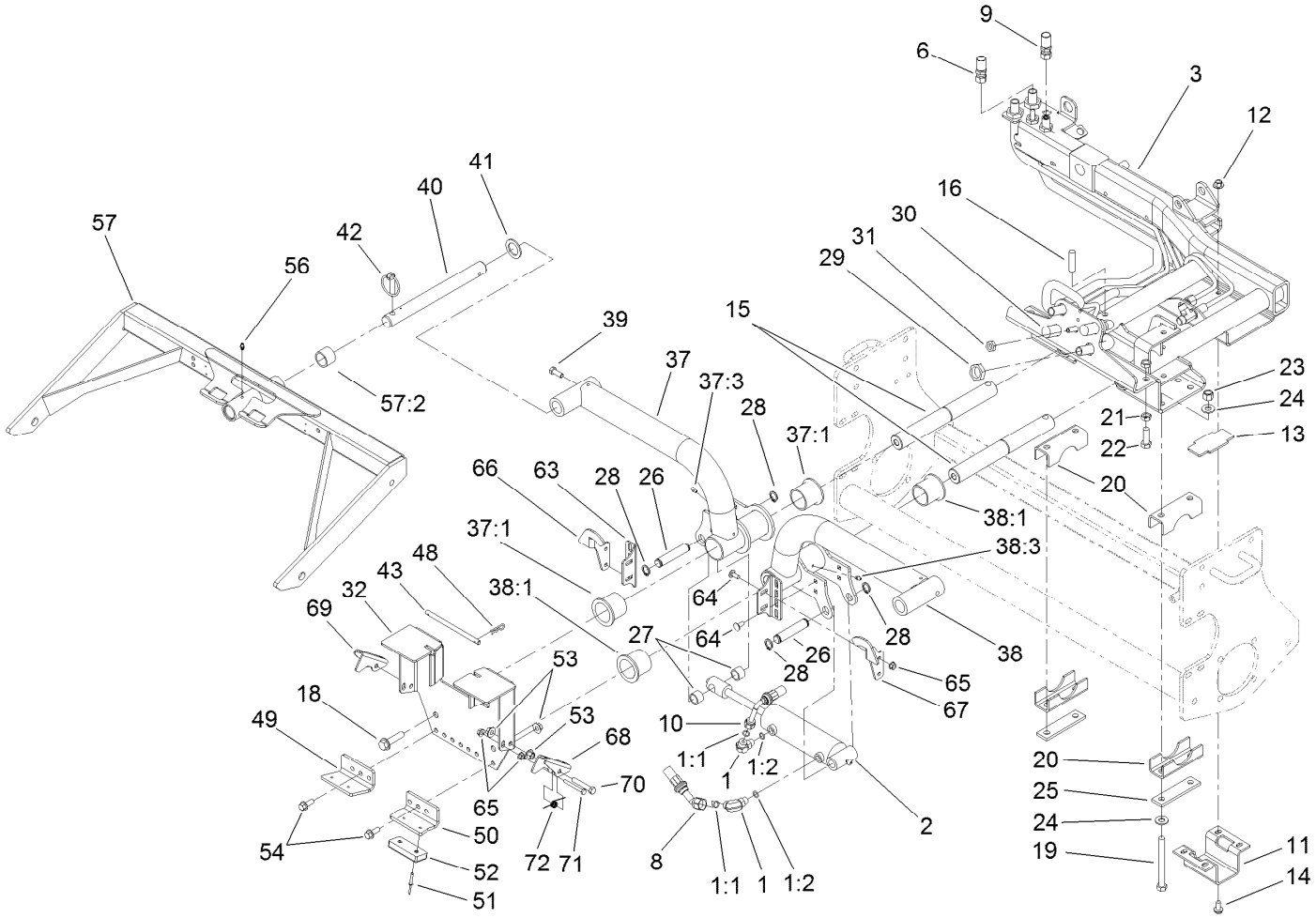

Carrier Assembly (continued)

Ref.	Part Number	Qty.	Description
49	110-8793-03	1	Stop-Deck, RH
50	110-8794-03	1	Stop-Deck, LH
51	3269-11	4	Rivet-Pop
52	86-5350	2	Bumper-Rubber
53	32128-43	4	Nut-Flange
54	3234-11	4	Screw-HHF
56	302-5	2	Fitting-Grease
57	110-8787	2	Front Carrier Frame ASM
57:2	108-4000	2	Bushing
63	104-4828-03	2	Bracket-Actuator

Ref.	Part Number	Qty.	Description
64	3230-23	8	Bolt-CARR
65	32128-44	12	Nut
66	104-4826-03	1	Actuator-RH
67	104-4827-03	1	Actuator-LH
68	104-4819-03	1	Bracket-Pivot, LH
69	104-4825-03	1	Bracket-Pivot, RH
70	323-11	2	Screw-HH
71	322-11	2	Screw-HH
72	104-4821	2	Spring-Torsion

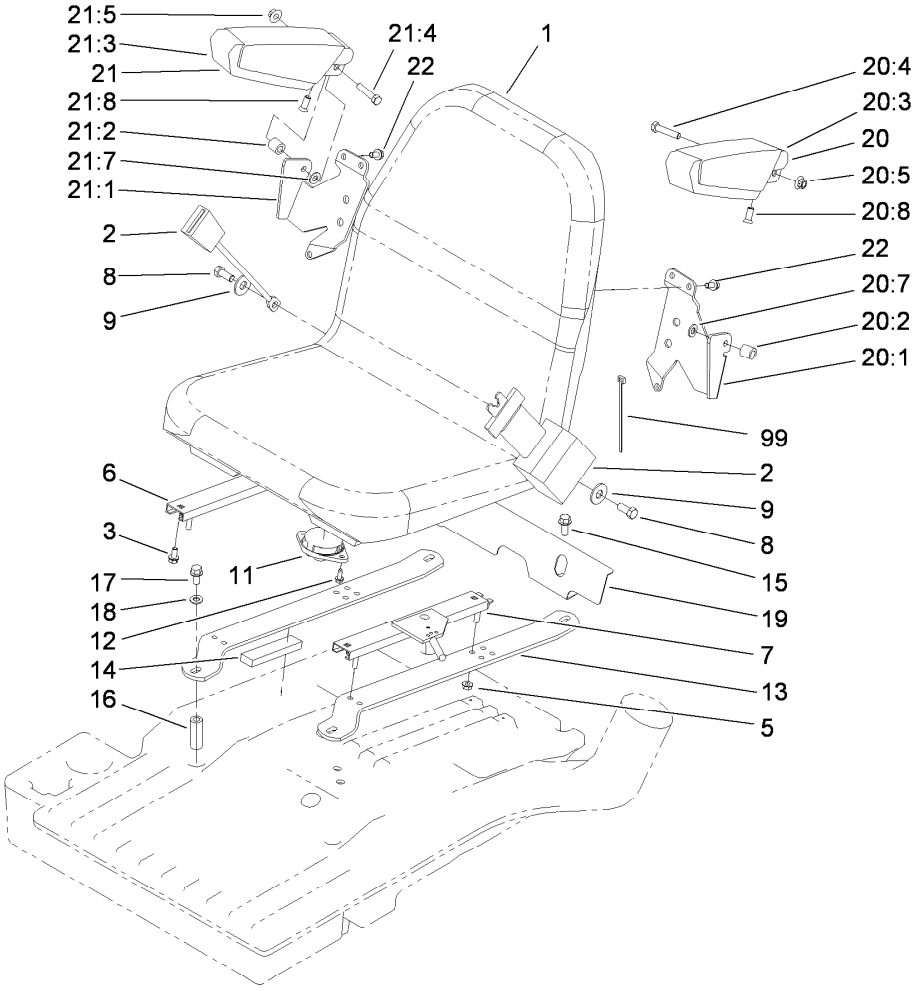

Seat Mounting Assembly

Ref.	Part Number	Qty.	Description
1	104-4620	1	Seat
2	100-4928	1	Belt-Seat
3	3234-14	4	Screw-HHF
5	104-8300	4	Nut-HF, NI
6	92-8990	1	Adjuster-Seat, Non-Locking
7	92-8991	1	Adjuster (W/Latch)
8	3212-4	2	Screw-HH
9	3253-6	2	Washer-Lock
11	92-6282	1	Switch-Seat
12	32144-10	2	Screw-HWH
13	104-0467-03	2	Strap-Support, Seat
14	95-8896	2	Foam
15	3234-11	2	Screw-HHF
16	104-0466	2	Spacer
17	323-14	2	Screw-HH
18	3256-24	2	Washer-Flat
19	104-4833-03	1	Shield-Heat
20	92-7307	1	LH Armrest ASM

Ref.	Part Number	Qty.	Description
20:1	69-0760	1	Bracket-Arm, LH
20:2	92-7301	1	Spacer
20:3	69-1180	1	Armrest
20:4	323-9	1	Screw-HH
20:5	32128-19	1	Nut-HF Lock,Large Flg
20:7	3256-24	1	Washer-Flat
20:8	92-7318	1	Screw
21	92-7306	1	RH Armrest ASM
21:1	69-0770	1	Bracket-Arm, RH
21:2	92-7301	1	Spacer
21:3	69-1180	1	Armrest
21:4	323-9	1	Screw-HH
21:5	32128-19	1	Nut-HF Lock,Large Flg
21:7	3256-24	1	Washer-Flat
21:8	92-7318	1	Screw
22	3234-14	6	Screw-HHF
99	3290-378	1	Tie-Cable

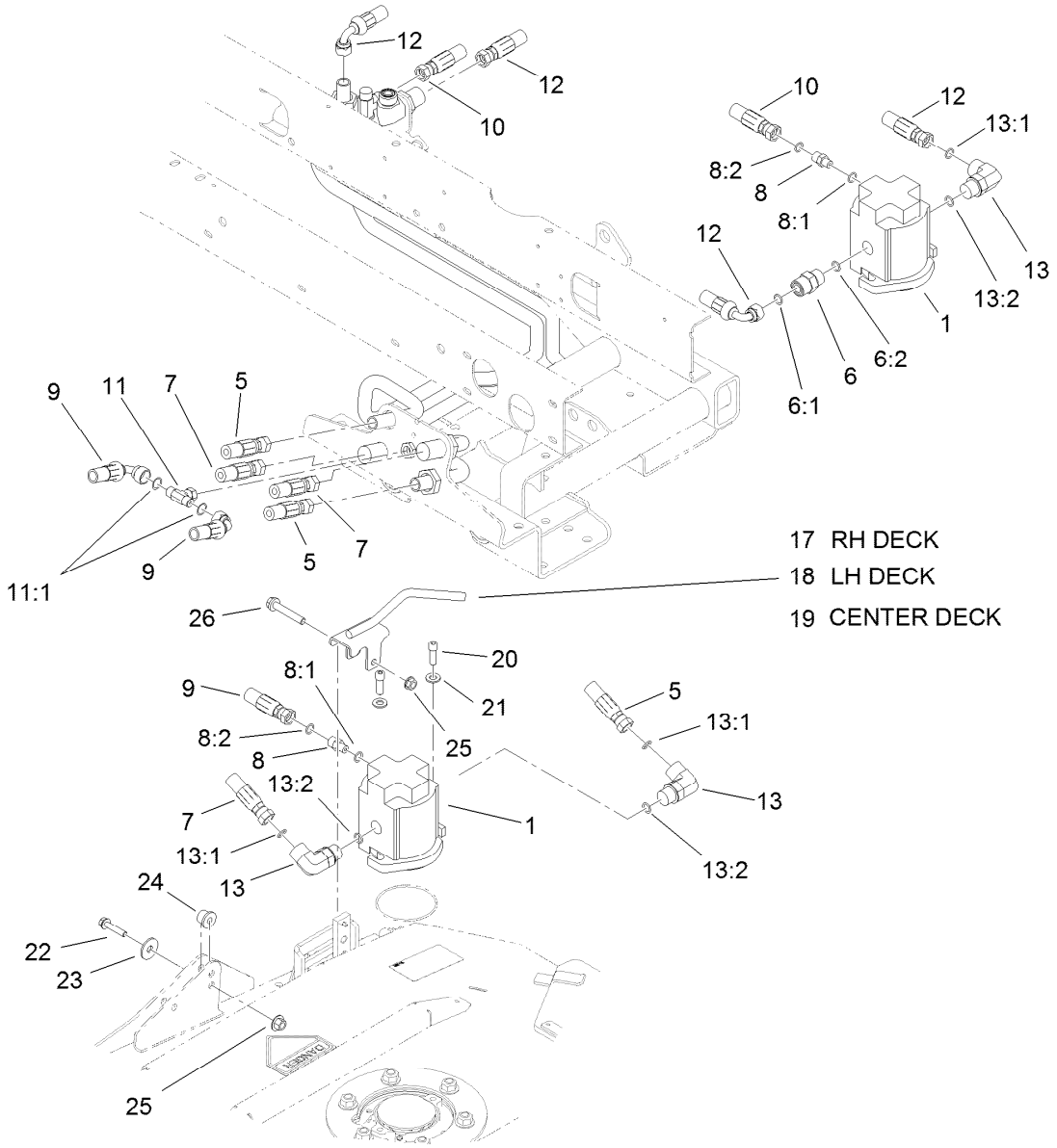

Rotary Motor Assembly

Ref.	Part Number	Qty.	Description
1	117-5141	3	HYD Motor ASM
5	105-1216	2	Hose-HYD
6	340-7	1	Fitting-Straight
6:1	237-65	1	O-Ring
6:2	237-80	1	O-Ring
7	105-1215	2	Hose-HYD
8	340-92	3	Fitting-Straight
8:1	237-78	1	O-Ring
8:2	237-21	1	O-Ring
9	104-1080	2	Hose-HYD
10	100-4876	1	Hose-HYD
11	99-3477	1	Fitting-Tee
11:1	237-42	2	O-Ring
12	100-4880	2	Hose-HYD

Ref.	Part Number	Qty.	Description
13	340-17	5	Fitting-Elbow, 90 DEG
13:1	237-65	1	O-Ring
13:2	237-80	1	O-Ring
17	112-9901-03	1	Guard-Foot, RH
18	112-9902-03	1	Guard-Foot, LH
19	112-9900-03	1	Guard-Foot
20	3274-7	6	Screw-HSH
21	3256-24	6	Washer-Flat
22	323-52	6	Screw-HH
23	93-8806	6	Washer-Hardened
24	95-8803	6	Bushing-Flange
25	104-8301	10	Nut-HF, NI
26	323-11	4	Screw-HH

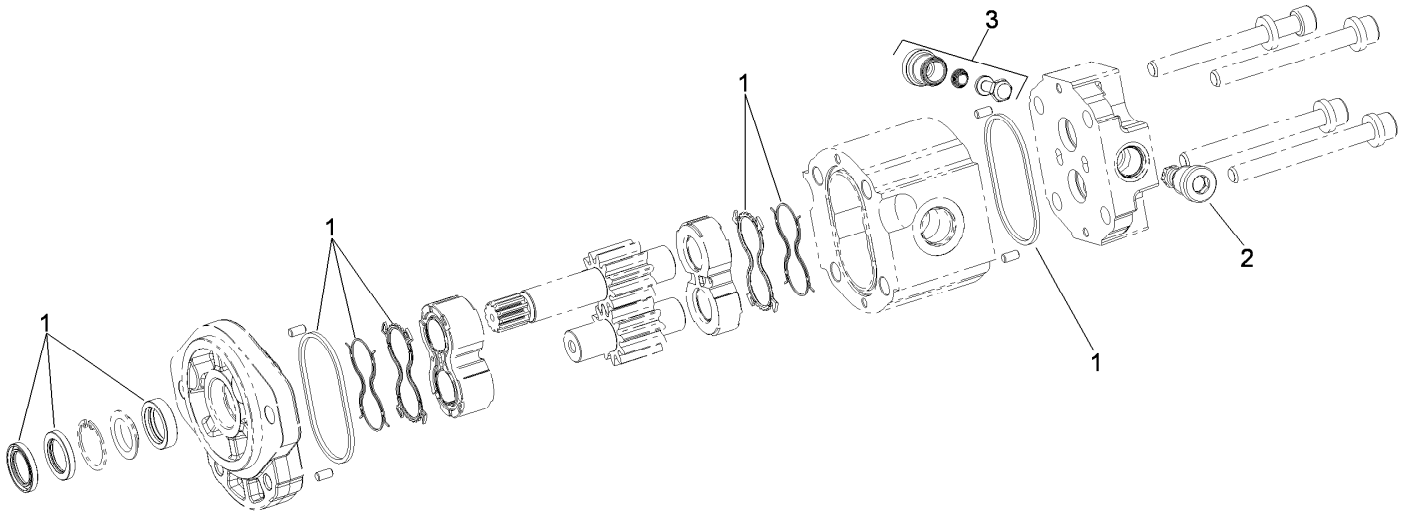

Gear Motor Assembly No. 117-5141

Ref.	*Part Number*	*Qty.*	*Description*
1	117-0235	1	Seal Kit
2	107-7820	1	Valve-Relief
3	107-7821	1	Valve-Anticavitation

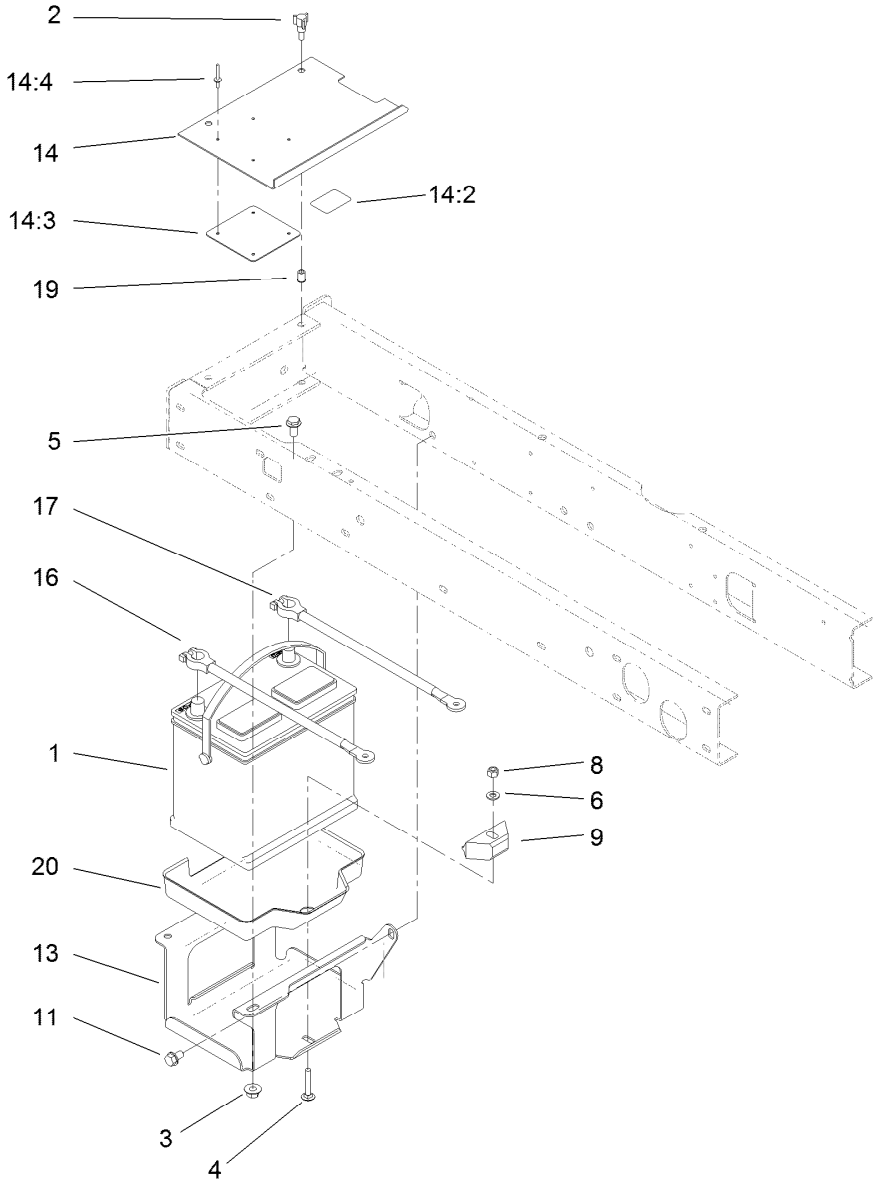

Battery Assembly

Ref.	Part Number	Qty.	Description
1	104-9979	1	Battery
2	233-70	2	Knob-Star, Three
3	32128-43	3	Nut-Flange
4	3230-6	1	Bolt-CARR
5	3234-1	3	Screw-HHF
6	3256-23	1	Washer-Plain
8	3296-29	1	Nut-Lock, NI
9	66-2490	1	Retainer-Battery
11	32144-15	1	Screw-HHFTF

Ref.	Part Number	Qty.	Description
13	95-8796-03	1	Support-Battery
14	99-3602	1	Battery Cover ASM
14:2	93-7276	1	Decal-Danger
14:3	87-7620	1	Shield-Terminal, Battery
14:4	3269-27	4	Rivet-Snap
16	95-8853	1	Cable-Battery, Positive
17	95-8854	1	Cable-Battery, Negative
19	32148-6	2	Nut-Clinch
20	99-3513	1	Tray-Battery

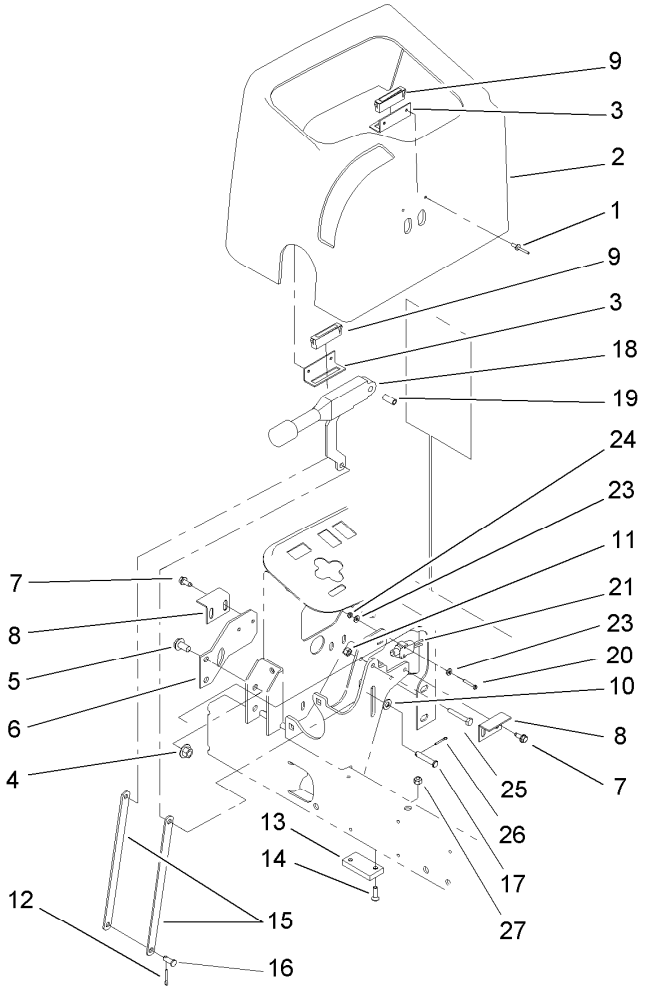

Parking Brake Assembly

Ref.	Part Number	Qty.	Description
1	3269-5	4	Rivet-Pop
2	95-8707	1	Cover-Dash
3	95-8763	2	Bracket-Hold Down, Cover
4	32128-43	2	Nut-Flange
5	3234-1	2	Screw-HHF
6	95-8764-03	1	Support-Magnet
7	32144-10	4	Screw-HWH
8	95-8765	2	Bracket-Strike, Magnet
9	58-4250	2	Catch-Magnetic
10	3256-23	3	Washer-Plain
11	3296-42	1	Nut-Lock, NI
12	3272-10	1	Pin-Cotter
13	95-8684	1	Pad-Bumper

Ref.	Part Number	Qty.	Description
14	3289-4	2	Screw-FH
15	104-4628-03	2	Link-Brake, Parking
16	283-62	1	Pin-Clevis
17	94-3829	1	Pin-Clevis
18	104-4817	1	Lever-Brake
19	87-4710	1	Spacer-Brake, Parking
20	32105-9	2	Screw
21	95-8900	1	Switch
23	3256-21	4	Washer-Flat
24	3296-9	2	Nut-Hex
25	321-10	1	Screw-HH
26	3272-6	1	Pin-Cotter
27	32128-32	2	Nut-HHF

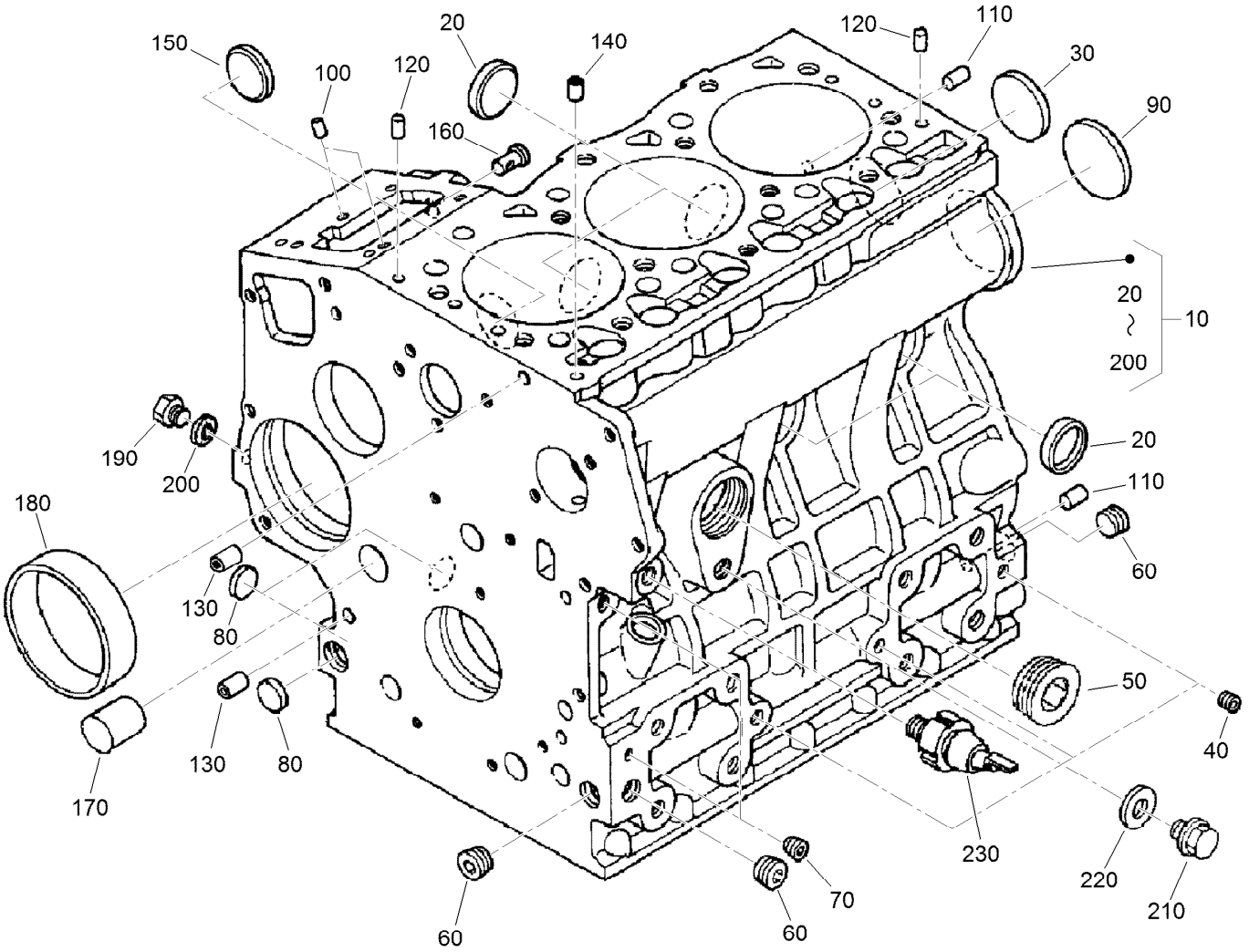

Crankcase Assembly

Ref.	Part Number	Qty.	Description
10	115-3443	1	Crankcase ASM
20	98-9398	4	Cap-Sealing
30	98-7539	1	Cap-Sealing
40	98-7540	3	Plug
50	105-3779	1	Plug
60	98-9597	3	Plug
70	98-7487	2	Plug
80	98-9379	3	Plug-Expansion
90	98-9668	1	Plug-Expansion
100	98-9375	2	Pin-Straight
110	98-9377	2	Pin-Straight
120	98-9376	2	Pin-Straight
130	98-9387	2	Pin-Pipe
140	98-9539	1	Pin-Pipe
150	98-9599	1	Plug
160	98-9630	1	Pin-Spring, Start
170	98-9675	1	Plug
180	98-9656	1	Bushing-Governor, Gear
190	120-2559	1	Plug
200	98-7428	1	Gasket
210	99-3447	1	Plug
220	106-7056	1	Gasket
230	98-9416	1	Switch-Oil

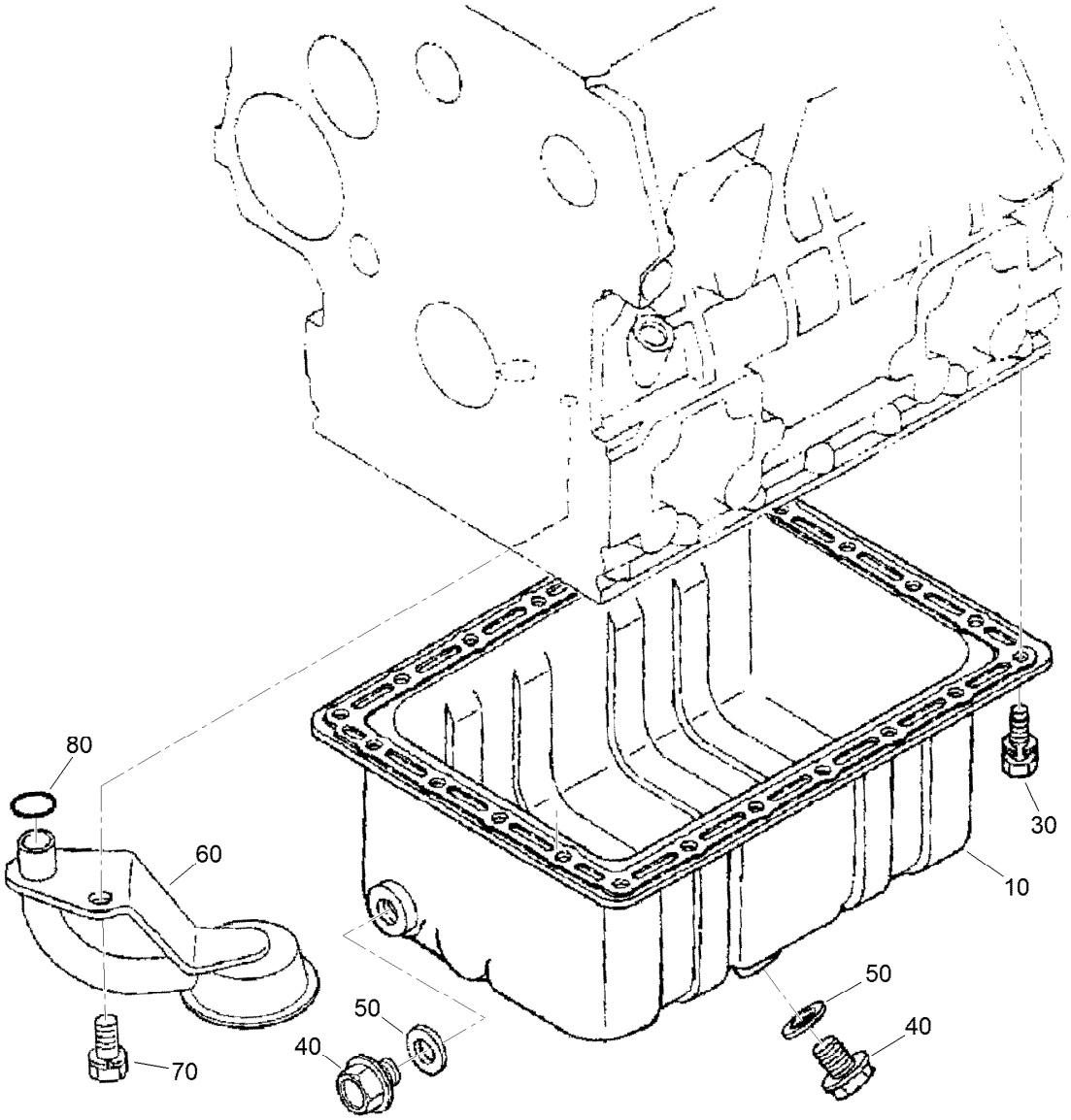

Oil Pan Assembly

Ref.	Part Number	Qty.	Description
10	98-9685	1	Pan-Oil
30	98-9351	22	Bolt
40	114-8151	2	Plug-Drain
50	98-7524	2	Gasket
60	112-7044	1	Head-Filter
70	98-7526	1	Bolt
80	105-3776	1	O-Ring

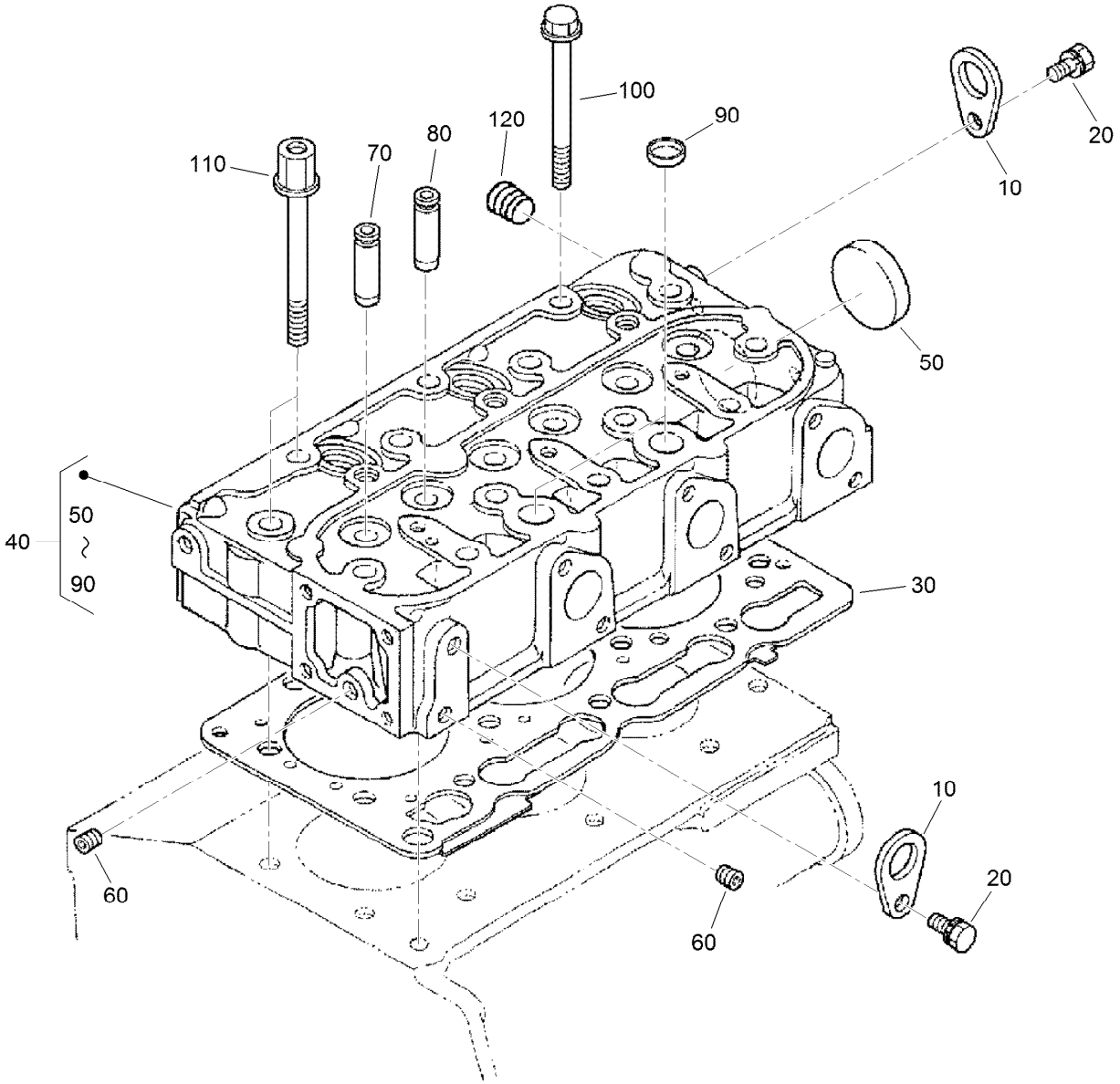

Cylinder Head Assembly

Ref.	*Part Number*	*Qty.*	*Description*
10	98-7531	2	Hook-Engine
20	100-9195	2	Bolt
30	108-6573	1	Gasket-Head, Cylinder
40	115-3445	1	Cylinder Head ASM
50	105-3705	1	Cap-Sealing
60	98-7540	2	Plug
70	107-9066	3	Guide-Valve, Inlet
80	107-9067	3	Guide-Valve, Exhaust
90	98-9389	2	Cap-Sealing
100	98-9479	12	Bolt-Head, Cylinder
110	98-9647	2	Bolt-Head, Cylinder
120	98-9444	1	Plug

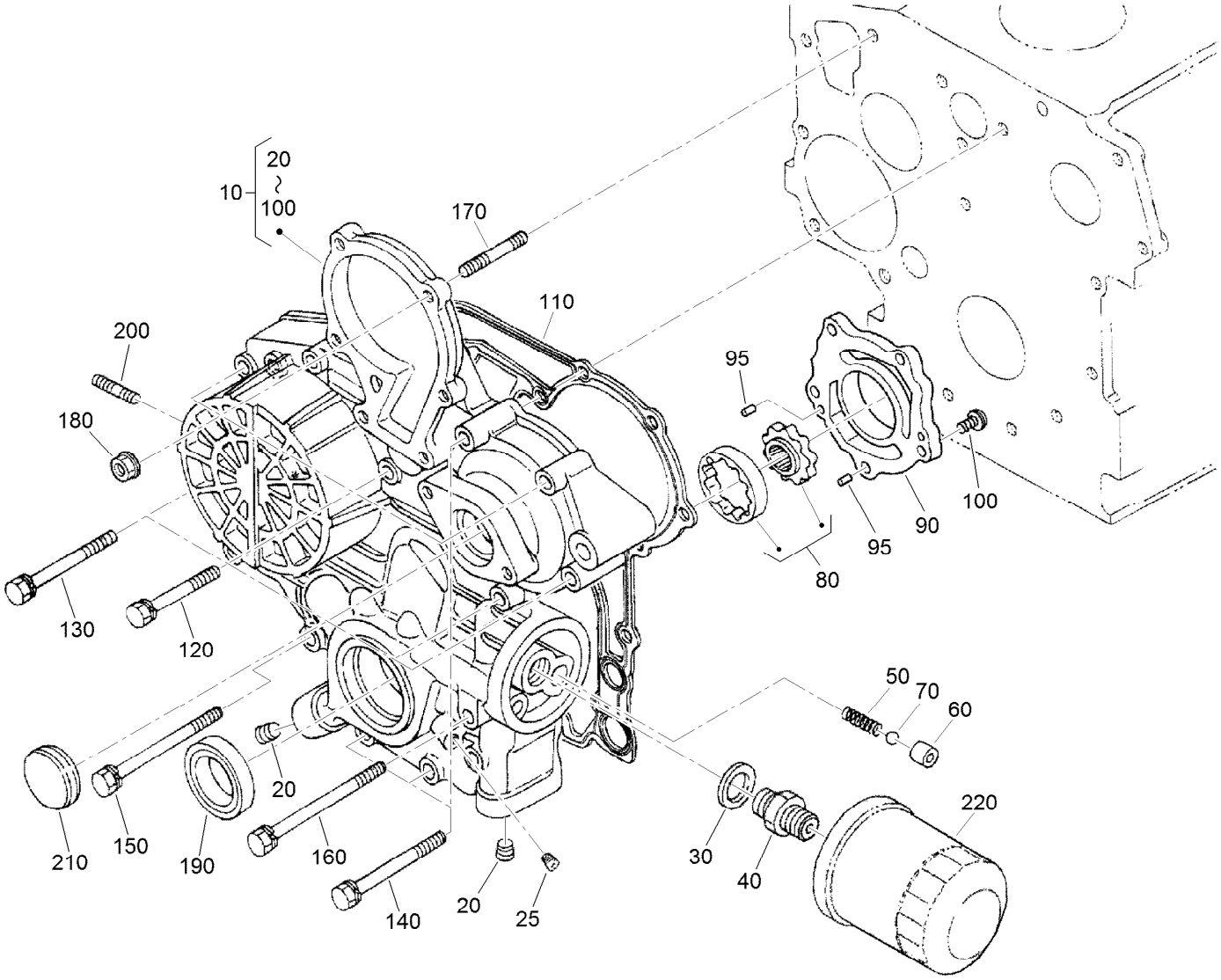

Gear Case and Oil Filter Cartridge Assembly

Ref.	Part Number	Qty.	Description
10	115-4105	1	Gear Case ASM
20	98-9598	2	Plug
25	98-7487	1	Plug
30	98-7562	1	Washer-Plain
40	98-9388	1	Joint-Pipe
50	98-9544	1	Spring
60	98-9543	1	Seat-Valve
70	98-9380	1	Ball
80	98-9540	1	Oil Pump Rotor ASM
90	107-9069	1	Cover-Pump, Oil
95	107-9072	2	Pin-Straight
100	107-9071	5	Screw

Ref.	Part Number	Qty.	Description
110	98-9633	1	Gasket-Case, Gear
120	107-9073	3	Bolt
130	105-3797	4	Bolt
140	98-9356	4	Bolt
150	107-9074	1	Bolt
160	98-9586	1	Bolt
170	105-3709	1	Stud
180	100-2203	1	Nut-Flange
190	119-8038	1	Seal-Oil
200	105-3710	2	Stud
210	98-9641	1	Cover-Case, Gear
220	108-3841	1	Filter-Oil

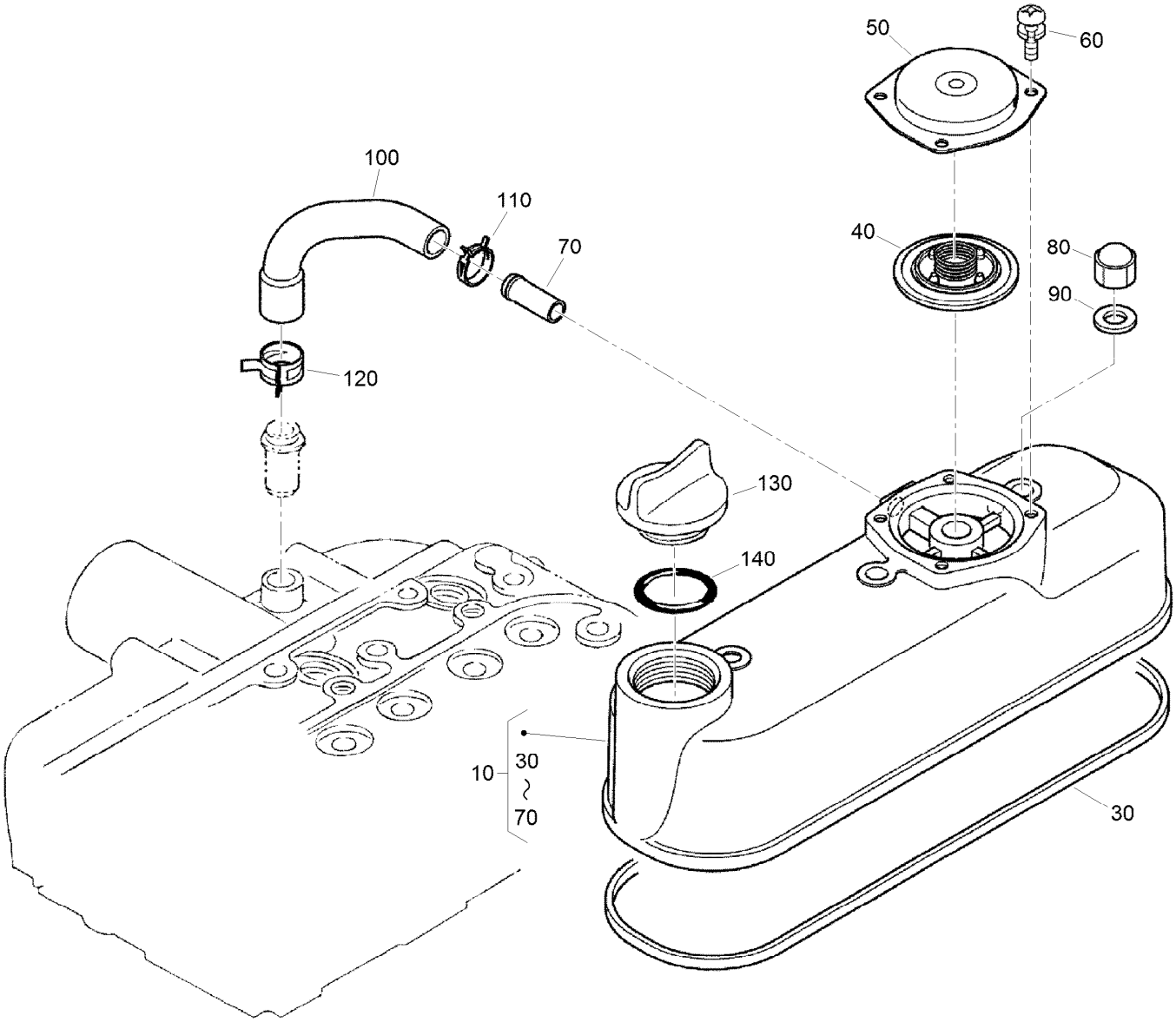

Cylinder Head Cover Assembly

Ref.	*Part Number*	*Qty.*	*Description*
10	115-3446	1	Cylinder Head Cover ASM
30	98-9615	1	Gasket-Cover, Head
40	110-3715	1	Valve-Breather
50	110-3714	1	Cover-Breather
60	98-9364	4	Screw (With Washer)
70	98-7766	1	Pipe-Return, Water
80	98-9455	3	Nut-Cap
90	98-9454	3	Gasket
100	107-7836	1	Tube-Breather
110	108-2859	1	Clamp-Hose
120	108-2860	1	Clamp-Hose
130	107-9075	1	Plug-Filler, Oil
140	99-3446	1	O-Ring

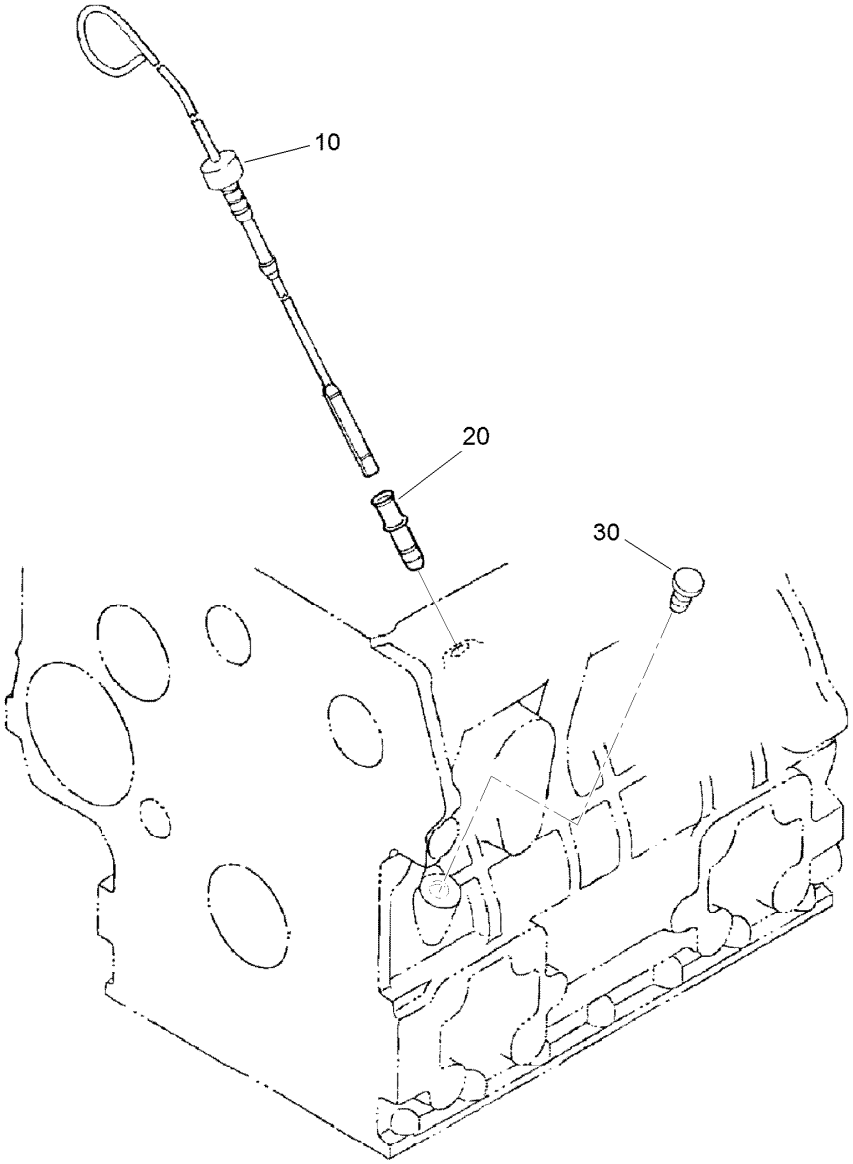

Dipstick and Guide Assembly

Ref.	*Part Number*	*Qty.*	*Description*
10	107-9076	1	Gauge-Oil
20	105-4580	1	Guide-Gauge, Oil
30	110-3720	1	Plug-Gauge, Oil

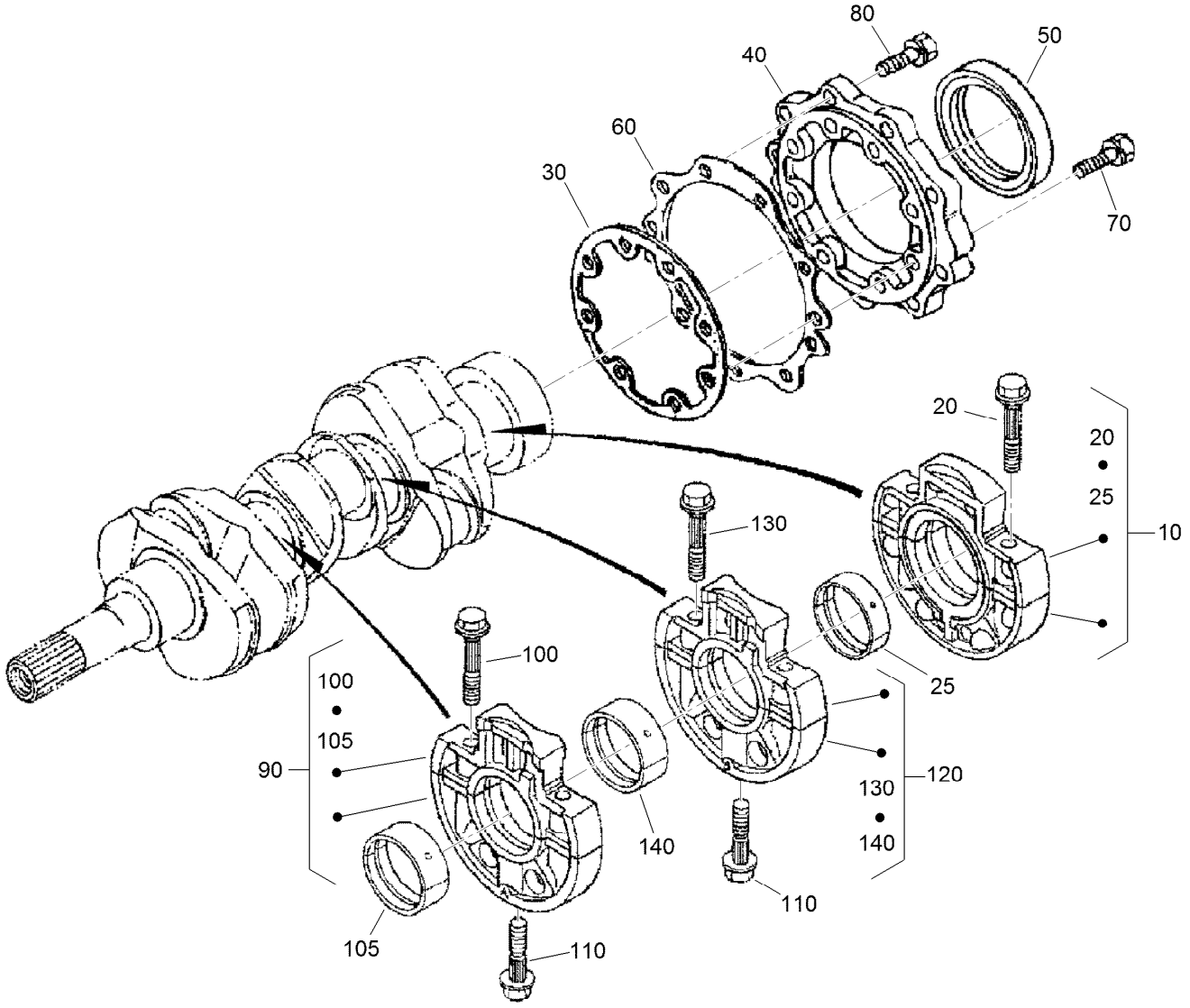

Main Bearing Case Assembly

Ref.	Part Number	Qty.	Description
10	112-7026	1	Wheel Bearing Case ASM
20	98-9484	2	Bolt-Case, Bearing
25	115-4121	1	Metal-Crankshaft (STD)
25	112-7039	1	Metal-Crankshaft (0.2Mm)
25	112-7040	1	Metal-Crankshaft (-0.4Mm)
30	98-9634	1	Gasket-Case, Bearing
40	112-7046	1	Cover-Case, Bearing
50	112-0180	1	Seal-Oil
60	112-7037	1	Gasket-Cover, Case
70	98-9352	8	Bolt
80	98-7568	9	Bolt

Ref.	Part Number	Qty.	Description
90	115-4106	1	Main Bearing Case ASM
100	98-9484	2	Bolt-Case, Bearing
105	112-7011	1	Bearing-Main (STD)
105	112-7012	1	Metal-Crankpin (-0.2MM)
105	112-7013	1	Metal-Crankpin (-0.4MM)
110	98-9485	2	Bolt-Case, Bearing
120	115-4107	1	Main Bearing Case ASM
130	98-9484	2	Bolt-Case, Bearing
140	112-7011	1	Bearing-Main (STD)
140	112-7012	1	Metal-Crankpin (-0.2MM)
140	112-7013	1	Metal-Crankpin (-0.4MM)

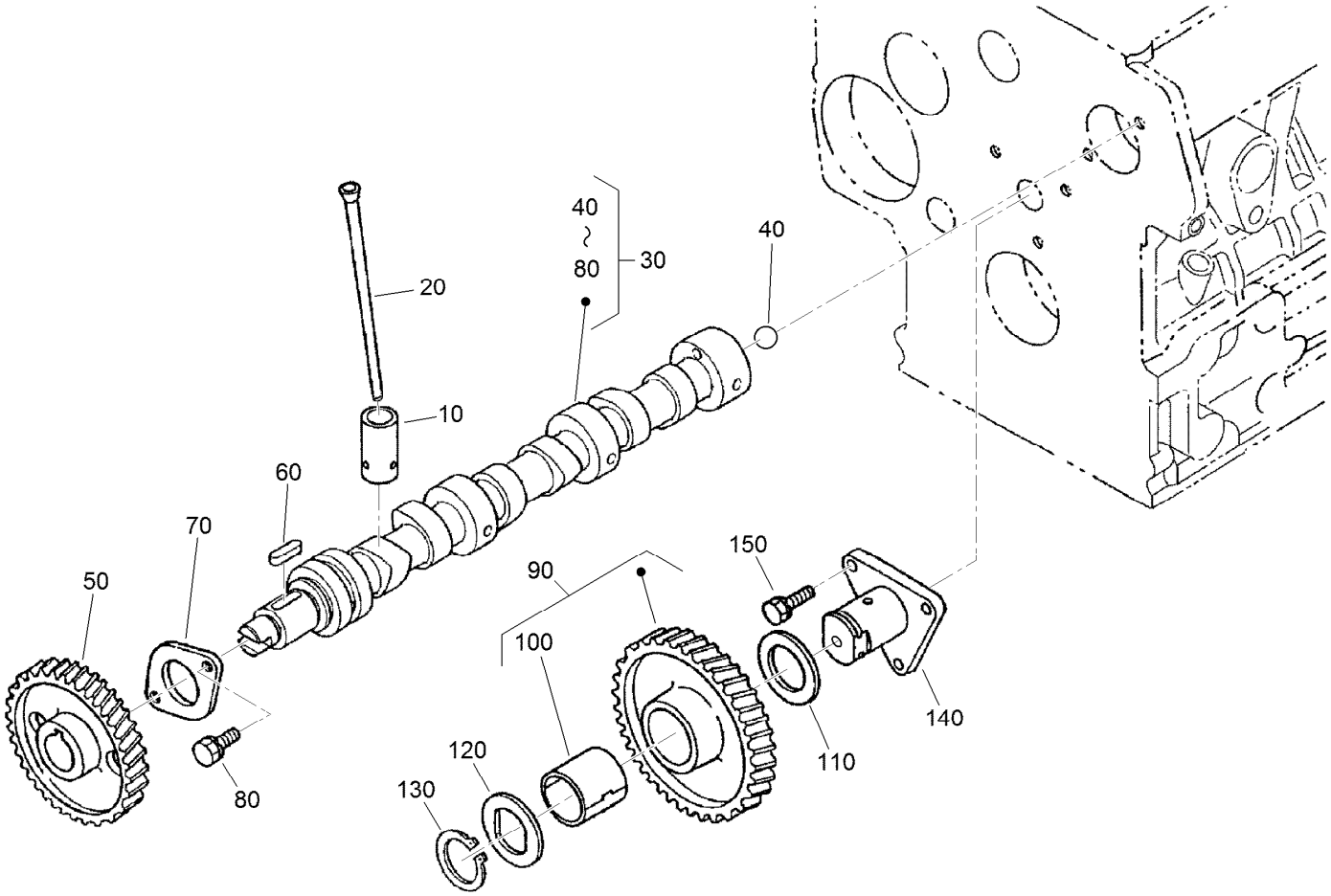

Camshaft and Idle Gear Shaft Assembly

Ref.	Part Number	Qty.	Description
10	112-0185	6	Tappet
20	98-9509	6	Rod-Push
30	108-6576	1	Camshaft ASM
40	110-3729	1	Ball
50	98-9512	1	Gear-Cam
60	98-9378	1	Key-Feather
70	98-9510	1	Stopper-Camshaft
80	98-7692	2	Bolt
90	98-9649	1	Idle Gear ASM
100	98-9650	1	Bushing-Gear, Idle
110	98-9535	1	Collar-Gear, Idle
120	98-9536	1	Collar-Gear, Idle
130	98-9534	1	Circlip-Gear, Idle
140	98-9533	1	Shaft-Gear, Idle
150	98-7692	3	Bolt

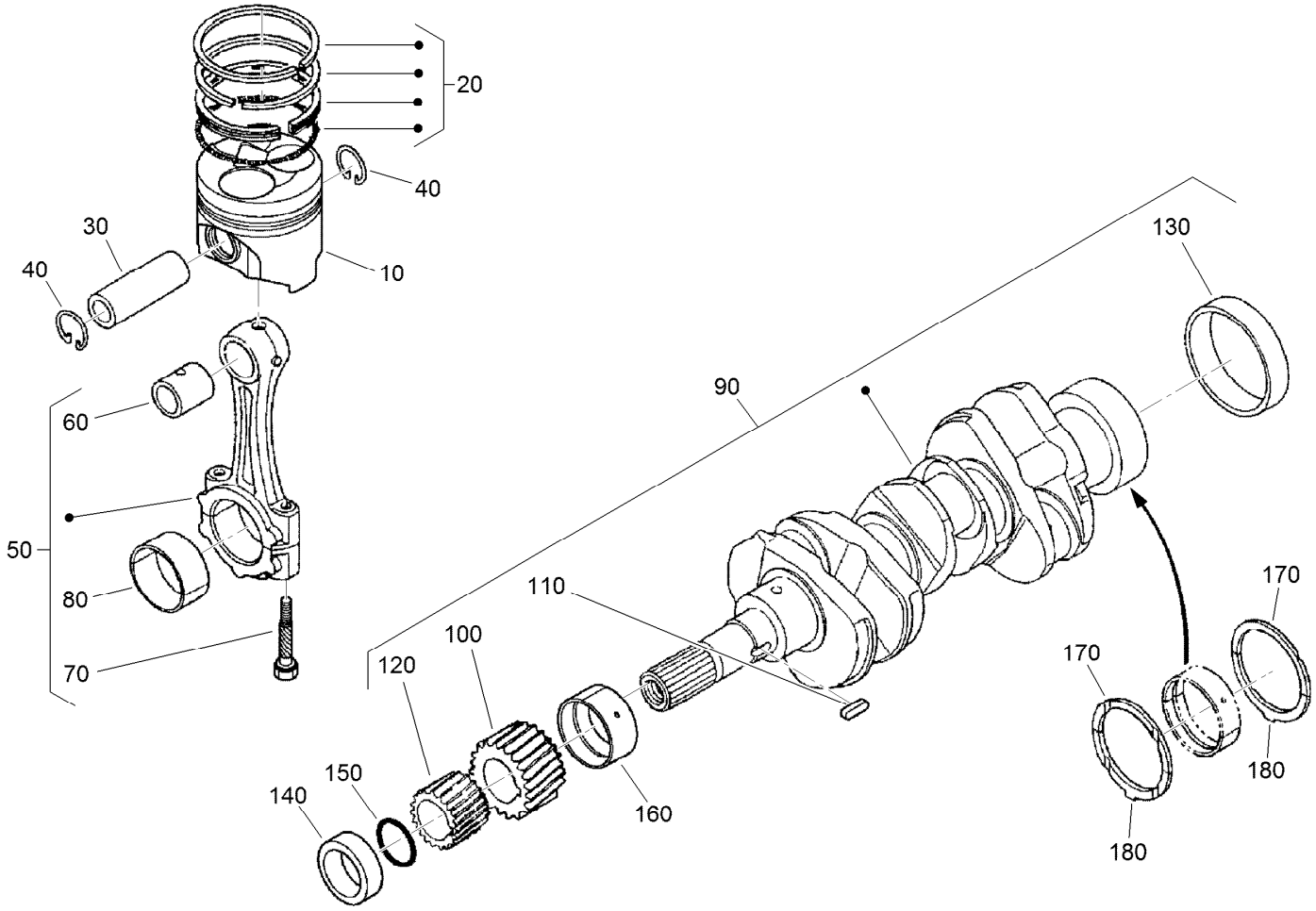

Piston and Crankshaft Assembly

Ref.	Part Number	Qty.	Description
10	112-8404	3	Piston (STD)
10	112-8414	3	Piston (+0.5Mm)
20	98-9551	3	Piston Ring ASM (STD)
20	108-1404	3	Piston Ring ASM (+0.5MM)
30	98-9513	3	Pin-Piston
40	98-9514	6	Circlip-Pin, Piston
50	117-7586	3	Connecting Rod ASM
60	115-3014	3	Bushing-Pin, Piston
70	98-9517	6	Bolt-Rod, Connecting
80	98-9553	3	Bearing-Rod (STD)
80	117-7587	3	Metal-Crankpin (-0.2MM)
80	117-7588	3	Metal-Crankpin (-0.4MM)
90	98-9642	1	Crankshaft ASM
100	117-7561	1	Gear-Crankshaft

Ref.	Part Number	Qty.	Description
110	98-9666	1	Key
120	98-9542	1	Gear-Drive, Oil Pump
130	98-9522	1	Sleeve-Crankshaft
140	98-9521	1	Collar-Crankshaft
150	105-3783	1	O-Ring
160	112-7005	1	Bearing-Main (STD)
160	112-7009	1	Metal-Crankpin (-0.2MM)
160	112-7010	1	Metal-Crankpin (-0.4MM)
170	98-9413	2	Bearing-Thrust (STD)
170	98-9414	2	Bearing-Thrust (0.2MM)
170	98-9415	2	Bearing-Thrust (0.4MM)
180	98-9688	2	Bearing-Thrust (STD)
180	98-9689	2	Bearing-Thrust (0.2MM)
180	98-9690	2	Bearing-Thrust (0.4MM)

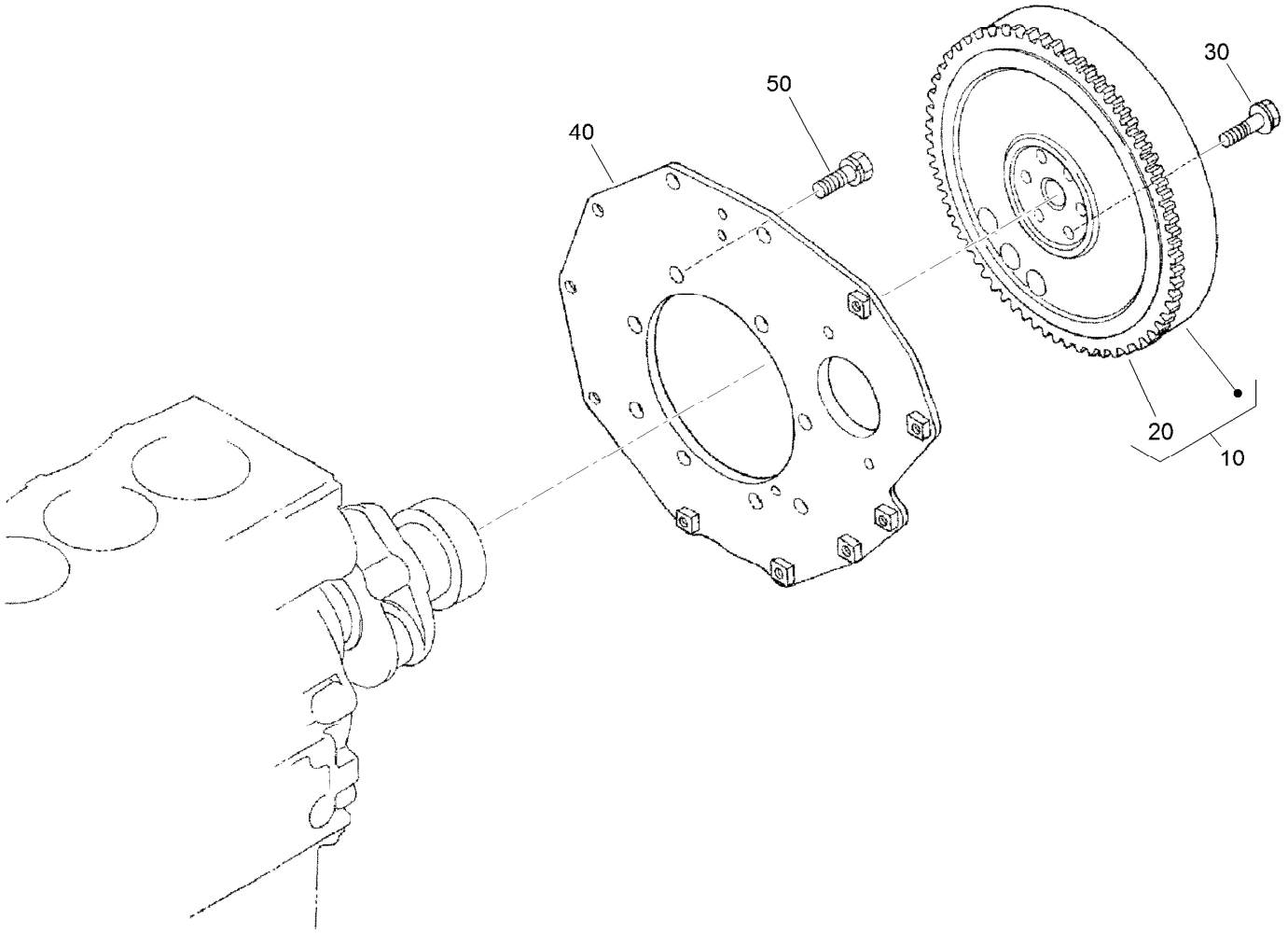

Flywheel Assembly

Ref.	Part Number	Qty.	Description
10	105-3784	1	Flywheel ASM
20	115-3015	1	Gear-Ring
30	98-9537	6	Bolt-Flywheel
40	98-9486	1	Plate-End, Rear
50	98-9392	8	Bolt

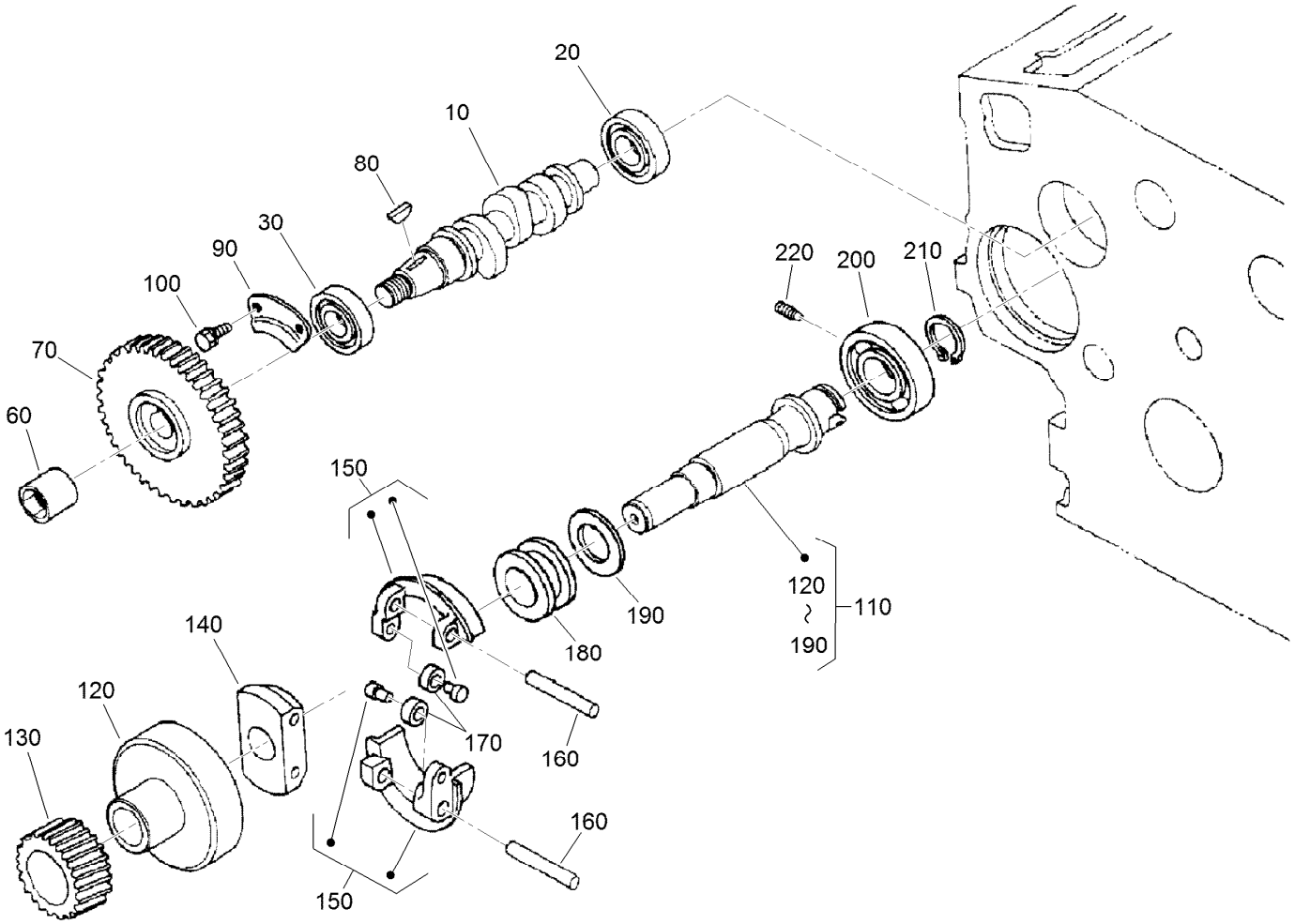

Fuel Camshaft and Governor Shaft Assembly

Ref.	Part Number	Qty.	Description
10	98-9459	1	Camshaft-Fuel
20	107-9077	1	Bearing-Ball
30	107-9078	1	Bearing-Ball
60	98-9590	1	Nut-Cap
70	120-2562	1	Gear-Pump, Injection
80	98-9595	1	Key-Woodruff
90	98-9511	1	Stopper-Fuel, Camshaft
100	98-7692	2	Bolt
110	98-9644	1	Governor Shaft ASM
120	98-9562	1	Holder-Gear, Governor

Ref.	Part Number	Qty.	Description
130	98-9673	1	Gear-Governor
140	98-9561	1	Holder-Weight, Governor
150	98-9559	2	Governor Weight ASM
160	98-9560	2	Shaft-Weight, Governor
170	98-9692	2	Roller
180	98-9563	1	Sleeve-Governor
190	98-9564	1	Washer-Thrust
200	107-9079	1	Bearing-Ball
210	98-9657	1	Circlip-Shaft, Governor
220	98-9565	1	Screw-Set

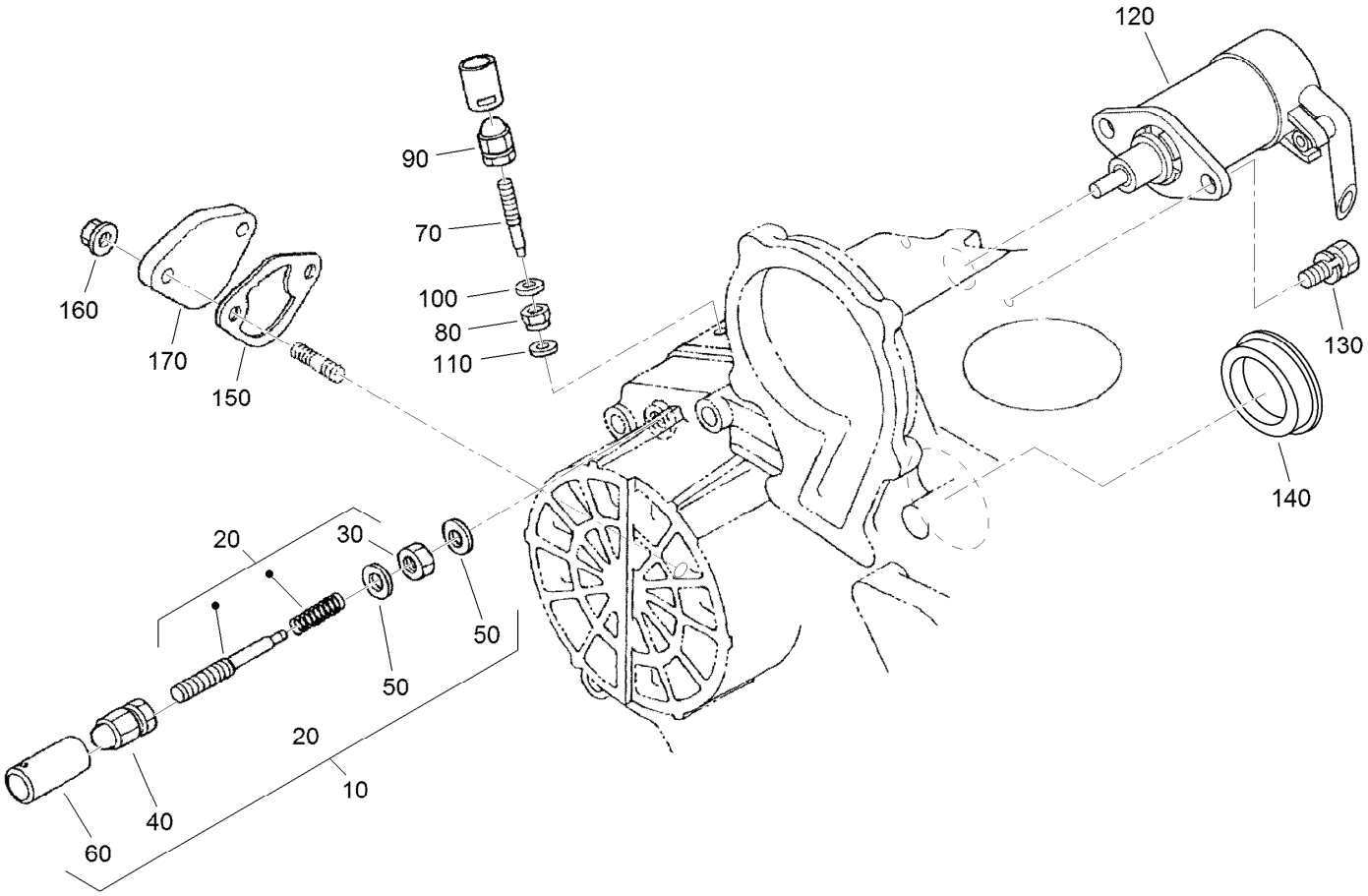

Idle Apparatus and Stop Solenoid Assembly

Ref.	Part Number	Qty.	Description
10	98-9678	1	Idle Apparatus ASM
20	112-7014	1	Adjusting Bolt ASM
30	98-9439	1	Nut
40	112-0181	1	Nut
50	98-7654	2	Gasket
60	98-7656	1	Cap
70	112-7015	1	Bolt-Adjusting
80	100-2175	1	Nut-Lock
90	112-0181	1	Nut

Ref.	Part Number	Qty.	Description
100	98-7654	1	Gasket
110	107-9081	1	Gasket
120	104-5155	1	Solenoid-Stop
130	115-3039	2	Bolt-HSH
140	99-3514	1	Cover
150	117-7562	1	Gasket-Pump, Fuel
160	100-2203	2	Nut-Flange
170	112-7016	1	Cover-Pump

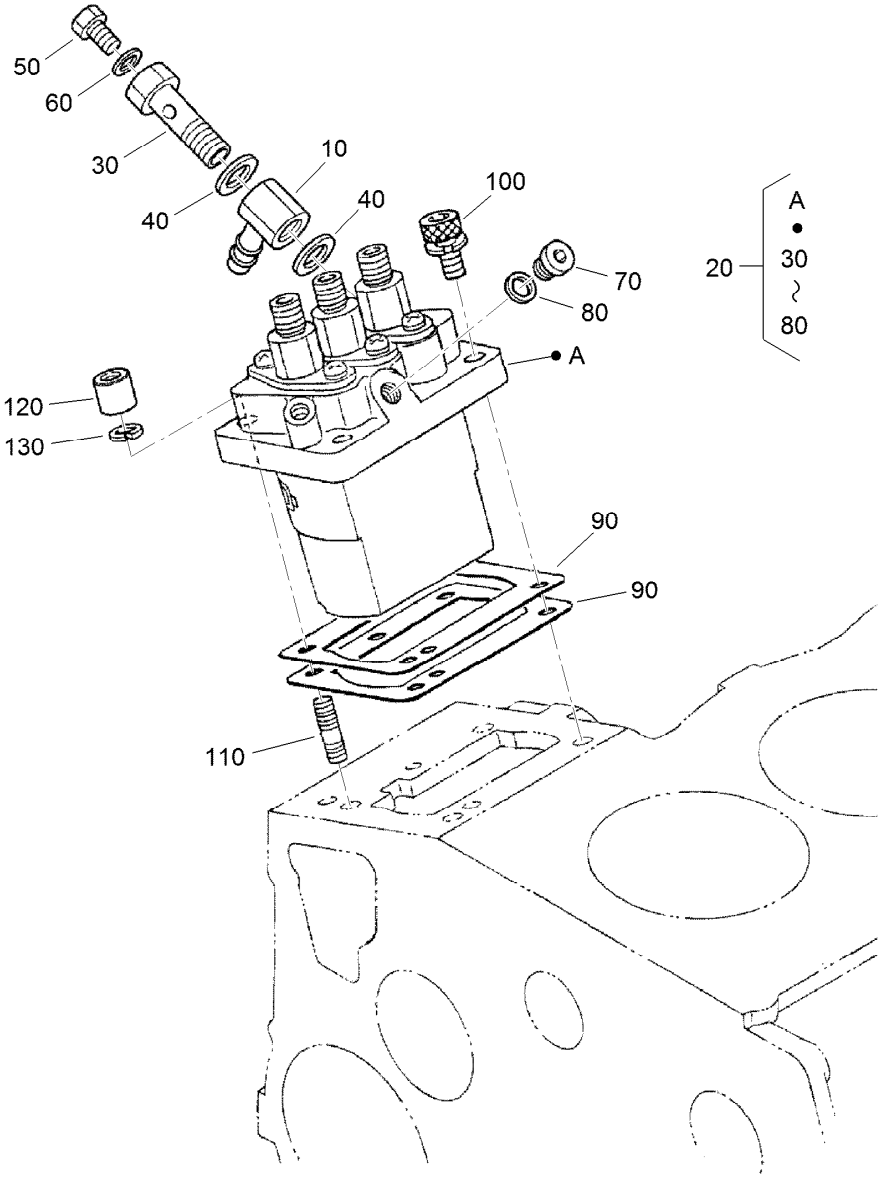

Injection Pump Assembly

Ref.	Part Number	Qty.	Description
10	98-9596	1	Joint-Eye
20	98-9643	1	Injection Pump ASM
30	98-9464	1	Bolt-Joint
40	98-9445	2	Gasket
50	98-9430	1	Screw
60	98-9446	1	Gasket
70	98-9466	1	Plug
80	98-9451	1	Gasket
90	115-3045	1	Shim-Injection (0.175MM)

Ref.	Part Number	Qty.	Description
90	98-9456	1	Shim-Injection (0.20MM)
90	98-9457	1	Shim-Injection (0.25MM)
90	98-9458	1	Shim-Injection (0.30MM)
90	115-3046	1	Shim-Injection (0.35MM)
100	117-7564	2	Bolt-Hex Soc HD
110	98-9438	2	Stud
120	98-9440	2	Nut-Cap
130	98-7699	4	Washer-Spring

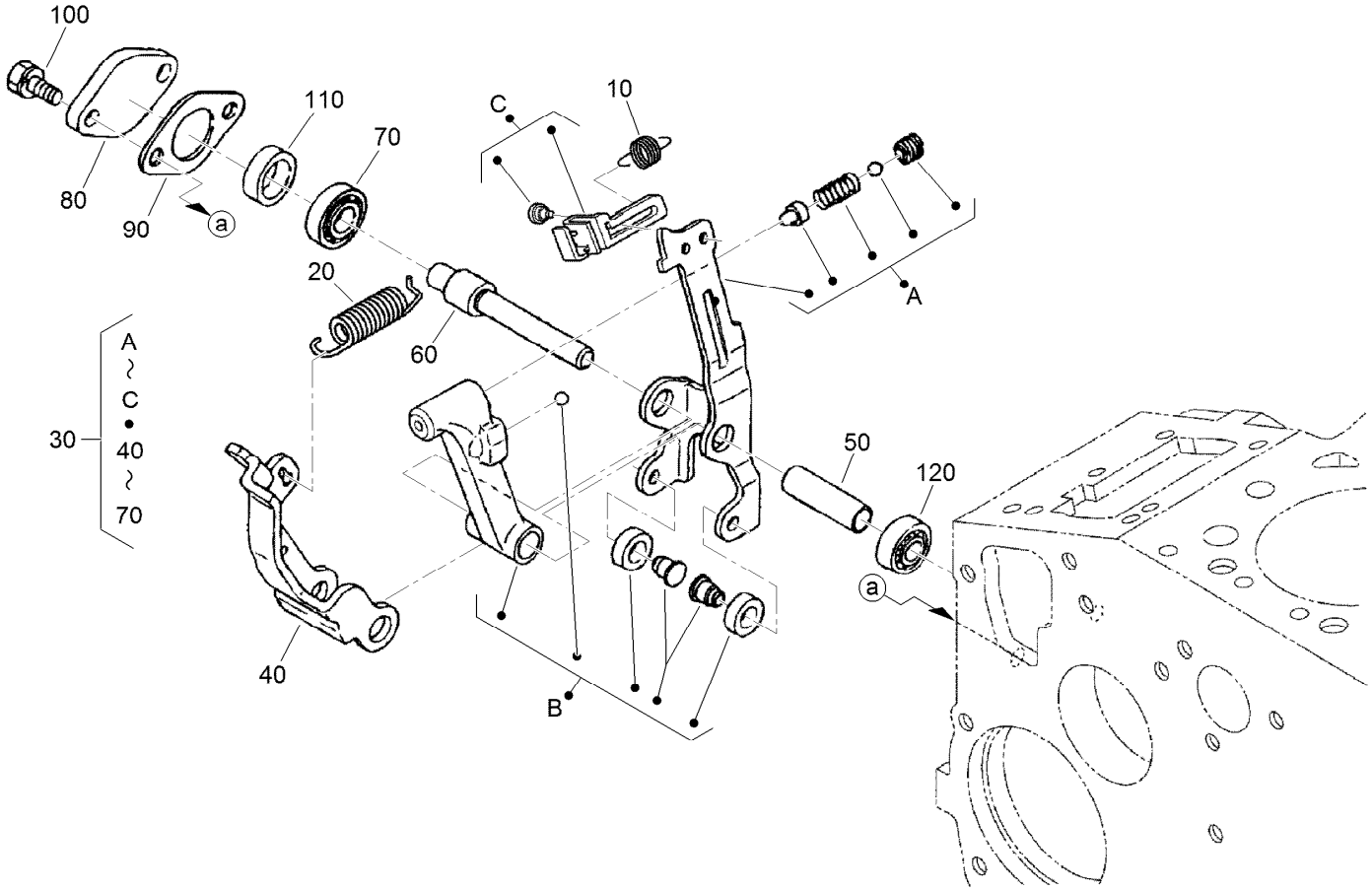

Governor Assembly

Ref.	*Part Number*	*Qty.*	*Description*
10	105-3786	1	Spring-Start
20	98-9681	1	Spring-Governor
30	115-4502	1	Fork Lever ASM
40	107-9084	1	Lever-Fork
50	107-9085	1	Shaft-Lever, Fork
60	107-9086	1	Shaft-Lever, Fork
70	98-9570	1	Bearing-Miniaturize
80	115-4122	1	Cover-Shaft, Fork Lever
90	98-9682	1	Gasket
100	98-9350	2	Bolt
110	98-9567	1	Collar
120	98-9571	1	Bearing-Miniaturize

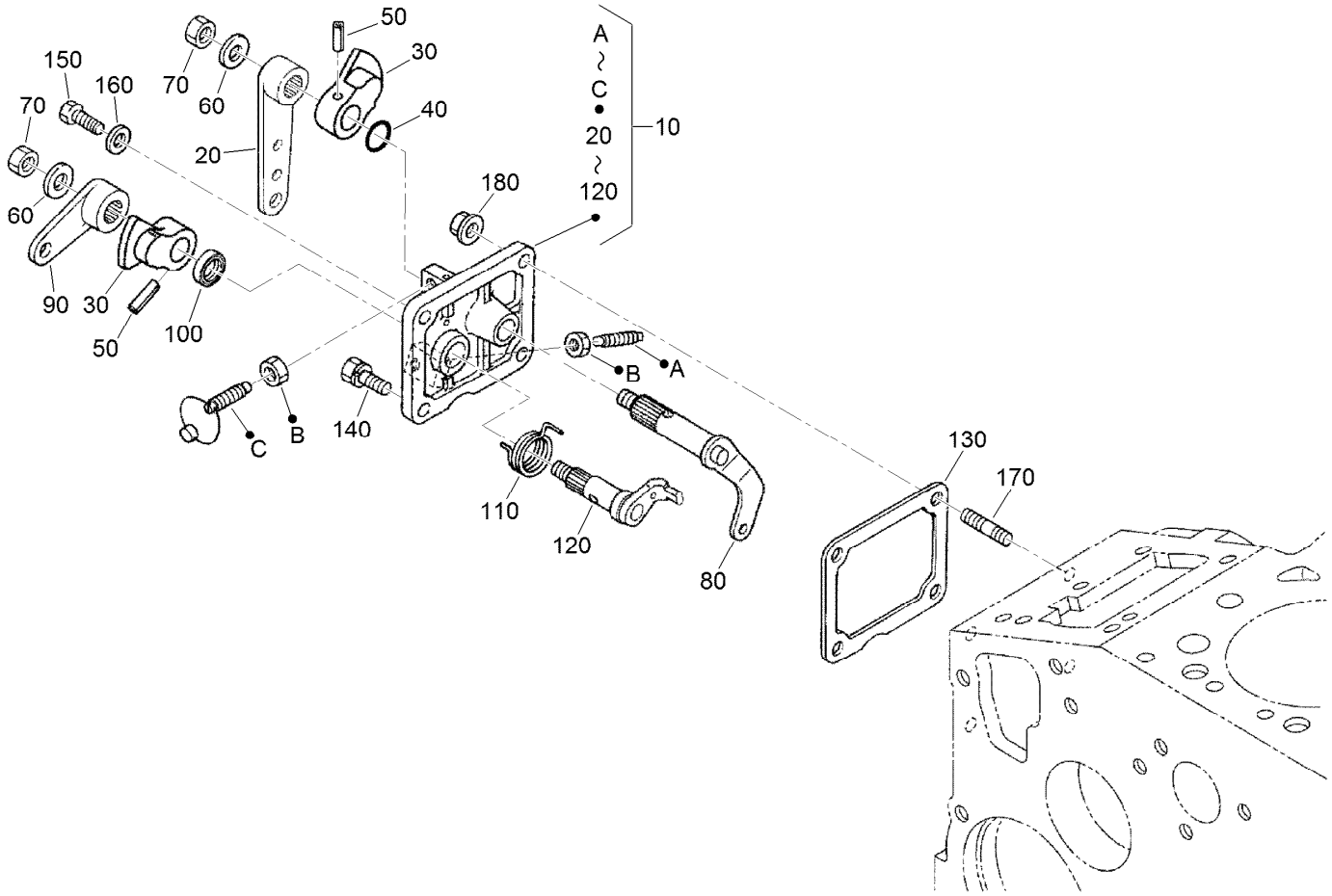

Speed Control Plate Assembly

Ref.	Part Number	Qty.	Description
10	105-3735	1	Control Plate ASM
20	98-9662	1	Lever-Control, Speed
30	98-9572	2	Lever-Control, Speed
40	105-3788	1	O-Ring
50	98-7602	2	Pin-Spring
60	98-9594	2	Washer-Plain
70	98-9589	2	Nut
80	98-9658	1	Governor Lever ASM
90	98-9663	1	Lever-Stop, Engine

Ref.	Part Number	Qty.	Description
100	98-7601	1	Seal-Oil
110	98-9472	1	Spring-Return
120	98-9664	1	Shaft-Lever, Stop
130	98-9637	1	Gasket
140	98-7692	1	Bolt
150	99-8348	1	Bolt
160	98-7654	1	Gasket
170	105-3710	2	Stud
180	100-2203	2	Nut-Flange

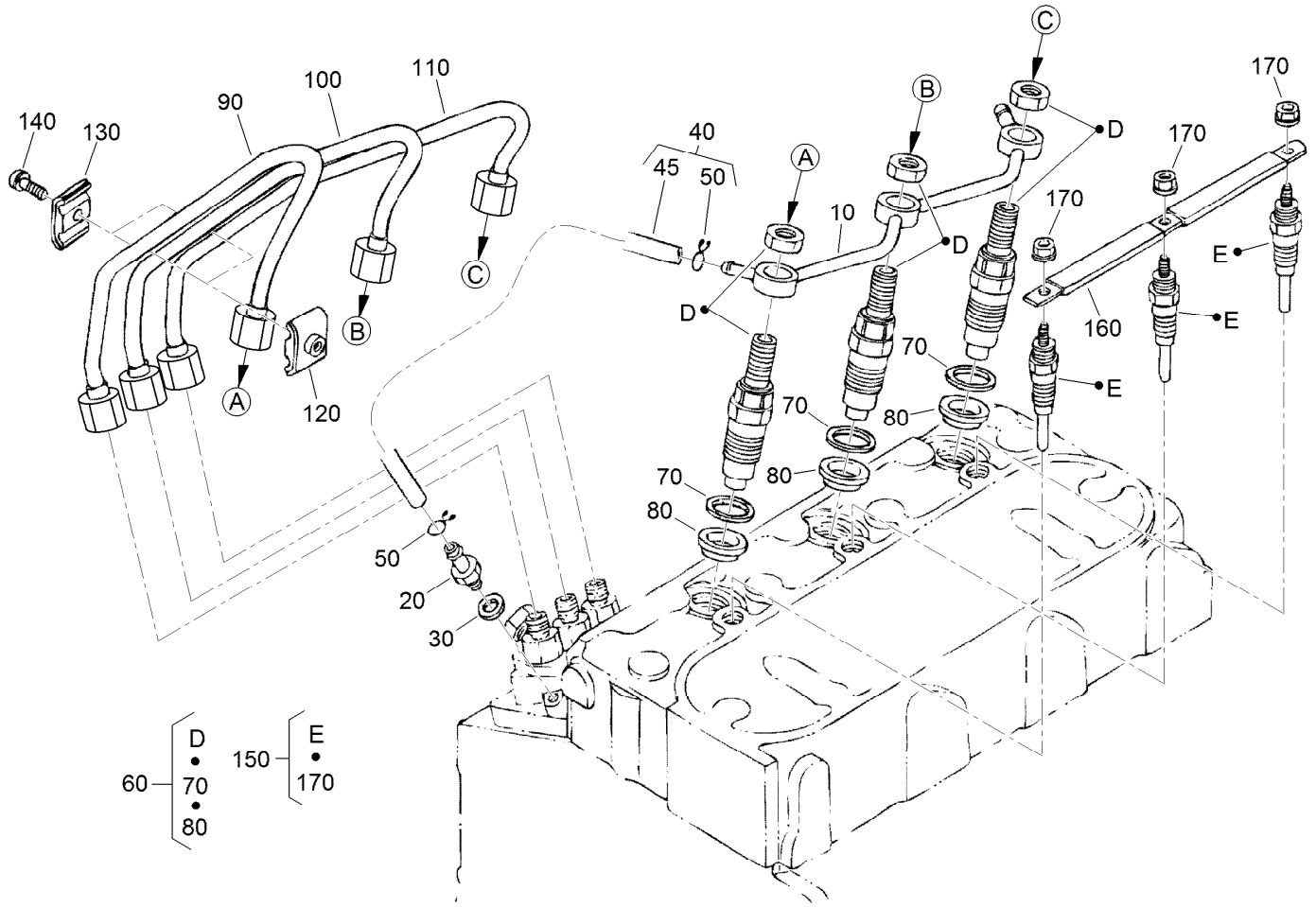

Nozzle Holder and Glow Plug Assembly

Ref.	Part Number	Qty.	Description
10	98-9620	1	Overflow Pipe ASM
20	98-9431	1	Screw-Bleeder, Air
30	98-7654	1	Gasket
40	98-9420	1	Overflow Pipe ASM
45	112-0182	1	Pipe-Overflow
50	98-7671	2	Clip-Pipe
60	108-2866	3	Nozzle Holder Kit
70	98-7676	3	Gasket
80	98-7677	3	Seal-Heat

Ref.	Part Number	Qty.	Description
90	98-9622	1	Pipe-Injection
100	98-9654	1	Pipe-Injection
110	98-9655	1	Pipe-Injection
120	98-7682	2	Clamp-Pipe
130	98-7683	2	Clamp-Pipe
140	98-7684	2	Screw (W/Washer)
150	115-3019	3	Plug-Glow
160	98-9631	3	Cord-Plug, Glow
170	99-8377	1	Nut-Flange

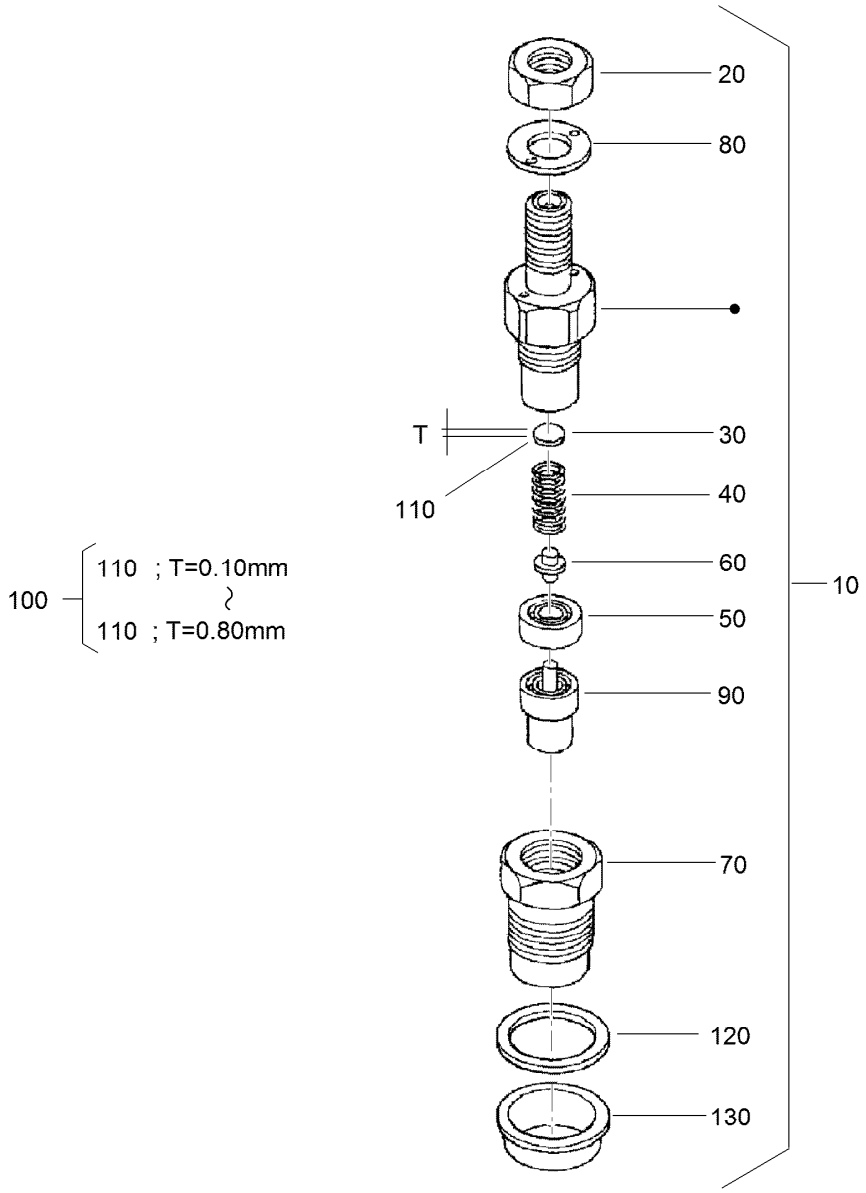

Nozzle Holder Assembly

Ref.	Part Number	Qty.	Description
10	108-2866	3	Nozzle Holder Kit
20	99-8301	3	Nut
30	99-8302	3	Washer-Adjusting
40	99-8303	3	Spring-Nozzle
50	99-8304	3	Spacer-Distance
60	99-8305	3	Rod-Push
70	99-8306	3	Nut-Nozzle
80	99-8307	3	Washer-Plain
90	107-7826	3	Piece-Nozzle
100	99-8309	3	Adjusting Washer ASM
110	99-8310	3	Washer-Adjust (0.10MM)

Ref.	Part Number	Qty.	Description
110	99-8311	3	Washer-Adjust (0.20MM)
110	99-8312	3	Washer-Adjust (0.30MM)
110	99-8313	3	Washer-Adjust (0.40MM)
110	99-8314	3	Washer-Adjust (0.50MM)
110	99-8315	3	Washer-Adjust (0.52MM)
110	99-8316	3	Washer-Adjust (0.54MM)
110	99-8317	3	Washer-Adjust (0.56MM)
110	99-8318	3	Washer-Adjust (0.58MM)
110	99-8319	3	Washer-Adjust (0.80MM)
120	98-7676	3	Gasket
130	98-7677	3	Seal-Heat

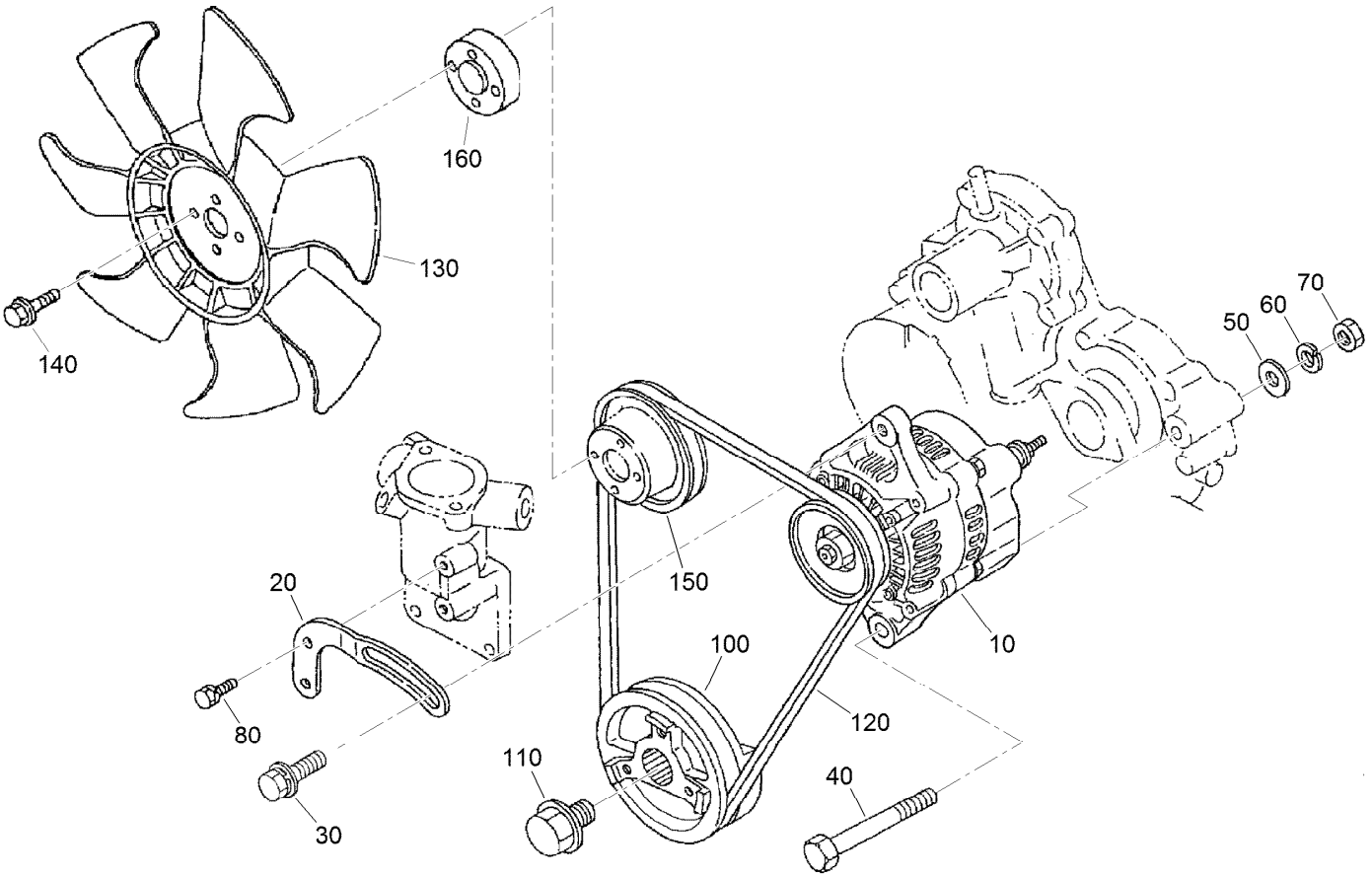

Alternator and Pulley Assembly

Ref.	Part Number	Qty.	Description
10	98-9474	1	Alternator ASM
20	112-7047	1	Stay-Dynamo
30	108-7088	1	Bolt
40	98-9360	1	Bolt
50	98-9366	1	Washer-Plain
60	98-7738	1	Washer-Spring
70	98-7737	1	Nut
80	98-7692	1	Bolt
100	98-9473	1	Pulley-Drive, Fan
110	98-9585	1	Bolt
120	104-3494	1	Belt-V
130	107-9096	1	Fan-Cooling
140	108-2873	4	Bolt-Flange
150	104-3497	1	Pulley-Fan
160	108-2872	1	Collar-Fan

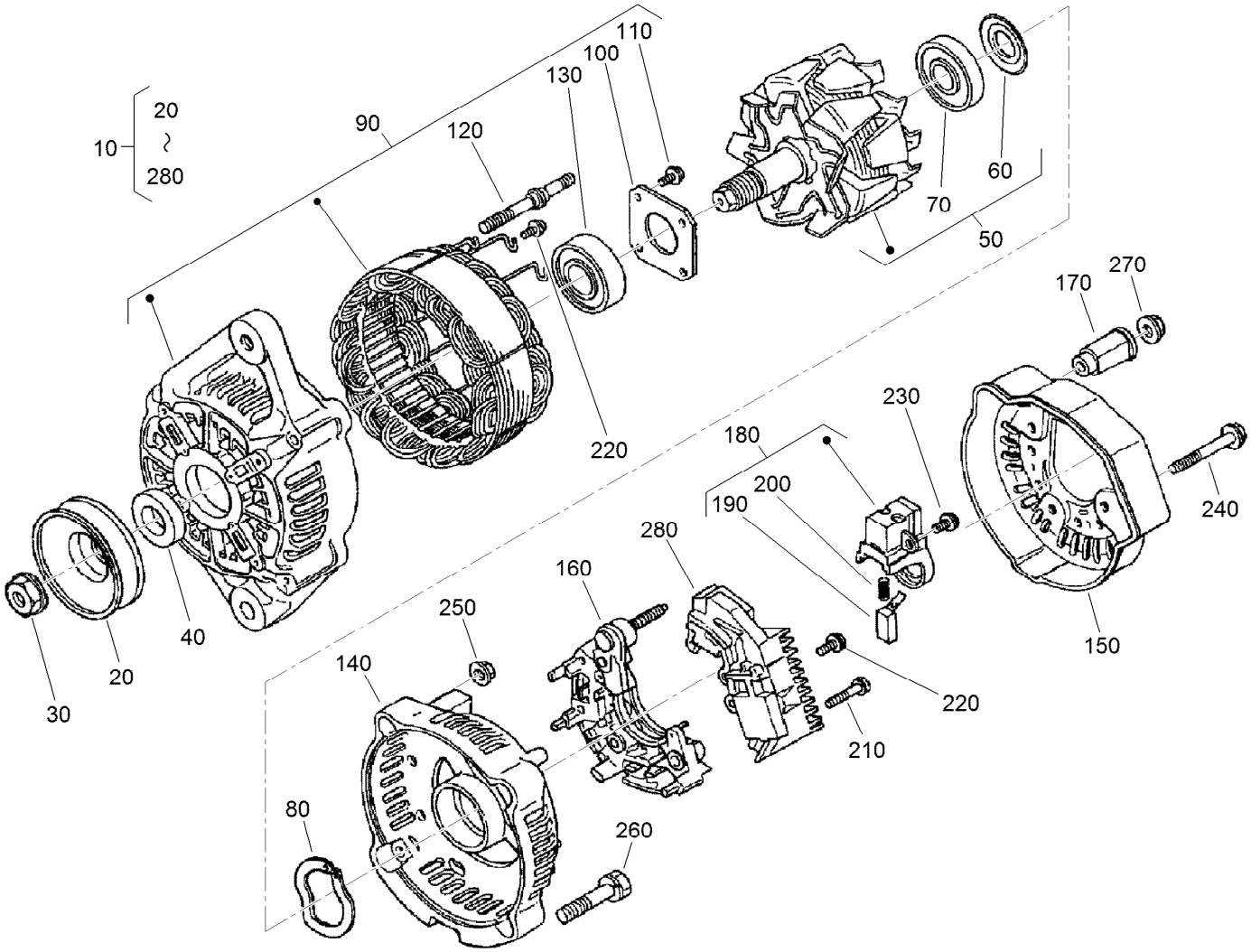

Alternator Components Assembly

Ref.	Part Number	Qty.	Description
10	98-9474	1	Alternator ASM
20	98-9453	1	Pulley-Dynamo
30	98-7708	1	Nut
40	98-7709	1	Collar
50	107-0136	1	Rotor ASM
60	98-7711	1	Cover-Bearing
70	107-0138	1	Bearing-Ball
80	98-7713	1	Washer-Thrust
90	107-0139	1	Drive End Frame ASM
100	98-7715	1	Plate-Retainer
110	98-7716	4	Screw-Head, Round
120	98-7717	2	Bolt-Through
130	107-0137	1	Bearing-Ball
140	107-9087	1	Frame-End

Ref.	Part Number	Qty.	Description
150	107-0140	1	Cover-End
160	98-7721	1	Rectifier ASM
170	98-7722	1	Bushing-Insulation
180	107-0141	1	Brush Holder ASM
190	98-7724	2	Brush
200	98-7725	2	Spring-Brush
210	98-7726	2	Screw-Head, Round
220	98-7727	6	Screw-Head, Round
230	98-7728	1	Screw-Head, Round
240	98-7729	3	Bolt
250	98-7730	2	Nut
260	98-7731	2	Bolt
270	98-7732	1	Nut
280	110-3799	1	Regulator ASM

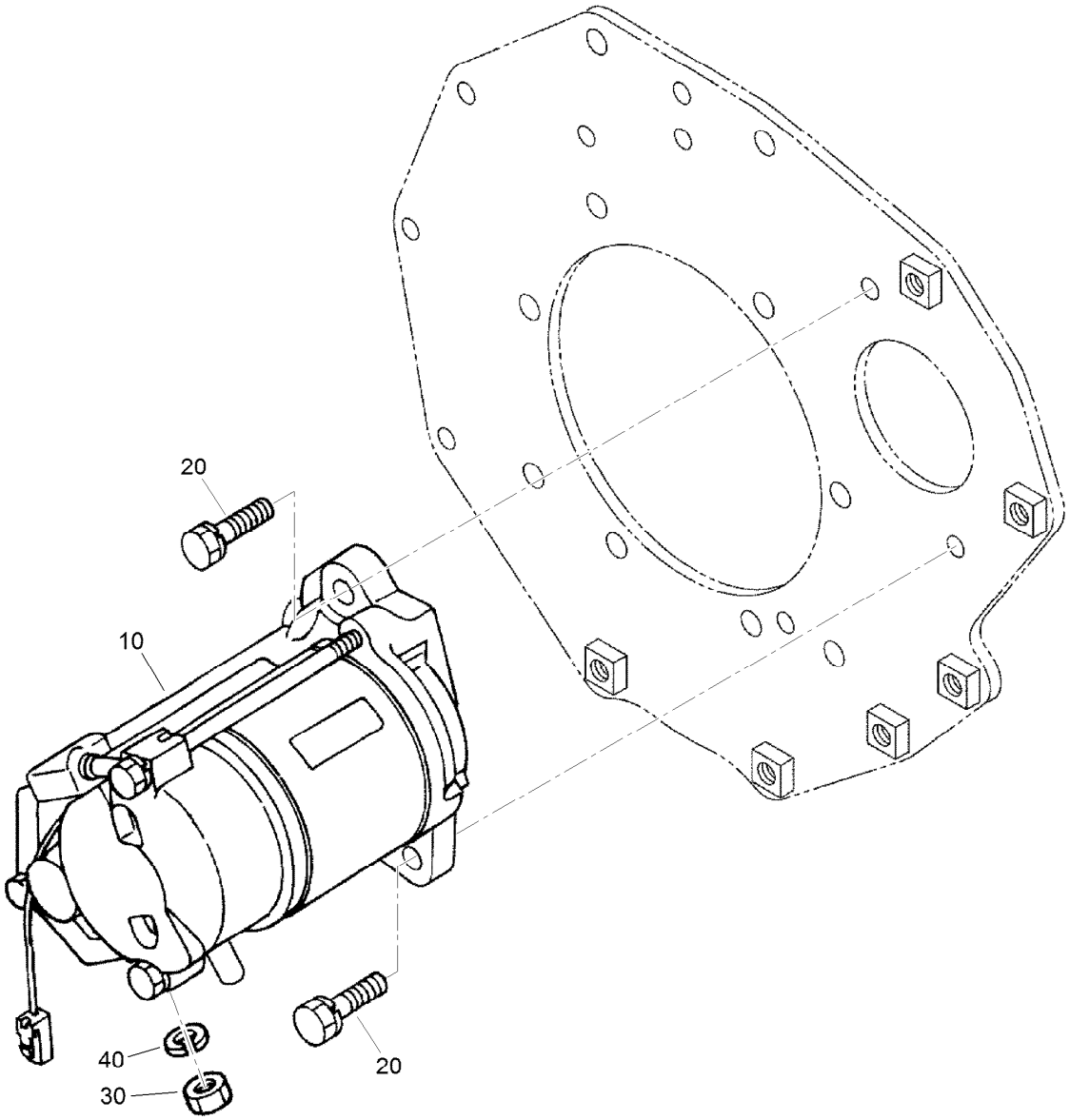

Starter Assembly

Ref.	Part Number	Qty.	Description
10	98-9705	1	Starter ASM
20	98-7697	2	Bolt
30	98-7739	1	Nut
40	105-2893	1	Washer-Spring

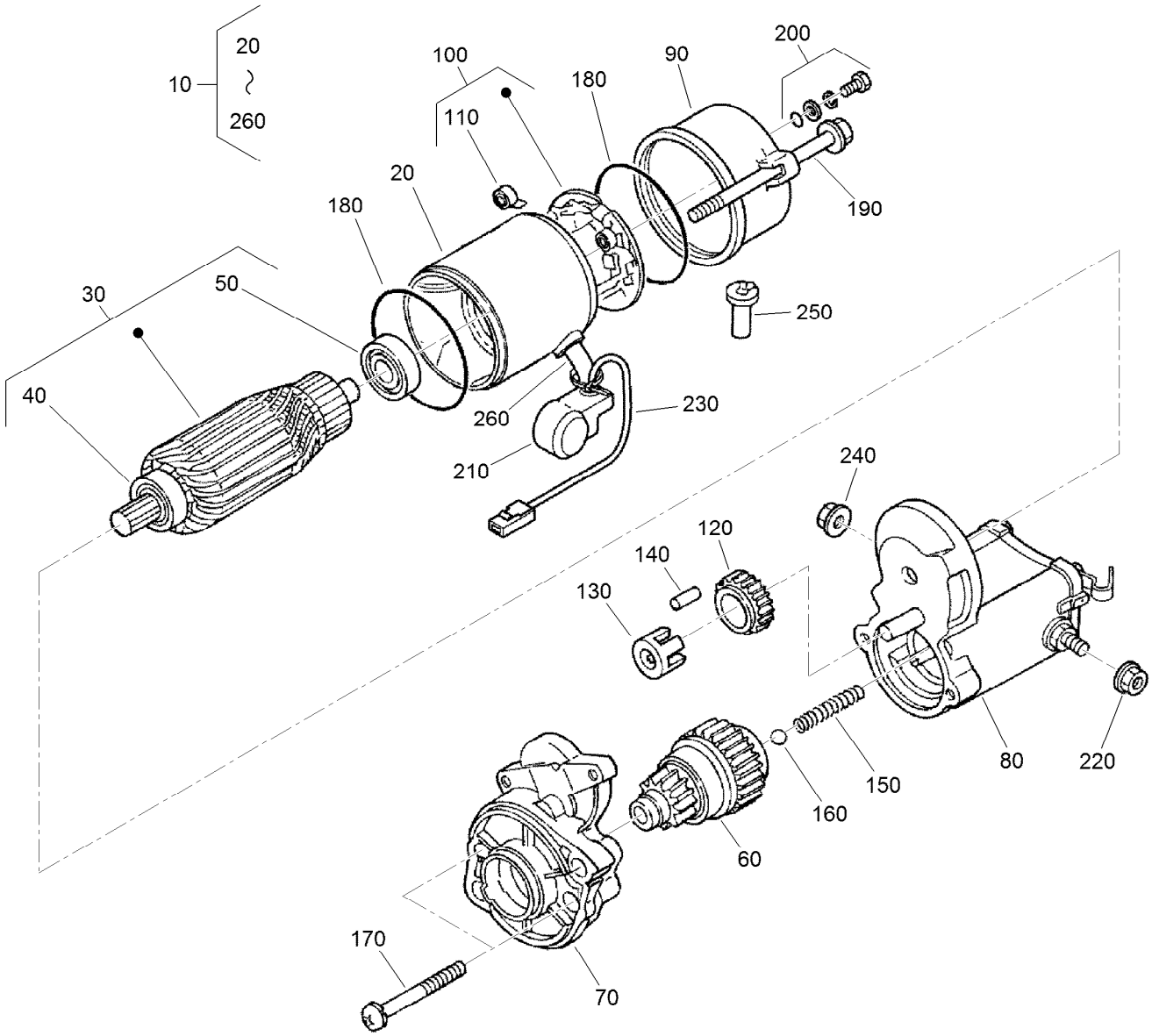

Starter Component Assembly

Ref.	Part Number	Qty.	Description
10	98-9705	1	Starter ASM
20	104-8608	1	Yoke ASM
30	98-7742	1	Armature ASM
40	98-7744	1	Bearing
50	98-7743	1	Bearing
60	99-8373	1	Clutch-Running, Over
70	99-8374	1	Frame-End, Drive
80	105-3746	1	Magnetic Switch ASM
90	98-7748	1	Frame-End
100	98-7749	1	Brush Holder ASM
110	98-7750	4	Spring-Brush
120	98-7751	1	Gear
130	98-7752	1	Retainer

Ref.	Part Number	Qty.	Description
140	98-7753	5	Roller
150	98-7754	1	Spring
160	98-7755	1	Ball
170	98-7756	2	Bolt
180	98-7757	2	O-Ring
190	100-9240	2	Bolt
200	98-7758	2	Bolt ASM
210	99-8375	1	Cover
220	99-8371	1	Nut-Hex
230	98-9711	1	Cord-Solenoid, Stop
240	99-8376	1	Nut-Hex
250	98-7759	1	Pipe-Drain
260	98-9712	1	Band-Cover

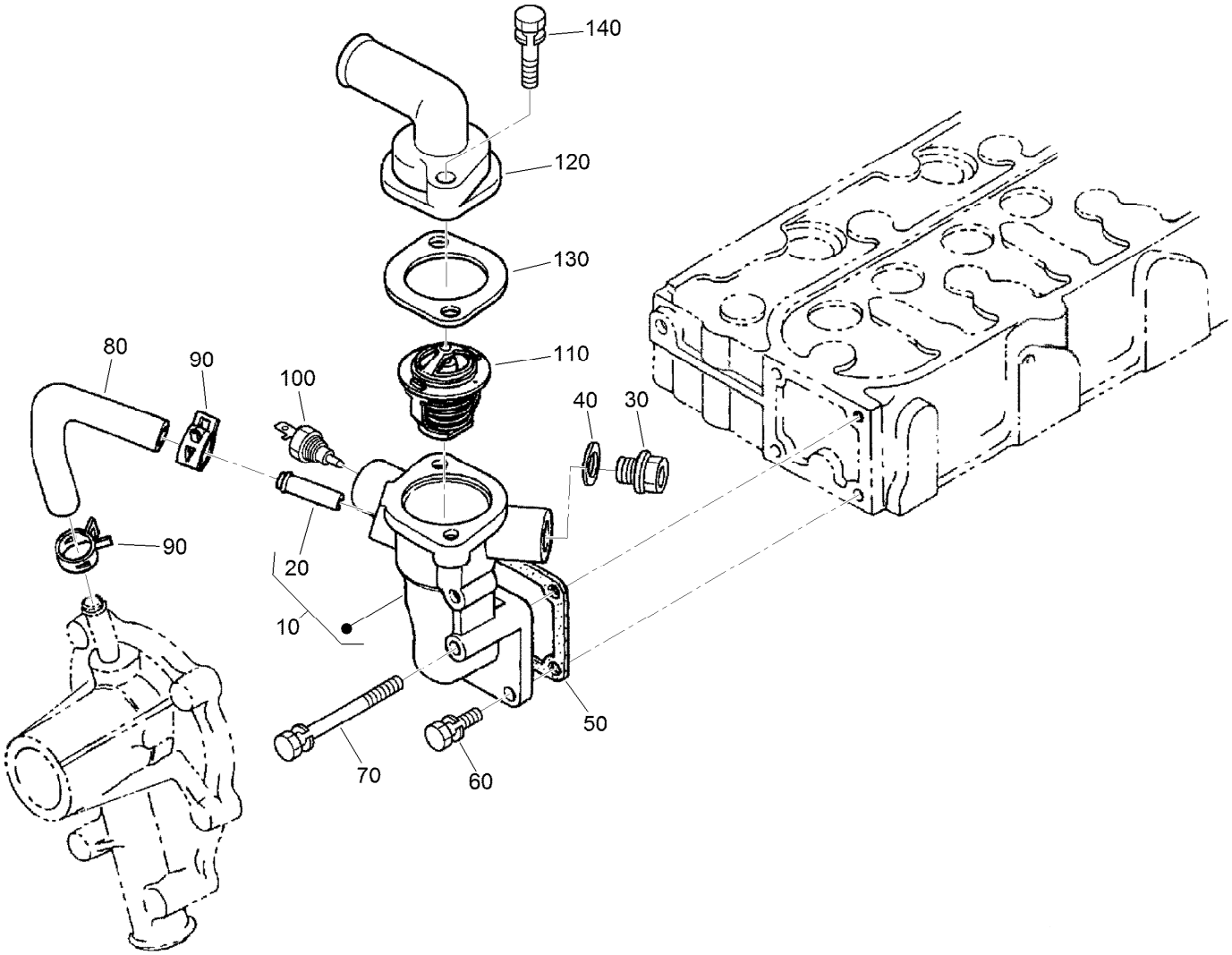

Water Flange and Thermostat Assembly

Ref.	Part Number	Qty.	Description
10	98-9713	1	Water Flange ASM
20	98-9580	1	Pipe-Return, Water
30	105-3747	1	Plug
40	99-3583	1	Gasket
50	98-9638	1	Gasket-Flange, Water
60	98-7692	3	Bolt
70	98-9356	1	Bolt
80	98-9578	1	Pipe-Return, Water
90	98-9579	2	Band-Pipe
100	98-9719	1	Thermoswitch
110	98-7778	1	Thermostat ASM
120	104-4804	1	Outlet-Water
130	105-3748	1	Gasket-Thermostat
140	98-7777	2	Bolt

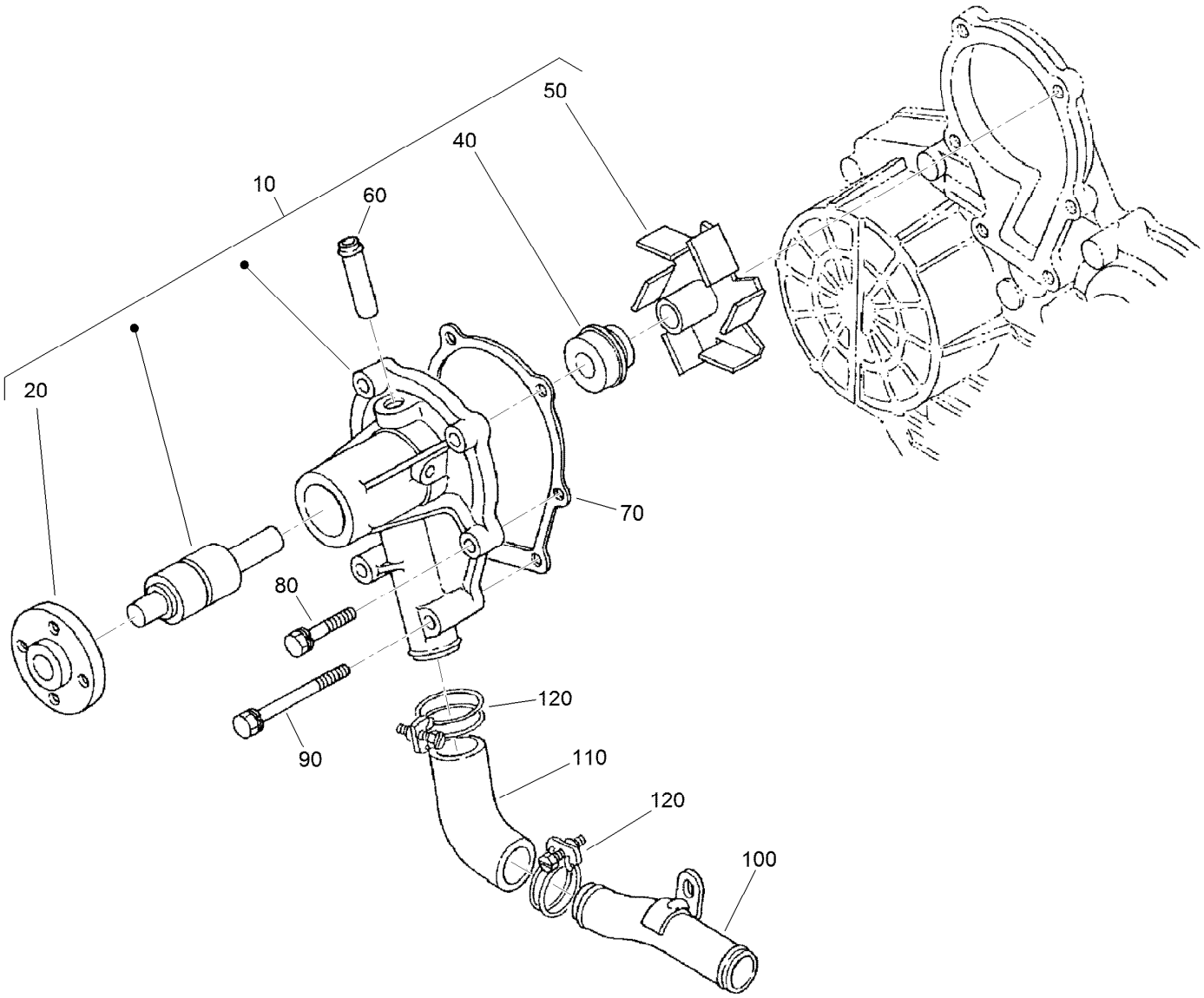

Water Pump Assembly

Ref.	*Part Number*	*Qty.*	*Description*
10	107-9089	1	Water Pump ASM
20	99-3516	1	Flange-Pump, Water
40	105-3750	1	Mechanical Seal ASM
50	112-7017	1	Impeller-Pump, Water
60	100-1932	1	Pipe-Return, Water
70	99-3454	1	Gasket-Pump, Water
80	98-9353	4	Bolt
90	98-9357	2	Bolt
100	98-9716	1	Pipe-Water
110	107-9091	1	Pipe-Water
120	98-9717	2	Clamp

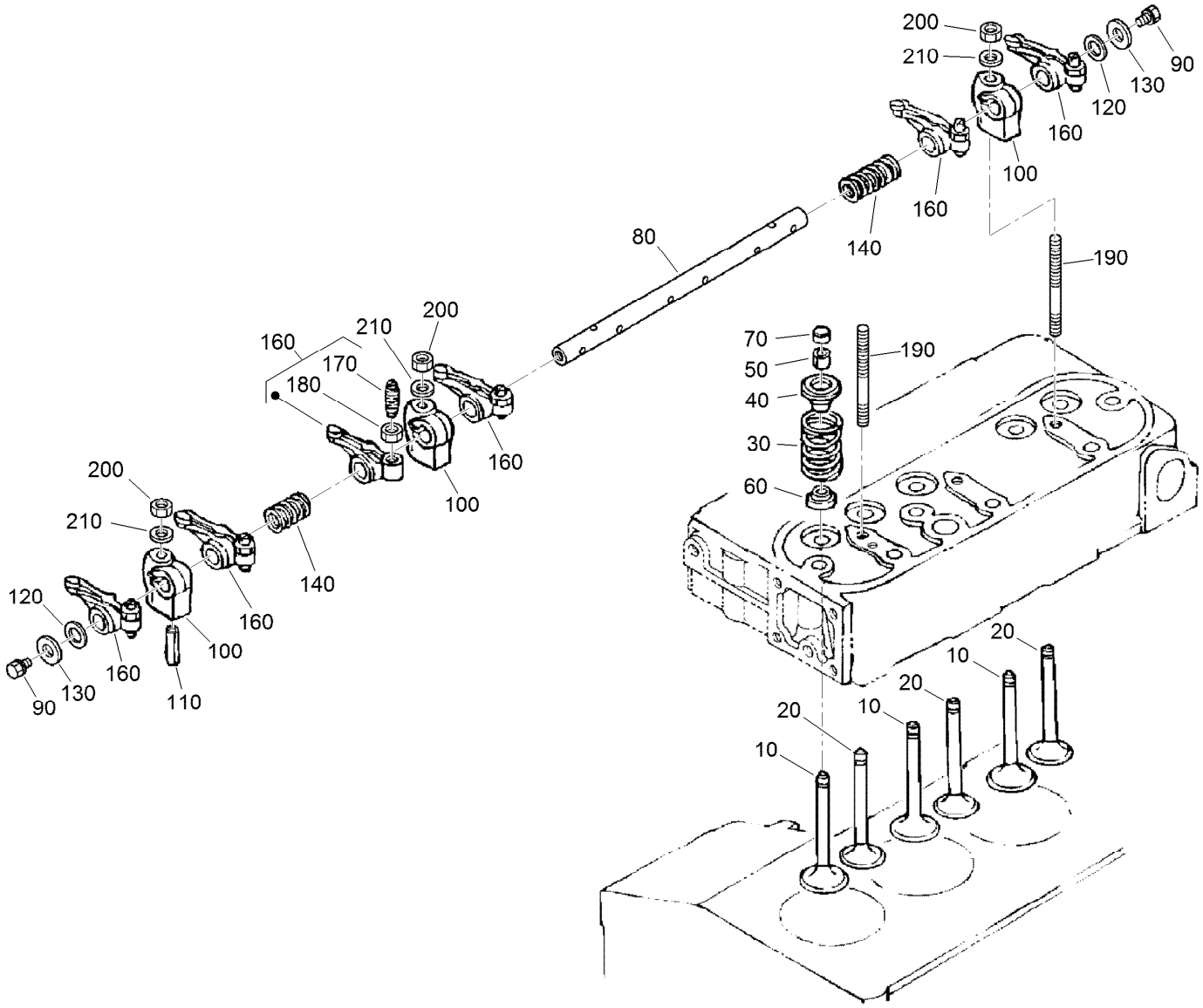

Valve and Rocker Arm Assembly

Ref.	Part Number	Qty.	Description
10	120-2563	3	Valve-Inlet
20	120-2564	3	Valve-Exhaust
30	98-9648	6	Spring-Valve
40	107-9092	6	Retainer-Spring
50	117-7572	6	Collet-Spring, Valve
60	99-8385	6	Seal-Stem, Valve
70	98-9497	6	Cap-Valve
80	105-3790	1	R-Arm Shaft ASM
90	100-9265	2	Bolt
100	98-9505	3	Bracket-Arm, Rocker

Ref.	Part Number	Qty.	Description
110	105-3758	1	Pin-Spring
120	98-9507	2	Washer-Shaft, Rocker Arm
130	110-3832	2	Washer-Plain
140	98-9504	2	Spring-Arm, Rocker
160	112-7020	6	Rocker Arm ASM
170	98-9502	6	Screw-Adjusting
180	98-9503	6	Nut
190	98-9506	3	Stud
200	98-9393	3	Nut
210	98-9385	3	Washer-Flat

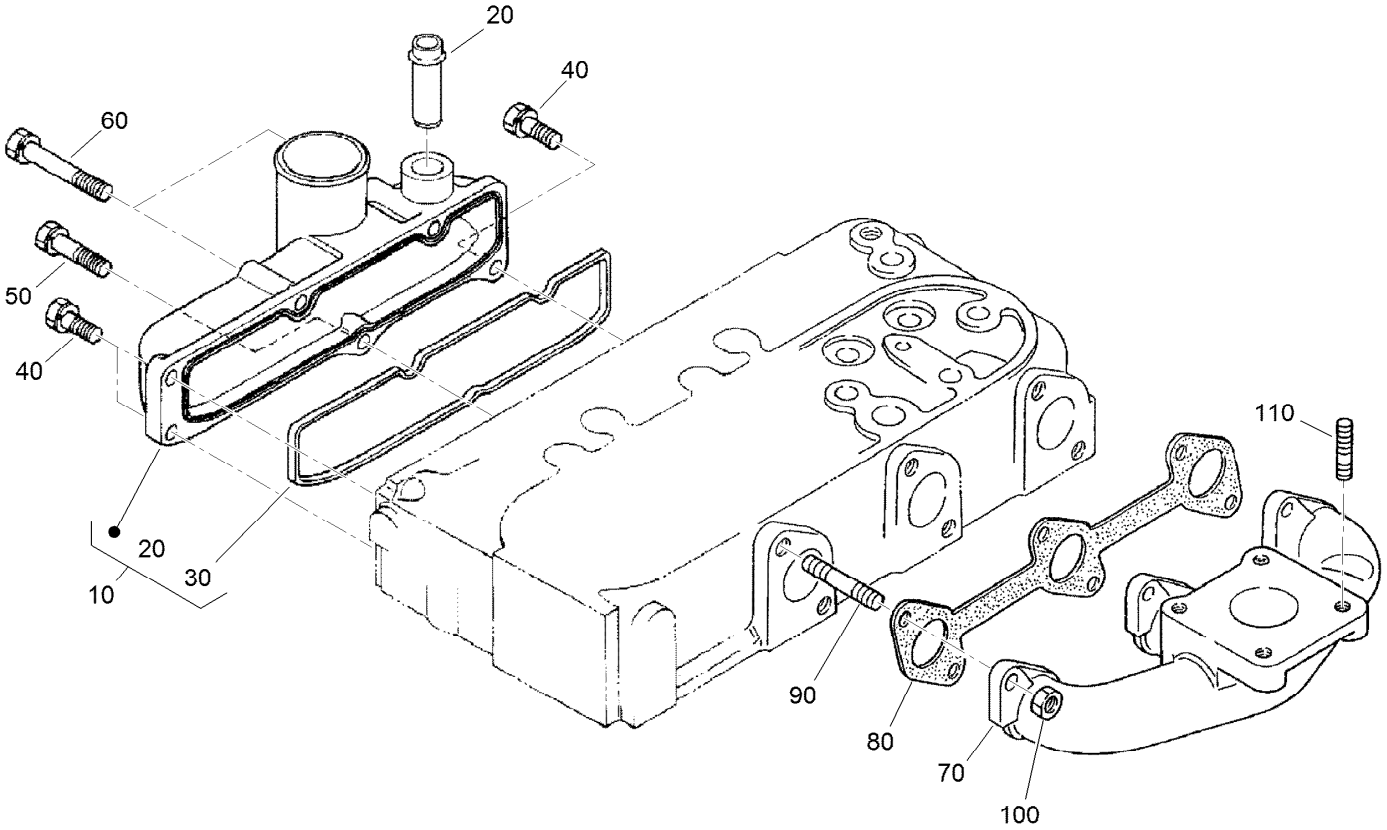

Inlet and Exhaust Manifold Assembly

Ref.	*Part Number*	*Qty.*	*Description*
10	107-7843	1	Manifold Inlet ASM
20	98-9492	1	Joint-Pipe, Breather
30	98-9609	1	Gasket-Manifold, Inlet
40	98-7605	3	Bolt
50	98-9353	1	Bolt
60	105-3797	2	Bolt
70	107-9093	1	Manifold-Exhaust
80	99-8327	1	Gasket-Manifold, Exhaust
90	98-9588	6	Stud
100	98-9665	6	Nut
110	98-7769	4	Stud

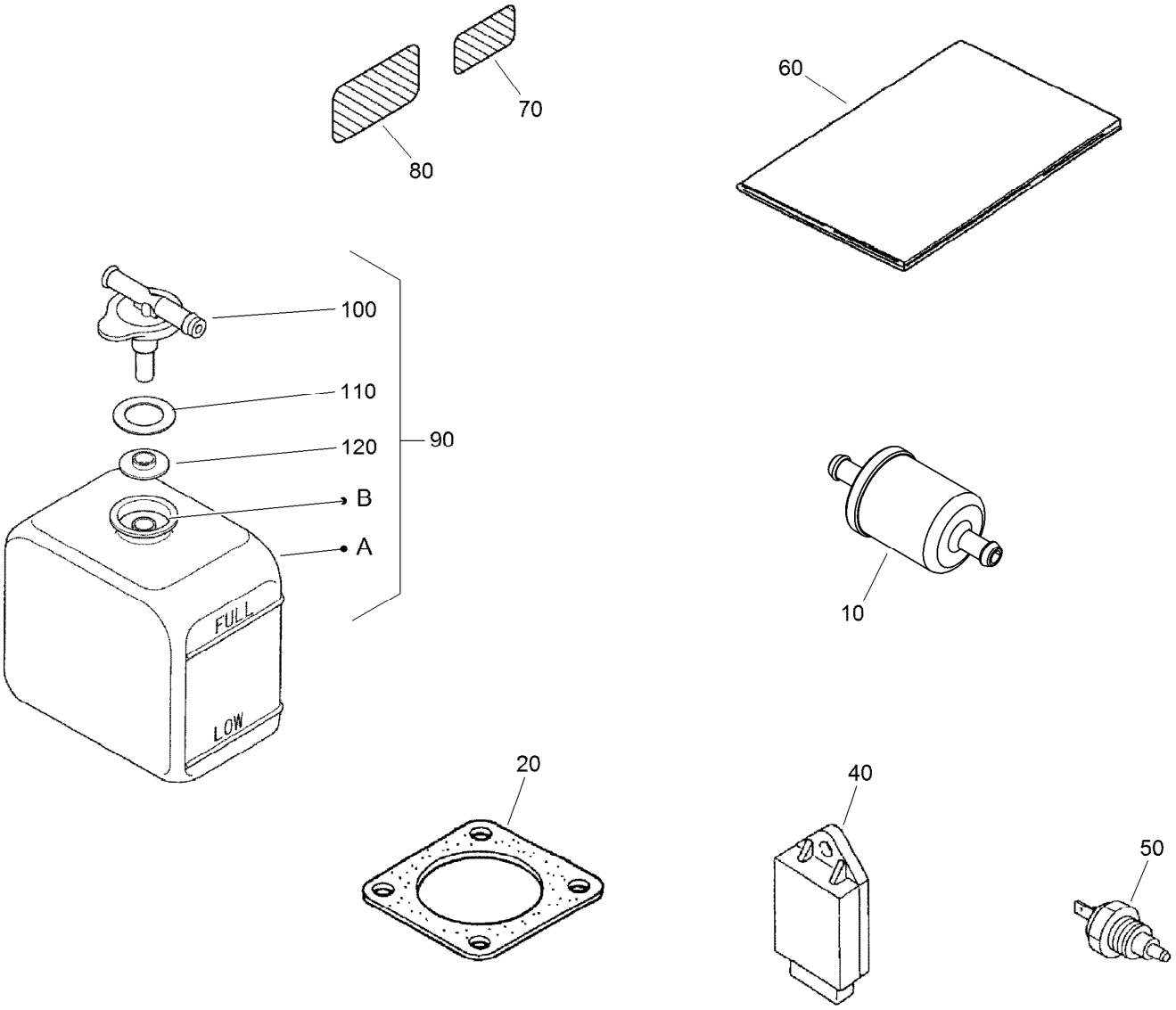

Miscellaneous Engine Parts

Ref.	*Part Number*	*Qty.*	*Description*
10	98-7612	1	Filter-Fuel
20	99-8343	1	Gasket-Muffler
40	98-7611	1	Controller-Glow
50	106-7772	1	Thermoswitch
60	117-8836	1	Manual-Operator, Kubota
70	110-0806	1	Decal-Caution
80	110-3843	1	Label-Instruction
90	104-9318	1	Bottle-Overflow
100	115-4132	1	Cap
110	105-3755	1	Gasket
120	105-3756	1	Plate

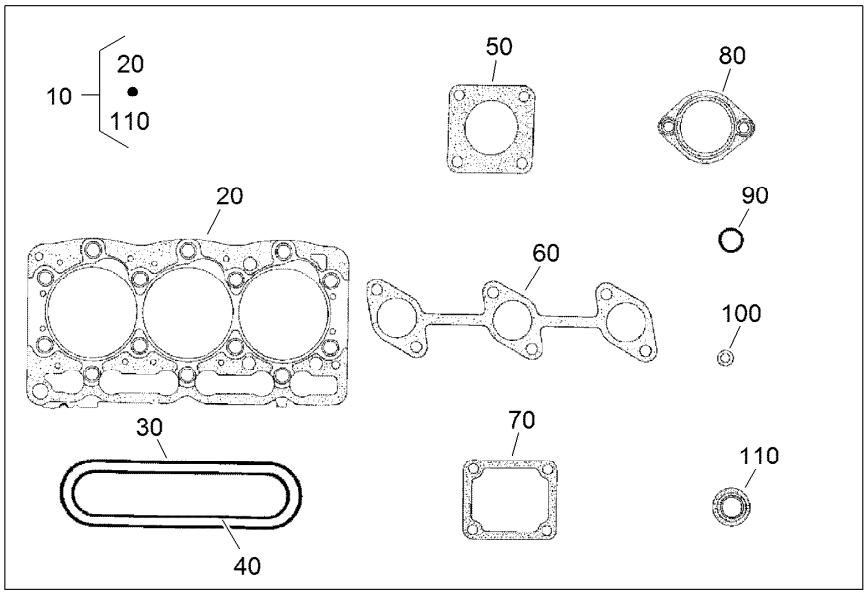

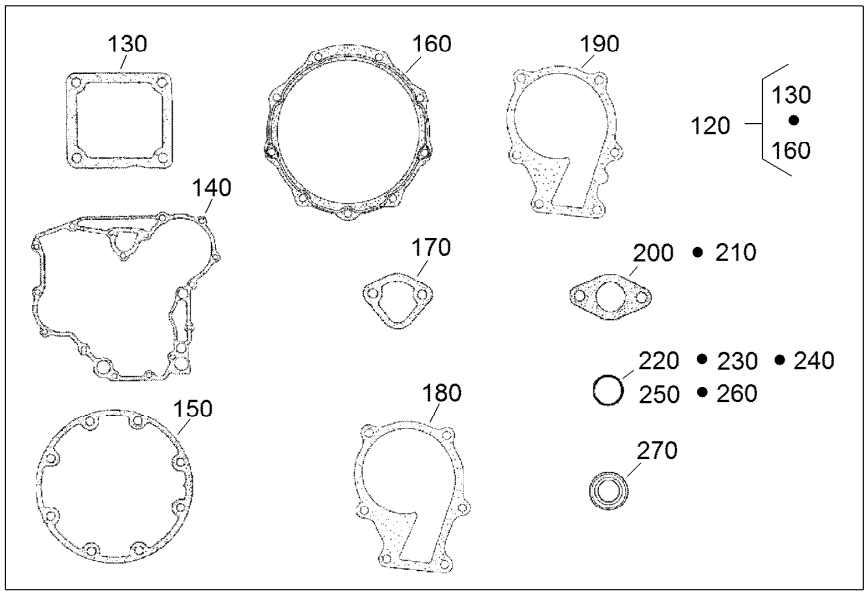

Upper and Lower Gasket Kits

Ref.	Part Number	Qty.	Description
10	107-7848	1	Upper Gasket Kit
20	108-6573	1	Gasket-Head, Cylinder
30	98-9615	1	Gasket-Cover, Head
40	98-9609	1	Gasket-Manifold, Inlet
50	99-8343	1	Gasket-Muffler
60	99-8327	1	Gasket-Manifold, Exhaust
70	98-9638	1	Gasket-Flange, Water
80	105-3748	1	Gasket-Thermostat
90	99-3446	2	O-Ring
100	98-9454	3	Gasket
110	99-8385	6	Seal-Stem, Valve
120	107-9095	1	Lower Gasket Kit
130	98-9637	1	Gasket
140	98-9633	1	Gasket-Case, Gear

Ref.	Part Number	Qty.	Description
150	98-9634	1	Gasket-Case, Bearing
160	112-7037	1	Gasket-Cover, Case
170	98-9636	1	Gasket-Pump, Fuel
180	98-9632	1	Gasket-Pump, Water
190	99-3454	1	Gasket-Pump, Water
200	98-9682	1	Gasket
210	98-9683	1	Gasket-Cover, Solenoid
220	105-3781	2	O-Ring
230	105-3777	2	O-Ring
240	105-3783	1	O-Ring
250	105-3776	1	O-Ring
260	105-3788	1	O-Ring
270	98-7601	1	Seal-Oil

Attachments and Accessories

For 30849 Groundsmaster 3505-D Traction Unit

Product Name	Model/Part
Blade-High Lift	104-5183
Blade-Angle Sail	105-9810-03
Blade-Atomic	107-0235-03
27in Blade Service Pack (qty 6)	108-1462
Blade-Combo	108-9026-03
Sectional Roller Assembly	117-5121
400-hour Filter Maintenance MVP Kit	30058
400-hour Filter Maintenance MVP Kit	30090
Premium Seat Kit	30629
27in Rotary Cutting Unit	30834
Leaf Mulching Kit	30836
Work Light Kit	30841

Notes:

Notes:

TORO®

Count on it.