Form No. 3384-270 Rev D

TORO®

Count on it.

Parts Catalog

# Groundsmaster® 3505-D Rotary Mower

**Model No. 30849—Serial No. 314000001 and Up**

Register at www.Toro.com.
Original Instructions (EN)

CE

*3384-270* D

# Ordering Replacement Parts

To order replacement parts, please supply the part number, the quantity, and the description of each part desired.

### Understanding Reference Numbers

Each identified part in an illustration has a reference number. The reference number for a part also appears in the parts list, along with other information about the part.

This catalog uses two special reference number formats, one to indicate parts in a service assembly and another to indicate the quantity of a given part in an illustration.

### Service Assembly Reference Numbers

Parts in service assemblies have reference numbers in the form a:b. The a represents the reference number of the entire service assembly and the b represents a sequential number unique to each part within the service assembly.

For example, a wheel assembly might be identified by reference number 6, the tire by 6:1, the valve by 6:2, and the wheel by 6:3. When you order the assembly identified by reference number 6, you receive all parts identified by reference numbers 6:1,6:2, and 6:3. However, you may also order any part individually. Reference numbers of this type appear in illustration and in parts lists.

### Reference Numbers Indicating Quantity

In an illustration, if a reference number indicates more than one part, the reference number has the form nX y. The n represents the quantity of the part, the X is the multiplication symbol, and the y represents the reference number.

For example, in an illustration, the reference number 2X 37 means that two of the parts identified by reference number 37 are indicated.

# Contents


Frame Assembly . . . 5
Front Wheel and Brake Assembly . . . 6
Hydraulic Motor Assembly No. 110-8785 . . . 8
Hydraulic Motor Assembly No. 110-8786 . . . 9
Brake Assembly No. 104-7705 . . . 10
Steering Column Assembly . . . 11
Steering Valve Assembly No. 104-5180 . . . 12
Rear Fork and Tire Assembly . . . 13
Hydraulic Cylinder Assembly No. 94-8141 . . . 15
Control Panel Assembly . . . 16
Front Platform Assembly . . . 17
Traction Pedal Assembly . . . 18
Control Valve Assembly . . . 19
Single Spool Control Valve Assembly No. 95-8689 . . . 20
Rear Lift Arm Assembly . . . 21
Hydraulic Cylinder Assembly No. 112-9916 . . . 23
Neutral Arm Assembly . . . 24
Engine Assembly . . . 25
Air Cleaner and Muffler Assembly . . . 27
Air Cleaner Assembly No. 93-2190 . . . 28
Radiator Assembly . . . 29
Hood Assembly . . . 30
Fuel System Assembly . . . 31
Manifold Block Installation Assembly . . . 33
Hydraulic Manifold Assembly No. 121-3570 . . . 34
Hydraulic Tank Assembly . . . 35
Hydrostat Assembly . . . 36
Hydraulic Pump Assembly No. 104-4890 . . . 38
Hydraulic Gear Pump Assembly No. 108-9036 . . . 40
Carrier Assembly . . . 41
Seat Mounting Assembly . . . 43
Rotary Motor and Cutting Unit Assembly . . . 44
Gear Motor Assembly No. 117-5141 . . . 45
Roller and Carrier Frame Assembly . . . 46
Roller Assembly No. 112-5265 . . . 47
Height-of-Cut Bracket Assembly . . . 48
Chamber, Blade and Spindle Assembly . . . 49
Spindle Assembly No. 115-3435 . . . 50
Battery Assembly . . . 51
Parking Brake Assembly . . . 52
Crankcase Assembly . . . 53
Oil Pan and Dipstick Assembly . . . 54
Cylinder Head Assembly . . . 55
Gear Case and Oil Filter Cartridge Assembly . . . 56
Cylinder Head Cover Assembly . . . 57
Main Bearing Case Assembly . . . 58
Camshaft and Idle Gear Shaft Assembly . . . 59
Piston and Crankshaft Assembly . . . 60
Fuel Camshaft and Governor Shaft Assembly . . . 61
Idle Apparatus and Stop Solenoid Assembly . . . 62
Injection Pump Assembly . . . 63
Governor Assembly . . . 64
Speed Control Plate Assembly . . . 65
Nozzle Holder and Glow Plug Assembly . . . 66



**© 2021—The Toro® Company**


**8111 Lyndale Avenue South**
**Bloomington, MN 55420**





**Contact us at www.Toro.com.**
**Printed in the USA.**


**All Rights Reserved**

# Contents (continued)

Nozzle Holder Assembly . . . . . 67
Alternator, Pulley and Fan Assembly . . . . . 68
Alternator Components Assembly . . . . . 69
Starter and Flywheel Assembly . . . . . 70
Starter Component Assembly . . . . . 71
Water Flange and Thermostat Assembly . . . . . 72
Water Pump and Water Pipe Assembly . . . . . 73
Valve and Rocker Arm Assembly . . . . . 74
Inlet and Exhaust Manifold Assembly . . . . . 75
Miscellaneous Engine Parts . . . . . 76
Attachments and Accessories . . . . . 77

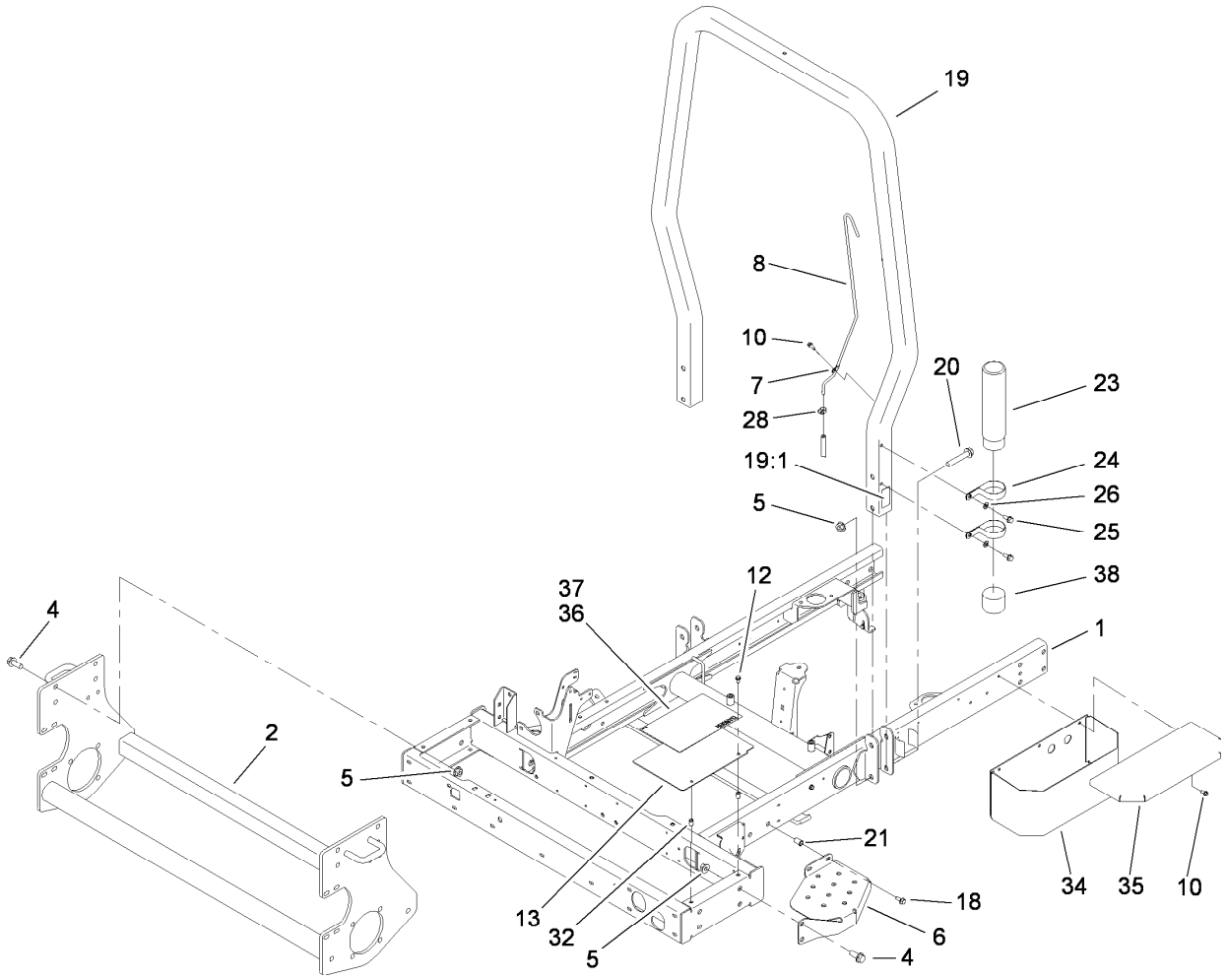


# Frame Assembly

| Ref. | Part Number | Qty. | Description |
|---|---|---|---|
| 1 | 120-3549-03 | 1 | Frame |
| 2 | 95-8568-03 | 1 | Frame-Lower |
| 4 | 3234-38 | 8 | Screw-HHF |
| 5 | 32128-49 | 12 | Nut-HHF |
| 6 | 99-3375-03 | 1 | Step |
| 7 | 2412-72 | 3 | Clip-Closed, Insulated |
| 8 | 95-8615 | 1 | Tube-Breather |
| 10 | 32144-10 | 6 | Screw-HWH |
| 12 | 3234-4 | 2 | Screw-HHF |
| 13 | 104-0468-01 | 1 | Cover-Frame |
| 18 | 3234-5 | 2 | Screw-HHF |
| 19 | 107-7833 | 1 | ROPS ASM |
| 19:1 | 107-7831 | 1 | Decal-ROPS |

| Ref. | Part Number | Qty. | Description |
|---|---|---|---|
| 20 | 3234-40 | 4 | Screw-HF |
| 21 | 32148-8 | 2 | Nut-Clinch |
| 23 | 104-7050 | 1 | Tube-Manual |
| 24 | 2412-133 | 2 | Clamp-R |
| 25 | 32144-70 | 2 | Screw-HWHTF |
| 26 | 3256-23 | 2 | Washer-Plain |
| 28 | 2412-108 | 1 | Clamp-Worm |
| 32 | 32148-6 | 2 | Nut-Clinch |
| 34 | 104-4634-03 | 1 | Toolbox |
| 35 | 104-4633-03 | 1 | Cover-Toolbox |
| 36 | 108-9015 | 1 | Decal-Danger |
| 37 | 104-5181 | 1 | Decal-Danger, CE |
| 38 | 104-7048 | 1 | Cap-Housing |

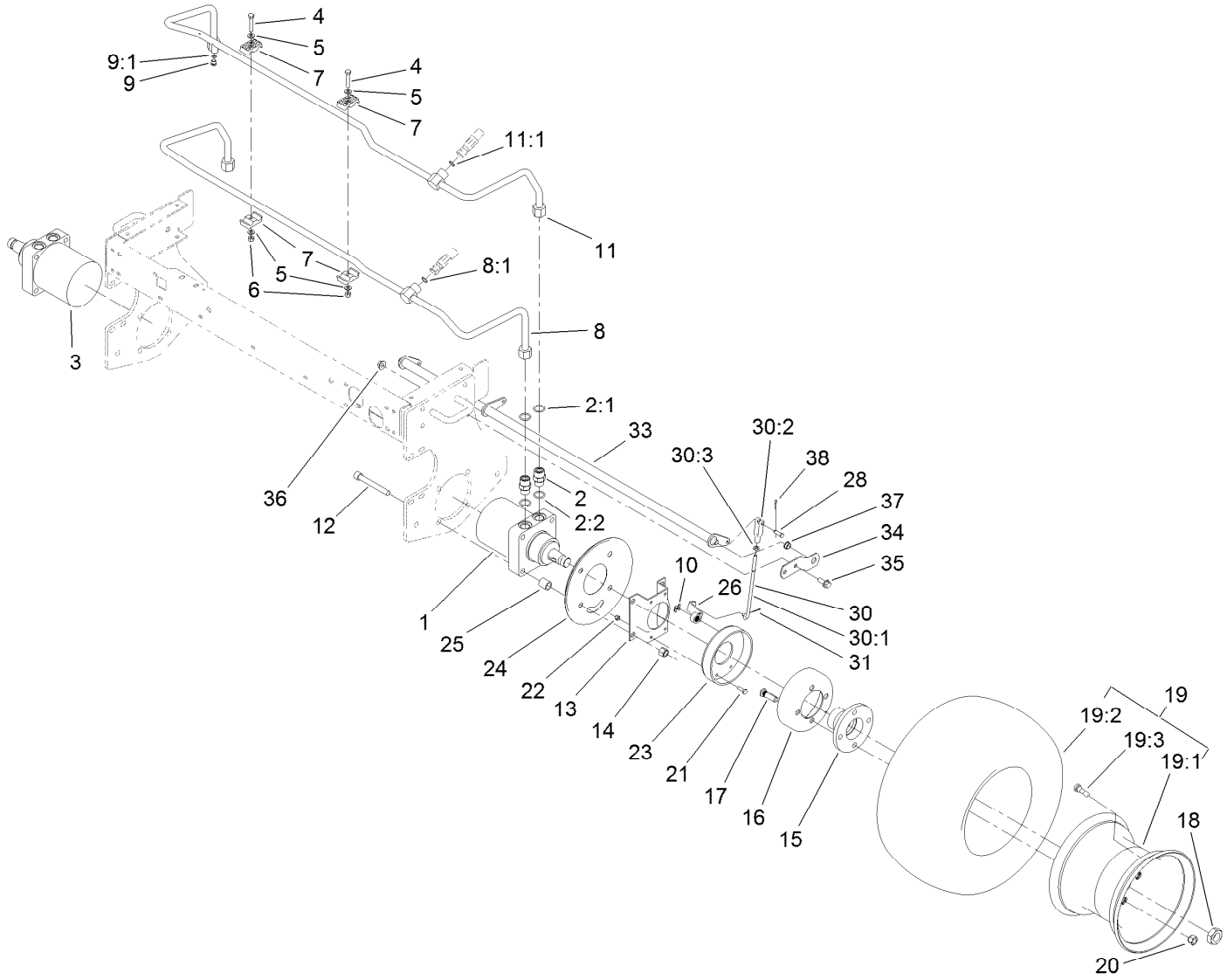


# Front Wheel and Brake Assembly

| Ref. | Part Number | Qty. | Description |
|---|---|---|---|
| 1 | 110-8785 | 1 | HYD Motor ASM (CCW) |
| 2 | 340-7 | 4 | Fitting-Straight |
| 2:1 | 237-65 | 1 | O-Ring |
| 2:2 | 237-80 | 1 | O-Ring |
| 3 | 110-8786 | 1 | HYD Motor ASM (CW) |
| 4 | 322-9 | 2 | Screw-HH |
| 5 | 3256-23 | 4 | Washer-Plain |
| 6 | 3296-29 | 2 | Nut-Lock, NI |
| 7 | 56-7971 | 4 | Clamp-Tube |
| 8 | 95-8783 | 1 | Tube ASM |
| 8:1 | 237-65 | 1 | O-Ring |
| 9 | 353-990 | 1 | Plug ASM |
| 9:1 | 237-78 | 1 | O-Ring |
| 10 | 104-7706 | 2 | E-Ring, Bowed |
| 11 | 95-8784 | 1 | Tube ASM |
| 11:1 | 237-65 | 1 | O-Ring |
| 12 | 3274-99 | 8 | Screw-HSH |
| 13 | 84-2000-03 | 2 | Bracket-Brake |

| Ref. | Part Number | Qty. | Description |
|---|---|---|---|
| 14 | 3296-23 | 8 | Nut-Lock, NI |
| 15 | 93-6838 | 2 | Hub-Wheel |
| 16 | 10-6850 | 2 | Drum-Brake |
| 17 | 85-6540 | 8 | Stud-Drive |
| 18 | 26-3790 | 2 | Nut-Lock |
| 19 | | 2 | Tire And Rim ASM ● |
| 19:1 | 121-3550 | 1 | Rim |
| 19:2 | 115-1572 | 1 | Tire |
| 19:3 | 232-27 | 1 | Stem-Valve |
| 20 | 242-50 | 8 | Nut-Lug |
| 21 | 321-5 | 8 | Screw-HH |
| 22 | 3296-42 | 8 | Nut-Lock, NI |
| 23 | 104-7705 | 2 | Brake ASM |
| 24 | 104-0485-03 | 2 | Shield-Wheel |
| 25 | 119-8238 | 8 | Spacer-Deck Pulley |
| 26 | 114-2726 | 2 | Lever-Brake |
| 28 | 283-1 | 2 | Pin-Clevis |
| 30 | 115-6672 | 2 | Brake Lever ASM |

● Not serviced separately

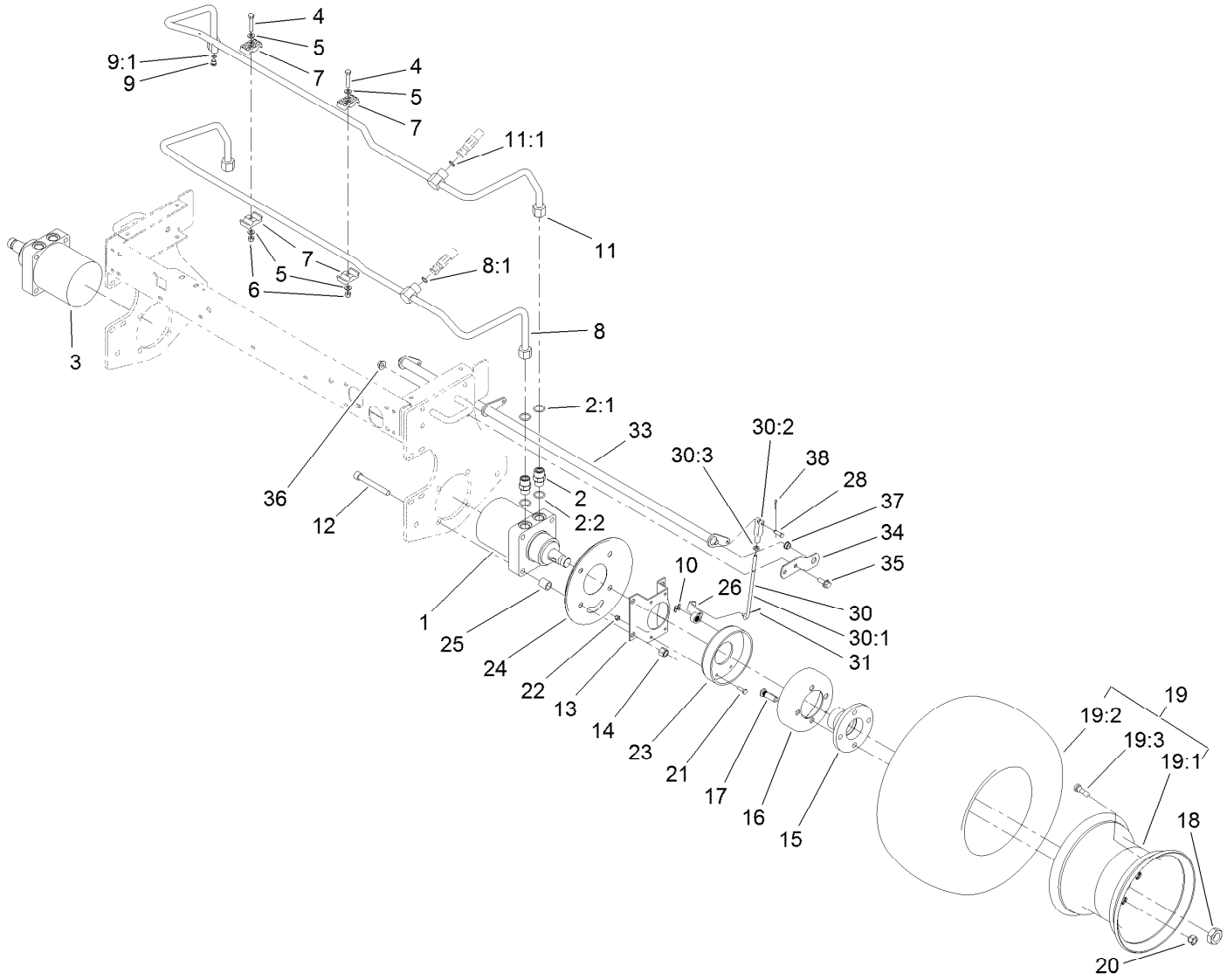


# Front Wheel and Brake Assembly (continued)

| Ref. | Part Number | Qty. | Description |
|---|---|---|---|
| 30:1 | 104-4627 | 1 | Rod-Adjusting |
| 30:2 | 1-303105 | 1 | Yoke-Adjustable |
| 30:3 | 3220-2 | 1 | Nut-Jam |
| 31 | 3272-6 | 2 | Pin-Cotter |
| 33 | 104-4625-03 | 1 | Shaft-Pivot, Brake |

| Ref. | Part Number | Qty. | Description |
|---|---|---|---|
| 34 | 95-8683 | 2 | Bracket-Pivot, Brake |
| 35 | 3234-11 | 4 | Screw-HHF |
| 36 | 32128-43 | 4 | Nut-Flange |
| 37 | 256-156 | 2 | Bushing-Flange |
| 38 | 3272-10 | 2 | Pin-Cotter |

● Not serviced separately

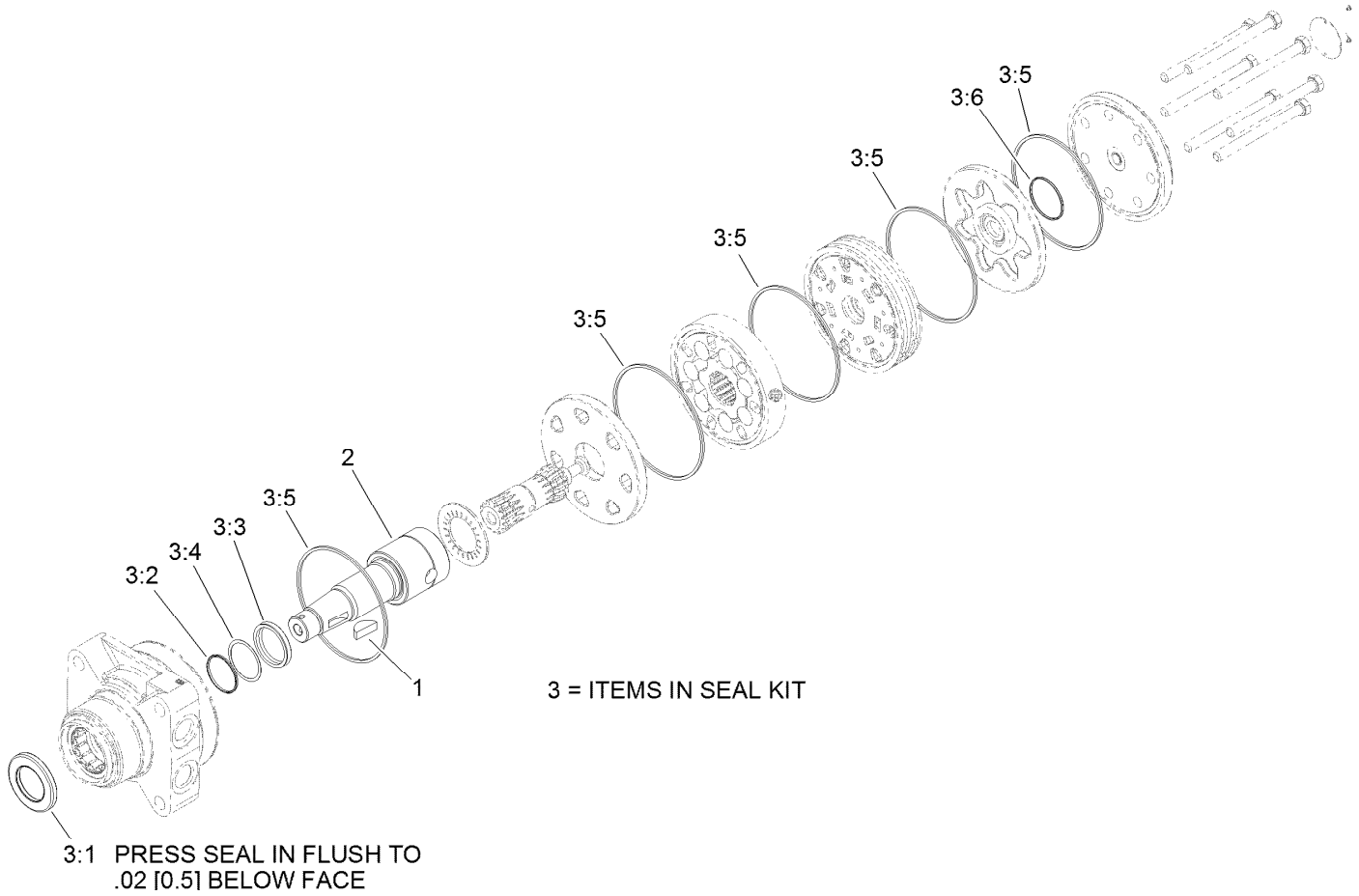


# Hydraulic Motor Assembly No. 110-8785

| *Ref.* | *Part Number* | *Qty.* | *Description* |
|---|---|---|---|
| 1 | 3257-42 | 1 | Key-Woodruff |
| 2 | 99-3090 | 1 | Shaft-Coupling |
| 3 | 94-8178 | 1 | Seal Kit |
| 3:1 | | 1 | Seal-Dirt And Water ● |
| 3:2 | | 1 | Backup-Ring ● |
| 3:3 | | 1 | Seal-Shaft ● |
| 3:4 | | 1 | Washer-Backup ● |
| 3:5 | | 5 | Seal-Square, Ring (Inner) ● |
| 3:6 | | 1 | Seal-Commutator ● |

● Not serviced separately

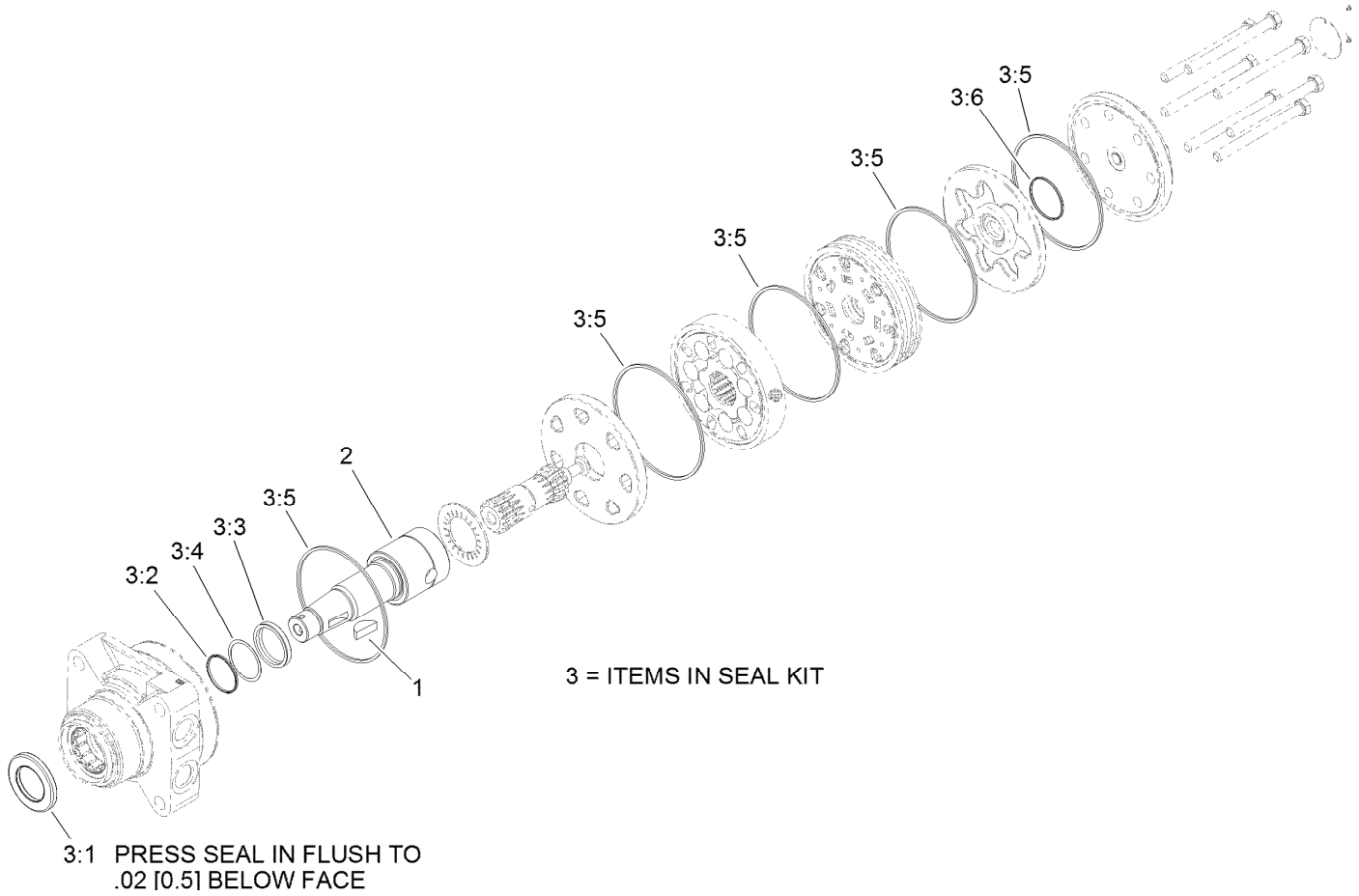


# Hydraulic Motor Assembly No. 110-8786

| *Ref.* | *Part Number* | *Qty.* | *Description* |
|---|---|---|---|
| 1 | 3257-42 | 1 | Key-Woodruff |
| 2 | 99-3090 | 1 | Shaft-Coupling |
| 3 | 94-8178 | 1 | Seal Kit |
| 3:1 | | 1 | Seal-Dirt And Water ● |
| 3:2 | | 1 | Backup-Ring ● |
| 3:3 | | 1 | Seal-Shaft ● |
| 3:4 | | 1 | Washer-Backup ● |
| 3:5 | | 5 | Seal-Square, Ring (Inner) ● |
| 3:6 | | 1 | Seal-Commutator ● |

● Not serviced separately

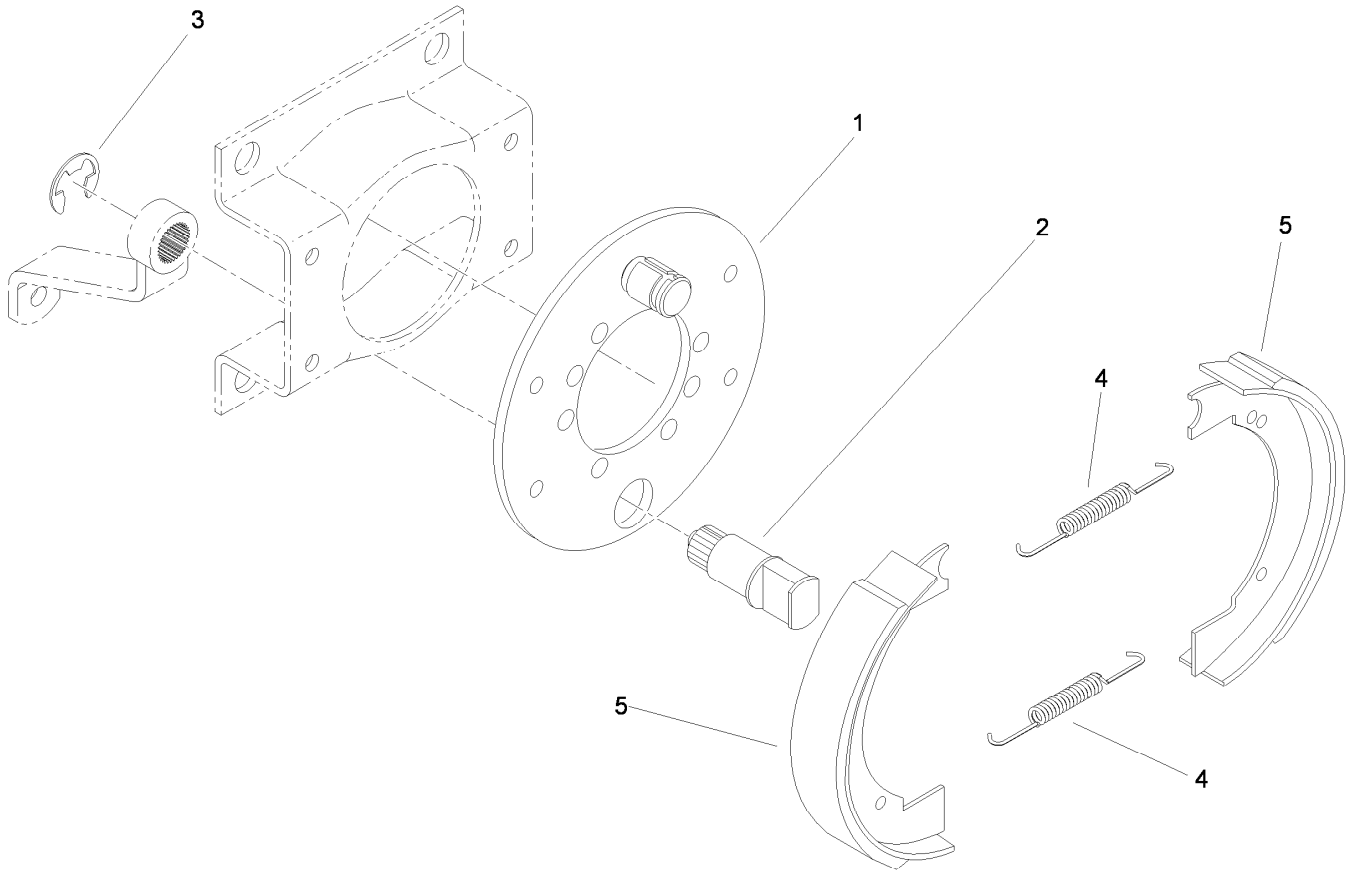


# Brake Assembly No. 104-7705

| *Ref.* | *Part Number* | *Qty.* | *Description* |
|---|---|---|---|
| 1 | 70-9870 | 1 | Plate-Backing |
| 2 | 104-7707 | 1 | Shaft-Cam, Brake |
| 3 | 104-7706 | 1 | E-Ring, Bowed |
| 4 | 70-9880 | 2 | Spring-Return |
| 5 | 70-9840 | 2 | Shoe-Brake |

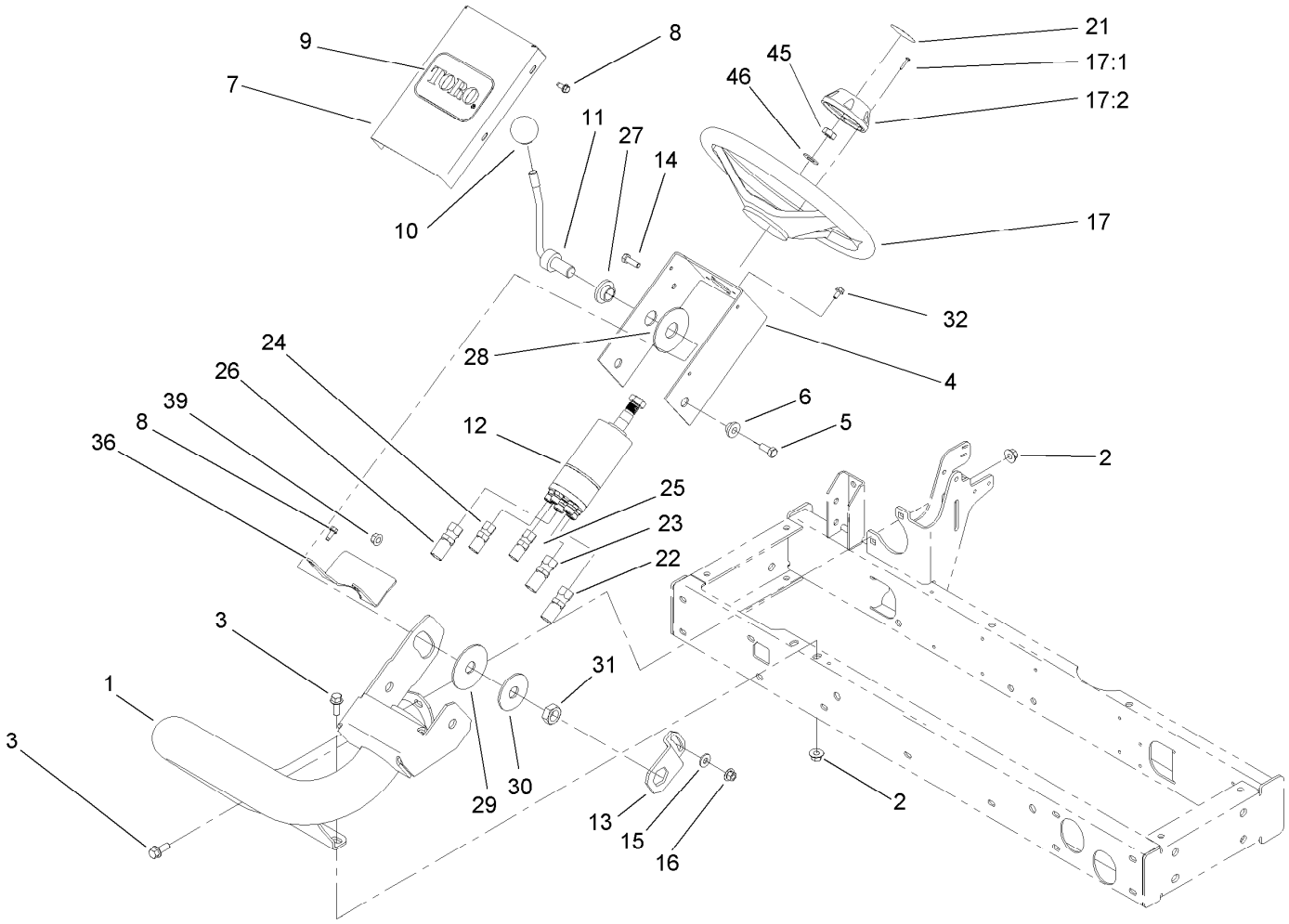


# Steering Column Assembly

| Ref. | Part Number | Qty. | Description |
|---|---|---|---|
| 1 | 108-9003-01 | 1 | Arm-Steering |
| 2 | 32128-43 | 4 | Nut-Flange |
| 3 | 3234-11 | 4 | Screw-HHF |
| 4 | 104-5185-01 | 1 | Bracket-Valve, Steering |
| 5 | 323-5 | 2 | Screw-HH |
| 6 | 93-5988 | 2 | Hub-Pivot |
| 7 | 95-8794-01 | 1 | Cover-Valve, Steering |
| 8 | 32144-10 | 5 | Screw-HWH |
| 9 | 67-1300 | 1 | Decal |
| 10 | 233-48 | 1 | Knob |
| 11 | 95-8798-03 | 1 | Lever-Steering |
| 12 | 104-5180 | 1 | Steering Valve ASM |
| 13 | 80-2880 | 1 | Bracket-Tilt |
| 14 | 322-5 | 1 | Screw-HH |
| 15 | 3256-3 | 1 | Washer-Flat |
| 16 | 32128-44 | 1 | Nut |
| 17 | 75-0560 | 1 | Steering Wheel ASM |
| 17:1 | 32144-21 | 1 | Screw |

| Ref. | Part Number | Qty. | Description |
|---|---|---|---|
| 17:2 | 68-5140 | 1 | Cap-Wheel, Steering |
| 21 | 68-5370 | 1 | Decal |
| 22 | 95-8842 | 1 | Hose-HYD |
| 23 | 95-8843 | 1 | Hose-HYD |
| 24 | 100-4892 | 1 | Hose-HYD |
| 25 | 100-4893 | 1 | Hose-HYD |
| 26 | 95-8846 | 1 | Hose-HYD |
| 27 | 99-3502 | 1 | Boss |
| 28 | 31-0390 | 1 | Disc-Friction |
| 29 | 82-9010 | 1 | Disc-Friction |
| 30 | 80-2930 | 1 | Washer-Flat |
| 31 | 3218-7 | 1 | Nut-Jam |
| 32 | 33103-012 | 4 | Screw-HHF |
| 36 | 99-3405-01 | 1 | Shield-Steering |
| 39 | 32128-21 | 2 | Nut-HF Lock |
| 45 | 3296-33 | 1 | Nut-Lock, NI |
| 46 | 3256-27 | 1 | Washer-Flat |

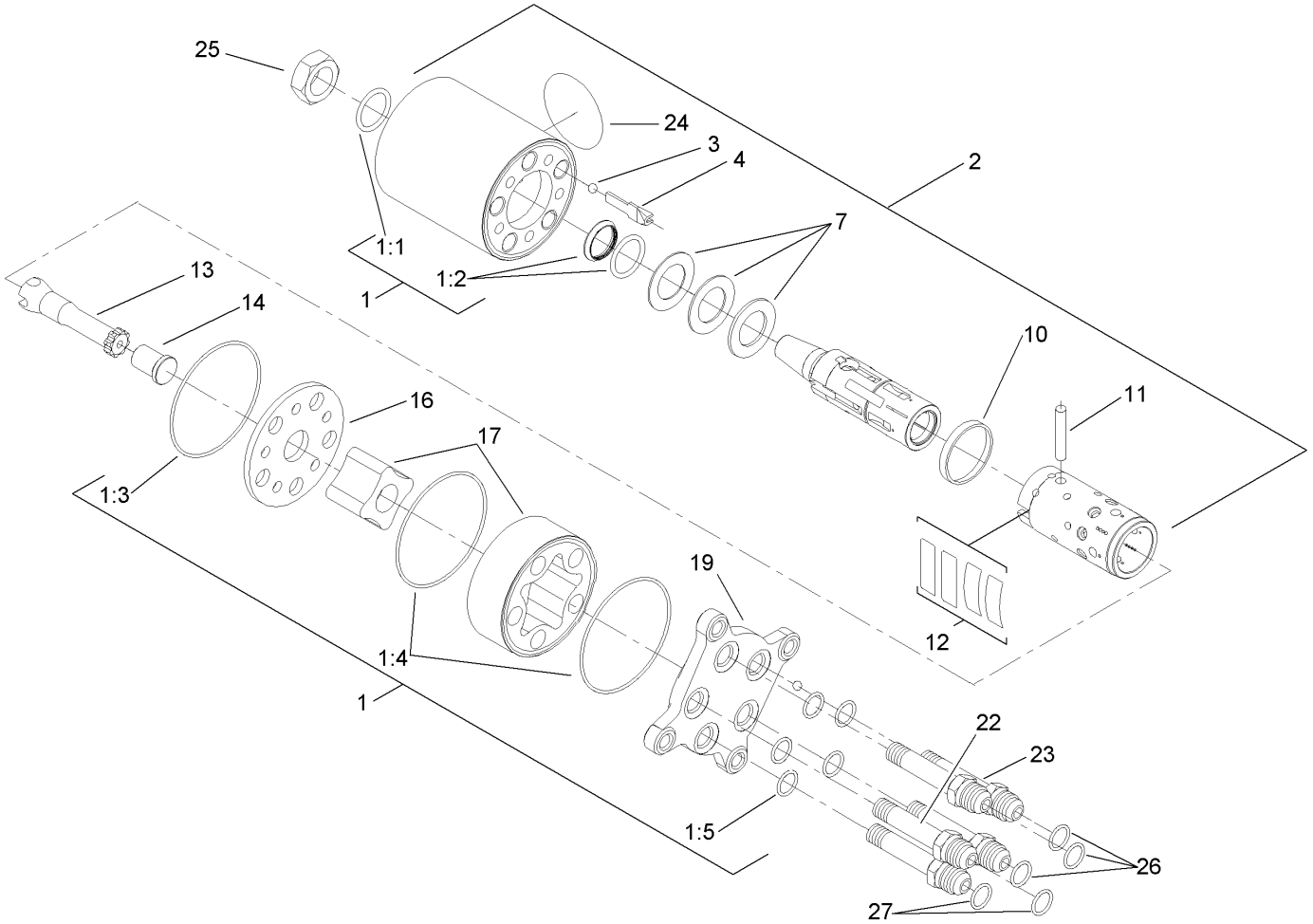


# Steering Valve Assembly No. 104-5180

| Ref. | Part Number | Qty. | Description |
|---|---|---|---|
| 1 | 106-6716 | 1 | Seal Kit |
| 1:1 | | 1 | Ring-Seal, Dust ● |
| 1:2 | | 1 | Seal-Shaft ● |
| 1:3 | | 1 | O-Ring ● |
| 1:4 | | 2 | O-Ring ● |
| 1:5 | | 5 | O-Ring ● |
| 2 | | 1 | Housing ● |
| 3 | | 1 | Ball ● |
| 4 | | 1 | Stop-Ball ● |
| 7 | | 1 | Bearing ASM ● |
| 10 | | 1 | Ring ● |
| 11 | | 1 | Pin-Cross ● |
| 12 | | 1 | Springs ● |
| 13 | | 1 | Shaft ● |
| 14 | | 1 | Spacer ● |
| 16 | | 1 | Plate-Distributor ● |
| 17 | | 1 | Gearwheel Set ● |
| 19 | | 1 | Cover-End ● |
| 22 | | 1 | Screw-Special ● |
| 23 | | 4 | Screw-Special ● |
| 24 | | 1 | Plate-Name ● |
| 25 | 3296-33 | 1 | Nut-Lock, NI |
| 26 | 237-22 | 3 | O-Ring |
| 27 | 237-21 | 2 | O-Ring |

● Not serviced separately

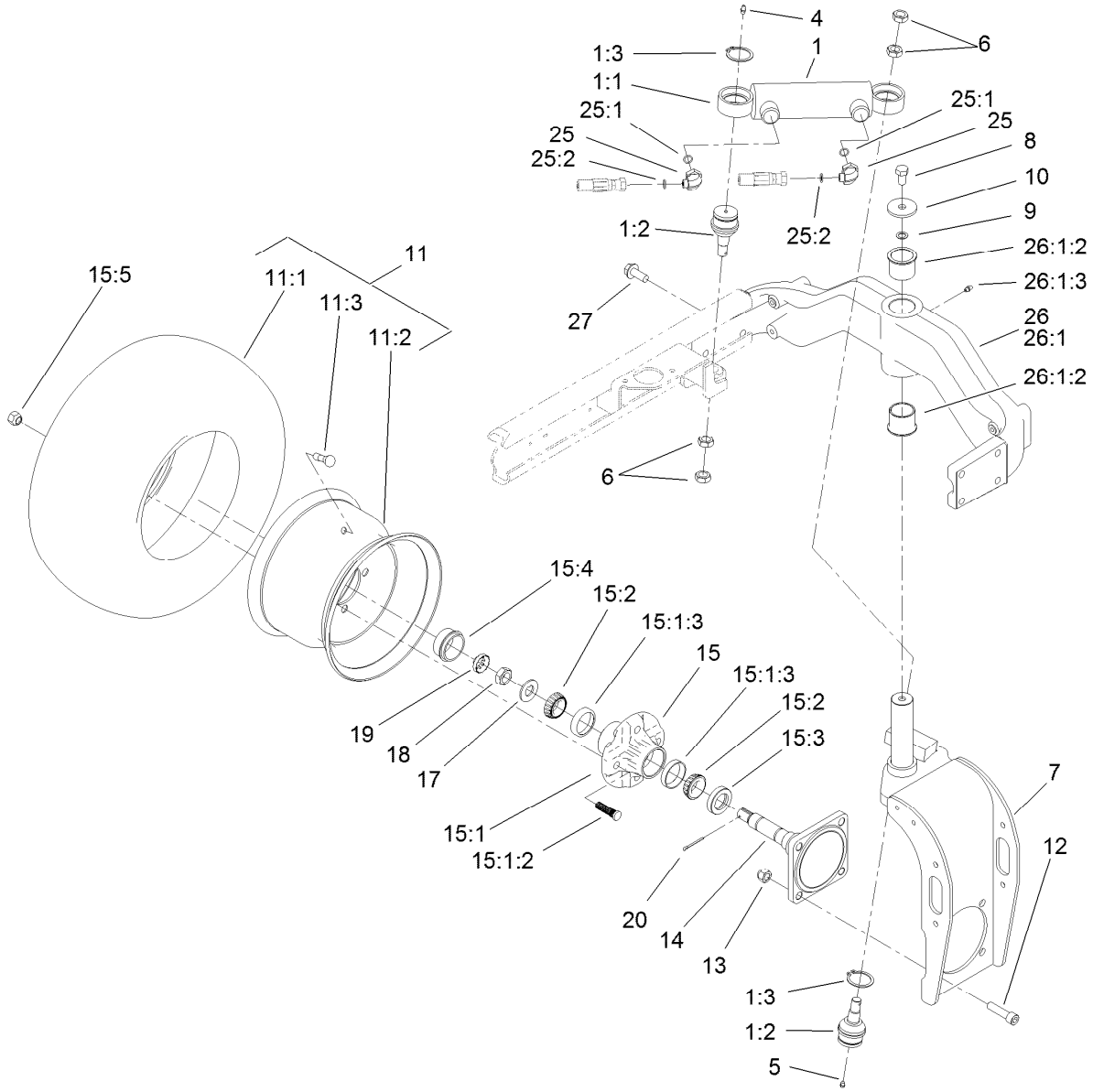


# Rear Fork and Tire Assembly

| Ref. | Part Number | Qty. | Description |
|---|---|---|---|
| 1 | | 1 | Steering Cylinder / Balljoint ASM ● |
| 1:1 | 94-8141 | 1 | HYD Cylinder ASM |
| 1:2 | 106-6774 | 2 | Joint-Ball |
| 1:3 | 32151-104 | 2 | Ring-Retaining, External |
| 4 | 302-5 | 1 | Fitting-Grease |
| 5 | 302-59 | 1 | Plug-EXT Hex Spl |
| 6 | 3220-6 | 4 | Nut-Jam |
| 7 | 95-8905-01 | 1 | Fork-Rear |
| 8 | 325-3 | 1 | Screw-HH |
| 9 | 3255-2 | 1 | Washer-Lock, EXT |
| 10 | 75-7730 | 1 | Washer-Thrust |
| 11 | | 1 | Wheel And Tire ASM ● |
| 11:1 | 117-5129 | 1 | Rim |
| 11:2 | 115-1572 | 1 | Tire |
| 11:3 | 232-27 | 1 | Stem-Valve |
| 12 | 3274-5 | 4 | Screw-HSH |
| 13 | 3296-23 | 4 | Nut-Lock, NI |

| Ref. | Part Number | Qty. | Description |
|---|---|---|---|
| 14 | 115-6655-03 | 1 | Spindle |
| 15 | 117-5115 | 1 | Hub And Bearing ASM |
| 15:1 | 117-8251 | 1 | Hub ASM |
| 15:1:2 | 114-3918 | 4 | Stud-Wheel |
| 15:1:3 | 254-72 | 2 | Bearing-Cup, Tapered |
| 15:2 | 254-94 | 2 | Bearing-Cone, Tapered |
| 15:3 | 112-1690 | 1 | Seal-Oil |
| 15:4 | 241-119 | 1 | Cap-Dust |
| 15:5 | 242-50 | 4 | Nut-Lug |
| 17 | 93-0309 | 1 | Washer-Tab |
| 18 | 3220-7 | 1 | Nut-Jam |
| 19 | 93-0307 | 1 | Nut-Lock, Retainer |
| 20 | 3272-13 | 1 | Pin-Cotter |
| 25 | 340-132 | 2 | Fitting-Elbow, 90 DEG |
| 25:1 | 237-78 | 1 | O-Ring |
| 25:2 | 237-21 | 1 | O-Ring |
| 26 | 107-7828-03 | 1 | Casting-Rear |
| 26:1 | | 1 | Rear Casting ASM ● |

● Not serviced separately

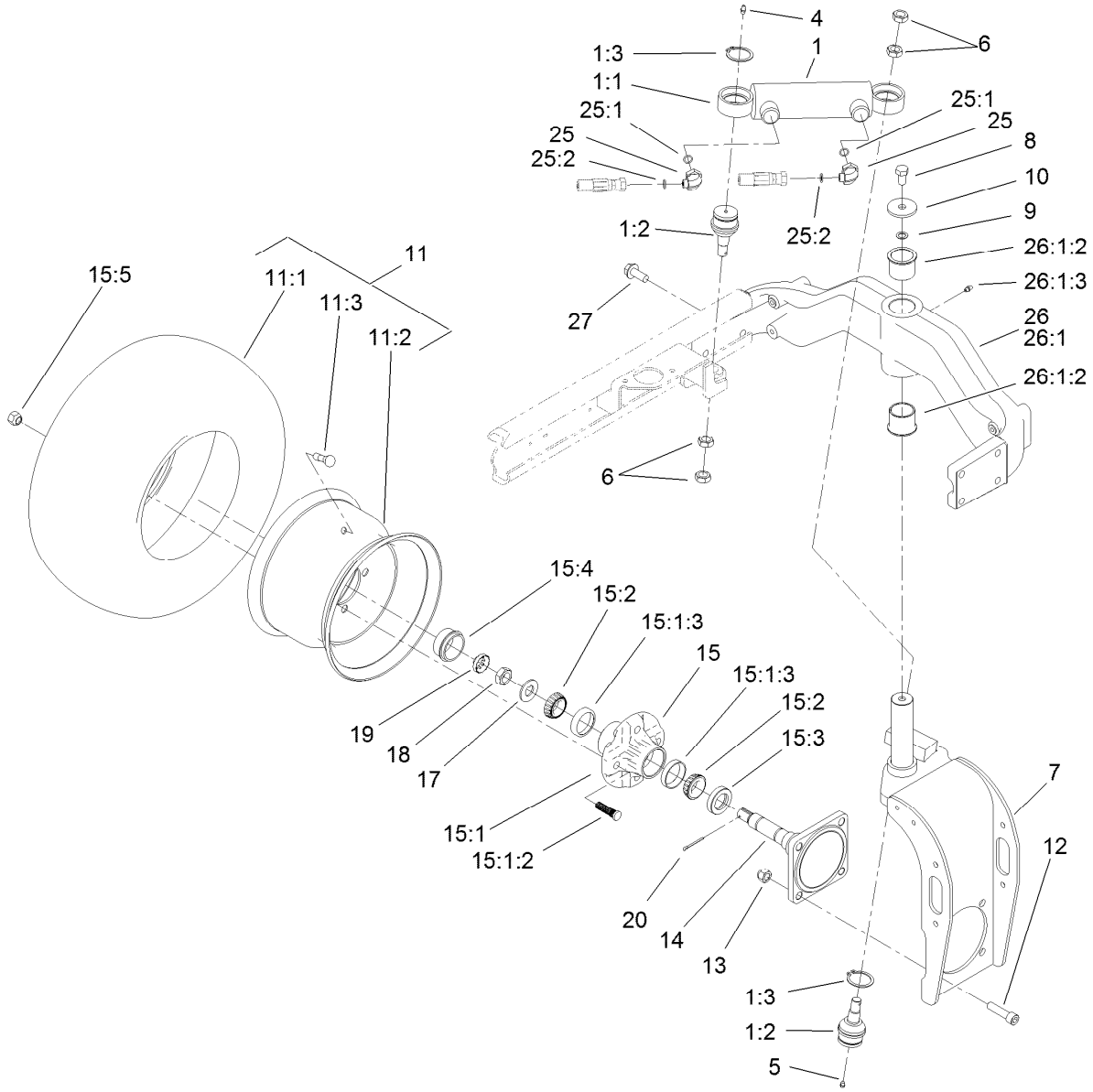


# Rear Fork and Tire Assembly (continued)

| Ref. | Part Number | Qty. | Description |
|---|---|---|---|
| 26:1:2 | 95-8805 | 2 | Bushing |

| Ref. | Part Number | Qty. | Description |
|---|---|---|---|
| 26:1:3 | 302-5 | 1 | Fitting-Grease |
| 27 | 3234-38 | 8 | Screw-HHF |

● Not serviced separately

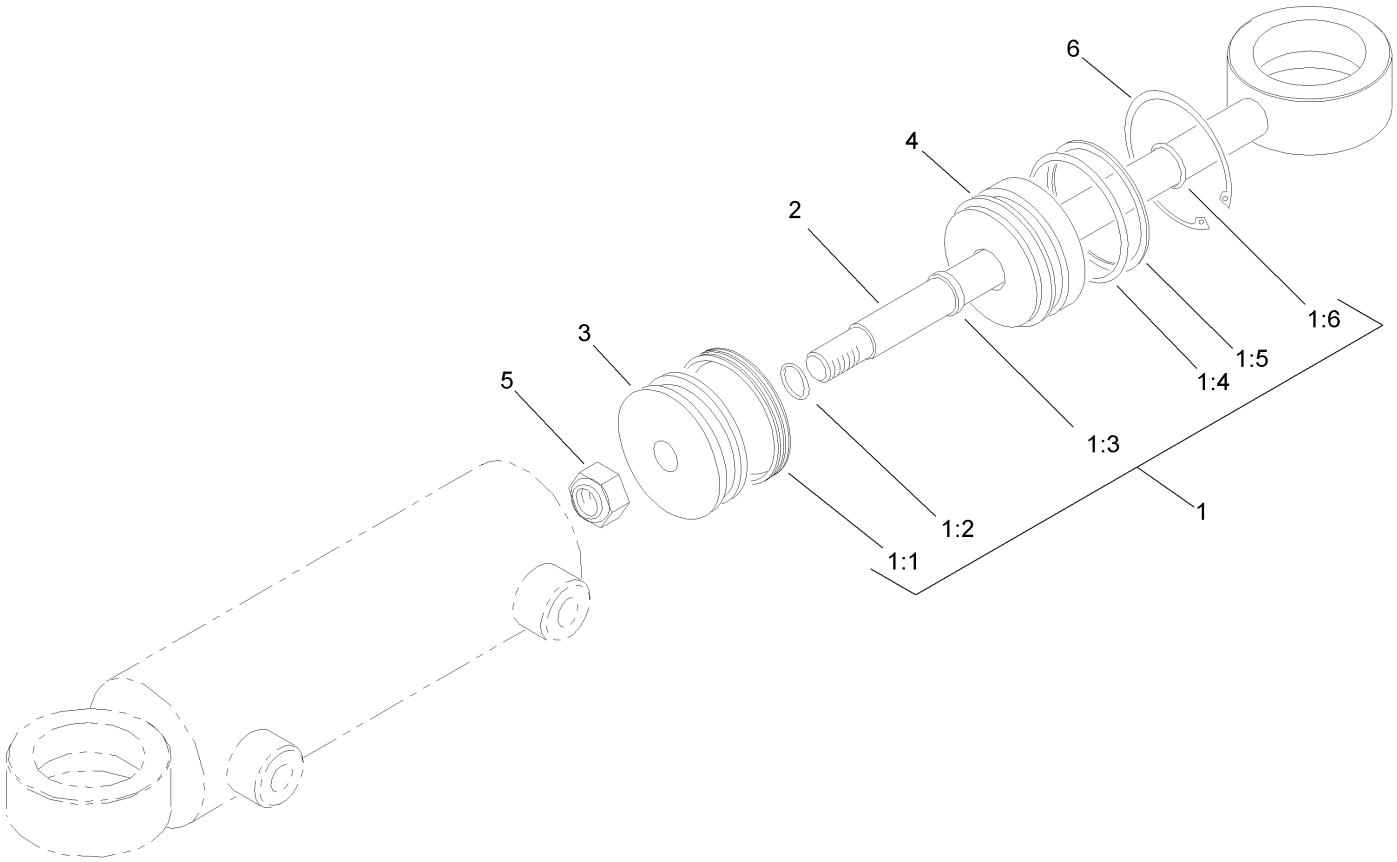


# Hydraulic Cylinder Assembly No. 94-8141

| *Ref.* | *Part Number* | *Qty.* | *Description* |
|---|---|---|---|
| 1 | 86-5390 | 1 | Seal Kit |
| 1:1 | | 1 | Uniring ● |
| 1:2 | | 1 | O-Ring ● |
| 1:3 | | 1 | Seal-Rod ● |
| 1:4 | | 1 | O-Ring ● |
| 1:5 | | 1 | Ring-Backup ● |
| 1:6 | | 1 | O-Ring ● |
| 2 | | 1 | Rod ● |
| 3 | | 1 | Piston ● |
| 4 | | 1 | Gland ● |
| 5 | | 1 | Nut-Lock ● |
| 6 | | 1 | Ring-Retaining ● |

● Not serviced separately

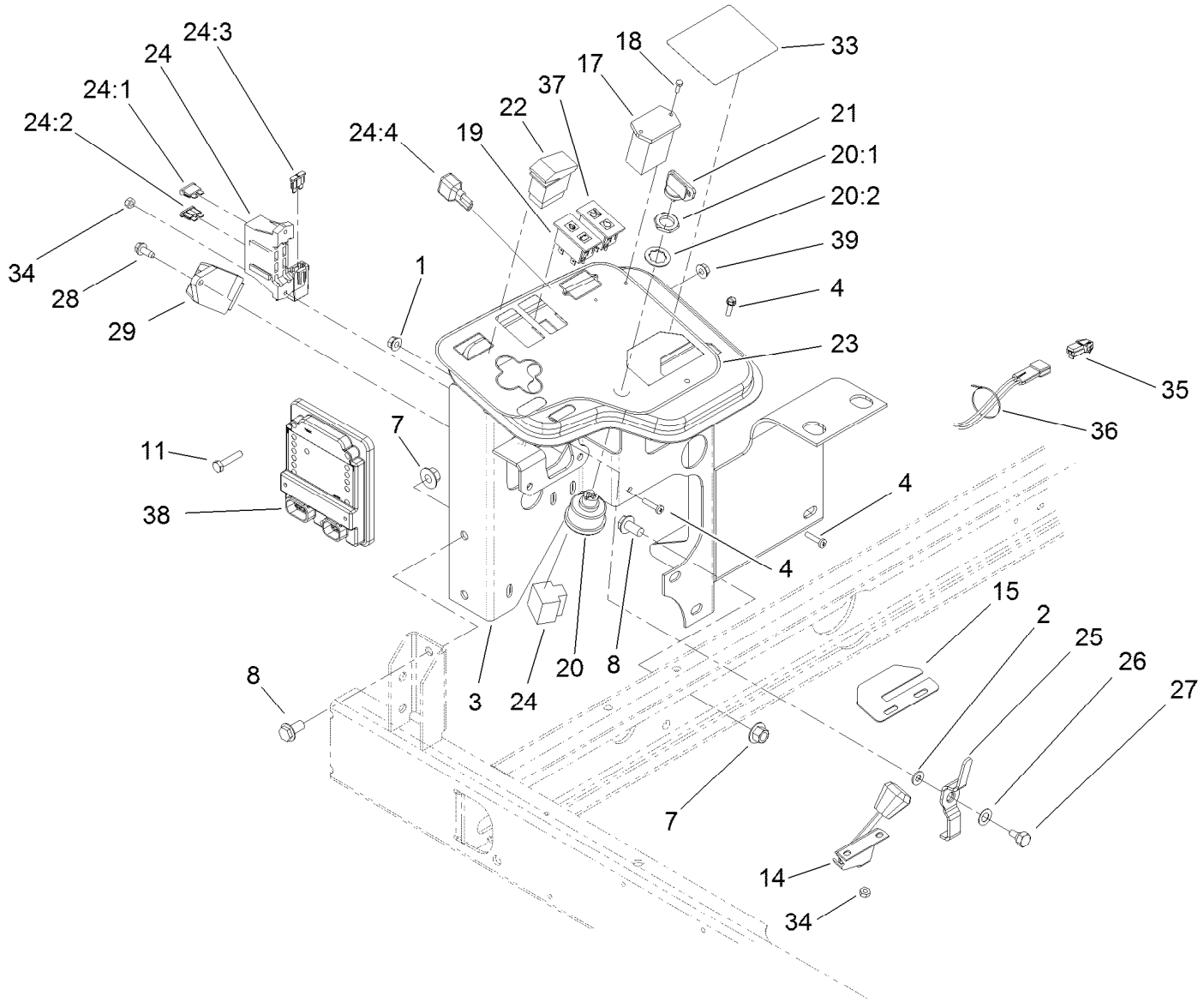


# Control Panel Assembly

| Ref. | Part Number | Qty. | Description |
|---|---|---|---|
| 1 | 32128-32 | 1 | Nut-HHF |
| 2 | 3256-22 | 1 | Washer-Flat |
| 3 | 115-3496-03 | 1 | Panel-Control |
| 4 | 3290-134 | 4 | Screw |
| 7 | 32128-43 | 5 | Nut-Flange |
| 8 | 3234-1 | 5 | Screw-HHF |
| 11 | 321-8 | 3 | Screw-HH |
| 14 | 110-8795 | 1 | Cable-Throttle |
| 15 | 104-0421 | 1 | Plate-Stop, Throttle |
| 17 | 75-6820 | 1 | Hourmeter |
| 18 | 32144-18 | 2 | Screw-HWH |
| 19 | 100-8070 | 1 | Lamp-Warning |
| 20 | 104-2541 | 1 | Ignition Switch ASM |
| 20:1 | 218-461 | 1 | Nut-HH |
| 20:2 | 3254-5 | 1 | Washer-Lock |
| 21 | 63-8360 | 2 | Key-Ignition |
| 22 | 93-9999 | 1 | Switch-PTO |
| 23 | 121-3581 | 1 | Decal-Console |

| Ref. | Part Number | Qty. | Description |
|---|---|---|---|
| 24 | 122-0258 | 1 | Harness-Wire |
| 24:1 | 218-578 | 1 | Fuse-Blade, 10 Amp |
| 24:2 | 109355 | 1 | Fuse-Blade, 15 Amp |
| 24:3 | 94-6710 | 1 | Fuse-2 Amp |
| 24:4 | 100-4918 | 1 | Diode |
| 25 | 99-3401-03 | 1 | Lever-Valve, Lock |
| 26 | 3290-477 | 1 | Washer-Curved |
| 27 | 63-3410 | 1 | Screw-Shoulder |
| 28 | 32144-10 | 1 | Screw-HWH |
| 29 | 98-7611 | 1 | Controller-Glow |
| 33 | 99-3558 | 1 | Decal-Console, CE |
| 34 | 3290-148 | 4 | Nut-HF |
| 35 | 104-4875 | 1 | Harness-Wire, Jumper |
| 36 | 3290-379 | 1 | Tie-Cable |
| 37 | 100-8071 | 1 | Lamp-Warning |
| 38 | 106-9277 | 1 | Module-Control, Standard |
| 39 | 32128-33 | 3 | Nut-HF |

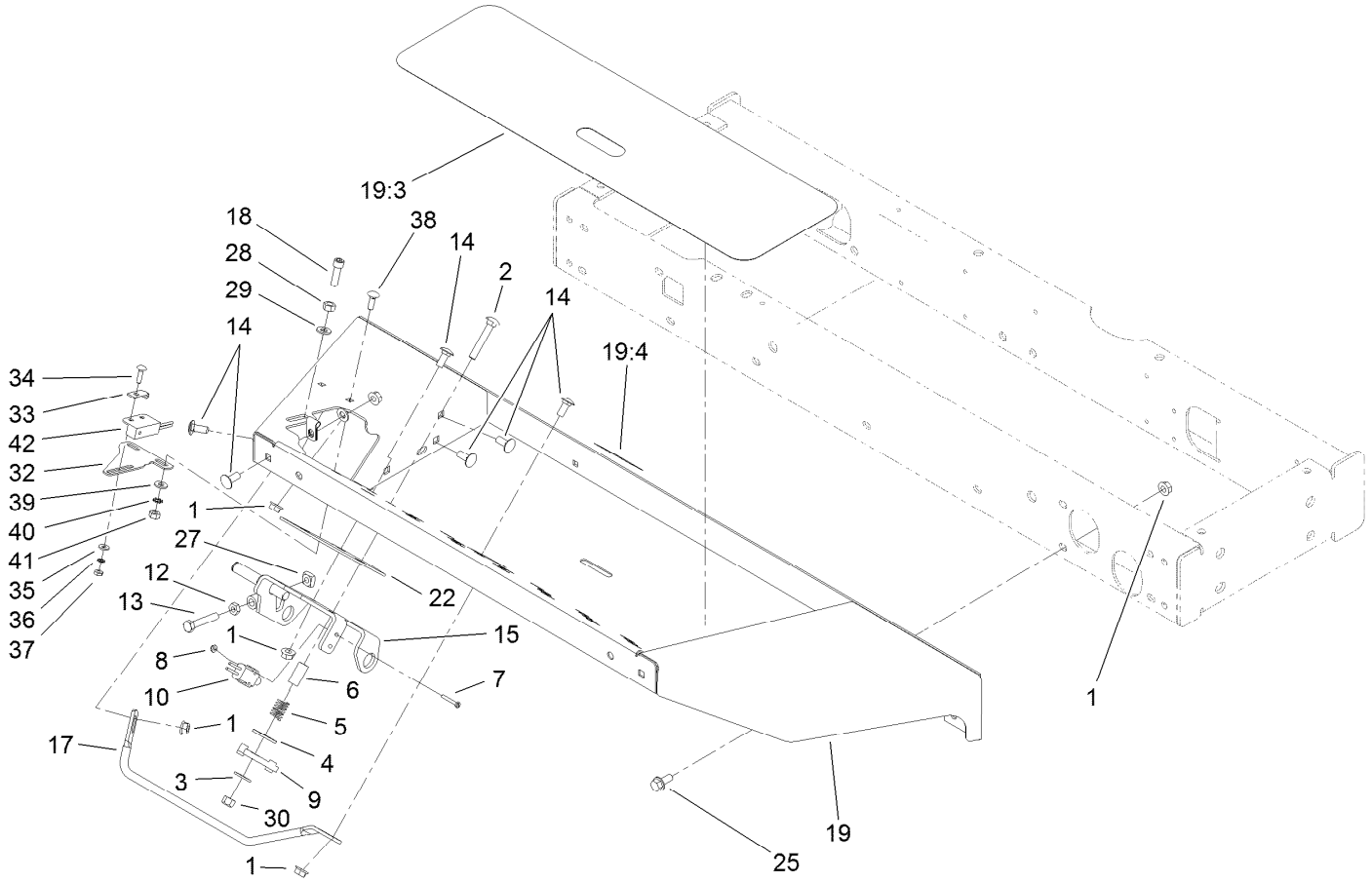


# Front Platform Assembly

| Ref. | Part Number | Qty. | Description |
|---|---|---|---|
| 1 | 32128-20 | 17 | Nut-HF |
| 2 | 3230-6 | 1 | Bolt-CARR |
| 3 | 3256-3 | 1 | Washer-Flat |
| 4 | 3256-40 | 1 | Washer-Flat |
| 5 | 65-9940 | 1 | Spring |
| 6 | 95-8866 | 1 | Tube-Arm, Rocker |
| 7 | 32105-9 | 2 | Screw |
| 8 | 3296-9 | 2 | Nut-Hex |
| 9 | 99-3593 | 1 | Arm-Rocker |
| 10 | 95-8900 | 1 | Switch |
| 12 | 3218-2 | 1 | Nut-Hex Jam |
| 13 | 322-41 | 1 | Bolt-Hex,TAP |
| 14 | 3230-23 | 6 | Bolt-CARR |
| 15 | 95-8869-03 | 1 | Bracket-Pedal, Traction |
| 17 | 95-8893 | 1 | Bar-Deflector |
| 18 | 3274-22 | 1 | Screw-HSH |
| 19 | 106-4154 | 1 | Floorplate ASM |
| 19:3 | 99-3478 | 1 | Tread-Foot |

| Ref. | Part Number | Qty. | Description |
|---|---|---|---|
| 19:4 | 99-3444 | 1 | Decal-Mow / Transport |
| 22 | 106-2661-01 | 1 | Plate-Support |
| 25 | 3234-5 | 10 | Screw-HHF |
| 27 | 99-3565 | 1 | Nut-Square |
| 28 | 3217-6 | 1 | Nut-Hex |
| 29 | 3256-23 | 1 | Washer-Plain |
| 30 | 3296-29 | 1 | Nut-Lock, NI |
| 32 | 100-4871 | 1 | Bracket-Switch, Neutral |
| 33 | 100-4872 | 1 | Plate-Switch, Neutral |
| 34 | 3229-20 | 1 | Screw-CARR |
| 35 | 3256-14 | 1 | Washer-Flat |
| 36 | 3255-17 | 1 | Washer-Lock, EXT |
| 37 | 3296-2 | 1 | Nut-Lock, NI |
| 38 | 3229-1 | 2 | Screw-CARR |
| 39 | 3256-22 | 2 | Washer-Flat |
| 40 | 3255-7 | 2 | Washer-Lock/EXT |
| 41 | 3217-5 | 2 | Nut-Hex |
| 42 | 100-1270 | 1 | Switch-Proximity |

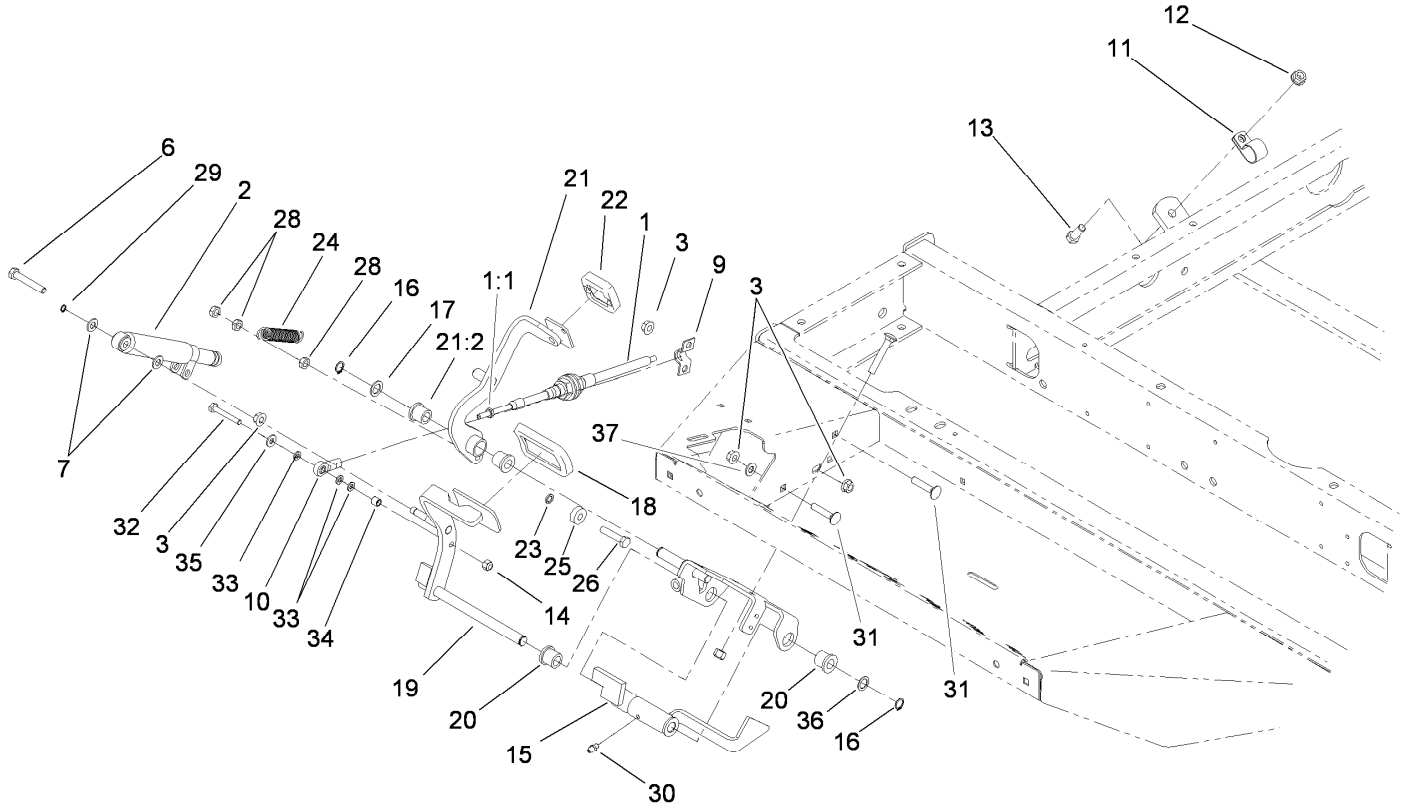


# Traction Pedal Assembly

| Ref. | Part Number | Qty. | Description |
|---|---|---|---|
| 1 | 100-4815 | 1 | Cable-Control, Traction |
| 1:1 | 3220-1 | 2 | Nut-Jam |
| 2 | 76-8870 | 1 | Damper-Lever |
| 3 | 32128-20 | 5 | Nut-HF |
| 6 | 322-10 | 1 | Screw-HH |
| 7 | 3256-23 | 2 | Washer-Plain |
| 9 | 93-2092 | 1 | Clamp-Cable |
| 10 | 2411-41 | 1 | Rod End-Ball Joint |
| 11 | 2412-41 | 1 | Clamp-R |
| 12 | 3290-357 | 1 | Nut-HHF, Whiz |
| 13 | 323-6 | 1 | Screw-HH |
| 14 | 3296-42 | 1 | Nut-Lock, NI |
| 15 | 95-8861 | 1 | Slide |
| 16 | 32151-84 | 2 | Ring-Shaft, EXT |
| 17 | 41-8440 | 1 | Washer |
| 18 | 74-9100 | 1 | Pad-Pedal, Forward |
| 19 | 104-4852-03 | 1 | Pedal-Traction |
| 20 | 256-243 | 2 | Bearing-Flange |

| Ref. | Part Number | Qty. | Description |
|---|---|---|---|
| 21 | 99-3379 | 1 | Pedal-Reverse ASM |
| 21:2 | 256-243 | 2 | Bearing-Flange |
| 22 | 74-9110 | 1 | Pad-Pedal, Reverse |
| 23 | 75-5470 | 1 | Spacer-Bearing |
| 24 | 99-3476 | 1 | Spring-Extension |
| 25 | 251-259 | 1 | Bearing-Ball |
| 26 | 322-7 | 1 | Screw-HH |
| 28 | 3296-47 | 3 | Nut-Lock,NI |
| 29 | 32151-3 | 1 | Ring-Grip |
| 30 | 302-5 | 1 | Fitting-Grease |
| 31 | 3230-27 | 1 | Screw-CARR |
| 32 | 321-10 | 1 | Screw-HH |
| 33 | 33093-00 | 3 | Washer-Flat |
| 34 | 99-3545 | 1 | Spacer |
| 35 | 3256-22 | 1 | Washer-Flat |
| 36 | 73-0040 | 4 | Washer-Thrust |
| 37 | 3256-24 | 1 | Washer-Flat |

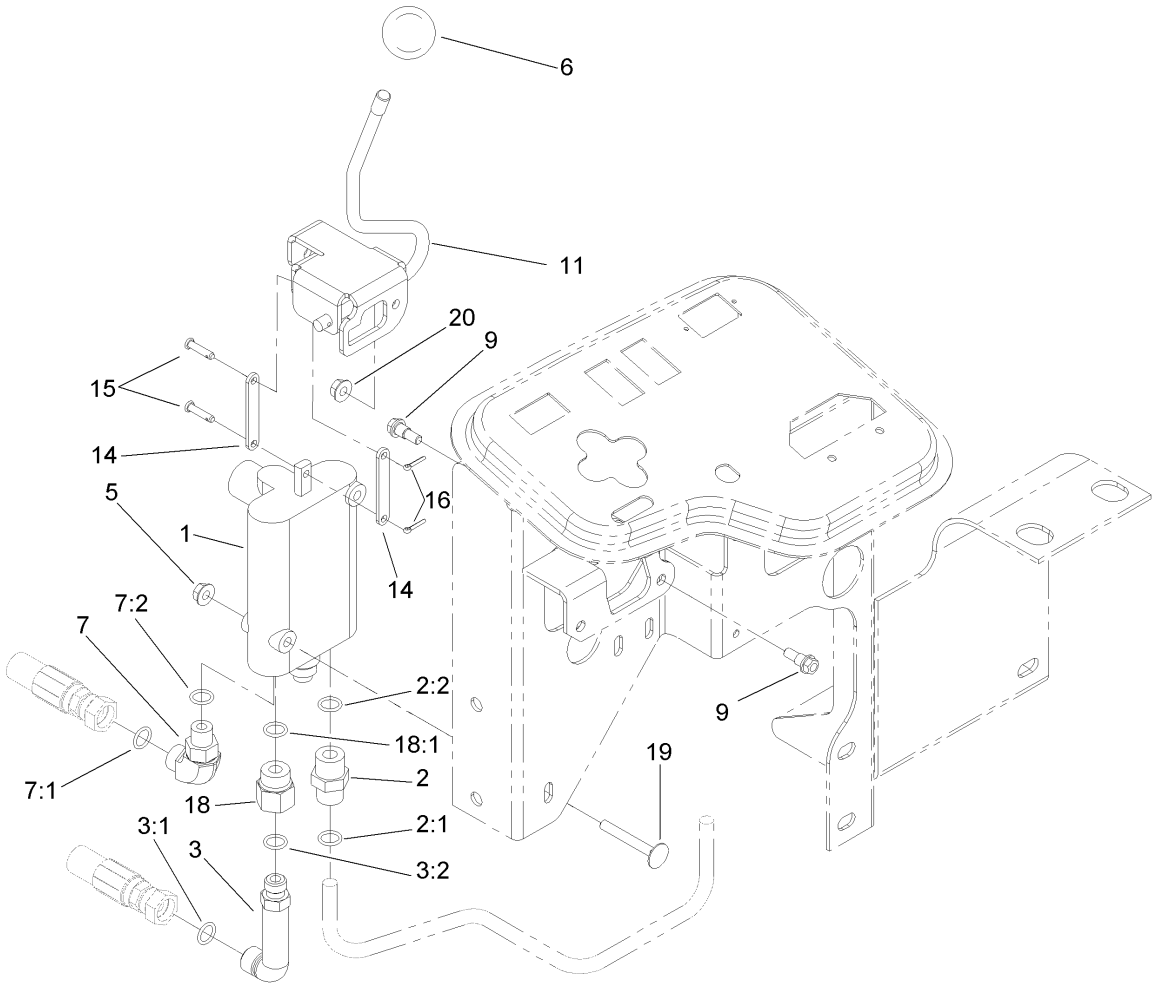


# Control Valve Assembly

| Ref. | Part Number | Qty. | Description |
|---|---|---|---|
| 1 | 95-8689 | 1 | Single Spool Control Valve ASM |
| 2 | 340-3 | 1 | Fitting-Straight |
| 2:1 | 237-22 | 1 | O-Ring |
| 2:2 | 237-79 | 1 | O-Ring |
| 3 | 69-4320 | 1 | Fitting-HYD, 90 DEG |
| 3:1 | 237-22 | 1 | O-Ring |
| 3:2 | 237-42 | 1 | O-Ring |
| 5 | 32128-33 | 2 | Nut-HF |
| 6 | 233-42 | 1 | Knob |
| 7 | 340-77 | 1 | Fitting-Elbow, 90 DEG |
| 7:1 | 237-22 | 1 | O-Ring |
| 7:2 | 237-42 | 1 | O-Ring |
| 9 | 42-3560 | 2 | Bolt-Shoulder |
| 11 | 95-8692 | 1 | Lever ASM |
| 14 | 95-8634 | 2 | Link |
| 15 | 283-16 | 2 | Pin-Clevis |
| 16 | 3272-1 | 2 | Pin-Cotter |
| 18 | 353-397 | 1 | Reducer-Adapter |
| 18:1 | 237-79 | 1 | O-Ring |
| 19 | 3230-33 | 2 | Screw-CARR |
| 20 | 32128-32 | 2 | Nut-HHF |

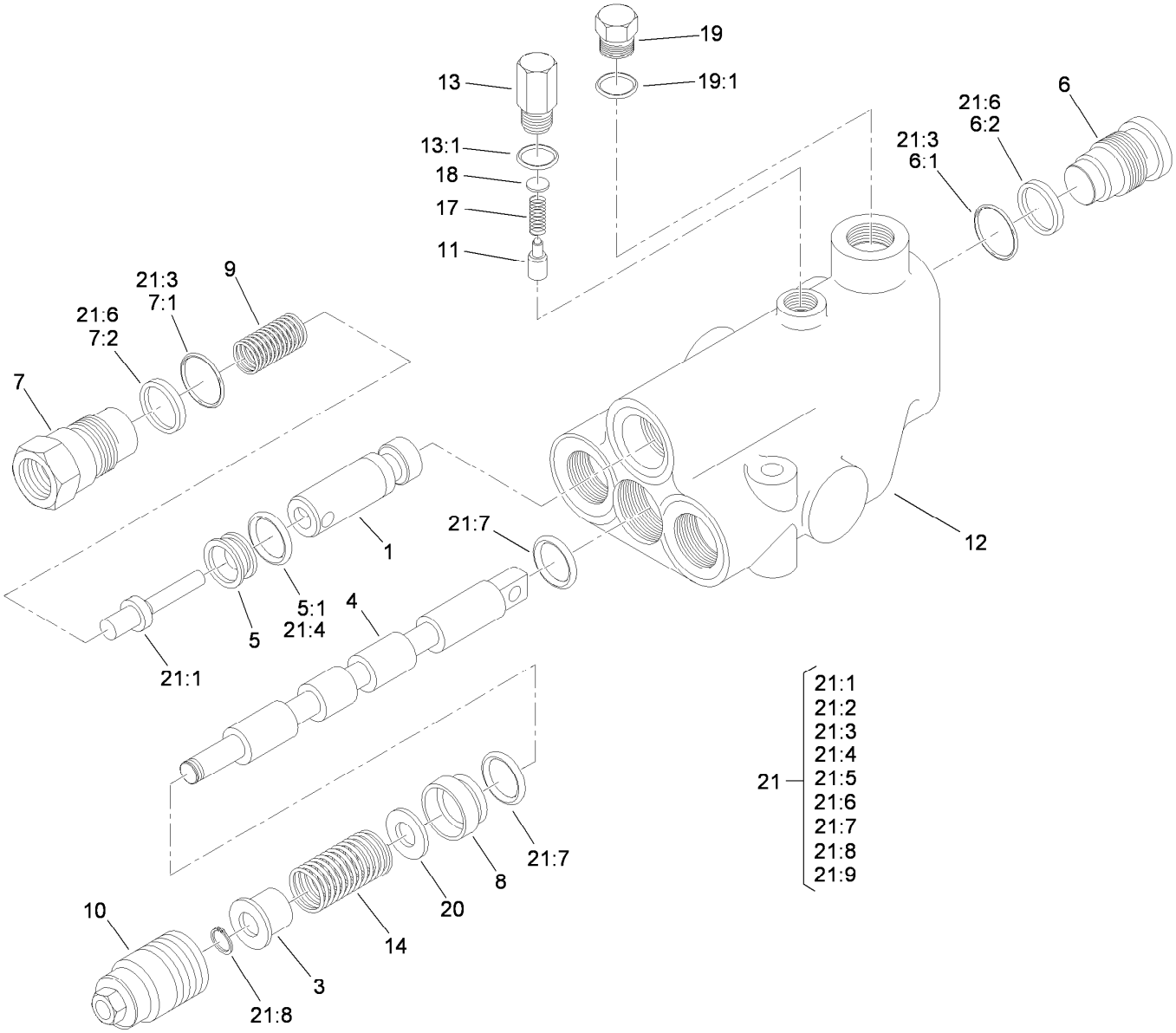


# Single Spool Control Valve Assembly No. 95-8689

| Ref. | Part Number | Qty. | Description |
|---|---|---|---|
| 1 | 99-3586 | 1 | Plunger |
| 3 | 58-6310 | 1 | Spacer |
| 4 | | 1 | Spool ● |
| 5 | 58-6330 | 1 | Seat |
| 5:1 | 58-6340 | 1 | O-Ring |
| 6 | 58-6350 | 1 | Plug |
| 6:1 | 60-5720 | 1 | O-Ring |
| 6:2 | 58-6370 | 1 | Washer |
| 7 | 69-1800 | 1 | Plug ASM |
| 7:1 | 60-5720 | 1 | O-Ring |
| 7:2 | 58-6370 | 1 | Washer |
| 8 | 58-6400 | 1 | Bushing |
| 9 | 69-1810 | 1 | Spring |
| 10 | 58-6420 | 1 | Cap |
| 11 | 99-3585 | 1 | Detent-Plunger |
| 12 | | 1 | Body ● |
| 13 | 99-3588 | 1 | Plug ASM |

| Ref. | Part Number | Qty. | Description |
|---|---|---|---|
| 13:1 | 60-6410 | 1 | O-Ring |
| 14 | 99-3531 | 1 | Spring |
| 17 | 99-3587 | 1 | Spring |
| 18 | 60-6450 | 1 | Disc |
| 19 | 353-989 | 1 | Plug-Hex, Hollow |
| 19:1 | 237-42 | 1 | O-Ring |
| 20 | 65-2770 | 1 | Washer |
| 21 | 99-3589 | 1 | Seal Kit |
| 21:1 | 58-6290 | 2 | Poppet |
| 21:2 | 58-6320 | 1 | Wiper |
| 21:3 | 60-5720 | 2 | O-Ring |
| 21:4 | 58-6340 | 2 | O-Ring |
| 21:5 | 93-6314 | 1 | O-Ring |
| 21:6 | 58-6370 | 2 | Washer |
| 21:7 | 58-6450 | 2 | O-Ring |
| 21:8 | 58-6460 | 1 | Ring-Retaining |
| 21:9 | | 1 | O-Ring ● |

● Not serviced separately

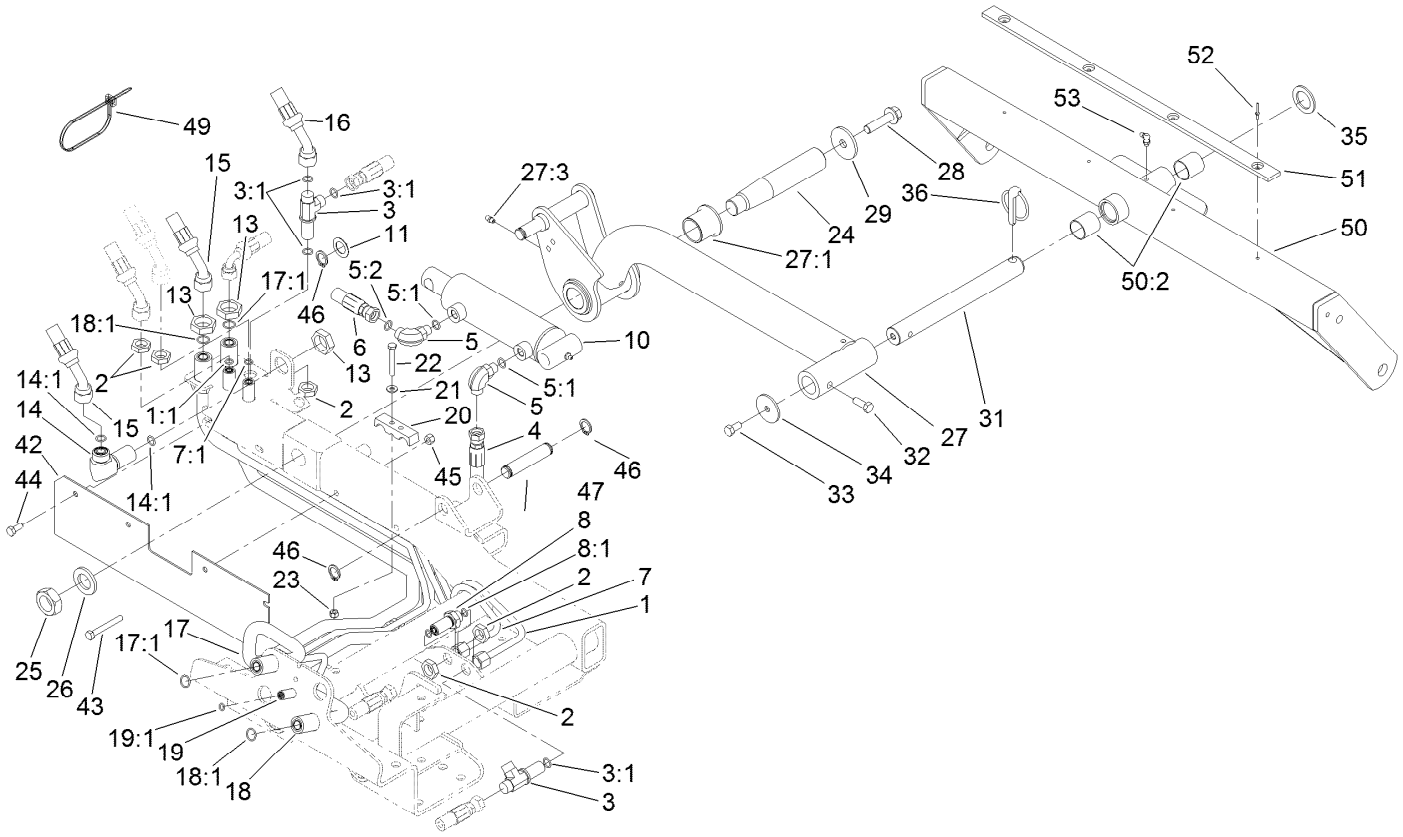


# Rear Lift Arm Assembly

| Ref. | Part Number | Qty. | Description |
|---|---|---|---|
| 1 | 104-0402 | 1 | Tube-HYD |
| 1:1 | 237-22 | 1 | O-Ring |
| 2 | 340-70 | 5 | Nut-Lock |
| 3 | 340-68 | 2 | Fitting-Tee, Bulkhead |
| 3:1 | 237-22 | 3 | O-Ring |
| 4 | 104-0407 | 1 | Hose-HYD |
| 5 | 340-77 | 2 | Fitting-Elbow, 90 DEG |
| 5:1 | 237-22 | 1 | O-Ring |
| 5:2 | 237-42 | 1 | O-Ring |
| 6 | 99-3579 | 1 | Hose-HYD |
| 7 | 104-0403 | 1 | Tube ASM |
| 7:1 | 237-22 | 1 | O-Ring |
| 8 | 340-71 | 1 | Fitting-Straight, Bulkhead |
| 8:1 | 237-22 | 2 | O-Ring |
| 10 | 112-9916 | 1 | HYD Cylinder ASM |
| 11 | 3-6498 | 1 | Washer-Thrust |
| 13 | 340-74 | 3 | Nut-Lock, Bulkhead |
| 14 | 340-72 | 1 | Fitting-Bulkhead, 90 DEG |
| 14:1 | 237-65 | 2 | O-Ring |
| 15 | 108-9004 | 2 | Hose ASM |
| 16 | 115-3412 | 1 | Hose-HYD |

| Ref. | Part Number | Qty. | Description |
|---|---|---|---|
| 17 | 104-0401 | 1 | Tube ASM |
| 17:1 | 237-65 | 2 | O-Ring |
| 18 | 104-0400 | 1 | Tube ASM |
| 18:1 | 237-65 | 2 | O-Ring |
| 19 | 104-0404 | 1 | Tube ASM |
| 19:1 | 237-21 | 1 | O-Ring |
| 20 | 99-3641 | 2 | Clamp-Tube |
| 21 | 3256-22 | 4 | Washer-Flat |
| 22 | 321-11 | 2 | Screw-HH |
| 23 | 3296-42 | 2 | Nut-Lock, NI |
| 24 | 95-8990 | 1 | Shaft-Pivot, Rear |
| 25 | 3220-9 | 1 | Nut-Jam |
| 26 | 86-1480 | 1 | Washer |
| 27 | 115-3473 | 1 | Rear Liftarm ASM |
| 27:1 | 69-6470 | 2 | Bushing-Caster |
| 27:3 | 302-5 | 1 | Fitting-Grease |
| 28 | 3234-27 | 1 | Screw-HHF |
| 29 | 75-7730 | 1 | Washer-Thrust |
| 31 | 100-4944 | 1 | Shaft-Pivot, Cutting Unit |
| 32 | 323-6 | 1 | Screw-HH |
| 33 | 323-4 | 1 | Screw-HH |

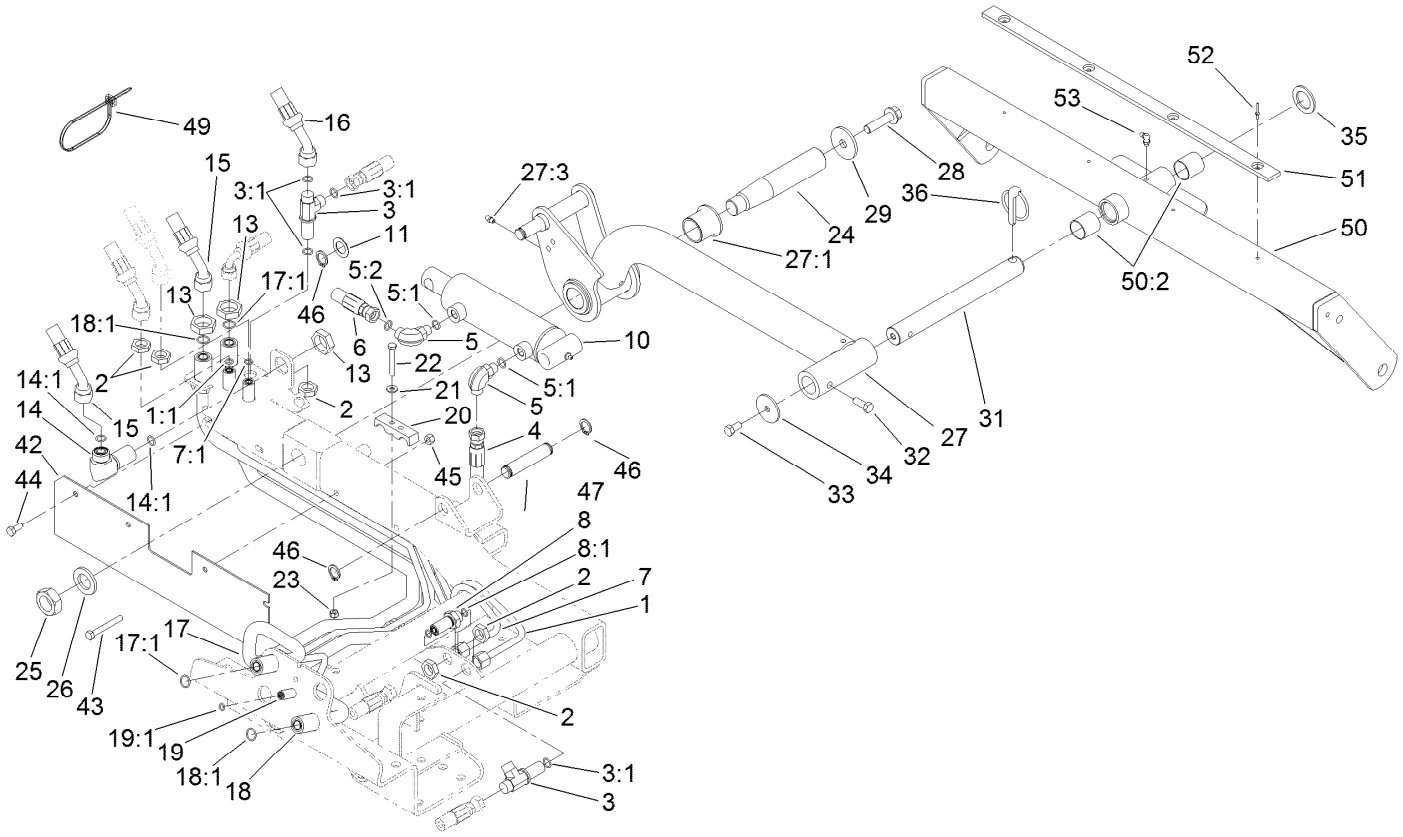


# Rear Lift Arm Assembly (continued)

| Ref. | Part Number | Qty. | Description |
|---|---|---|---|
| 34 | 63-7400 | 1 | Washer-Rebound |
| 35 | 3-6781 | 1 | Washer-Thrust |
| 36 | 283-71 | 1 | Pin-Lynch |
| 42 | 104-0453-03 | 1 | Guard |
| 43 | 322-12 | 2 | Screw-HH |
| 44 | 322-3 | 2 | Screw-HH |
| 45 | 32128-20 | 4 | Nut-HF |
| 46 | 32120-93 | 3 | Ring-Retaining |

| Ref. | Part Number | Qty. | Description |
|---|---|---|---|
| 47 | 95-8575 | 1 | Pin-Clevis |
| 49 | 3334-945 | 2 | Tie-Cable |
| 50 | 104-4229 | 1 | Rear Carrier Frame ASM |
| 50:2 | 108-4000 | 2 | Bushing |
| 51 | 95-8936 | 1 | Strip-Wear |
| 52 | 3269-18 | 4 | Rivet-Blind |
| 53 | 302-60 | 1 | Fitting-Grease |

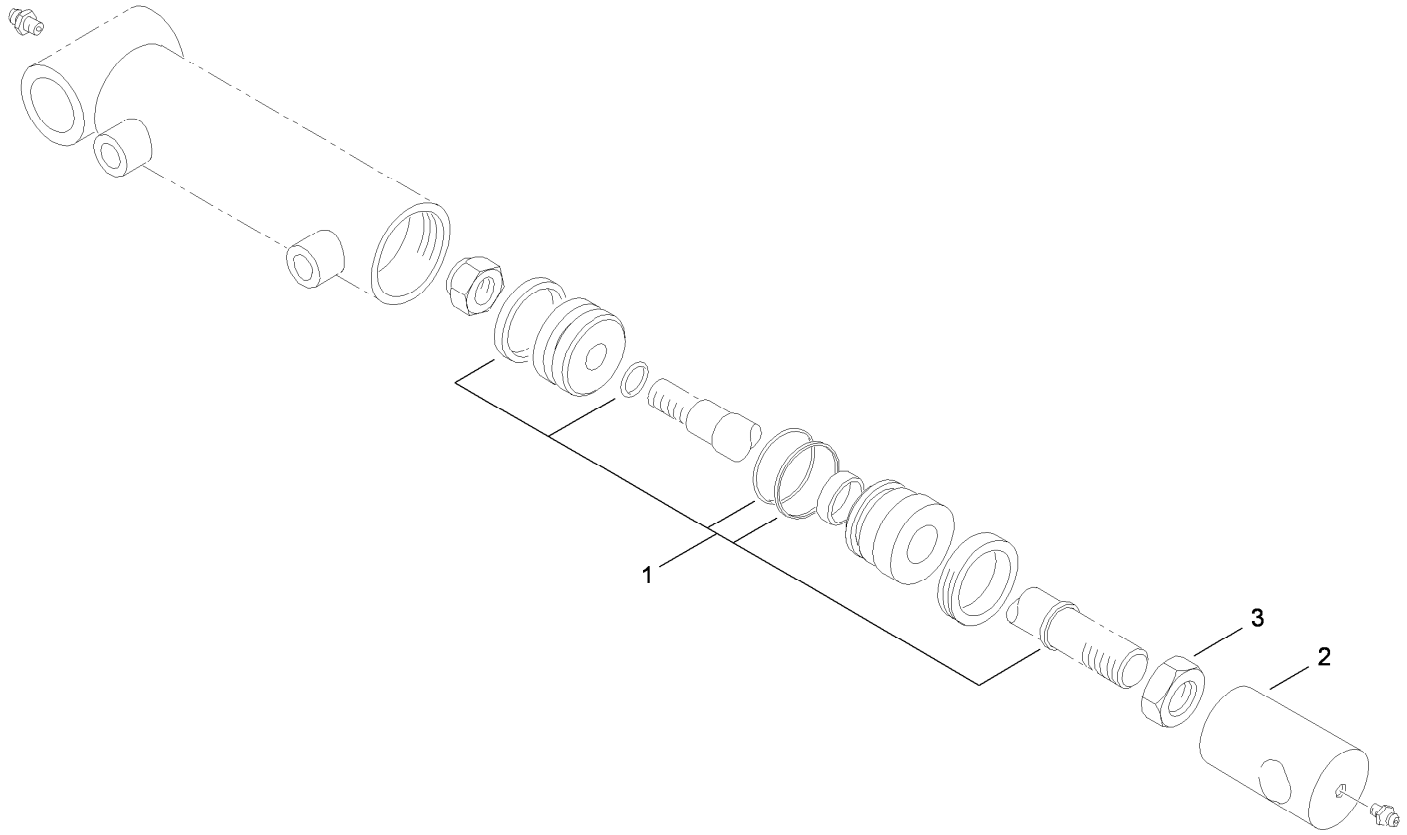


# Hydraulic Cylinder Assembly No. 112-9916

| *Ref.* | *Part Number* | *Qty.* | *Description* |
|---|---|---|---|
| 1 | 115-3410 | 1 | Seal Kit |
| 2 | 108-9035 | 1 | Clevis |
| 3 | 3220-7 | 1 | Nut-Jam |

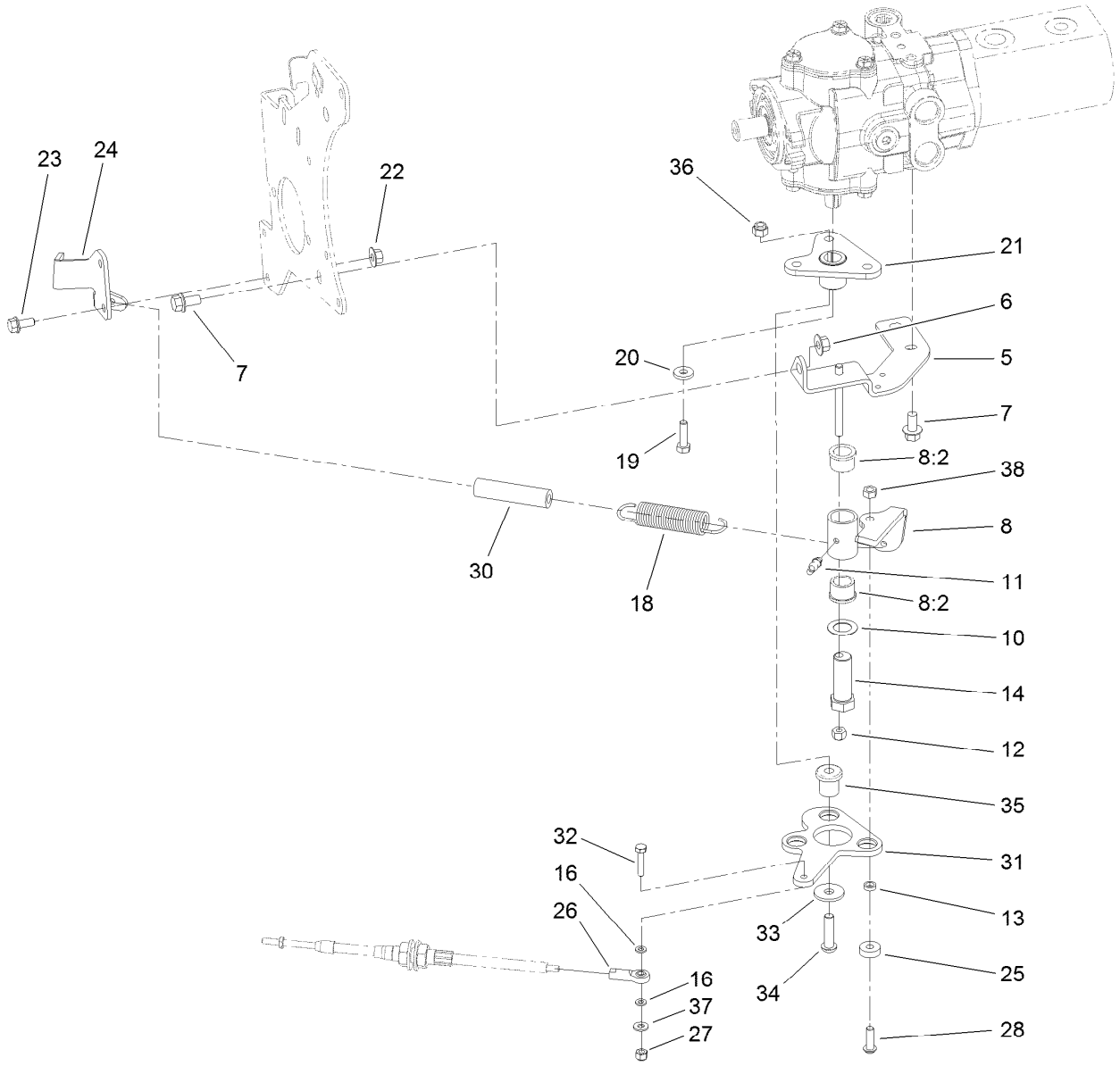


# Neutral Arm Assembly

| Ref. | Part Number | Qty. | Description |
|---|---|---|---|
| 5 | 95-8960-03 | 1 | Bracket-Neutral |
| 6 | 32128-43 | 1 | Nut-Flange |
| 7 | 3234-1 | 3 | Screw-HHF |
| 8 | 104-0422 | 1 | Neutral Arm ASM |
| 8:2 | 256-113 | 2 | Bushing-Flange |
| 10 | 3-6498 | 1 | Washer-Thrust |
| 11 | 302-60 | 1 | Fitting-Grease |
| 12 | 3296-29 | 1 | Nut-Lock, NI |
| 13 | 100-4817 | 1 | Spacer |
| 14 | 76-8640 | 1 | Stud-Traction |
| 16 | 33093-00 | 2 | Washer-Flat |
| 18 | 94-1369 | 1 | Spring-Extension |
| 19 | 3210-6 | 1 | Screw-HH |
| 20 | 88-7200 | 1 | Washer-Flat |
| 21 | 120-5566 | 1 | Hub |
| 22 | 32128-44 | 2 | Nut |

| Ref. | Part Number | Qty. | Description |
|---|---|---|---|
| 23 | 3234-5 | 2 | Screw-HHF |
| 24 | 104-0464-03 | 1 | Bracket-Support, Cable |
| 25 | 251-259 | 1 | Bearing-Ball |
| 26 | 2411-41 | 1 | Rod End-Ball Joint |
| 27 | 3296-42 | 1 | Nut-Lock, NI |
| 28 | 3274-104 | 1 | Screw-HSBH |
| 30 | 99-3556 | 1 | Hose |
| 31 | 99-3594-03 | 1 | Lever-Pump |
| 32 | 321-8 | 1 | Screw-HH |
| 33 | 2844 | 3 | Washer |
| 34 | 95-3857 | 3 | Screw-HSBH |
| 35 | 63-9750 | 3 | Mount |
| 36 | 3296-39 | 3 | Nut-Lock, NI |
| 37 | 3256-22 | 1 | Washer-Flat |
| 38 | 32153-3 | 1 | Nut-Hex, Side Deform |

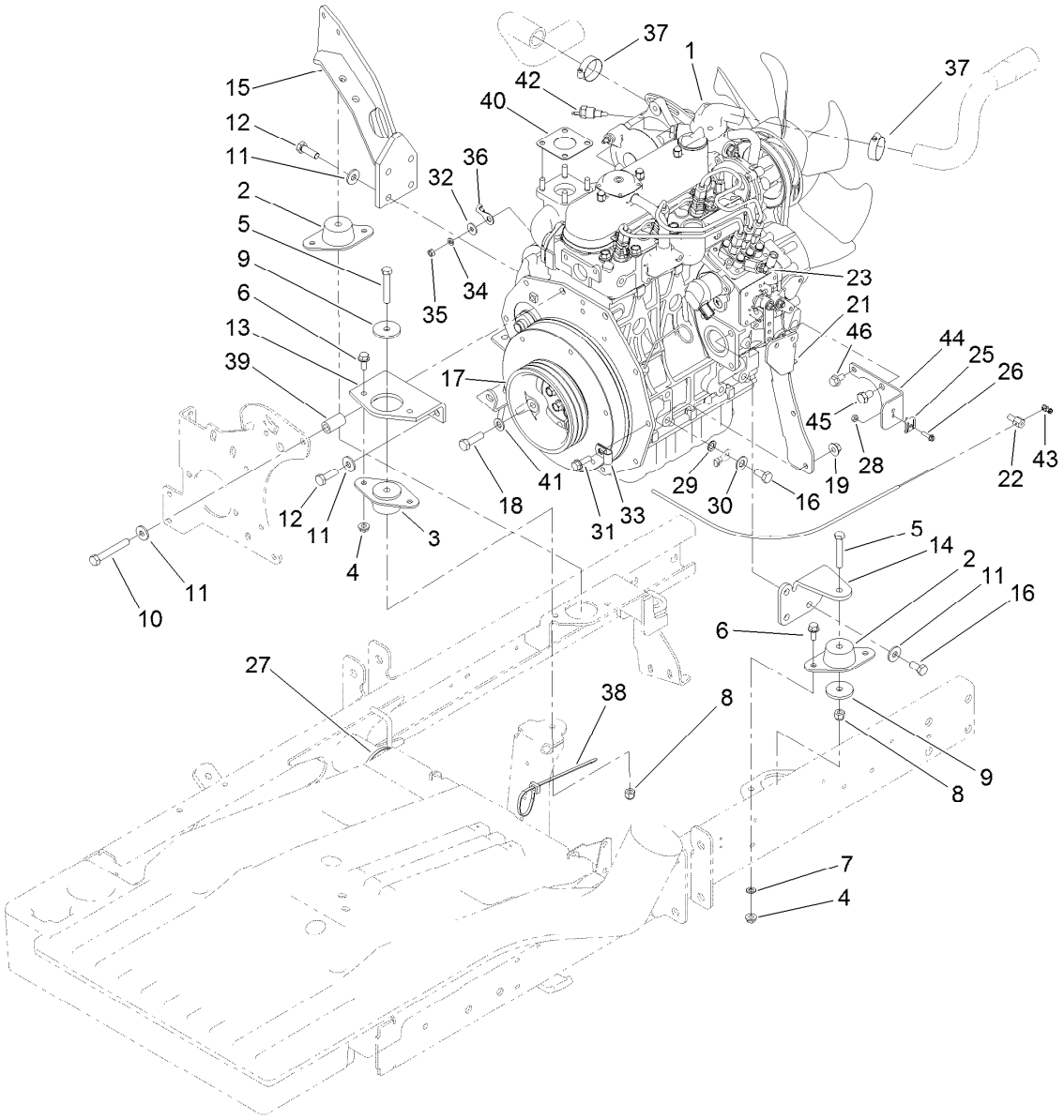


# Engine Assembly

| Ref. | Part Number | Qty. | Description |
|---|---|---|---|
| 1 | 127-9662 | 1 | Engine-Kubota, D1105 |
| 2 | 121-9076 | 2 | Mount-Engine |
| 3 | 93-5265 | 1 | Mount-Engine |
| 4 | 32128-20 | 6 | Nut-HF |
| 5 | 323-11 | 3 | Screw-HH |
| 6 | 3234-5 | 6 | Screw-HHF |
| 7 | 3255-8 | 1 | Washer-Lock |
| 8 | 3296-39 | 3 | Nut-Lock, NI |
| 9 | 80-8560 | 3 | Washer-Hardened |
| 10 | 42-9370 | 1 | Screw-HH |
| 11 | 80-6990 | 9 | Washer-Hardened |
| 12 | 95-8812 | 5 | Screw-HH |
| 13 | 99-3618-03 | 1 | Mount-Engine, Front |
| 14 | 95-8937-03 | 1 | Mount-Engine, LH |
| 15 | 100-4838-03 | 1 | Mount-Engine |
| 16 | 63-7790 | 4 | Screw-Cap |
| 17 | 99-3626 | 1 | Pulley-3V |
| 18 | 56-2140 | 3 | Screw-HH |
| 19 | 32128-44 | 2 | Nut |
| 21 | 115-3487-03 | 1 | Bracket-Mount, Fuel Filter |
| 22 | 98-9311 | 1 | Swivel-Throttle |

| Ref. | Part Number | Qty. | Description |
|---|---|---|---|
| 23 | 3296-20 | 1 | Nut-Lock, NI |
| 25 | 81-1690 | 1 | Clamp-Cable |
| 26 | 32105-13 | 1 | Screw-HWH |
| 27 | 3290-379 | 2 | Tie-Cable |
| 28 | 3296-2 | 1 | Nut-Lock, NI |
| 29 | 3255-9 | 1 | Washer-Lock |
| 30 | 3256-25 | 1 | Washer-Flat |
| 31 | 3234-17 | 2 | Screw-HHF |
| 32 | 3256-78 | 1 | Washer-Flat |
| 33 | 2412-10 | 1 | Clamp-R |
| 34 | 43-5930 | 1 | Washer-Lock, Spring |
| 35 | 48-7890 | 1 | Nut-Hex |
| 36 | 99-3441 | 1 | Harness-Wire, Fusible Link |
| 37 | 2412-34 | 2 | Clamp-Hose |
| 38 | 3290-378 | 14 | Tie-Cable |
| 39 | 95-8736 | 1 | Spacer |
| 40 | 98-9611 | 1 | Gasket |
| 41 | 3256-24 | 3 | Washer-Flat |
| 42 | 106-7772 | 1 | Thermoswitch |
| 43 | 112-9919 | 1 | Stop-Cable, Throttle |
| 44 | 110-9009-03 | 1 | Bracket-Cable, Throttle |

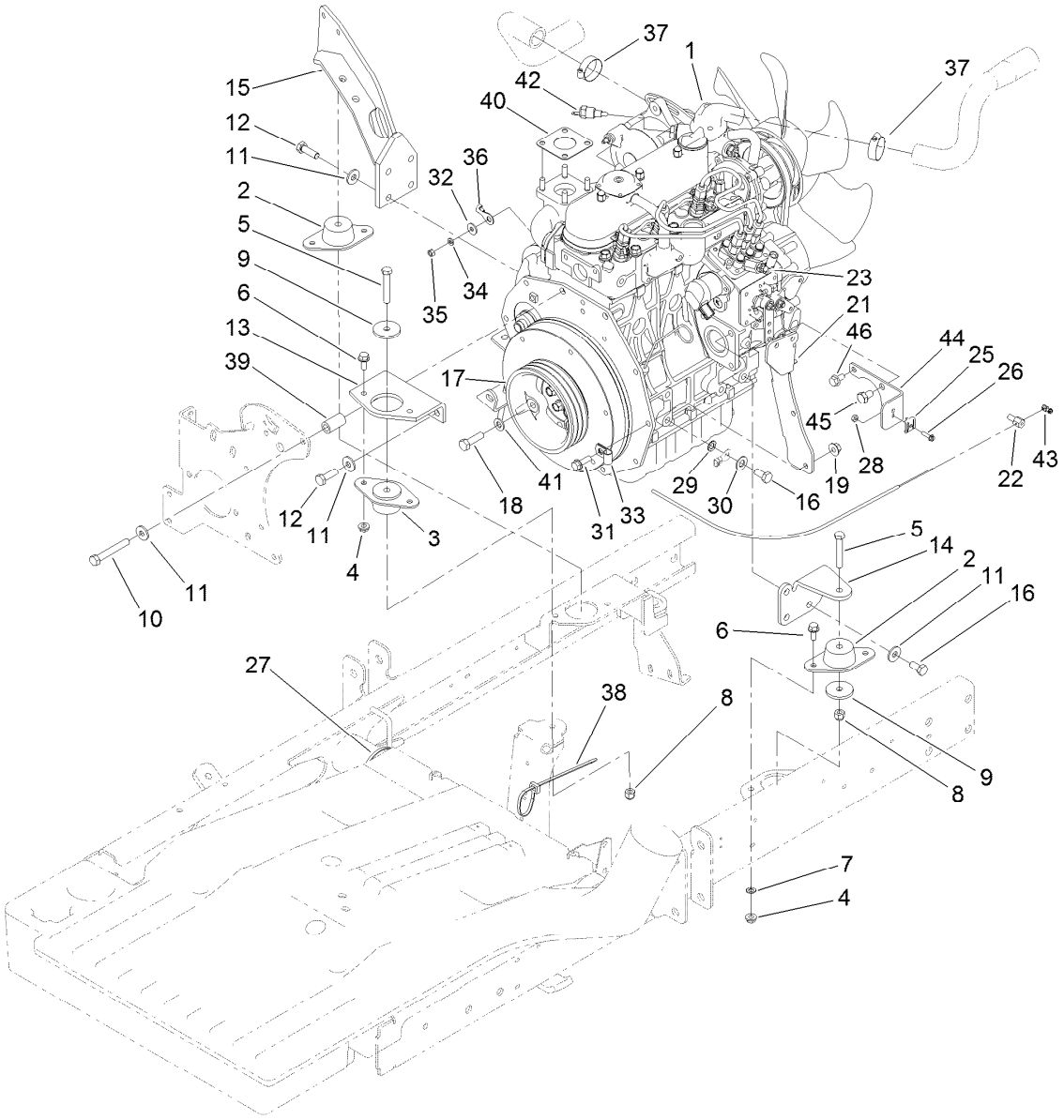


# Engine Assembly (continued)

| Ref. | Part Number | Qty. | Description |
|---|---|---|---|
| 45 | 70-8470 | 1 | Screw-HH |
| 46 | 33104-016 | 1 | Screw-HHF |

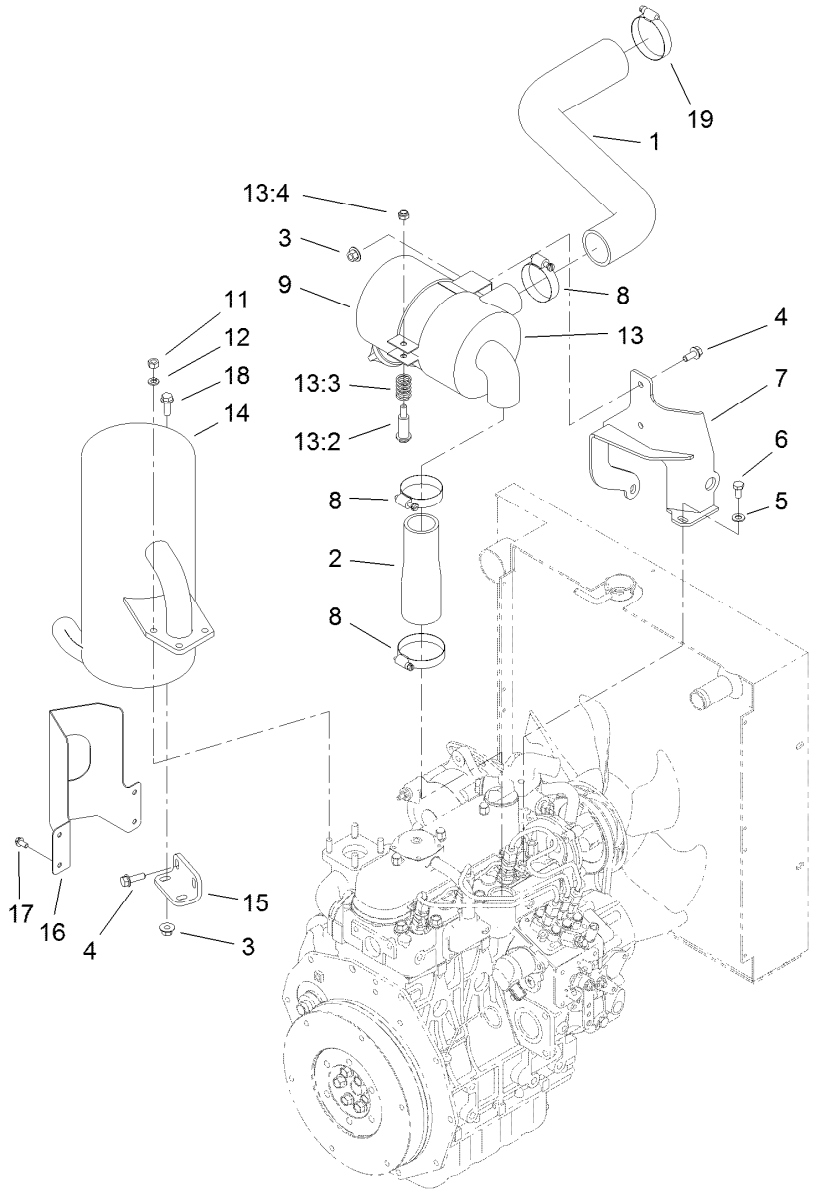


# Air Cleaner and Muffler Assembly

| Ref. | Part Number | Qty. | Description |
|---|---|---|---|
| 1 | 120-3354 | 1 | Hose-Air Inlet, Upper |
| 2 | 95-8947 | 1 | Hose-Air Inlet, Lower |
| 3 | 32128-44 | 6 | Nut |
| 4 | 3234-5 | 3 | Screw-HHF |
| 5 | 3256-23 | 2 | Washer-Plain |
| 6 | 33114-016 | 2 | Screw-HH |
| 7 | 99-3355-03 | 1 | Bracket-Filter, Air |
| 8 | 2412-92 | 3 | Clamp-Hose |
| 9 | 93-2190 | 1 | Air Cleaner ASM |
| 11 | 33014-00 | 4 | Nut-Hex |
| 12 | 3253-4 | 4 | Washer-Lock |

| Ref. | Part Number | Qty. | Description |
|---|---|---|---|
| 13 | 93-2191 | 1 | Air Cleaner Mounting Band ASM |
| 13:2 | 94-3653 | 1 | Bolt |
| 13:3 | 94-3654 | 1 | Spring |
| 13:4 | 48-9510 | 1 | Nut |
| 14 | 104-4834 | 1 | Muffler |
| 15 | 95-8943-03 | 1 | Bracket-Muffler |
| 16 | 99-3425-03 | 1 | Guard-Exhaust |
| 17 | 32144-4 | 4 | Screw-HWH |
| 18 | 3234-17 | 3 | Screw-HHF |
| 19 | 2412-130 | 1 | Clamp-Hose |

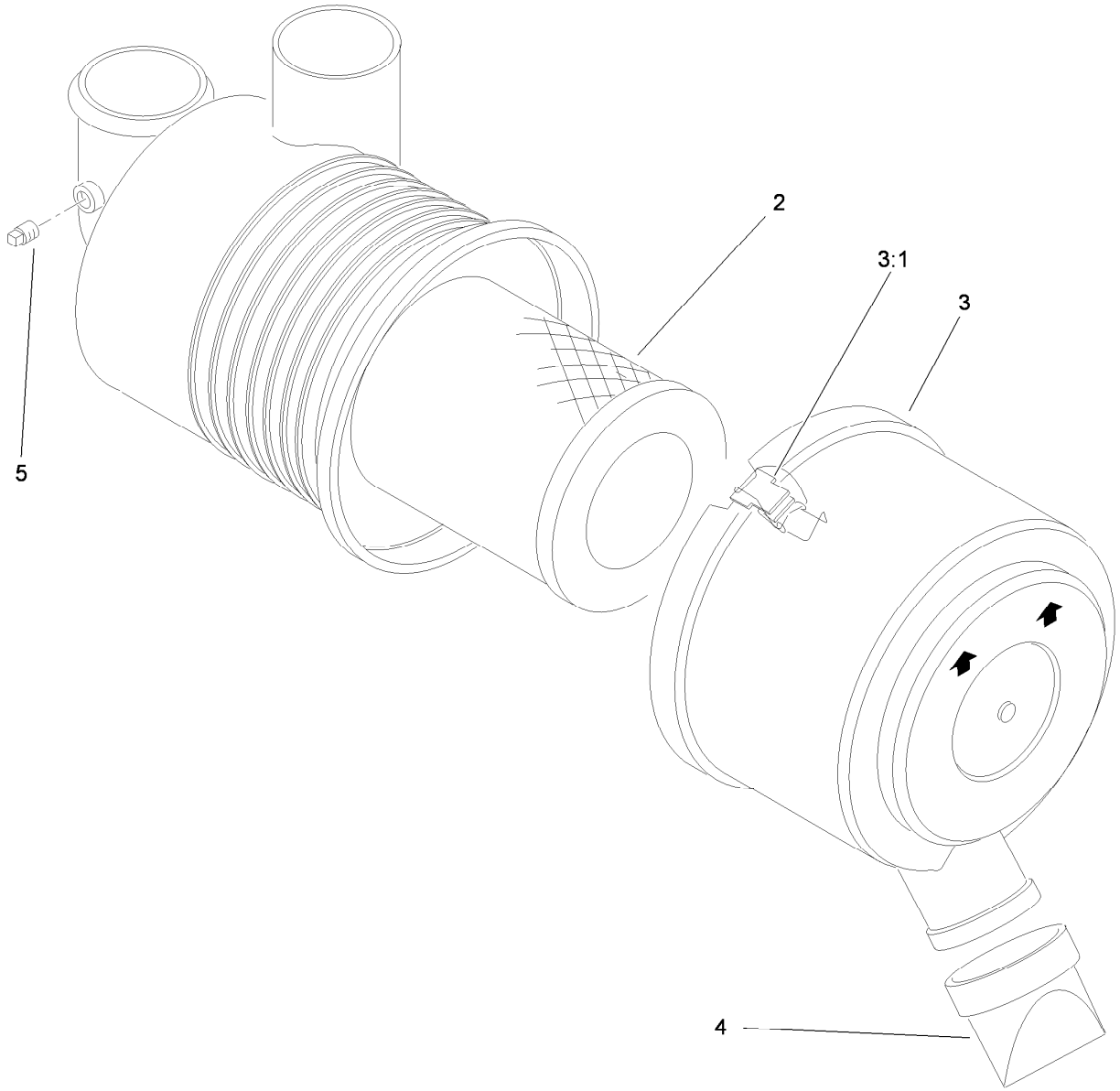


# Air Cleaner Assembly No. 93-2190

| *Ref.* | *Part Number* | *Qty.* | *Description* |
|---|---|---|---|
| 2 | 108-3811 | 1 | Filter-Air |
| 3 | 94-3652 | 1 | Cover ASM |
| 3:1 | 1-643283 | 2 | Latch-Cleaner, Air |
| 4 | 87-9400 | 1 | Valve-Vacuator |
| 5 | 285-17 | 1 | Plug-Pipe |

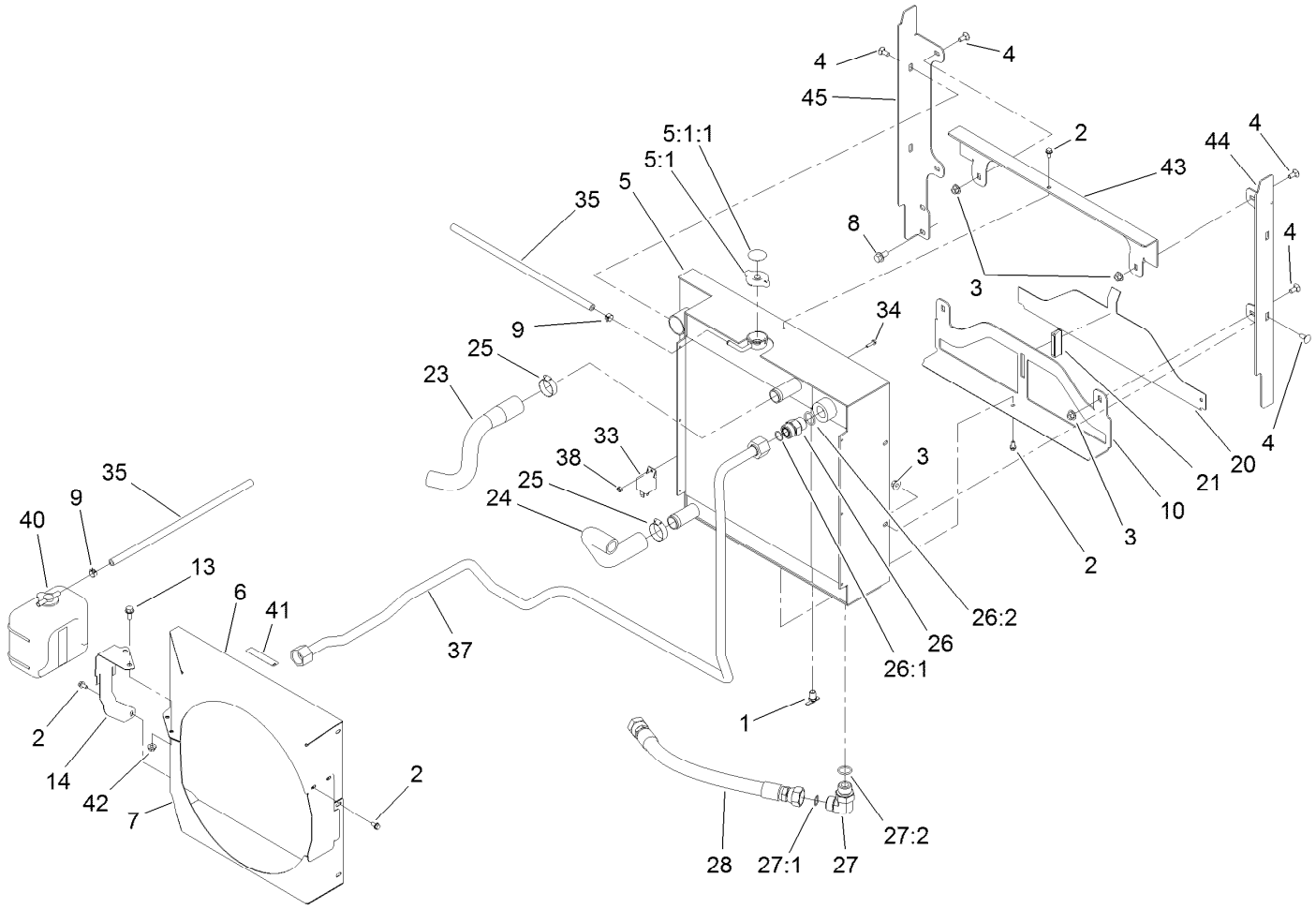


# Radiator Assembly

| Ref. | Part Number | Qty. | Description |
|---|---|---|---|
| 1 | 304-46 | 1 | Draincock |
| 2 | 32104-116 | 10 | Screw-HWHTF |
| 3 | 32128-44 | 8 | Nut |
| 4 | 3230-1 | 8 | Bolt-CARR |
| 5 | 119-2028 | 1 | Radiator And Oil Cooler ASM |
| 5:1 | 115-7766 | 1 | Cap-Radiator |
| 5:1:1 | 106-6755 | 1 | Decal-Cap, Radiator |
| 6 | 121-3556-03 | 1 | Shroud-Fan, Upper |
| 7 | 121-3552-03 | 1 | Shroud-Fan, Lower |
| 8 | 3234-1 | 4 | Screw-HHF |
| 9 | 92-2379 | 2 | Clamp-Hose |
| 10 | 120-3530-03 | 1 | Bracket-Radiator, Bottom |
| 13 | 3234-5 | 2 | Screw-HHF |
| 14 | 121-3557-03 | 1 | Bracket-Resevoir |
| 20 | 95-8702-03 | 1 | Shield-Radiator, Lower |
| 21 | 99-3497 | 1 | Magnet |
| 23 | 121-3558 | 1 | Hose-Radiator, Upper |
| 24 | 120-3399 | 1 | Hose-Radiator, Lower |

| Ref. | Part Number | Qty. | Description |
|---|---|---|---|
| 25 | 2412-34 | 2 | Clamp-Hose |
| 26 | 340-9 | 1 | Fitting-STR |
| 26:1 | 237-58 | 1 | O-Ring |
| 26:2 | 237-81 | 1 | O-Ring |
| 27 | 340-142 | 1 | Fitting-Elbow, 90 DEG |
| 27:1 | 237-58 | 1 | O-Ring |
| 27:2 | 237-81 | 1 | O-Ring |
| 28 | 92-7536 | 1 | Hose-HYD |
| 33 | 99-7435 | 1 | Relay |
| 34 | 32105-13 | 1 | Screw-HWH |
| 35 | 109-0274 | 1 | Hose-Fuel |
| 37 | 121-3568 | 1 | Tube-HYD |
| 38 | 3296-2 | 1 | Nut-Lock, NI |
| 40 | 104-9318 | 1 | Bottle-Overflow |
| 41 | 93-6681 | 1 | Decal-Warning, Fan |
| 42 | 32128-20 | 2 | Nut-HF |
| 43 | 120-3529-03 | 1 | Bracket-Radiator, Top |
| 44 | 120-3531-03 | 1 | Bracket-Radiator, LH |
| 45 | 120-3532-03 | 1 | Bracket-Radiator, RH |

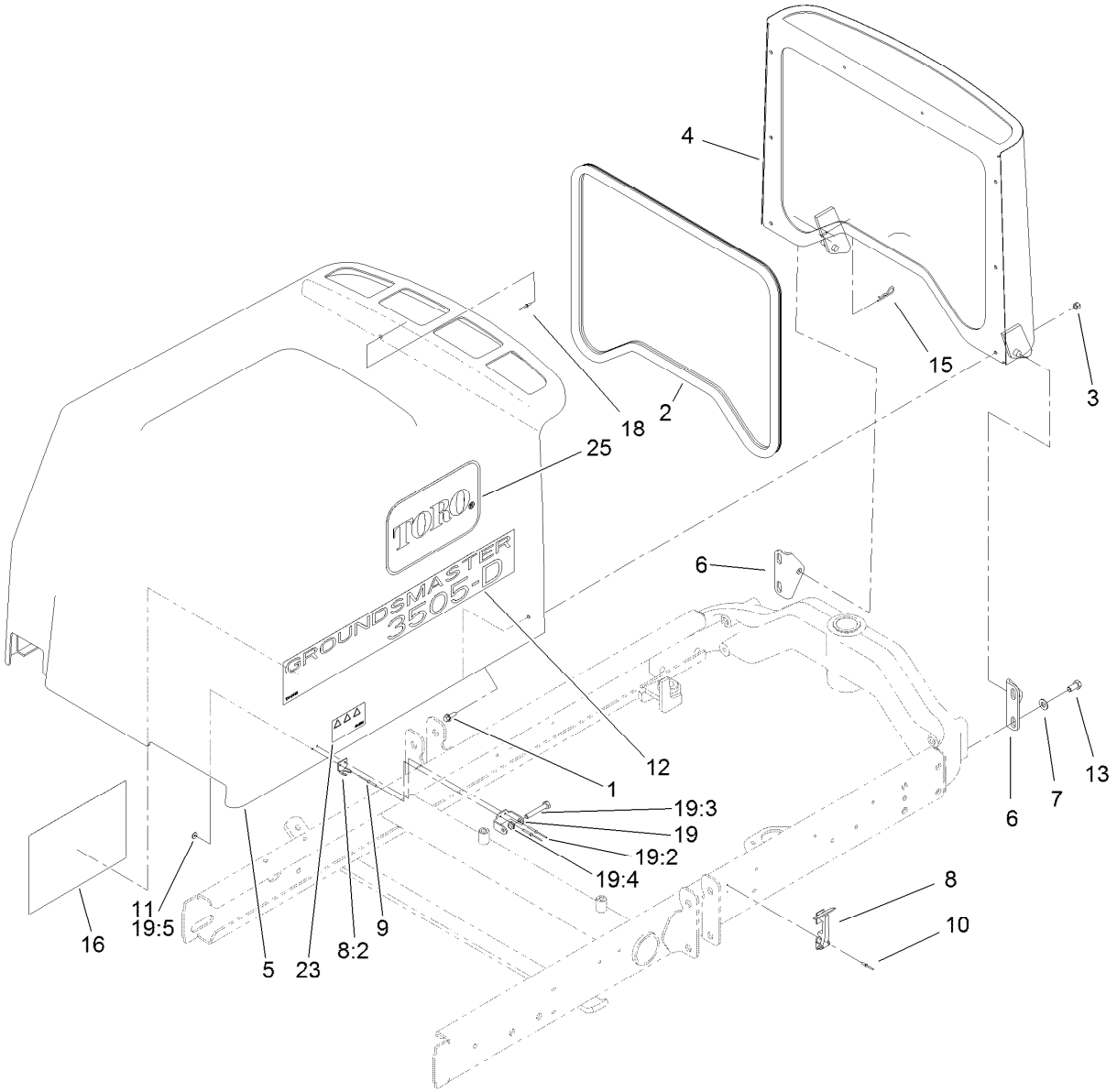


# Hood Assembly

| Ref. | Part Number | Qty. | Description |
|---|---|---|---|
| 1 | 3234-4 | 6 | Screw-HHF |
| 2 | 100-4932 | 1 | Trim-Seal |
| 3 | 3296-42 | 6 | Nut-Lock, NI |
| 4 | 104-4853-03 | 1 | Screen-Hood |
| 5 | 100-4855 | 1 | Hood |
| 5:1 | 106-8115 | 1 | Heat Tape Repair Kit ● |
| 6 | 95-8728 | 2 | Bracket-Pivot, Hood |
| 7 | 3256-24 | 8 | Washer-Flat |
| 8 | 59-9740 | 2 | Flex Draw Latch ASM |
| 8:2 | 249-40 | 1 | Keeper |
| 9 | 107-0333 | 4 | Rivet-Pop |
| 10 | 3290-55 | 4 | Rivet-Pop |
| 11 | 3269-10 | 4 | Washer-Back |

| Ref. | Part Number | Qty. | Description |
|---|---|---|---|
| 12 | 108-9007 | 2 | Decal-Hood |
| 13 | 323-6 | 4 | Screw-HH |
| 15 | 3290-467 | 1 | Pin-Hair |
| 16 | 117-5103 | 1 | Decal-Service |
| 18 | 3269-21 | 2 | Rivet-Pop |
| 19 | 119-2004 | 1 | CE Latch Kit |
| 19:2 | 107-0333 | 2 | Rivet-Pop |
| 19:3 | 322-10 | 1 | Screw-HH |
| 19:4 | 3296-47 | 1 | Nut-Lock,NI |
| 19:5 | 3269-10 | 2 | Washer-Back |
| 23 | 106-6754 | 1 | Decal-Danger |
| 25 | 66-6140 | 2 | Decal |

● Not illustrated

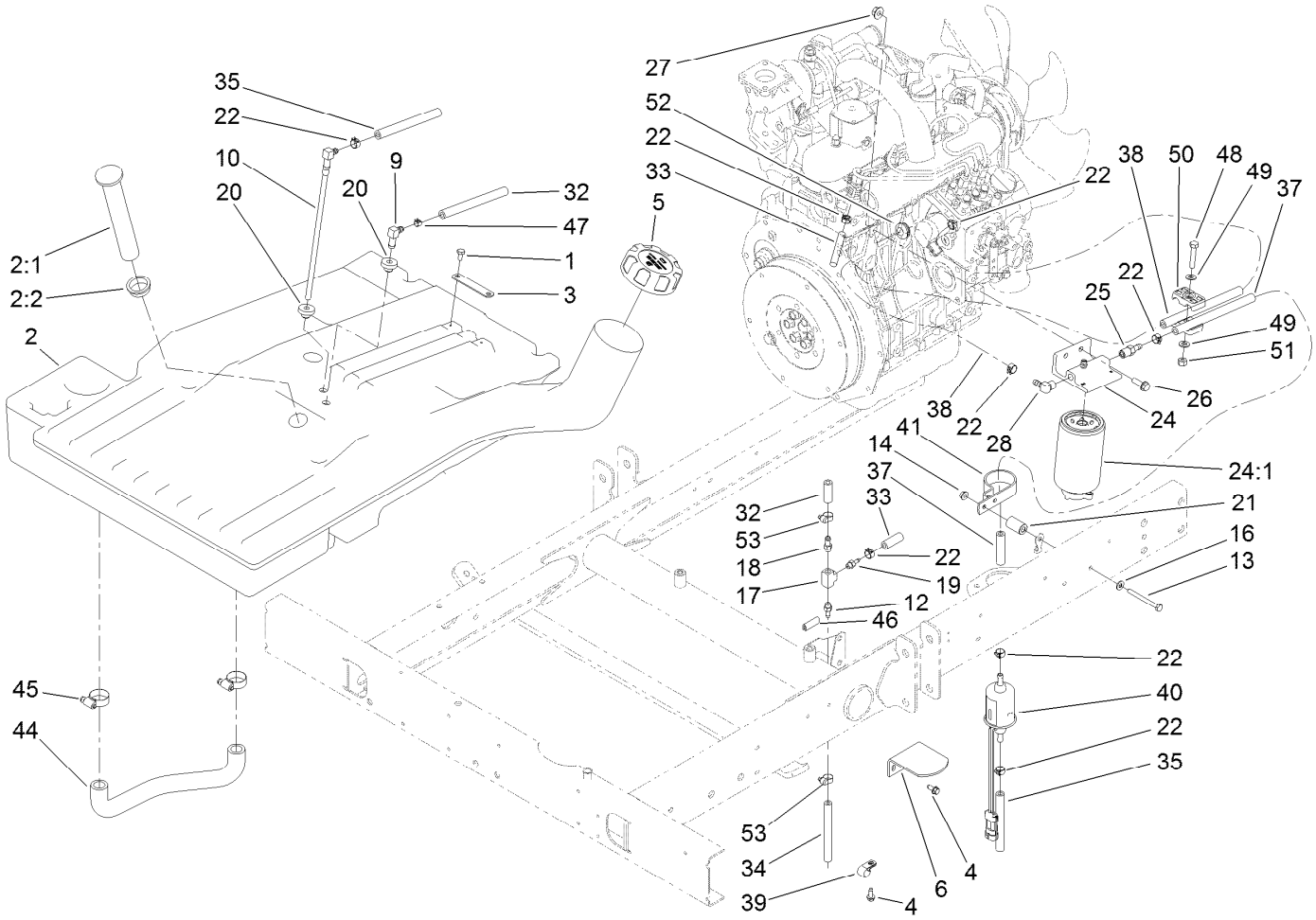


# Fuel System Assembly

| Ref. | Part Number | Qty. | Description |
|---|---|---|---|
| 1 | 321-2 | 2 | Screw-HH |
| 2 | 105-7865 | 1 | Tank-Fuel |
| 2:1 | 95-8971 | 1 | Gauge-Fuel |
| 2:2 | 95-8972 | 1 | Grommet |
| 3 | 95-8881 | 1 | Strap-Line, Fuel |
| 4 | 32144-10 | 3 | Screw-HWH |
| 5 | 114-5064 | 1 | Cap-Diesel |
| 6 | 95-8968-03 | 1 | Support-Tank, Fuel |
| 9 | 46-6550 | 1 | Fitting-Elbow, 90 DEG |
| 10 | 110-9689 | 1 | Pipe-Stand |
| 12 | 304-73 | 1 | Fitting-Straight |
| 13 | 321-14 | 1 | Screw-HH |
| 14 | 32128-33 | 1 | Nut-HF |
| 16 | 3256-22 | 1 | Washer-Flat |
| 17 | 354-20 | 1 | Fitting-Tee |
| 18 | 354-21 | 1 | Fitting-Barbed |
| 19 | 354-22 | 1 | Fitting-Barbed |
| 20 | 46-6560 | 2 | Bushing |
| 21 | 77-3180 | 1 | Spacer |
| 22 | 92-2379 | 7 | Clamp-Hose |
| 24 | 110-9044 | 1 | Separator-Filter |

| Ref. | Part Number | Qty. | Description |
|---|---|---|---|
| 24:1 | 110-9049 | 1 | Filter-Spin On, Fuel/Water |
| 25 | 353-783 | 1 | Fitting-STR |
| 26 | 3234-17 | 2 | Screw-HHF |
| 27 | 32128-44 | 2 | Nut |
| 28 | 353-781 | 1 | Fitting-HYD, 90 |
| 32 | 110-6187 | 1 | Hose-Fuel |
| 33 | 110-8751 | 1 | Hose-Fuel |
| 34 | 110-5701 | 1 | Hose-Fuel |
| 35 | 110-4100 | 1 | Hose-Fuel |
| 37 | 110-4109 | 1 | Hose-Fuel |
| 38 | 110-4113 | 1 | Hose-Fuel |
| 39 | 2412-73 | 1 | Clamp-R |
| 40 | 110-8806 | 1 | Pump-Fuel |
| 41 | 110-8817 | 1 | Bracket-Pump, Fuel |
| 44 | 105-4094 | 1 | Hose-Formed |
| 45 | 2412-129 | 2 | Clamp-Hose |
| 46 | 110-8754 | 1 | Trim |
| 47 | 2412-80 | 2 | Clamp-Hose |
| 48 | 322-8 | 1 | Screw-HH |
| 49 | 3256-23 | 2 | Washer-Plain |
| 50 | 56-7971 | 2 | Clamp-Tube |

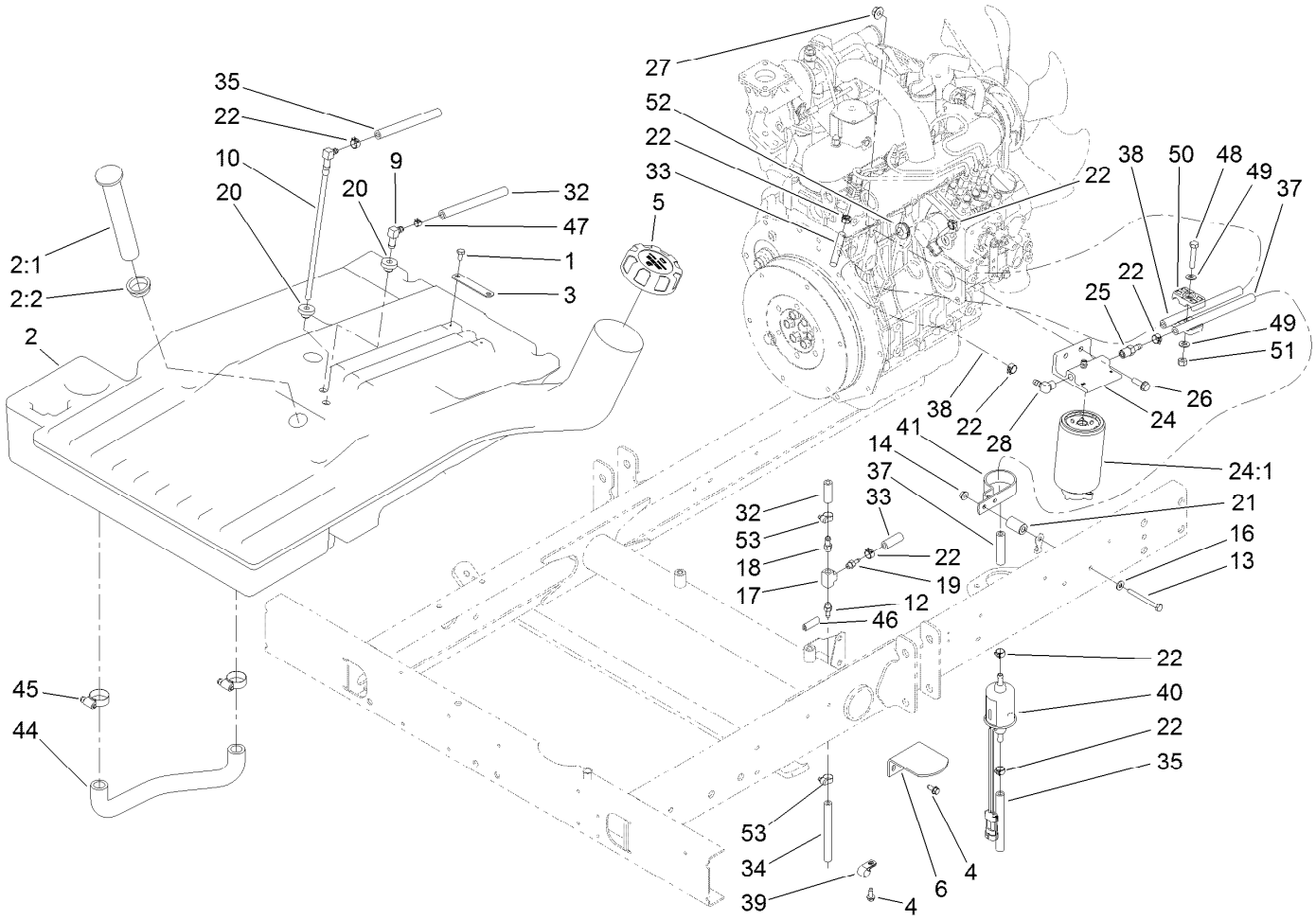


# Fuel System Assembly (continued)

| Ref. | Part Number | Qty. | Description |
|---|---|---|---|
| 51 | 3296-29 | 1 | Nut-Lock, NI |

| Ref. | Part Number | Qty. | Description |
|---|---|---|---|
| 52 | 1-543296 | 1 | Grommet |
| 53 | 2412-108 | 2 | Clamp-Worm |

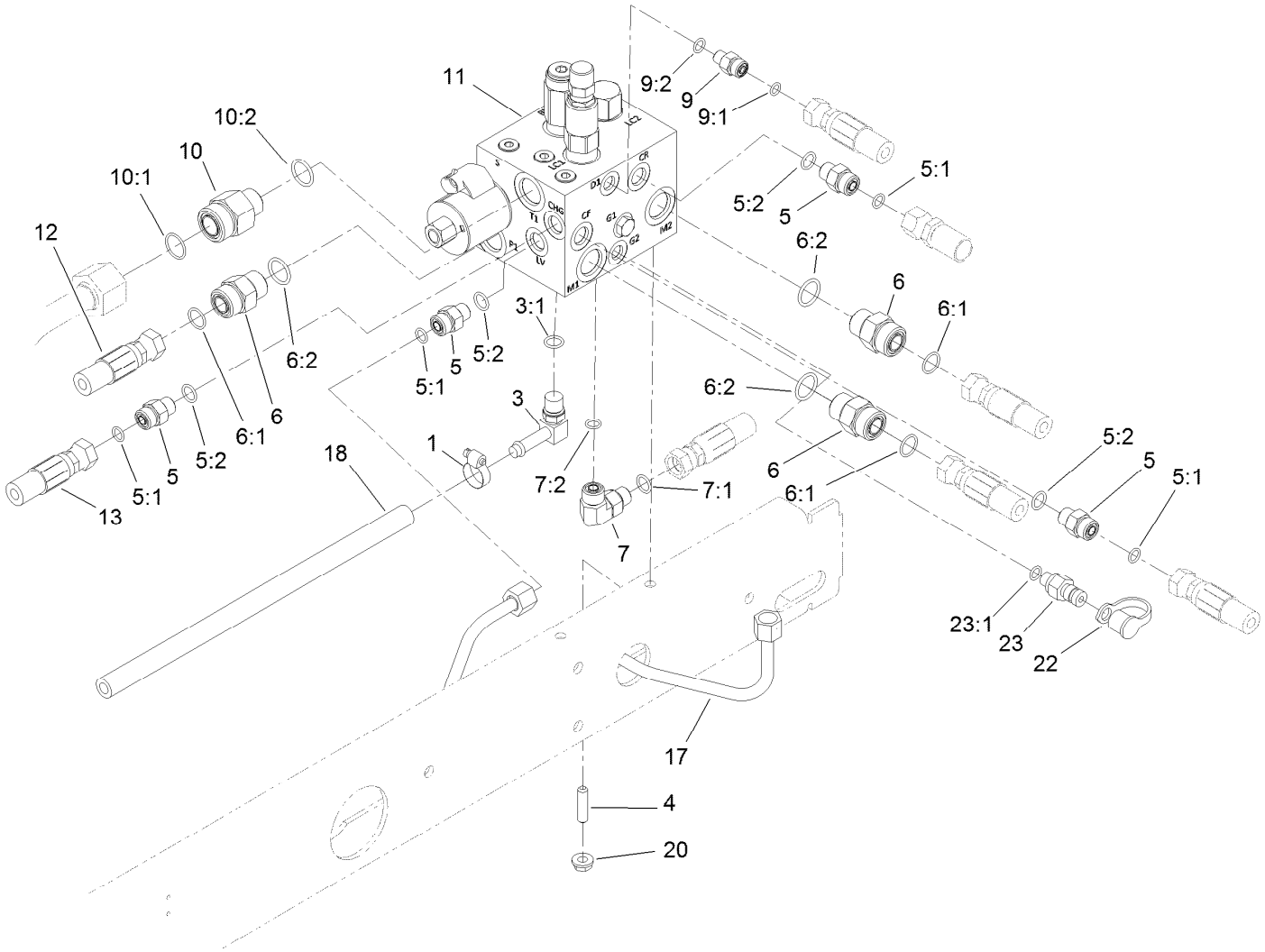


# Manifold Block Installation Assembly

| Ref. | Part Number | Qty. | Description |
|---|---|---|---|
| 1 | 2412-36 | 1 | Clamp-Hose |
| 3 | 100-4887 | 1 | Fitting-Elbow, 90 |
| 3:1 | 237-42 | 1 | O-Ring |
| 4 | 104-0430 | 2 | Stud |
| 5 | 340-2 | 4 | Fitting-Straight |
| 5:1 | 237-22 | 1 | O-Ring |
| 5:2 | 237-42 | 1 | O-Ring |
| 6 | 340-7 | 3 | Fitting-Straight |
| 6:1 | 237-65 | 1 | O-Ring |
| 6:2 | 237-80 | 1 | O-Ring |
| 7 | 340-77 | 1 | Fitting-Elbow, 90 DEG |
| 7:1 | 237-22 | 1 | O-Ring |
| 7:2 | 237-42 | 1 | O-Ring |
| 9 | 340-92 | 1 | Fitting-Straight |

| Ref. | Part Number | Qty. | Description |
|---|---|---|---|
| 9:1 | 237-78 | 1 | O-Ring |
| 9:2 | 237-21 | 1 | O-Ring |
| 10 | 340-66 | 1 | Fitting-Straight |
| 10:1 | 237-80 | 1 | O-Ring |
| 10:2 | 237-58 | 1 | O-Ring |
| 11 | 121-3570 | 1 | Manifold ASM |
| 12 | 104-0488 | 1 | Hose-HYD |
| 13 | 92-7595 | 1 | Hose-HYD |
| 17 | 108-9005 | 1 | Tube ASM |
| 18 | 80-7342 | 1 | Hose-HYD |
| 20 | 32128-20 | 2 | Nut-HF |
| 22 | 354-79 | 1 | Cap-Dust |
| 23 | 354-77 | 1 | Fitting-Quick |
| 23:1 | 237-78 | 1 | O-Ring |

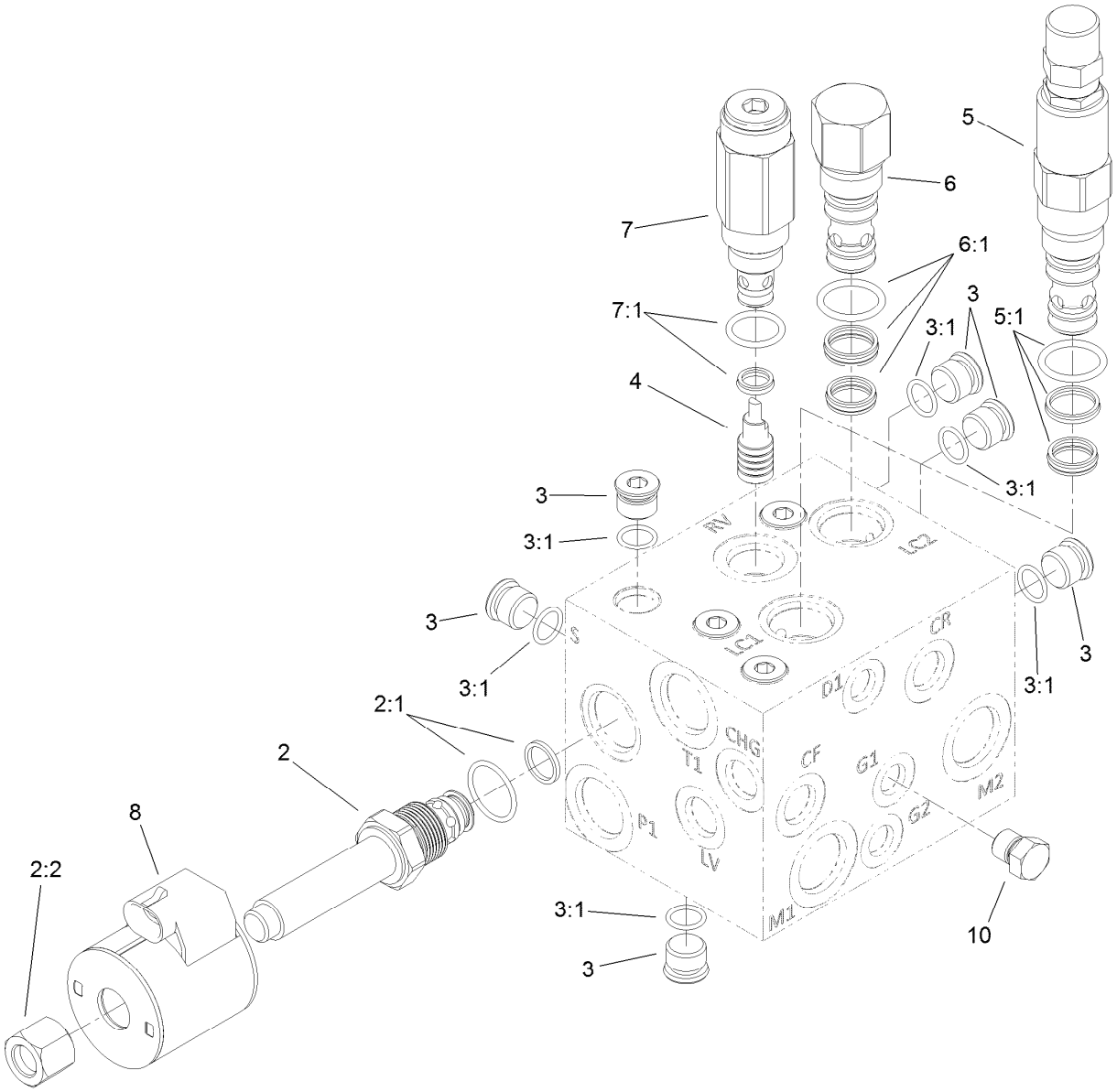


# Hydraulic Manifold Assembly No. 121-3570

| *Ref.* | *Part Number* | *Qty.* | *Description* |
|---|---|---|---|
| 2 | 110-8768 | 1 | Valve-Relief, Solenoid (3000 PSI) |
| 2:1 | 110-6316 | 1 | Seal Kit ● |
| 2:2 | 130-8180 | 1 | Nut-Coil |
| 3 | 353-512 | 9 | Plug |
| 3:1 | 237-78 | 1 | O-Ring |
| 4 | 105-9157 | 1 | Piston-Pilot |
| 5 | 119-2011 | 1 | Valve-Logic, Adjustable |
| 5:1 | 119-2159 | 1 | Seal Kit |
| 6 | 105-9153 | 1 | Element-Logic, Vented |
| 6:1 | 119-2159 | 1 | Seal Kit |
| 7 | 112-5259 | 1 | Valve-Relief |
| 7:1 | 105-9156 | 1 | Seal Kit |
| 8 | 110-6344 | 1 | Coil-12V, DC |
| 10 | 117-0115 | 1 | Plug |

● Not illustrated

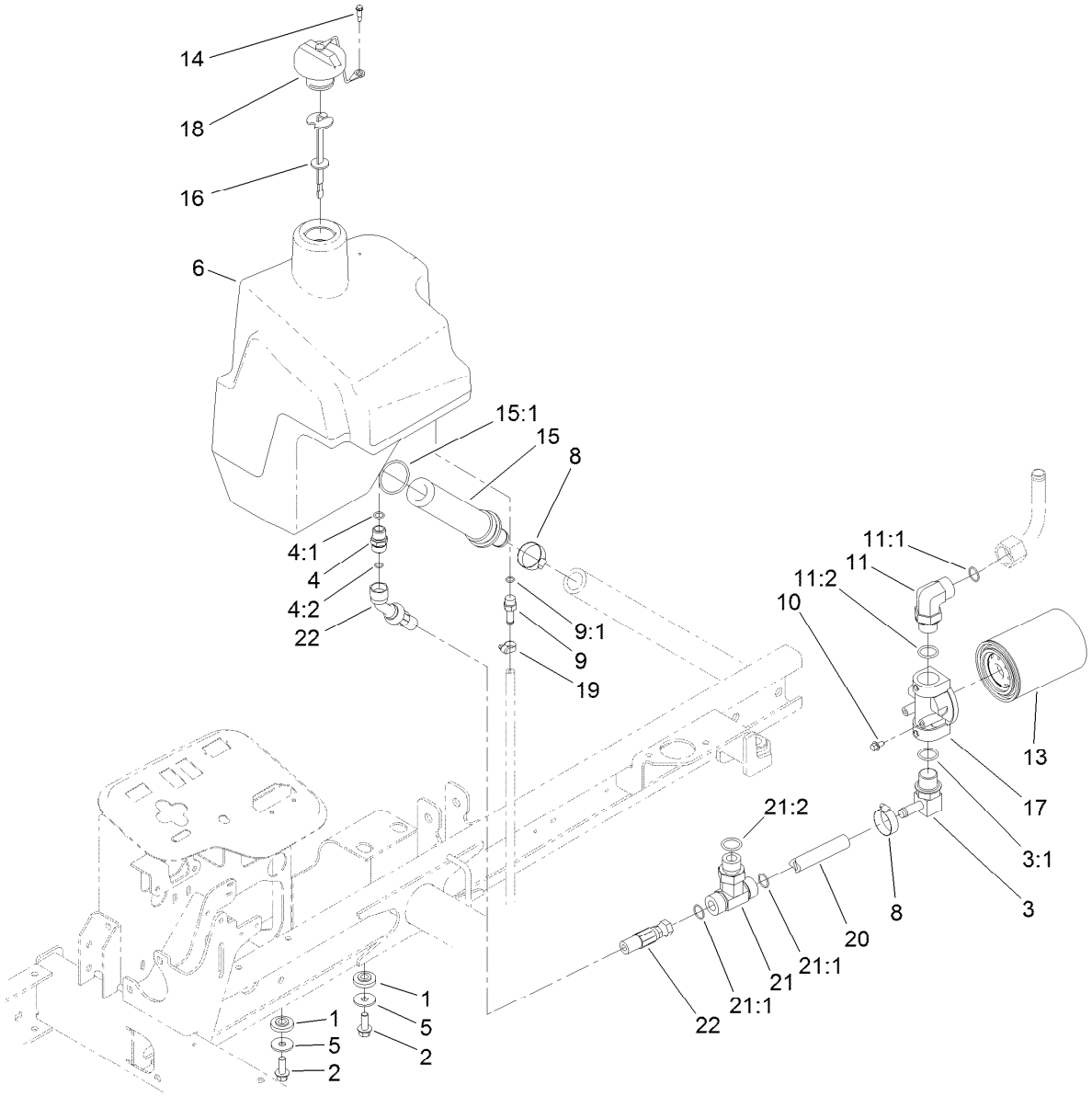


# Hydraulic Tank Assembly

| Ref. | Part Number | Qty. | Description |
|---|---|---|---|
| 1 | 240-11 | 4 | Bushing-Flange |
| 2 | 3234-11 | 4 | Screw-HHF |
| 3 | 353-987 | 1 | Fitting-Elbow, 90 |
| 3:1 | 237-81 | 1 | O-Ring |
| 4 | 100-4890 | 1 | Fitting-Check |
| 4:1 | 237-79 | 1 | O-Ring |
| 4:2 | 237-30 | 1 | O-Ring |
| 5 | 63-8410 | 4 | Washer |
| 6 | 104-4840 | 1 | Tank-HYD |
| 8 | 2412-34 | 2 | Clamp-Hose |
| 9 | 353-979 | 1 | Fitting-STR |
| 9:1 | 237-42 | 1 | O-Ring |
| 10 | 3234-13 | 2 | Screw-HHF |
| 11 | 340-142 | 1 | Fitting-Elbow, 90 DEG |
| 11:1 | 237-58 | 1 | O-Ring |

| Ref. | Part Number | Qty. | Description |
|---|---|---|---|
| 11:2 | 237-81 | 1 | O-Ring |
| 13 | 86-3010 | 1 | Filter-Oil |
| 14 | 57-5420 | 1 | Screw-Shoulder |
| 15 | 104-7546 | 1 | Tank Strainer ASM |
| 15:1 | 340-136 | 1 | O-Ring |
| 16 | 119-6968 | 1 | Dipstick-Oil |
| 17 | 92-5821 | 1 | Head-Filter |
| 18 | 93-7160 | 1 | Cap-Oil, HYD |
| 19 | 2412-36 | 1 | Clamp-Hose |
| 20 | 104-0486 | 1 | Hose-HYD |
| 21 | 104-4836 | 1 | Fitting-Tee |
| 21:1 | 237-58 | 2 | O-Ring |
| 21:2 | 237-81 | 1 | O-Ring |
| 22 | 104-0487 | 1 | Hose-HYD |

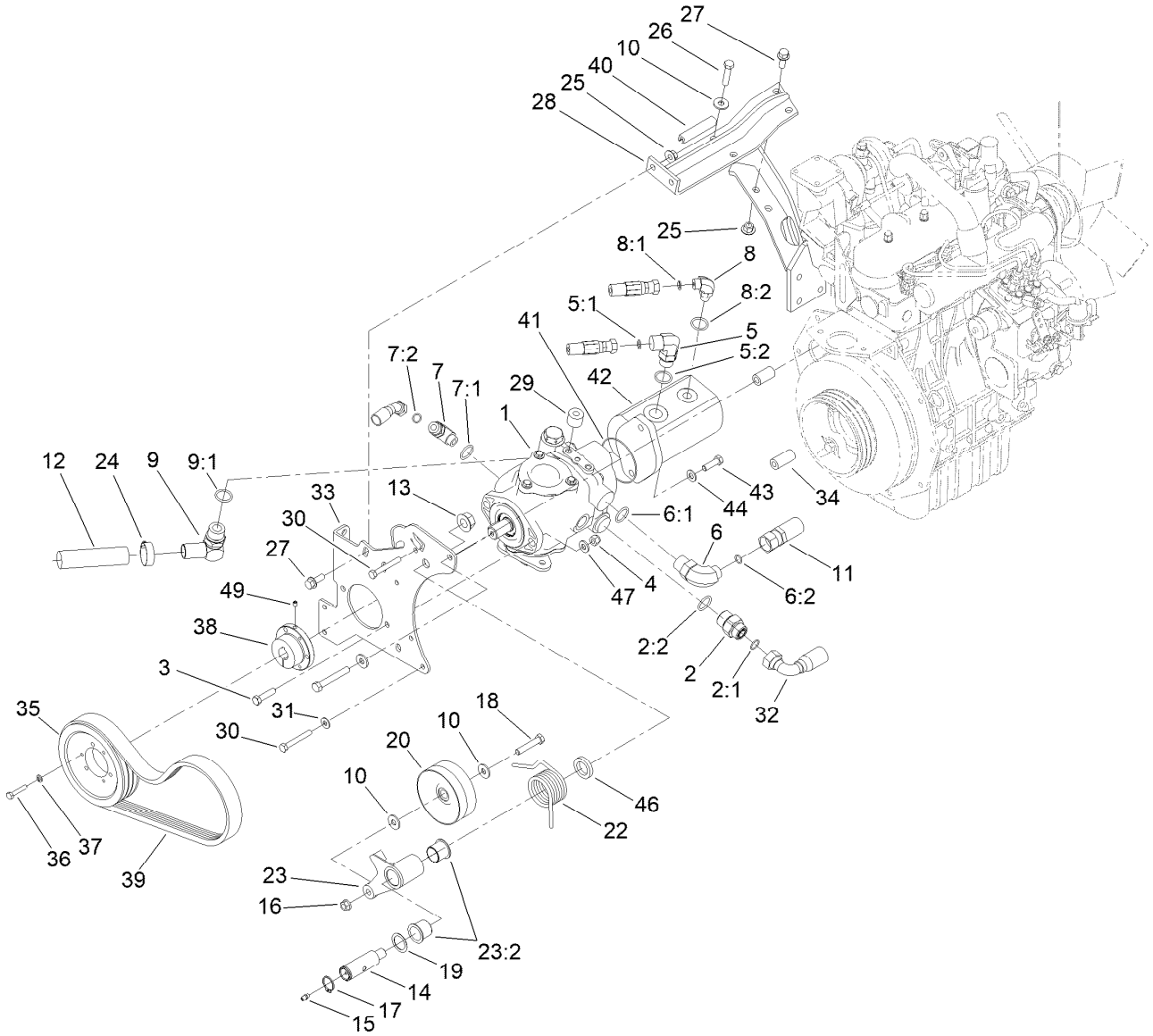


# Hydrostat Assembly

| Ref. | Part Number | Qty. | Description |
|---|---|---|---|
| 1 | 104-4890 | 1 | Piston Pump ASM |
| 2 | 340-8 | 1 | Fitting-Straight |
| 2:1 | 237-65 | 1 | O-Ring |
| 2:2 | 237-81 | 1 | O-Ring |
| 3 | 323-8 | 2 | Screw-HH |
| 4 | 3296-39 | 2 | Nut-Lock, NI |
| 5 | 340-17 | 1 | Fitting-Elbow, 90 DEG |
| 5:1 | 237-65 | 1 | O-Ring |
| 5:2 | 237-80 | 1 | O-Ring |
| 6 | 340-139 | 1 | Fitting-Elbow 90 |
| 6:1 | 237-81 | 1 | O-Ring |
| 6:2 | 237-65 | 1 | O-Ring |
| 7 | 340-18 | 1 | Fitting-HYD, 90 DEG |
| 7:1 | 237-79 | 1 | O-Ring |
| 7:2 | 237-22 | 1 | O-Ring |
| 8 | 340-77 | 1 | Fitting-Elbow, 90 DEG |
| 8:1 | 237-22 | 1 | O-Ring |
| 8:2 | 237-42 | 1 | O-Ring |
| 9 | 95-3502 | 1 | Fitting-Elbow 90 |
| 9:1 | 237-81 | 1 | O-Ring |
| 10 | 80-6990 | 4 | Washer-Hardened |

| Ref. | Part Number | Qty. | Description |
|---|---|---|---|
| 11 | 108-9008 | 1 | Hose ASM |
| 12 | 104-5486 | 1 | Hose |
| 13 | 32128-54 | 1 | Nut-HF |
| 14 | 99-3624 | 1 | Shaft-Pivot, Idler |
| 15 | 302-5 | 1 | Fitting-Grease |
| 16 | 32128-21 | 1 | Nut-HF Lock |
| 17 | 32151-36 | 1 | Ring-Retaining |
| 18 | 323-10 | 1 | Screw-HH |
| 19 | 74-1810 | 1 | Washer |
| 20 | 139-6031 | 1 | Pulley-Idler |
| 22 | 115-3488 | 1 | Spring-Torsion |
| 23 | 137-1653 | 1 | Idler Arm ASM |
| 23:2 | 126-1963 | 2 | Bushing-Pivot |
| 24 | 2412-34 | 1 | Clamp-Hose |
| 25 | 32128-43 | 4 | Nut-Flange |
| 26 | 323-19 | 2 | Screw-HH |
| 27 | 3234-11 | 4 | Screw-HHF |
| 28 | 99-3436-0P | 1 | Support-Pump |
| 29 | 99-3440 | 2 | Spacer |
| 30 | 33114-060 | 4 | Screw-HH |
| 31 | 87-8640 | 3 | Washer-Flat |

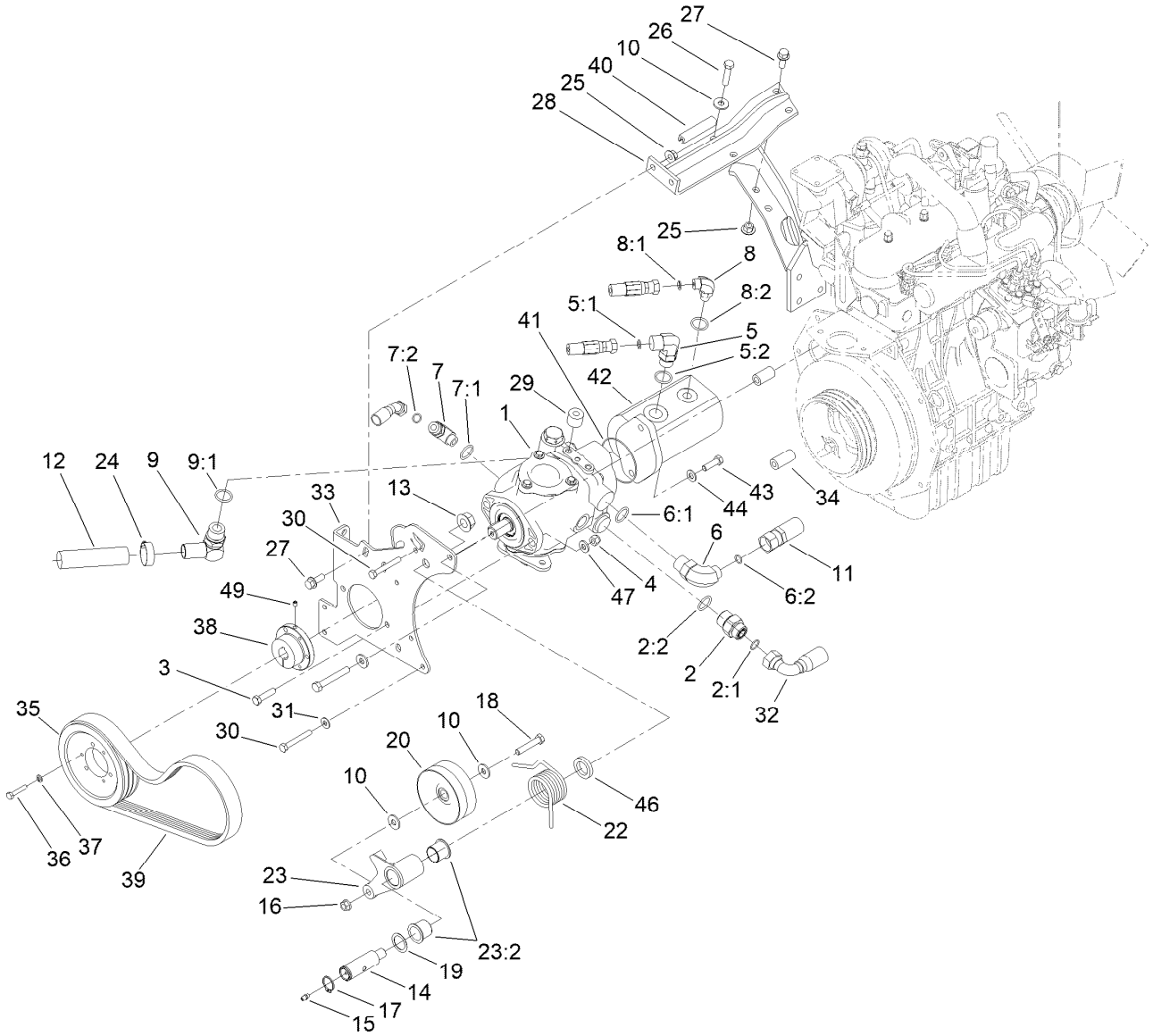


# Hydrostat Assembly (continued)

| Ref. | Part Number | Qty. | Description |
|---|---|---|---|
| 32 | 105-1214 | 1 | Hose-HYD |
| 33 | 120-3375-0P | 1 | Plate-Mount, Pump |
| 34 | 95-8941 | 4 | Spacer-Mount, Pump |
| 35 | 120-3350 | 1 | Pulley-3V |
| 36 | 321-13 | 3 | Screw-HH |
| 37 | 3253-3 | 3 | Washer-Lock |
| 38 | 100-4813 | 1 | Bushing-Lock, Taper |
| 39 | 120-3351 | 1 | Belt-3V |

| Ref. | Part Number | Qty. | Description |
|---|---|---|---|
| 40 | 70-2041 | 1 | Trim |
| 41 | 353-949 | 1 | O-Ring |
| 42 | 108-9036 | 1 | HYD Gear Pump ASM |
| 43 | 323-7 | 2 | Screw-HH |
| 44 | 3256-24 | 2 | Washer-Flat |
| 46 | 99-3625 | 1 | Spacer-Arm, Idler |
| 47 | 100-4852 | 2 | Washer-Hardened |
| 49 | 3245-7 | 1 | Screw-Set |

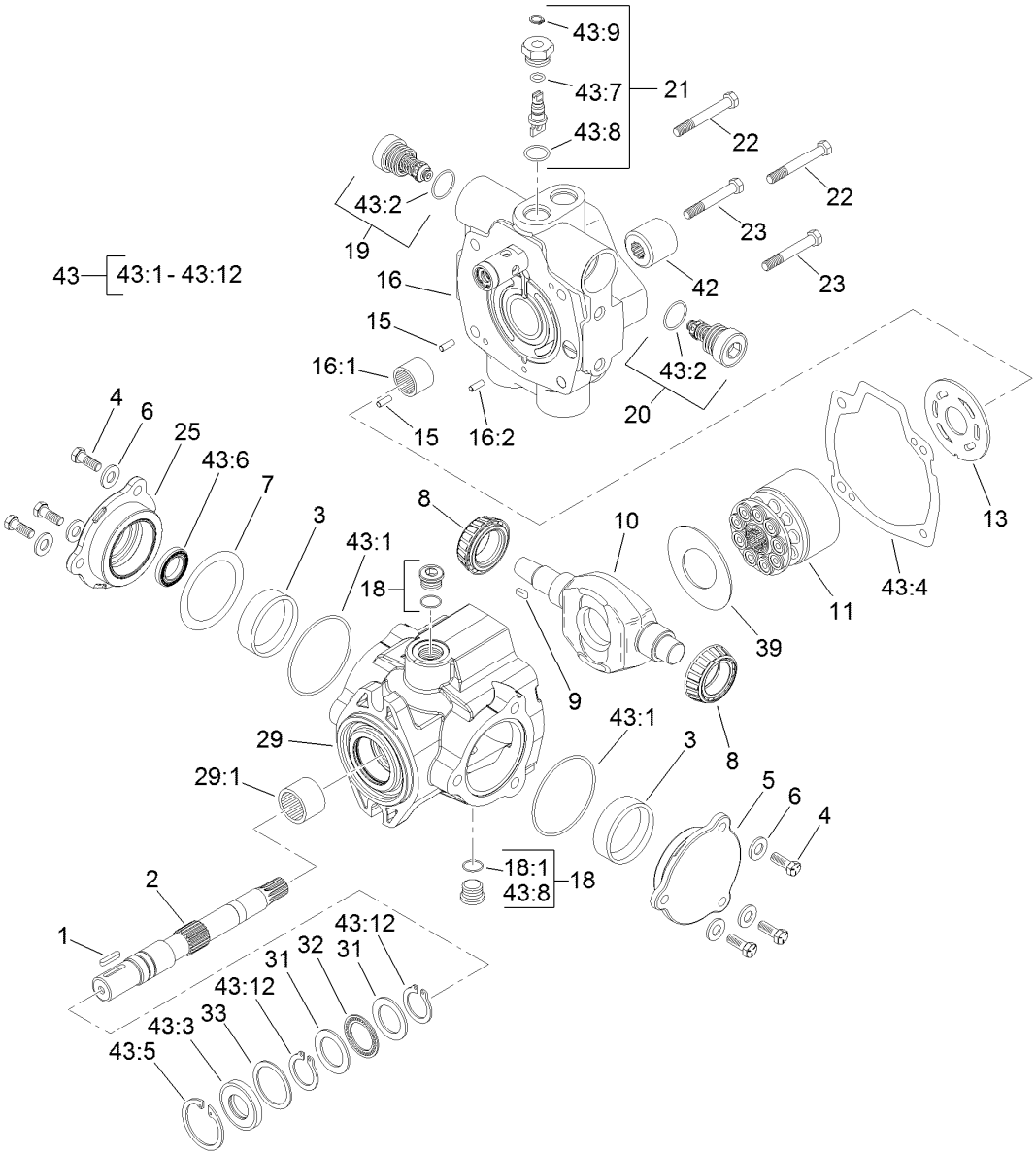


# Hydraulic Pump Assembly No. 104-4890

| Ref. | Part Number | Qty. | Description |
|---|---|---|---|
| 1 | 94-3645 | 1 | Key |
| 2 | 94-6359 | 1 | Shaft-Drive |
| 3 | 104-4046 | 2 | Bearing-Cup |
| 4 | 98-4640 | 6 | Screw-Cap |
| 5 | 98-4644 | 1 | Plate-Cover |
| 6 | 105-9762 | 6 | Washer |
| 7 | 100-3182 | 2 | Shim Kit |
| 8 | 98-4639 | 2 | Bearing-Cone |
| 9 | 94-3646 | 1 | Key |
| 10 | 104-4888 | 1 | Swashplate |
| 11 | 76-6070 | 1 | Rotating Kit |
| 13 | 104-0429 | 1 | Plate-Valve |
| 15 | 76-6150 | 2 | Pin-Dowel |
| 16 | 105-3813 | 1 | Endcover Sub ASM |
| 16:1 | 94-6368 | 1 | Bearing |
| 16:2 | | 1 | Pin-Roll ■ |
| 18 | 74-9280 | 2 | Plug ASM |
| 18:1 | | 1 | O-Ring ■ |

| Ref. | Part Number | Qty. | Description |
|---|---|---|---|
| 19 | 104-4889 | 1 | Relief Valve ASM |
| 20 | 105-3812 | 1 | Valve-Check |
| 21 | 105-3811 | 1 | Valve-Bypass |
| 22 | 76-6170 | 2 | Capscrew |
| 23 | 76-6160 | 2 | Capscrew |
| 25 | 98-4645 | 1 | Plate-Cover |
| 29 | 100-3176 | 1 | Housing ASM |
| 29:1 | 94-6363 | 1 | Bearing |
| 31 | 252-71 | 2 | Washer-Thrust |
| 32 | 252-66 | 1 | Bearing-Thrust |
| 33 | 33-3720 | 1 | Washer |
| 39 | 98-4635 | 1 | Insert-Plate, Cam |
| 42 | 74-9040 | 1 | Coupler |
| 43 | 120-5754 | 1 | Seal Kit |
| 43:1 | | 2 | O-Ring ■ |
| 43:2 | | 2 | O-Ring ■ |
| 43:3 | | 1 | Seal-Shaft ■ |
| 43:4 | | 1 | Gasket ■ |

● Not illustrated

■ Not serviced separately

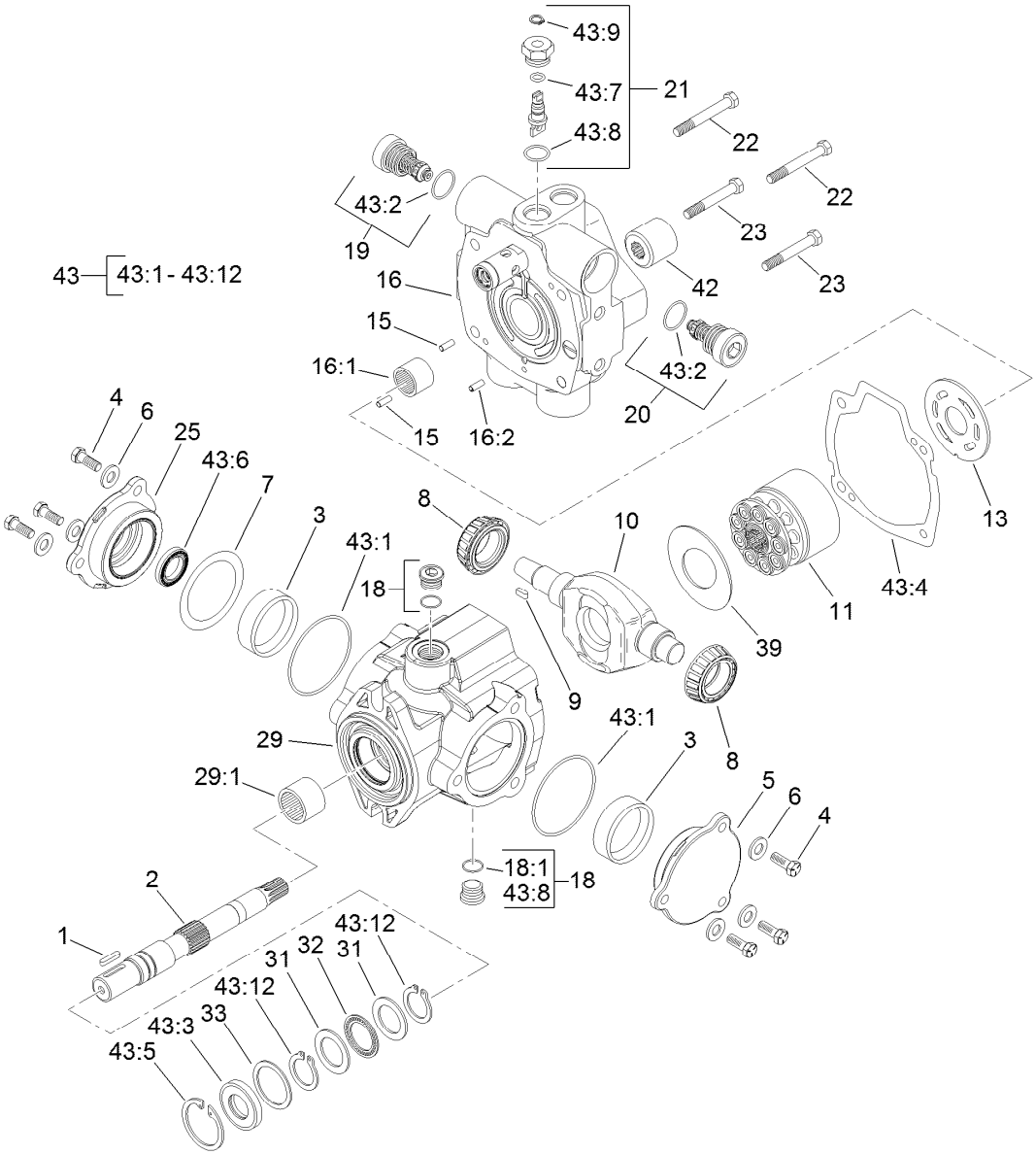


# Hydraulic Pump Assembly No. 104-4890 (continued)

| Ref. | Part Number | Qty. | Description |
|---|---|---|---|
| 43:5 | | 1 | Ring-Retaining ■ |
| 43:6 | | 1 | Seal-Shaft ■ |
| 43:7 | | 1 | O-Ring ■ |
| 43:8 | | 5 | O-Ring ■ |
| 43:9 | | 1 | Ring-Retaining ■ |

| Ref. | Part Number | Qty. | Description |
|---|---|---|---|
| 43:10 | | 1 | O-Ring ● ■ |
| 43:11 | | 1 | O Ring-Molded ● ■ |
| 43:12 | | 2 | Ring-Retaining ■ |
| 43:13 | | 1 | O-Ring ■ |

● Not illustrated

■ Not serviced separately

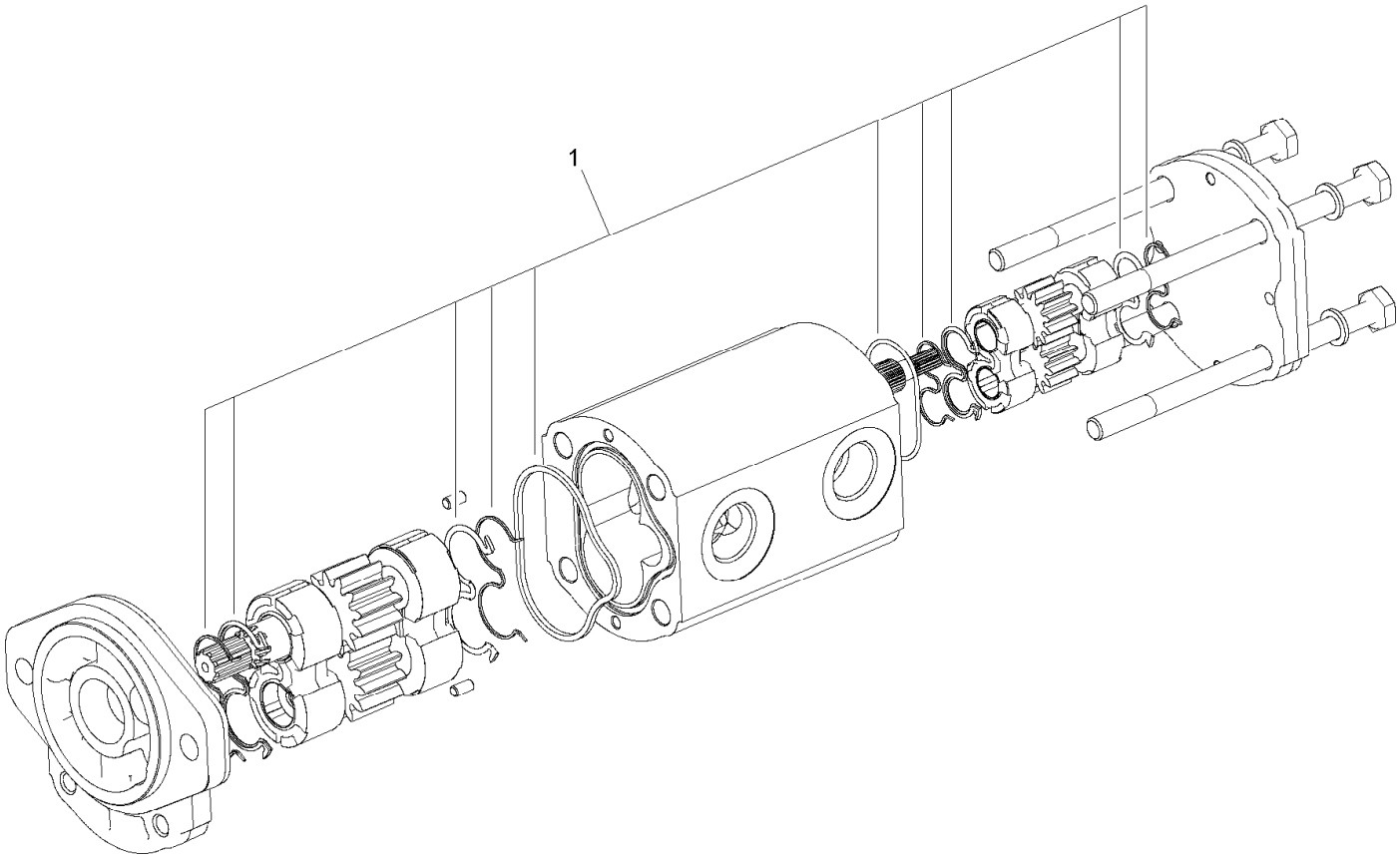


# Hydraulic Gear Pump Assembly No. 108-9036

| *Ref.* | *Part Number* | *Qty.* | *Description* |
|---|---|---|---|
| 1 | 110-8755 | 1 | Seal Kit |

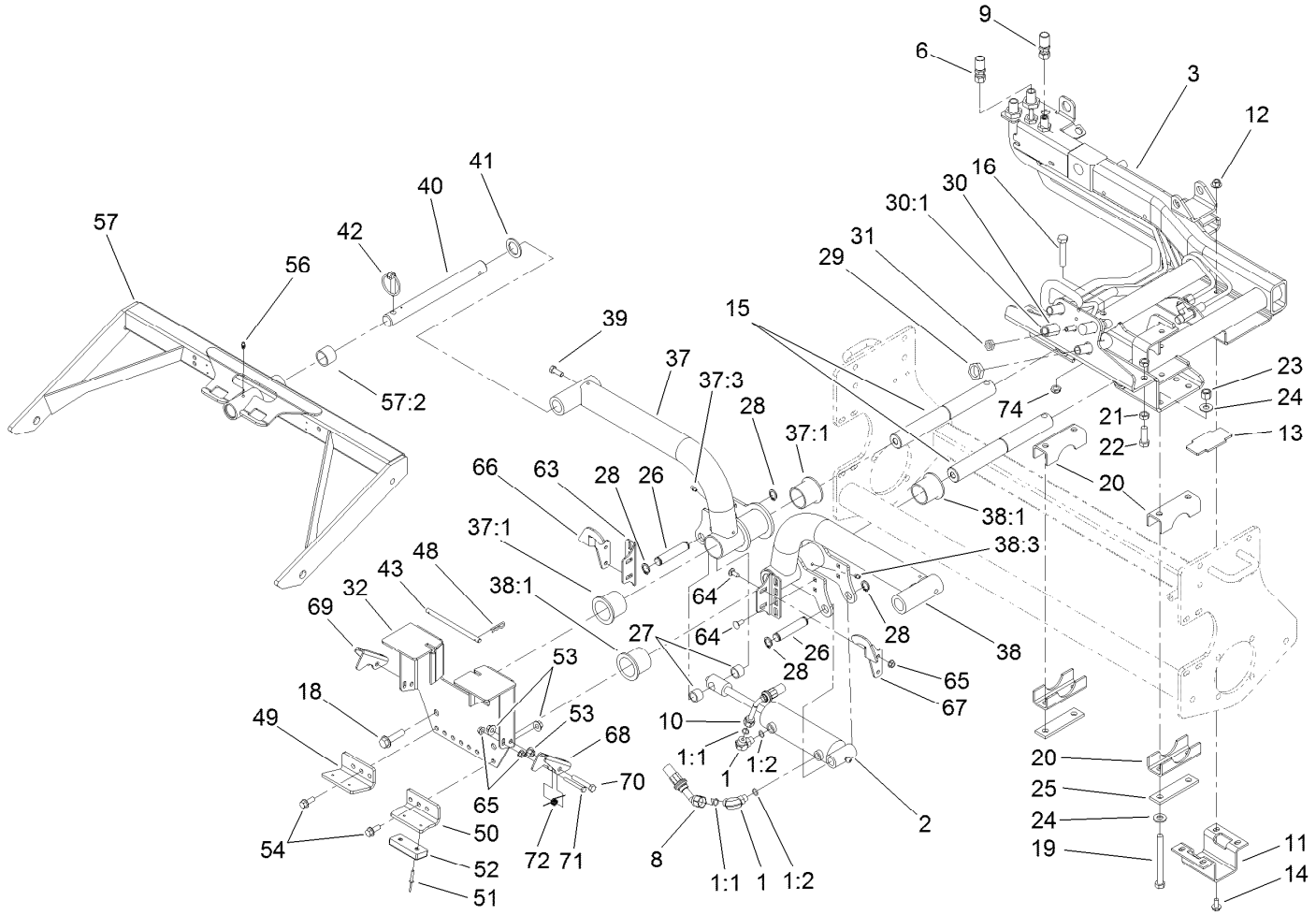


# Carrier Assembly

| Ref. | Part Number | Qty. | Description |
|---|---|---|---|
| 1 | 340-77 | 2 | Fitting-Elbow, 90 DEG |
| 1:1 | 237-22 | 1 | O-Ring |
| 1:2 | 237-42 | 1 | O-Ring |
| 2 | 112-9916 | 1 | HYD Cylinder ASM |
| 3 | 100-4939-03 | 1 | Carrier-Sidewinder |
| 6 | 99-3575 | 1 | Hose-HYD |
| 8 | 104-0405 | 1 | Hose-HYD |
| 9 | 108-9013 | 1 | Hose ASM |
| 10 | 104-0406 | 1 | Hose-HYD |
| 11 | 95-8904-03 | 1 | Bracket-Clamp |
| 12 | 32128-43 | 4 | Nut-Flange |
| 13 | 95-8538 | 1 | Slide-Plastic |
| 14 | 3234-11 | 4 | Screw-HHF |
| 15 | 95-8531 | 2 | Shaft-Pivot, Liftarm |
| 16 | 325-10 | 2 | Screw-HH |
| 18 | 3234-27 | 2 | Screw-HHF |
| 19 | 325-19 | 4 | Screw-HH |
| 20 | 95-8884 | 4 | Clamp |
| 21 | 3218-5 | 4 | Nut-Jam |
| 22 | 325-7 | 2 | Screw-HH |
| 23 | 3296-23 | 4 | Nut-Lock, NI |

| Ref. | Part Number | Qty. | Description |
|---|---|---|---|
| 24 | 87-7270 | 8 | Washer-Thrust |
| 25 | 99-3373 | 2 | Bar-Support, Slide |
| 26 | 95-8575 | 2 | Pin-Clevis |
| 27 | 75-9590 | 2 | Spacer-Cylinder |
| 28 | 32120-93 | 4 | Ring-Retaining |
| 29 | 340-74 | 4 | Nut-Lock, Bulkhead |
| 30 | 99-3640 | 1 | Tube ASM |
| 30:1 | 237-65 | 2 | O-Ring |
| 31 | 340-78 | 1 | Nut-Lock |
| 32 | 104-4820-03 | 1 | Bracket-Stop, Carrier |
| 37 | 115-3466 | 1 | RH Short Liftarm ASM |
| 37:1 | 69-6470 | 2 | Bushing-Caster |
| 37:3 | 302-5 | 1 | Fitting-Grease |
| 38 | 115-3465 | 1 | LH Short Liftarm ASM |
| 38:1 | 69-6470 | 2 | Bushing-Caster |
| 38:3 | 302-5 | 1 | Fitting-Grease |
| 39 | 323-6 | 2 | Screw-HH |
| 40 | 95-8979 | 2 | Shaft |
| 41 | 3-6781 | 2 | Washer-Thrust |
| 42 | 283-71 | 2 | Pin-Lynch |
| 43 | 104-0472 | 1 | Rod |

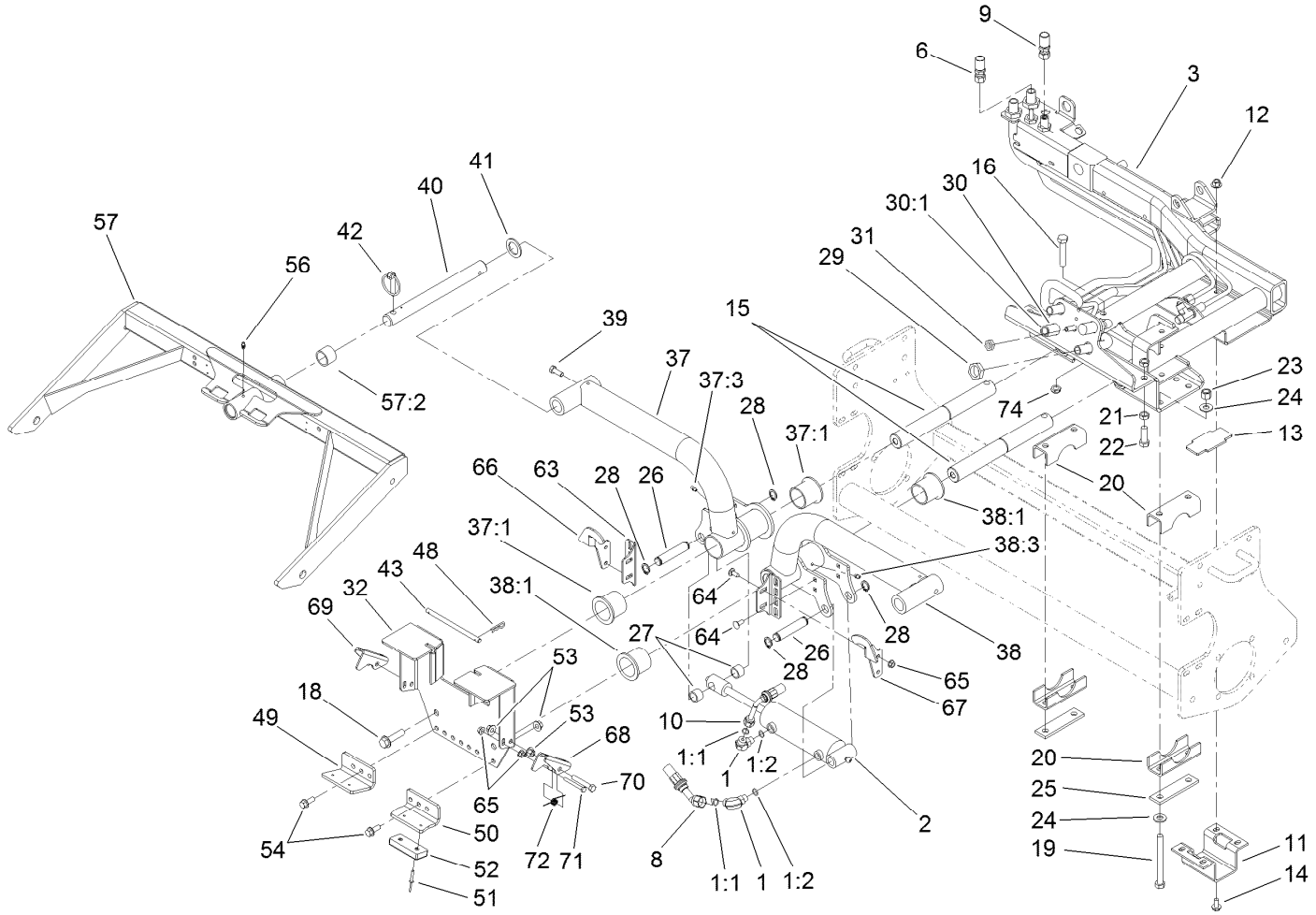


# Carrier Assembly (continued)

| Ref. | Part Number | Qty. | Description |
|---|---|---|---|
| 48 | 3290-467 | 2 | Pin-Hair |
| 49 | 110-8793-03 | 1 | Stop-Deck, RH |
| 50 | 110-8794-03 | 1 | Stop-Deck, LH |
| 51 | 3269-11 | 4 | Rivet-Pop |
| 52 | 86-5350 | 2 | Bumper-Rubber |
| 53 | 32128-43 | 4 | Nut-Flange |
| 54 | 3234-11 | 4 | Screw-HHF |
| 56 | 302-5 | 2 | Fitting-Grease |
| 57 | 110-8787 | 2 | Front Carrier Frame ASM |
| 57:2 | 108-4000 | 2 | Bushing |
| 63 | 104-4828-03 | 2 | Bracket-Actuator |

| Ref. | Part Number | Qty. | Description |
|---|---|---|---|
| 64 | 3230-23 | 8 | Bolt-CARR |
| 65 | 32128-44 | 12 | Nut |
| 66 | 104-4826-03 | 1 | Actuator-RH |
| 67 | 104-4827-03 | 1 | Actuator-LH |
| 68 | 104-4819-03 | 1 | Bracket-Pivot, LH |
| 69 | 104-4825-03 | 1 | Bracket-Pivot, RH |
| 70 | 323-11 | 2 | Screw-HH |
| 71 | 322-11 | 2 | Screw-HH |
| 72 | 104-4821 | 2 | Spring-Torsion |
| 74 | 3296-45 | 2 | Nut-Hex |

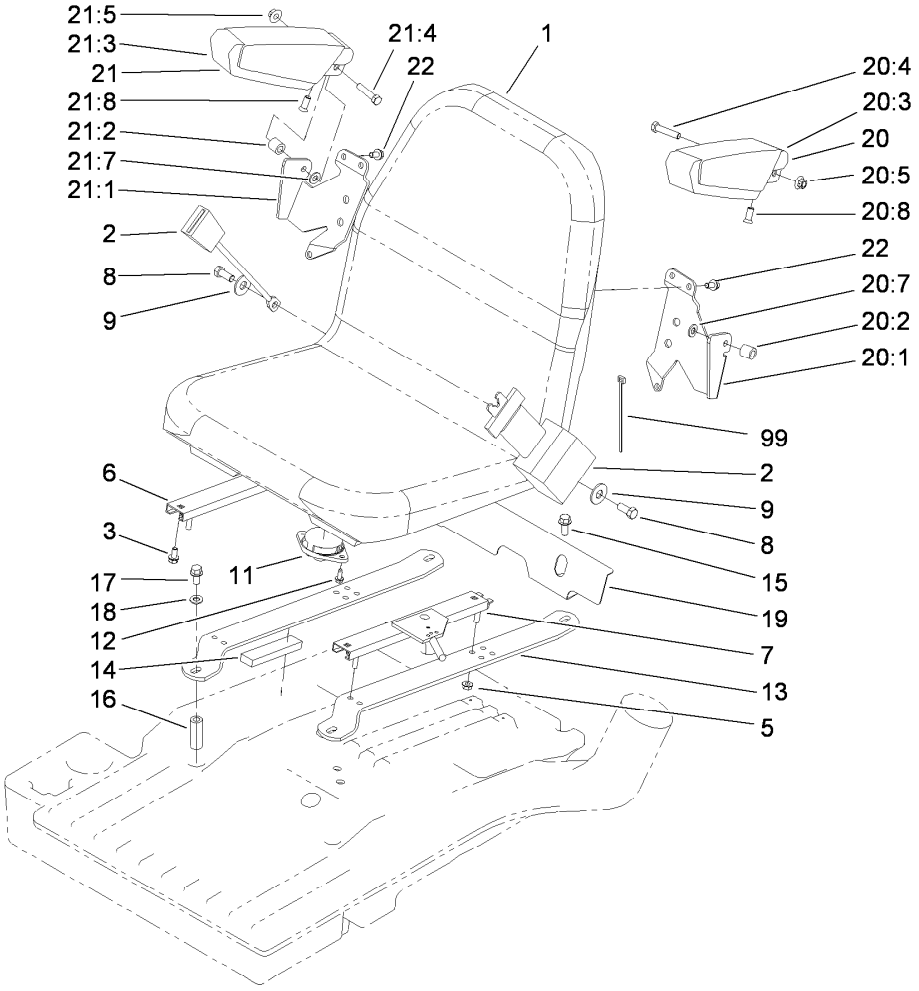


# Seat Mounting Assembly

| Ref. | Part Number | Qty. | Description |
|---|---|---|---|
| 1 | 104-4620 | 1 | Seat |
| 2 | 100-4928 | 1 | Belt-Seat |
| 3 | 3234-14 | 4 | Screw-HHF |
| 5 | 104-8300 | 4 | Nut-HF, NI |
| 6 | 92-8990 | 1 | Adjuster-Seat, Non-Locking |
| 7 | 92-8991 | 1 | Adjuster (W/Latch) |
| 8 | 3212-4 | 2 | Screw-HH |
| 9 | 3253-6 | 2 | Washer-Lock |
| 11 | 92-6282 | 1 | Switch-Seat |
| 12 | 32144-10 | 2 | Screw-HWH |
| 13 | 104-0467-03 | 2 | Strap-Support, Seat |
| 14 | 95-8896 | 2 | Foam |
| 15 | 3234-11 | 2 | Screw-HHF |
| 16 | 104-0466 | 2 | Spacer |
| 17 | 323-14 | 2 | Screw-HH |
| 18 | 3256-24 | 2 | Washer-Flat |
| 19 | 104-4833-03 | 1 | Shield-Heat |
| 20 | 92-7307 | 1 | LH Armrest ASM |

| Ref. | Part Number | Qty. | Description |
|---|---|---|---|
| 20:1 | 69-0760 | 1 | Bracket-Arm, LH |
| 20:2 | 92-7301 | 1 | Spacer |
| 20:3 | 69-1180 | 1 | Armrest |
| 20:4 | 323-9 | 1 | Screw-HH |
| 20:5 | 32128-19 | 1 | Nut-HF Lock,Large Flg |
| 20:7 | 3256-24 | 1 | Washer-Flat |
| 20:8 | 92-7318 | 1 | Screw |
| 21 | 92-7306 | 1 | RH Armrest ASM |
| 21:1 | 69-0770 | 1 | Bracket-Arm, RH |
| 21:2 | 92-7301 | 1 | Spacer |
| 21:3 | 69-1180 | 1 | Armrest |
| 21:4 | 323-9 | 1 | Screw-HH |
| 21:5 | 32128-19 | 1 | Nut-HF Lock,Large Flg |
| 21:7 | 3256-24 | 1 | Washer-Flat |
| 21:8 | 92-7318 | 1 | Screw |
| 22 | 3234-14 | 6 | Screw-HHF |
| 99 | 3290-378 | 1 | Tie-Cable |

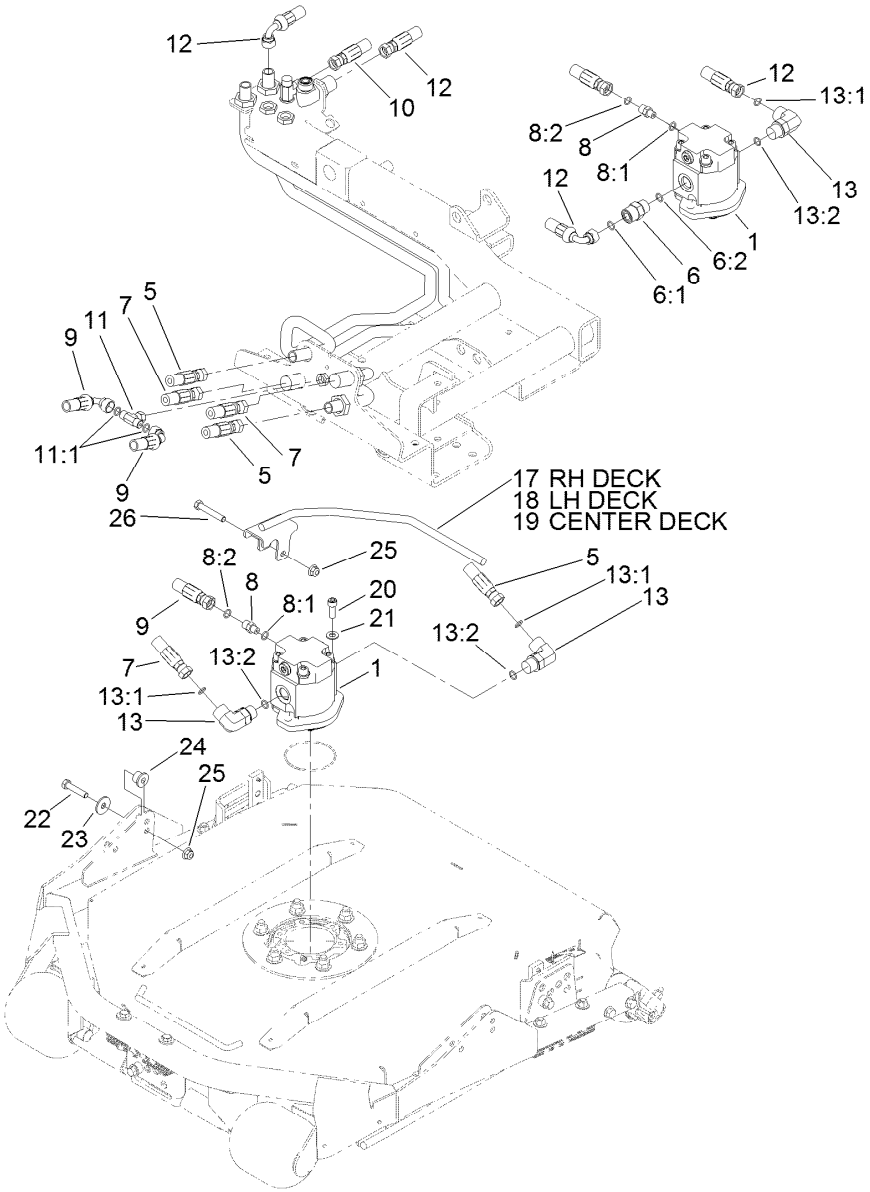


# Rotary Motor and Cutting Unit Assembly

| Ref. | Part Number | Qty. | Description |
|---|---|---|---|
| 1 | 117-5141 | 3 | HYD Motor ASM |
| 5 | 105-1216 | 2 | Hose-HYD |
| 6 | 340-7 | 1 | Fitting-Straight |
| 6:1 | 237-65 | 1 | O-Ring |
| 6:2 | 237-80 | 1 | O-Ring |
| 7 | 105-1215 | 2 | Hose-HYD |
| 8 | 340-92 | 3 | Fitting-Straight |
| 8:1 | 237-78 | 1 | O-Ring |
| 8:2 | 237-21 | 1 | O-Ring |
| 9 | 104-1080 | 2 | Hose-HYD |
| 10 | 100-4876 | 1 | Hose-HYD |
| 11 | 99-3477 | 1 | Fitting-Tee |
| 11:1 | 237-42 | 2 | O-Ring |
| 12 | 100-4880 | 2 | Hose-HYD |

| Ref. | Part Number | Qty. | Description |
|---|---|---|---|
| 13 | 340-17 | 5 | Fitting-Elbow, 90 DEG |
| 13:1 | 237-65 | 1 | O-Ring |
| 13:2 | 237-80 | 1 | O-Ring |
| 17 | 112-9901-03 | 1 | Guard-Foot, RH |
| 18 | 112-9902-03 | 1 | Guard-Foot, LH |
| 19 | 112-9900-03 | 1 | Guard-Foot |
| 20 | 3274-7 | 6 | Screw-HSH |
| 21 | 3256-24 | 6 | Washer-Flat |
| 22 | 323-52 | 6 | Screw-HH |
| 23 | 93-8806 | 6 | Washer-Hardened |
| 24 | 95-8803 | 6 | Bushing-Flange |
| 25 | 104-8301 | 10 | Nut-HF, NI |
| 26 | 323-11 | 4 | Screw-HH |

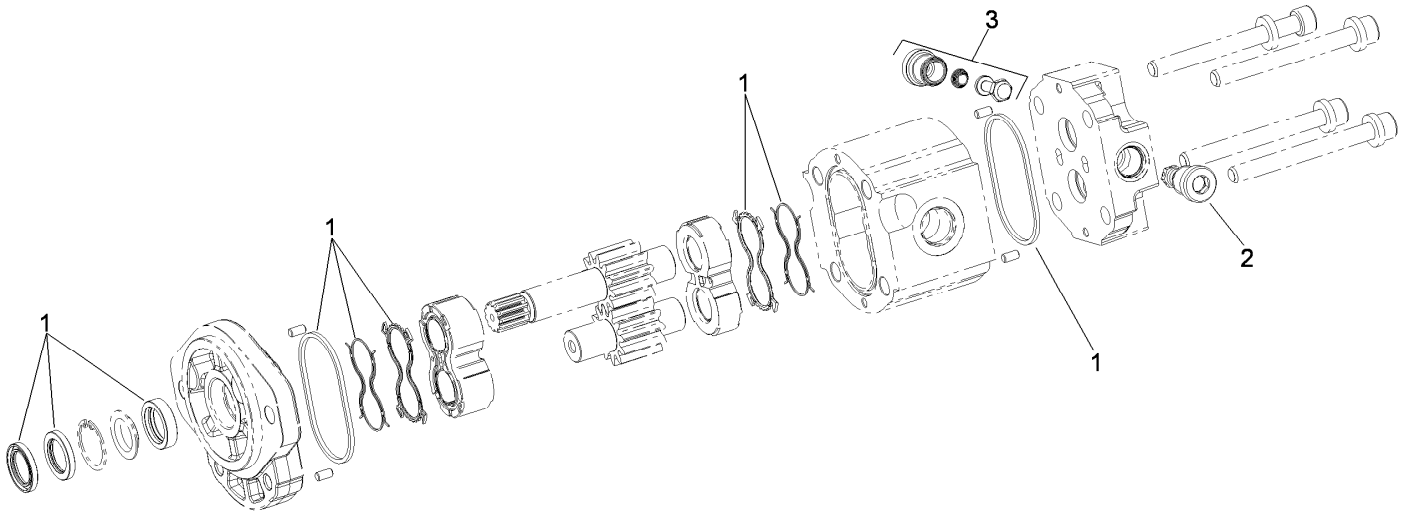


# Gear Motor Assembly No. 117-5141

| *Ref.* | *Part Number* | *Qty.* | *Description* |
|---|---|---|---|
| 1 | 117-0235 | 1 | Seal Kit |
| 2 | 107-7820 | 1 | Valve-Relief |
| 3 | 107-7821 | 1 | Valve-Anticavitation |

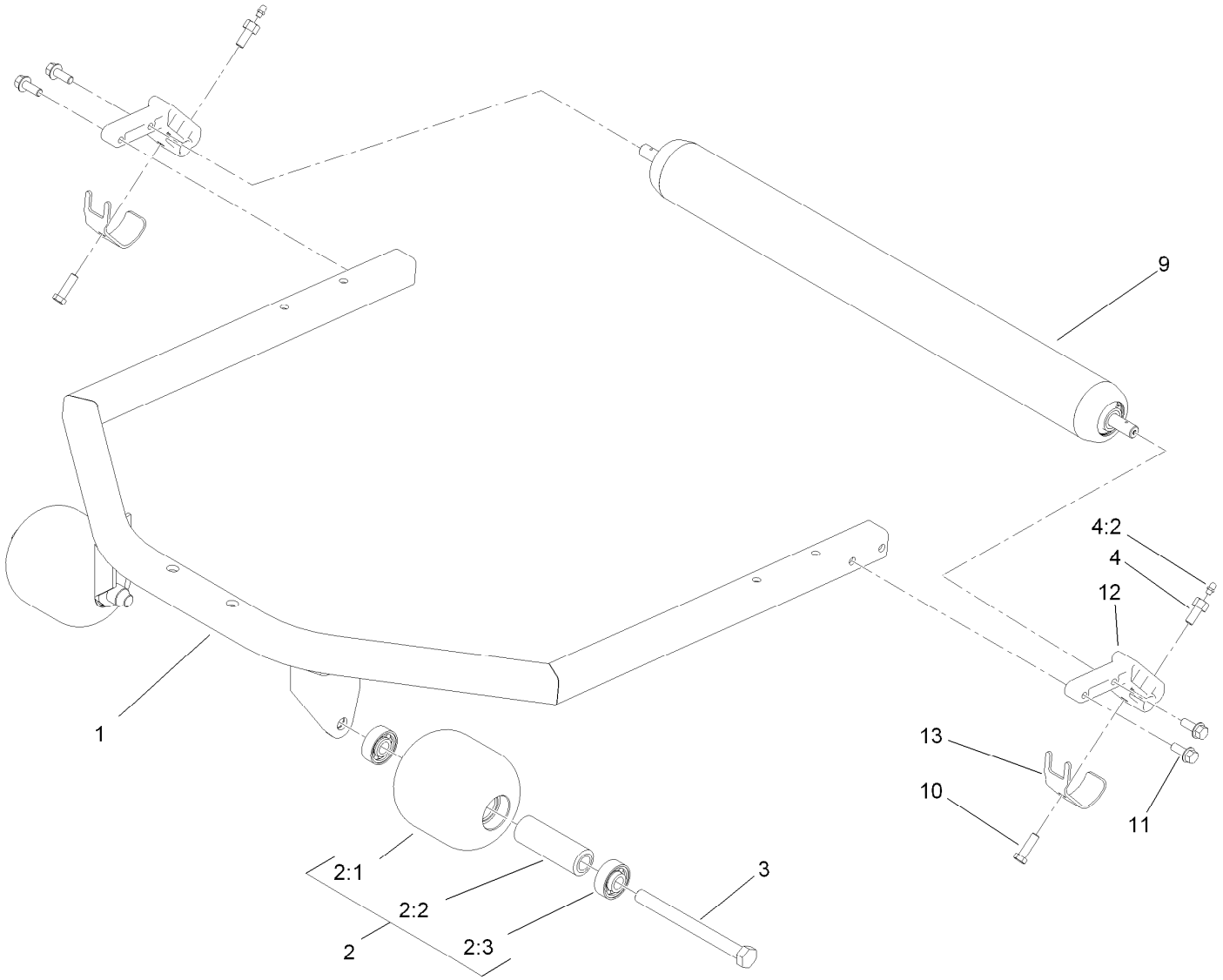


# Roller and Carrier Frame Assembly

| *Ref.* | *Part Number* | *Qty.* | *Description* |
|---|---|---|---|
| 1 | 100-5780-03 | 1 | Frame-Deck |
| 2 | 115-3418 | 2 | Roller ASM |
| 2:1 | 104-1093 | 1 | Roller |
| 2:2 | 100-5762 | 1 | Spacer-Bearing |
| 2:3 | 120-3366 | 2 | Bearing |
| 3 | 327-15 | 2 | Screw-HH |
| 4 | 112-5270 | 2 | Roller Shaft Screw ASM |
| 4:2 | 302-5 | 1 | Fitting-Grease |
| 9 | 112-5265 | 1 | Roller ASM |
| 10 | 323-7 | 2 | Screw-HH |
| 11 | 3234-11 | 4 | Screw-HHF |
| 12 | 112-5268 | 2 | Mount-Roller |
| 13 | 107-7816 | 2 | Bracket-Skid |

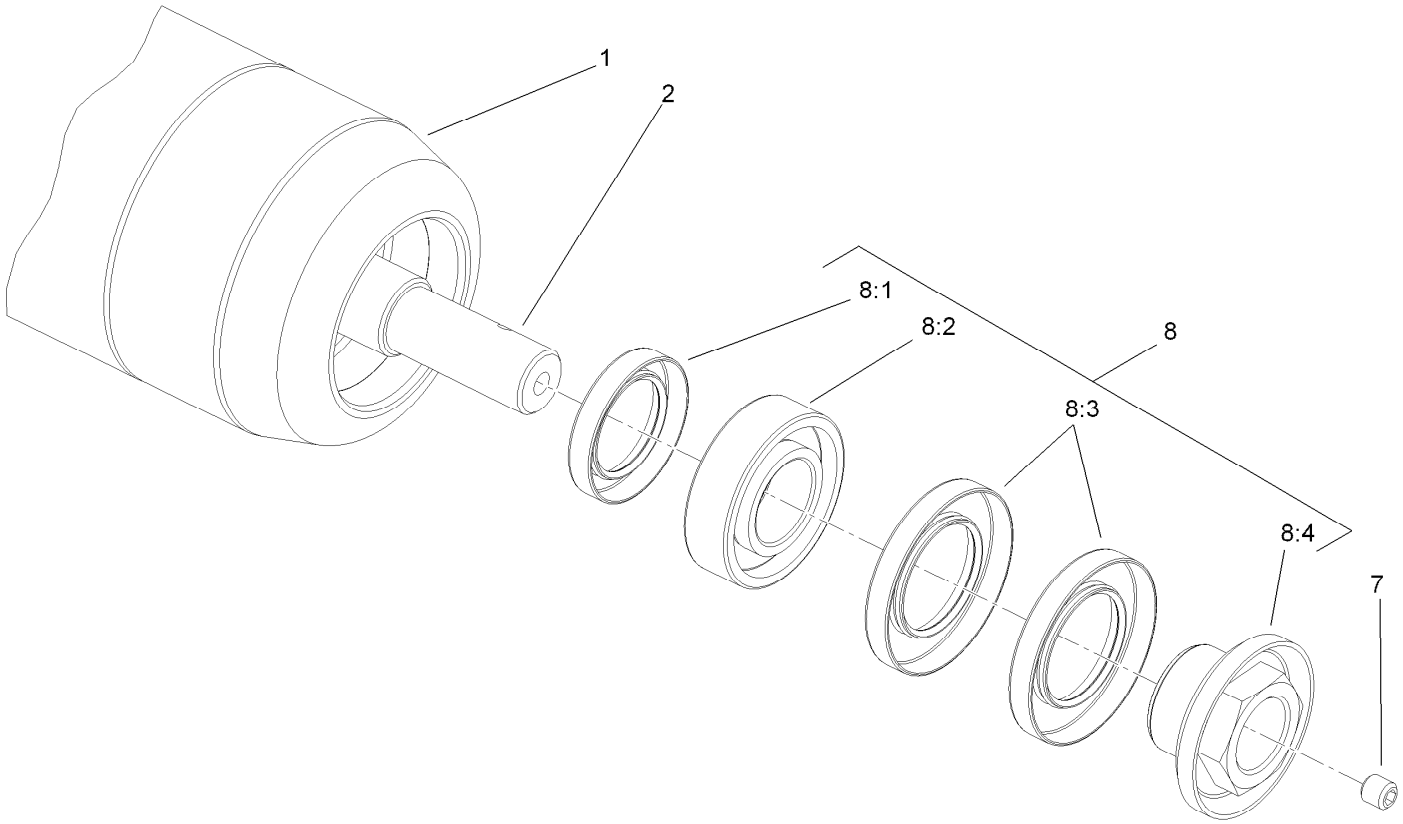


# Roller Assembly No. 112-5265

| *Ref.* | *Part Number* | *Qty.* | *Description* |
|---|---|---|---|
| 1 | 112-5274-03 | 1 | Tube ASM |
| 2 | 117-5100 | 1 | Shaft-Roller, Rear |
| 7 | 108-0989 | 2 | Screw-Set |
| 8 | 114-5430 | 1 | Roller Rebuild Kit |
| 8:1 | 114-3717 | 2 | Seal-Oil |
| 8:2 | 112-5290 | 2 | Bearing-Steel, Stainless |
| 8:3 | 112-7494 | 4 | Seal |
| 8:4 | 114-5411 | 2 | Nut-Lock, Bearing |

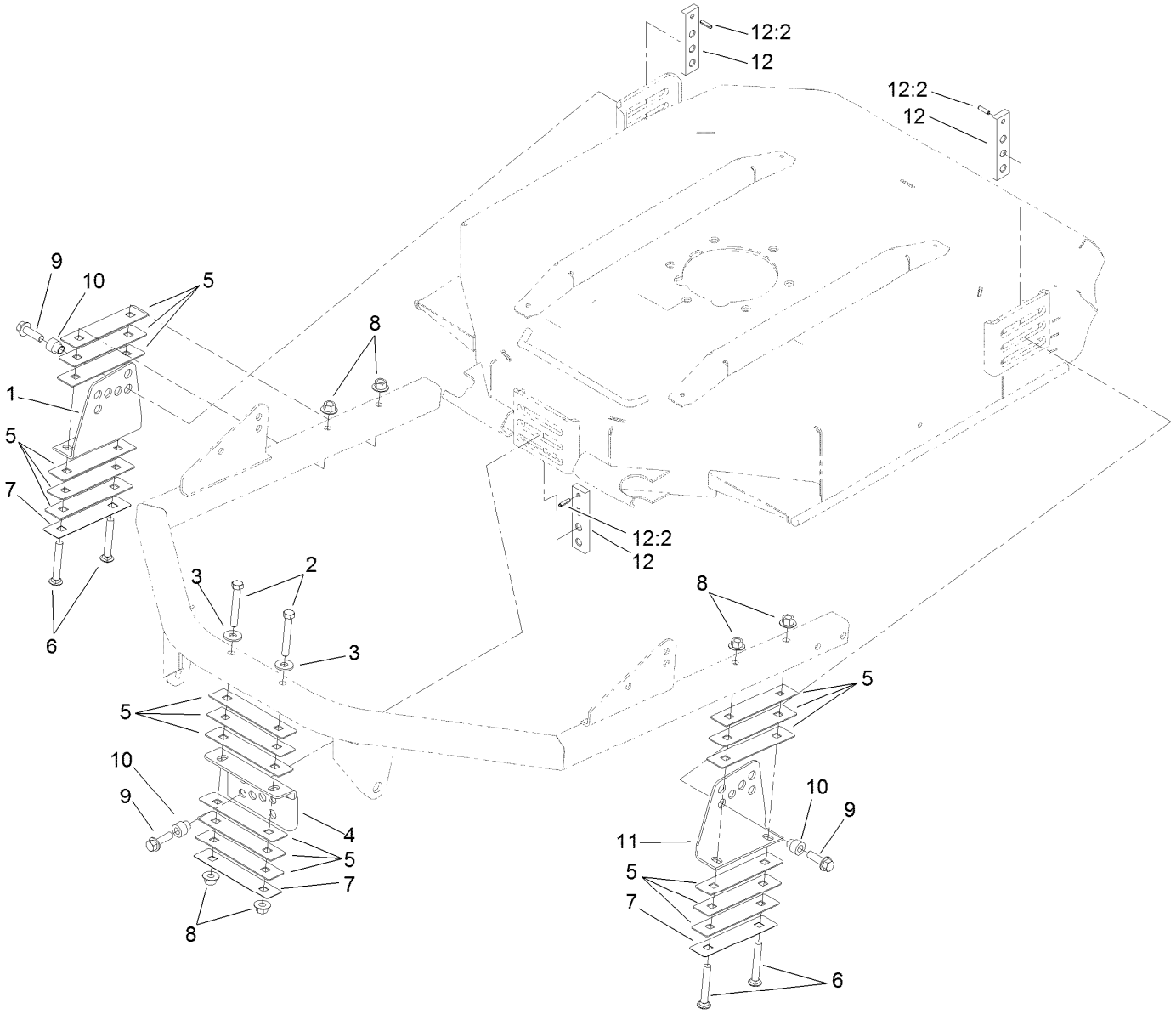


# Height-of-Cut Bracket Assembly

| Ref. | Part Number | Qty. | Description |
|---|---|---|---|
| 1 | 100-5797-03 | 1 | Bracket-HOC, RH |
| 2 | 323-12 | 2 | Screw-HH |
| 3 | 80-6990 | 2 | Washer-Hardened |
| 4 | 104-1052-03 | 1 | Bracket-HOC, Front |
| 5 | 100-5799 | 18 | Shim-HOC, .060 Inch |
| 6 | 3231-9 | 4 | Screw-CARR |
| 7 | 104-4641 | 3 | Shim-HOC, .030 Inch |
| 8 | 32128-43 | 6 | Nut-Flange |
| 9 | 3234-24 | 3 | Screw-HHF |
| 10 | 121-3575 | 3 | Spacer-HOC |
| 11 | 104-4624-03 | 1 | Bracket-HOC, LH |
| 12 | 105-9225 | 3 | HOC Plate ASM |
| 12:2 | 32121-3 | 1 | Pin-Spring |

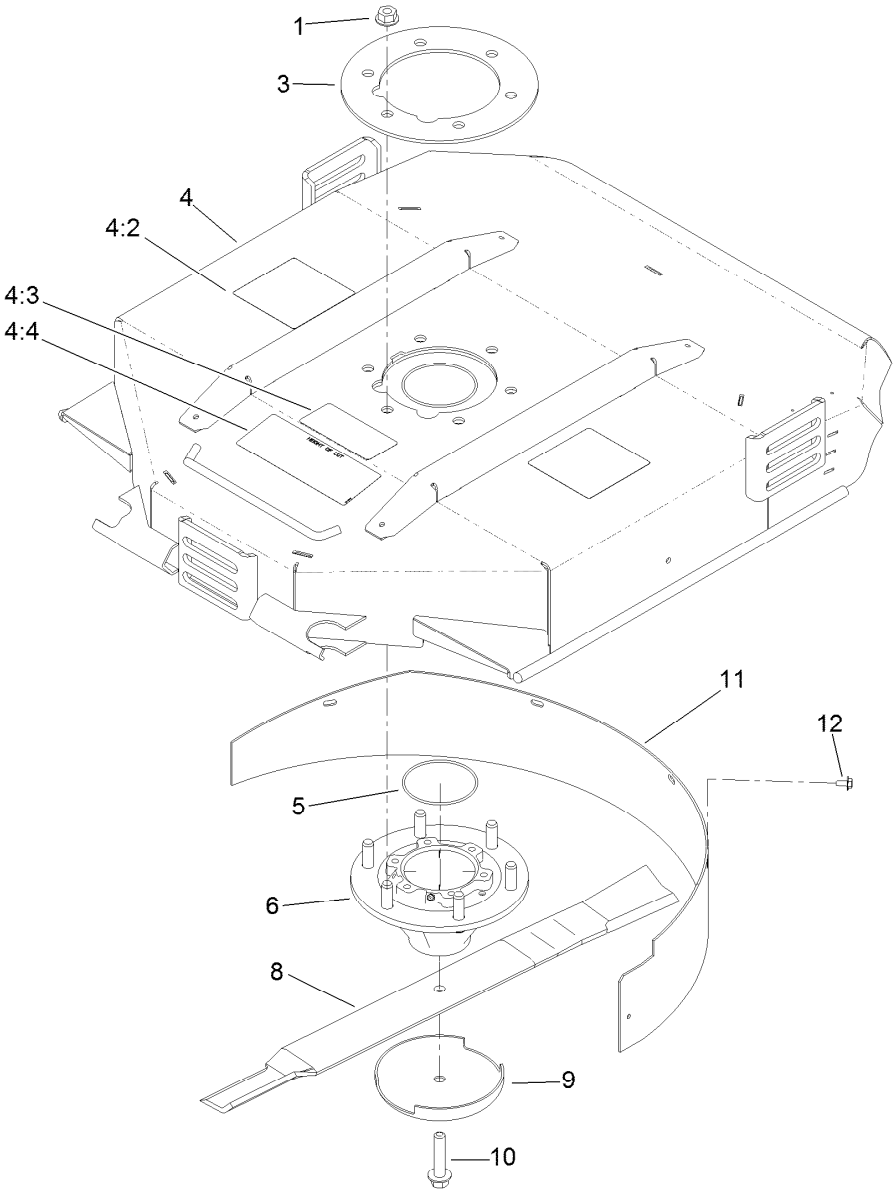


# Chamber, Blade and Spindle Assembly

| *Ref.* | *Part Number* | *Qty.* | *Description* |
|---|---|---|---|
| 1 | 32128-39 | 6 | Nut-HHF |
| 3 | 104-1051-03 | 1 | Plate-Spindle |
| 4 | 115-3479 | 1 | Chamber ASM |
| 4:2 | 117-4764 | 2 | Decal-Danger |
| 4:3 | 93-7818 | 1 | Decal-Torque, Blade Bolt |
| 4:4 | 104-1086 | 1 | Decal-HOC |
| 5 | 237-161 | 1 | O-Ring |
| 6 | 115-3435 | 1 | Spindle ASM |
| 8 | 107-0235-03 | 1 | Blade-Atomic |
| 8 | 108-9026-03 | 1 | Blade-Combo |
| 9 | 72-9361 | 1 | Cup-Scalp, Anti |
| 10 | 92-5816 | 1 | Bolt-Blade |
| 11 | 108-9025-01 | 1 | Baffle-Mulching |
| 12 | 46-8560 | 5 | Screw-HHFTF |

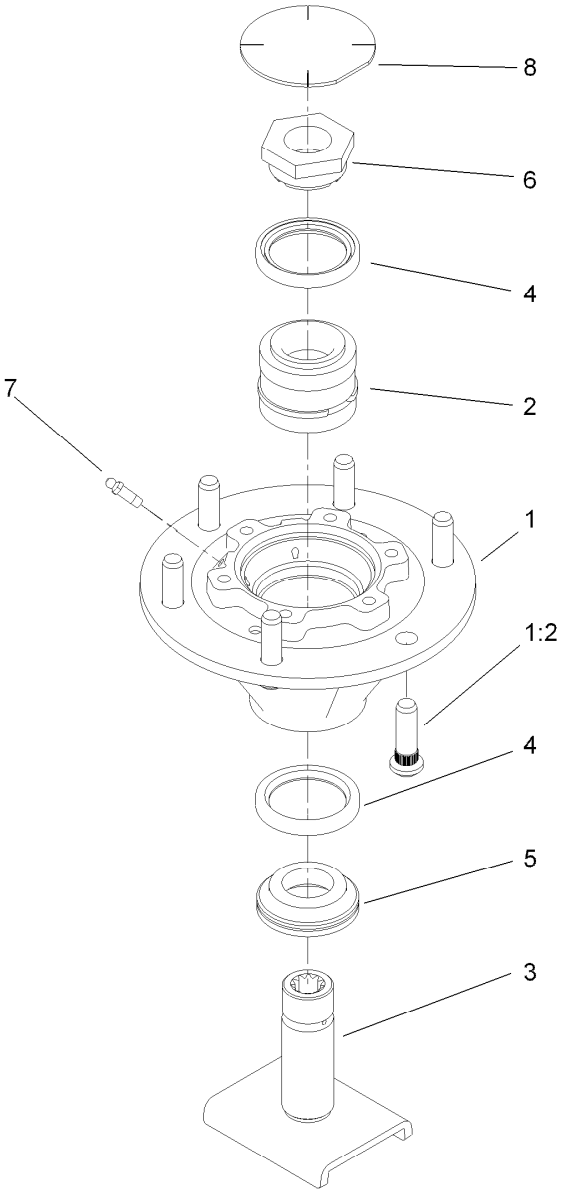


# Spindle Assembly No. 115-3435

| Ref. | Part Number | Qty. | Description |
|---|---|---|---|
| 1 | 115-3434 | 1 | Spindle |
| 1:2 | 10-6830 | 6 | Stud-Type, Drive |
| 2 | 100-5703 | 1 | Spacer And Bearing ASM |
| 3 | 100-5705 | 1 | Spindle Shaft ASM |
| 4 | 253-154 | 2 | Seal-Oil |
| 5 | 69-6950 | 1 | Spacer-Shaft, Spindle |
| 6 | 100-5709 | 1 | Nut-Spindle, Spcl |
| 7 | 302-62 | 2 | Fitting-Grease |
| 8 | 94-2703 | 1 | Plug |

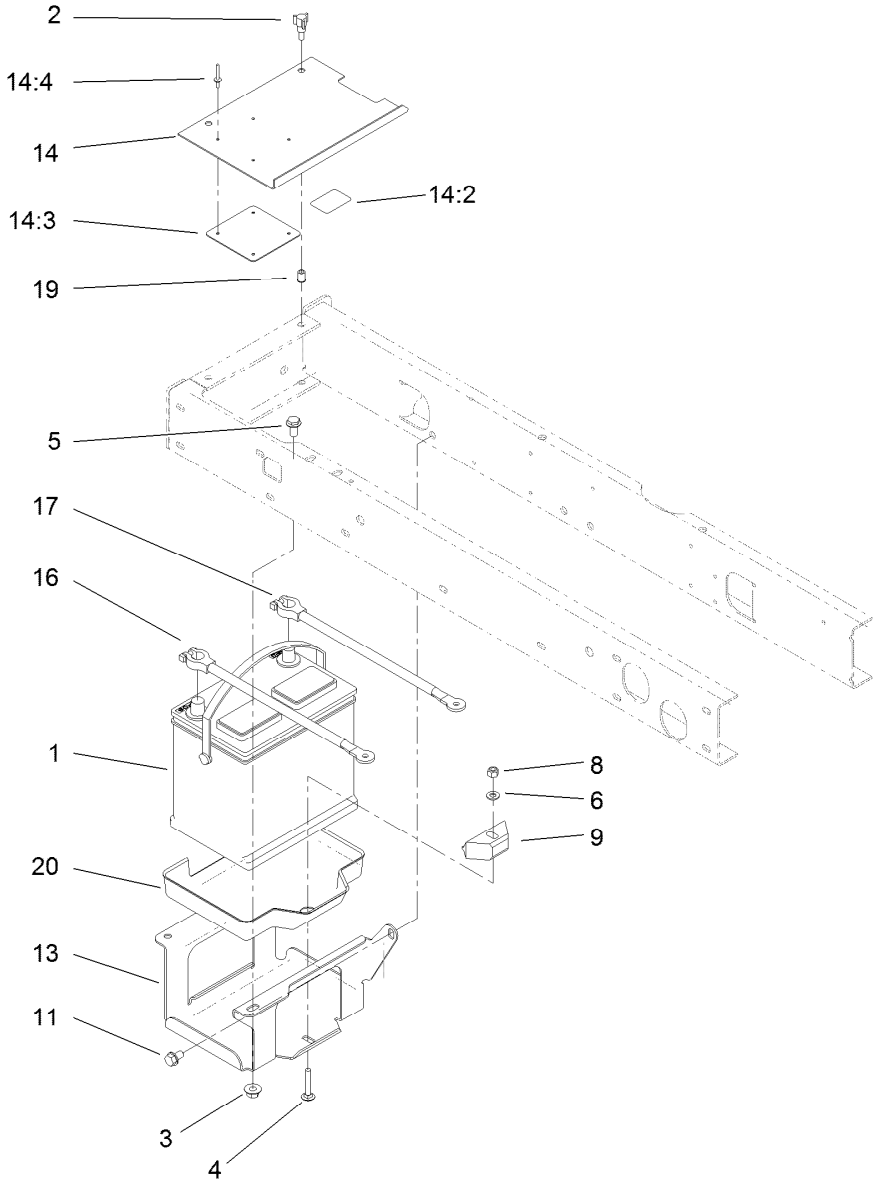


# Battery Assembly

| Ref. | Part Number | Qty. | Description |
|---|---|---|---|
| 1 | 104-9979 | 1 | Battery |
| 2 | 233-70 | 2 | Knob-Star, Three |
| 3 | 32128-43 | 3 | Nut-Flange |
| 4 | 3230-6 | 1 | Bolt-CARR |
| 5 | 3234-1 | 3 | Screw-HHF |
| 6 | 3256-23 | 1 | Washer-Plain |
| 8 | 3296-29 | 1 | Nut-Lock, NI |
| 9 | 66-2490 | 1 | Retainer-Battery |
| 11 | 32144-15 | 1 | Screw-HHFTF |

| Ref. | Part Number | Qty. | Description |
|---|---|---|---|
| 13 | 95-8796-03 | 1 | Support-Battery |
| 14 | 99-3602 | 1 | Battery Cover ASM |
| 14:2 | 93-7276 | 1 | Decal-Danger |
| 14:3 | 87-7620 | 1 | Shield-Terminal, Battery |
| 14:4 | 3269-27 | 4 | Rivet-Snap |
| 16 | 95-8853 | 1 | Cable-Battery, Positive |
| 17 | 95-8854 | 1 | Cable-Battery, Negative |
| 19 | 32148-6 | 2 | Nut-Clinch |
| 20 | 99-3513 | 1 | Tray-Battery |

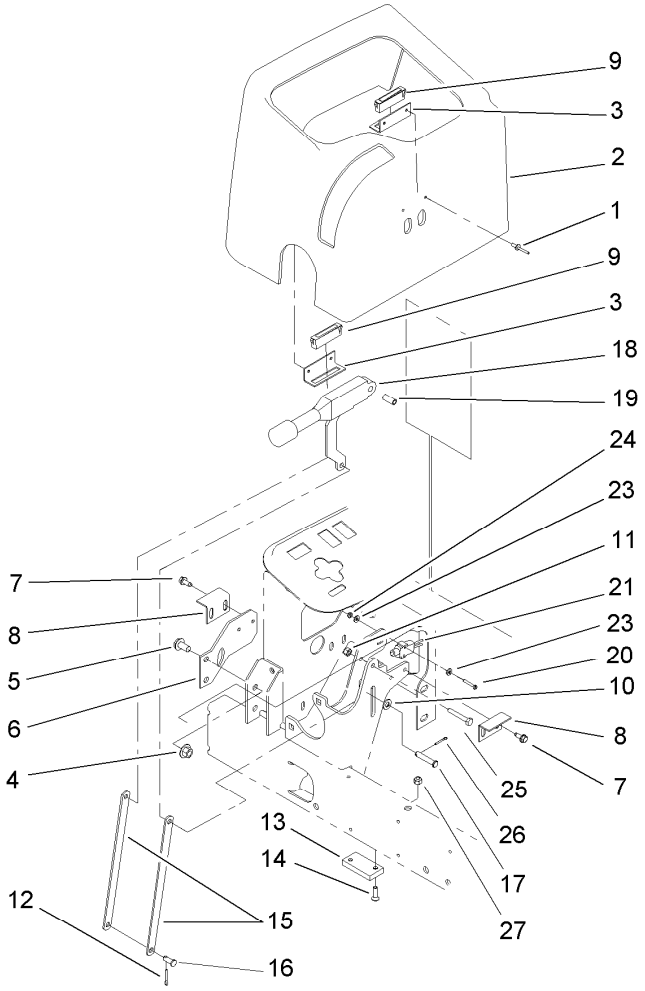


# Parking Brake Assembly

| Ref. | Part Number | Qty. | Description |
|---|---|---|---|
| 1 | 3269-5 | 4 | Rivet-Pop |
| 2 | 95-8707 | 1 | Cover-Dash |
| 3 | 95-8763 | 2 | Bracket-Hold Down, Cover |
| 4 | 32128-43 | 2 | Nut-Flange |
| 5 | 3234-1 | 2 | Screw-HHF |
| 6 | 95-8764-03 | 1 | Support-Magnet |
| 7 | 32144-10 | 4 | Screw-HWH |
| 8 | 95-8765 | 2 | Bracket-Strike, Magnet |
| 9 | 58-4250 | 2 | Catch-Magnetic |
| 10 | 3256-23 | 3 | Washer-Plain |
| 11 | 3296-42 | 1 | Nut-Lock, NI |
| 12 | 3272-10 | 1 | Pin-Cotter |
| 13 | 95-8684 | 1 | Pad-Bumper |

| Ref. | Part Number | Qty. | Description |
|---|---|---|---|
| 14 | 3289-4 | 2 | Screw-FH |
| 15 | 104-4628-03 | 2 | Link-Brake, Parking |
| 16 | 283-62 | 1 | Pin-Clevis |
| 17 | 94-3829 | 1 | Pin-Clevis |
| 18 | 104-4817 | 1 | Lever-Brake |
| 19 | 87-4710 | 1 | Spacer-Brake, Parking |
| 20 | 32105-9 | 2 | Screw |
| 21 | 95-8900 | 1 | Switch |
| 23 | 3256-21 | 4 | Washer-Flat |
| 24 | 3296-9 | 2 | Nut-Hex |
| 25 | 321-10 | 1 | Screw-HH |
| 26 | 3272-6 | 1 | Pin-Cotter |
| 27 | 32128-32 | 2 | Nut-HHF |

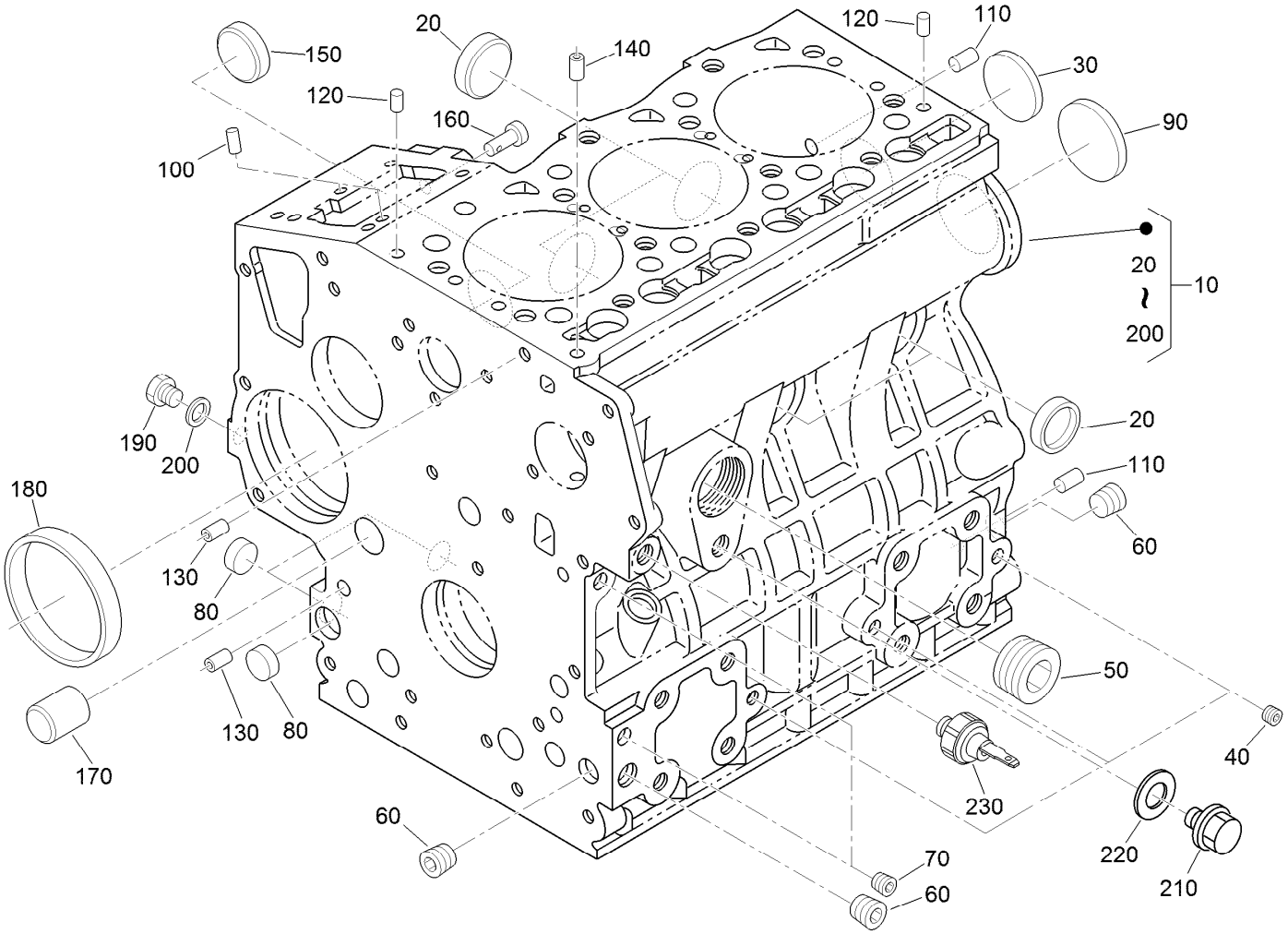


# Crankcase Assembly

| Ref. | Part Number | Qty. | Description |
|---|---|---|---|
| 10 | 115-3443 | 1 | Crankcase ASM |
| 20 | 98-9398 | 4 | Cap-Sealing |
| 30 | 98-7539 | 1 | Cap-Sealing |
| 40 | 98-9687 | 3 | Plug |
| 50 | 105-3779 | 1 | Plug |
| 60 | 98-9597 | 3 | Plug |
| 70 | 98-7487 | 2 | Plug |
| 80 | 98-9379 | 3 | Plug-Expansion |
| 90 | 98-9668 | 1 | Plug-Expansion |
| 100 | 98-9375 | 2 | Pin-Straight |
| 110 | 98-9377 | 2 | Pin-Straight |
| 120 | 98-9376 | 2 | Pin-Straight |

| Ref. | Part Number | Qty. | Description |
|---|---|---|---|
| 130 | 98-9387 | 2 | Pin-Pipe |
| 140 | 98-9539 | 1 | Pin-Pipe |
| 150 | 98-9599 | 1 | Plug |
| 160 | 98-9630 | 1 | Pin-Spring, Start |
| 170 | 98-9675 | 1 | Plug |
| 180 | 98-9656 | 1 | Bushing-Governor, Gear |
| 190 | 120-2559 | 1 | Plug |
| 200 | 98-7428 | 1 | Gasket |
| 210 | 99-3447 | 1 | Plug |
| 220 | 106-7056 | 1 | Gasket |
| 230 | 98-9416 | 1 | Switch-Oil |

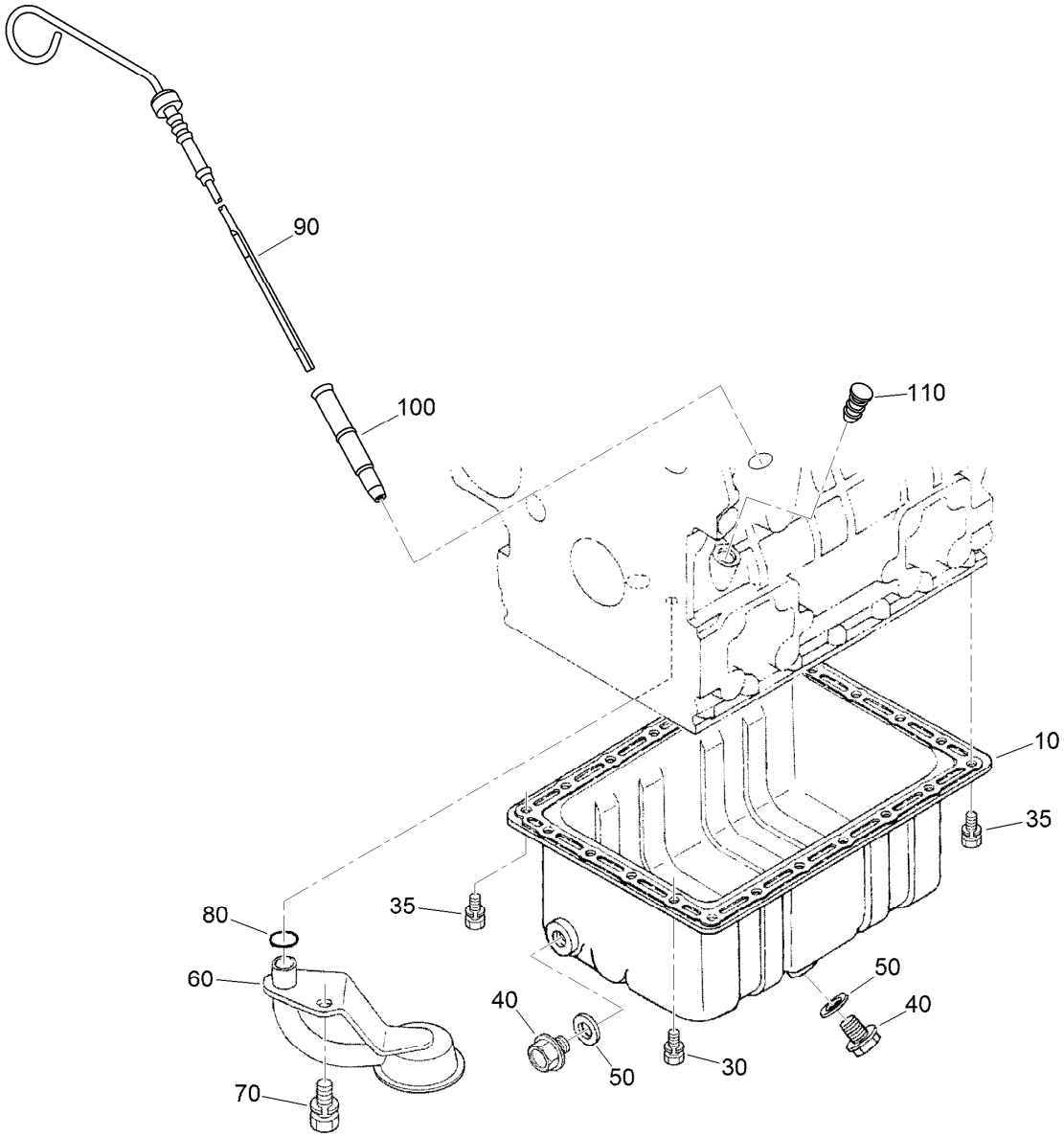


# Oil Pan and Dipstick Assembly

| *Ref.* | *Part Number* | *Qty.* | *Description* |
|---|---|---|---|
| 10 | 98-9685 | 1 | Pan-Oil |
| 30 | 98-9351 | 20 | Bolt |
| 35 | 98-9351 | 2 | Bolt |
| 40 | 114-8151 | 2 | Plug-Drain |
| 50 | 98-7524 | 2 | Gasket |
| 60 | 108-1401 | 1 | Base-Filter |
| 70 | 98-7526 | 1 | Bolt |
| 80 | 105-3776 | 1 | O-Ring |
| 90 | 104-9348 | 1 | Gauge-Oil |
| 100 | 105-4580 | 1 | Guide-Gauge, Oil |
| 110 | 110-3720 | 1 | Plug-Gauge, Oil |

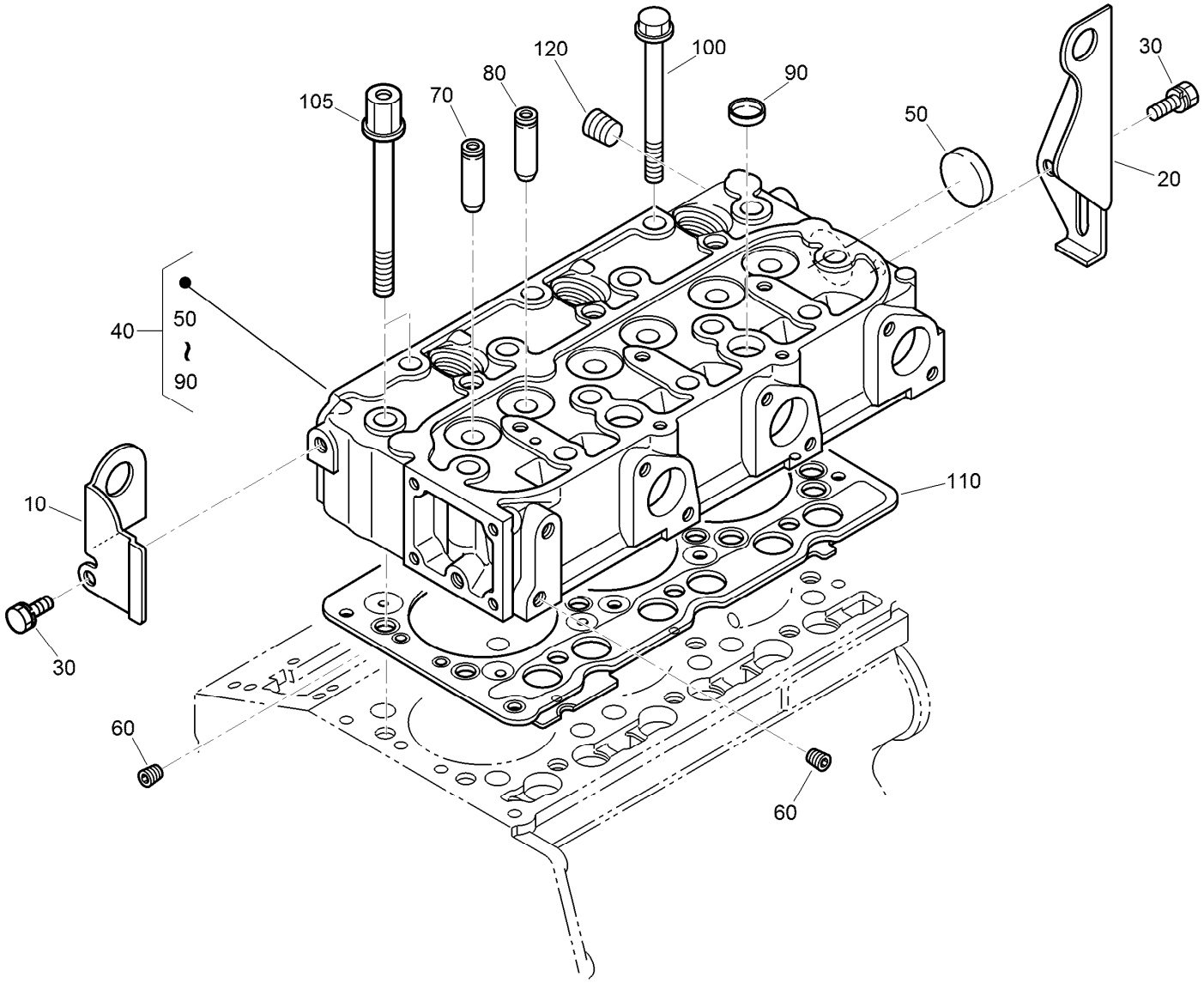


# Cylinder Head Assembly

| Ref. | Part Number | Qty. | Description |
|---|---|---|---|
| 10 | 130-1231 | 1 | Hook-Engine |
| 20 | 98-9478 | 1 | Hook-Engine |
| 30 | 100-9195 | 2 | Bolt |
| 40 | 130-1544 | 1 | Cylinder Head ASM |
| 50 | 105-3705 | 1 | Cap-Sealing |
| 60 | 98-9687 | 2 | Plug |
| 70 | 107-9066 | 3 | Guide-Valve, Inlet |
| 80 | 107-9067 | 3 | Guide-Valve, Exhaust |
| 90 | 98-9389 | 2 | Cap-Sealing |
| 100 | 98-9479 | 12 | Bolt-Head, Cylinder |
| 105 | 98-9647 | 2 | Bolt-Head, Cylinder |
| 110 | 108-6573 | 1 | Gasket-Head, Cylinder |
| 120 | 98-9444 | 1 | Plug |

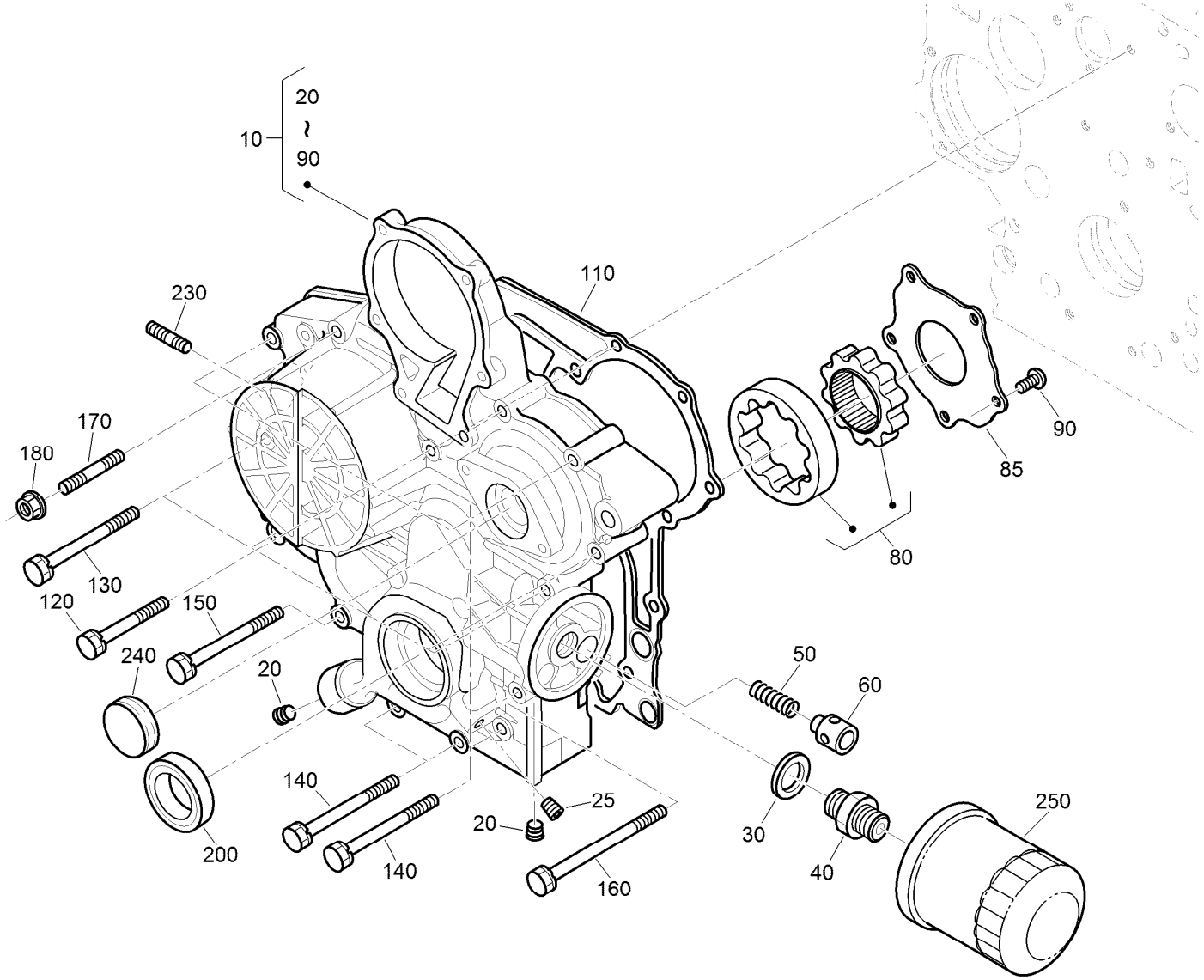


# Gear Case and Oil Filter Cartridge Assembly

| Ref. | Part Number | Qty. | Description |
|---|---|---|---|
| 10 | 130-1243 | 1 | *obs* Gear Case ASM |
| 20 | 98-9598 | 2 | Plug |
| 25 | 98-7487 | 1 | Plug |
| 30 | 98-7562 | 1 | Washer-Plain |
| 40 | 98-9388 | 1 | Joint-Pipe |
| 50 | 130-1511 | 1 | Spring |
| 60 | 130-1510 | 1 | Valve-Relief |
| 80 | 130-1508 | 1 | Rotor ASM |
| 85 | 130-1509 | 1 | Cover-Pump, Oil |
| 90 | 130-1164 | 5 | Screw-Binding |
| 110 | 98-9633 | 1 | Gasket-Case, Gear |

| Ref. | Part Number | Qty. | Description |
|---|---|---|---|
| 120 | 100-1765 | 3 | Bolt |
| 130 | 125-9063 | 4 | Bolt-Sems |
| 140 | 98-9356 | 4 | Bolt |
| 150 | 107-9074 | 1 | Bolt |
| 160 | 98-9586 | 1 | Bolt |
| 170 | 105-3709 | 1 | Stud |
| 180 | 100-2203 | 1 | Nut-Flange |
| 200 | 119-8038 | 1 | Seal-Oil |
| 230 | 105-3710 | 2 | Stud |
| 240 | 98-9641 | 1 | Cover-Case, Gear |
| 250 | 130-1569 | 1 | Cartridge-Filter, Oil |

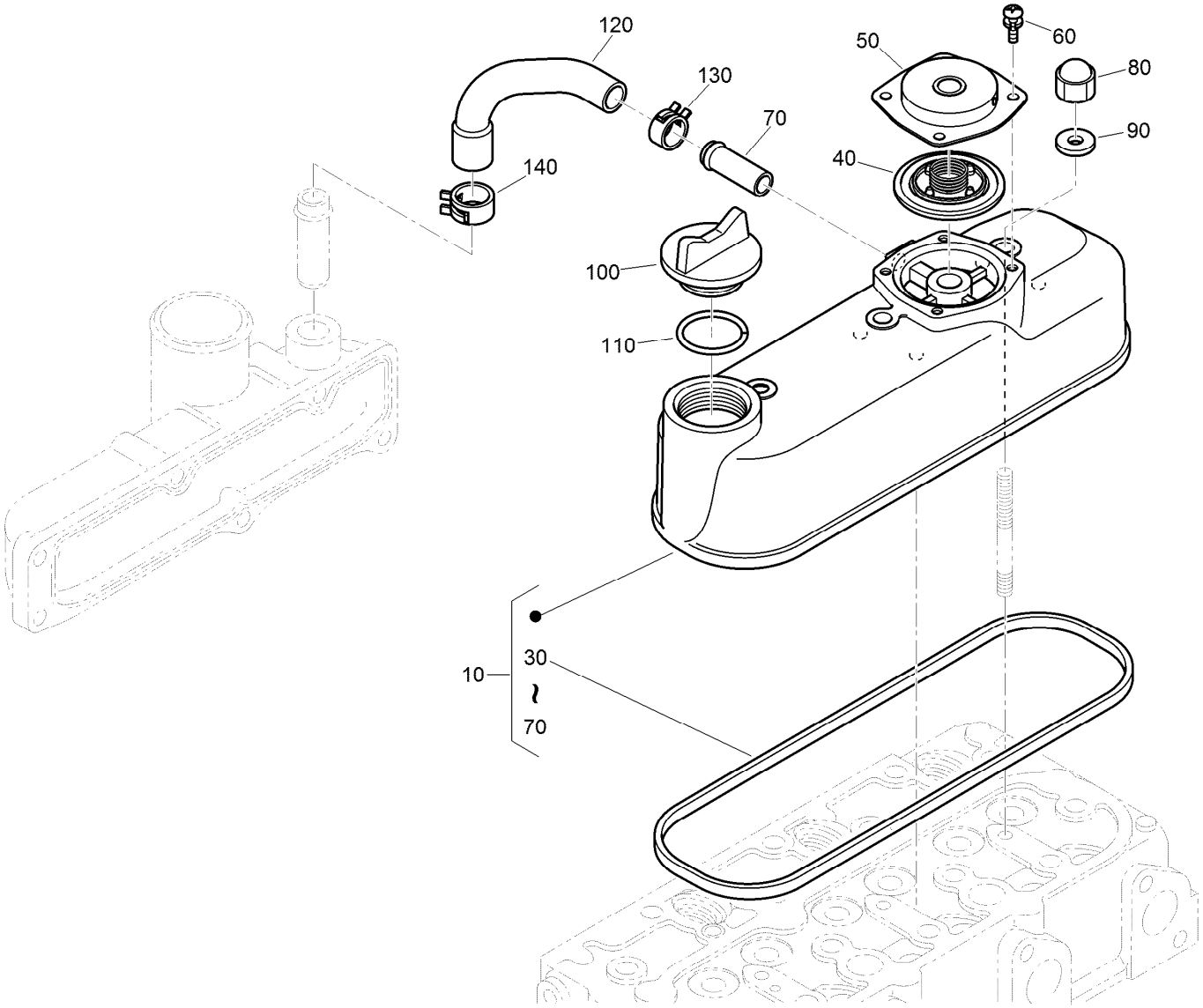


# Cylinder Head Cover Assembly

| *Ref.* | *Part Number* | *Qty.* | *Description* |
|---|---|---|---|
| 10 | 130-1372 | 1 | Cylinder Head Cover ASM |
| 30 | 130-1249 | 1 | Gasket-Head Cover |
| 40 | 110-3715 | 1 | Valve-Breather |
| 50 | 110-3714 | 1 | Cover-Breather |
| 60 | 98-9364 | 4 | Screw (With Washer) |
| 70 | 98-7766 | 1 | Pipe-Return, Water |
| 80 | 98-9455 | 3 | Nut-Cap |
| 90 | 98-9454 | 3 | Gasket |
| 100 | 107-9075 | 1 | Plug-Filler, Oil |
| 110 | 99-3446 | 1 | O-Ring |
| 120 | 107-7836 | 1 | Tube-Breather |
| 130 | 108-2859 | 1 | Clamp-Hose |
| 140 | 108-2860 | 1 | Clamp-Hose |

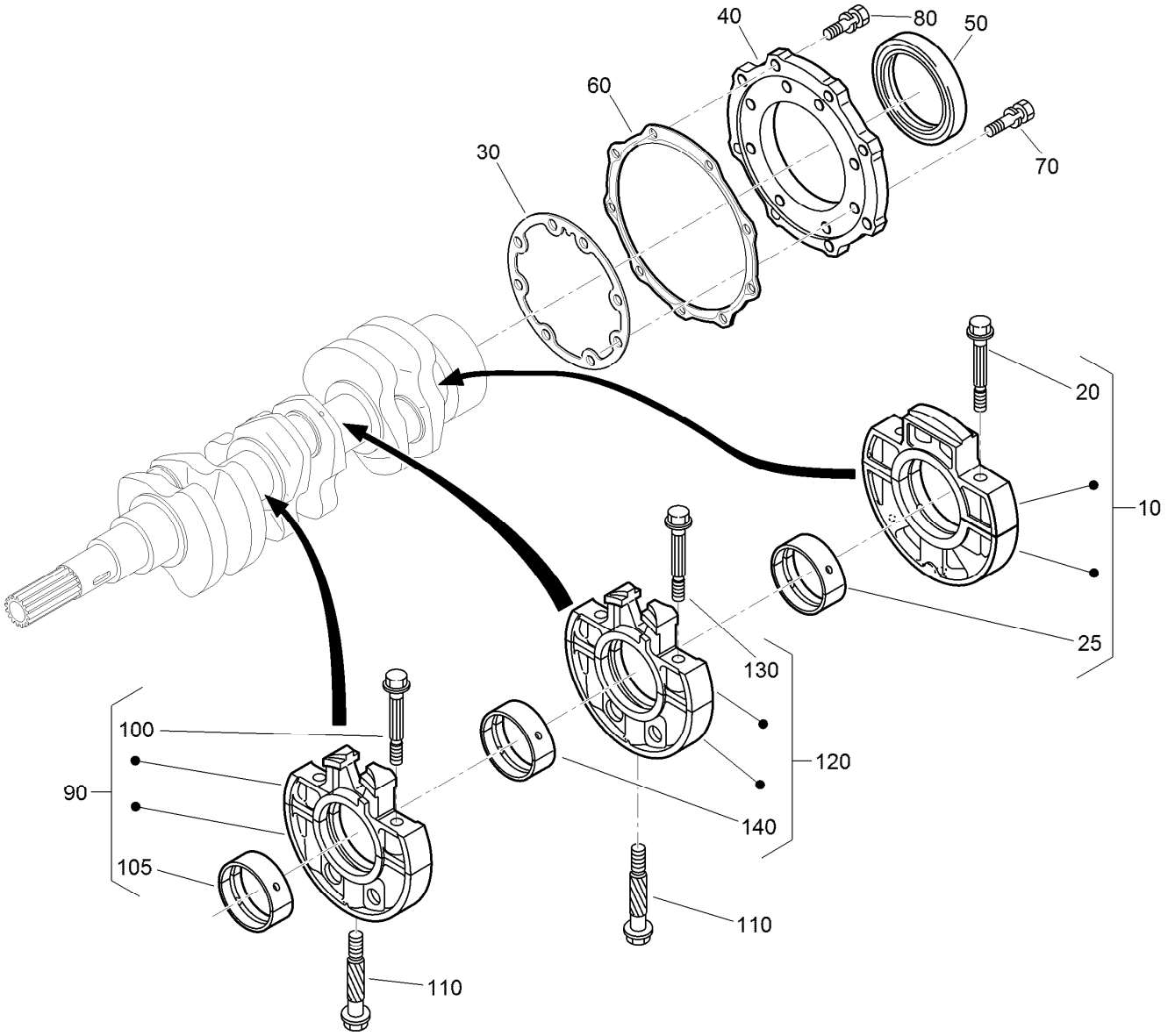


# Main Bearing Case Assembly

| Ref. | Part Number | Qty. | Description |
|---|---|---|---|
| 10 | 112-7026 | 1 | Wheel Bearing Case ASM |
| 20 | 98-9484 | 2 | Bolt-Case, Bearing |
| 25 | 115-4121 | 1 | Metal-Crankshaft (STD) |
| 25 | 112-7039 | 1 | Metal-Crankshaft (0.2Mm) |
| 25 | 112-7040 | 1 | Metal-Crankshaft (-0.4Mm) |
| 30 | 127-0440 | 1 | Gasket-Case, Bearing |
| 40 | 112-7046 | 1 | Cover-Case, Bearing |
| 50 | 112-0180 | 1 | Seal-Oil |
| 60 | 112-7037 | 1 | Gasket-Cover, Case |
| 70 | 127-0441 | 8 | Bolt |
| 80 | 127-0442 | 9 | Bolt |

| Ref. | Part Number | Qty. | Description |
|---|---|---|---|
| 90 | 115-4106 | 1 | Main Bearing Case ASM |
| 100 | 98-9484 | 2 | Bolt-Case, Bearing |
| 105 | 98-9524 | 1 | Metal-Crankshaft (STD Set) |
| 105 | 127-0433 | 1 | Metal-Crankshaft (-0.2MM) |
| 105 | 98-9531 | 1 | Bearing-Main (0.4MM) |
| 110 | 98-9485 | 2 | Bolt-Case, Bearing |
| 120 | 115-4107 | 1 | Main Bearing Case ASM |
| 130 | 98-9484 | 2 | Bolt-Case, Bearing |
| 140 | 98-9524 | 1 | Metal-Crankshaft (STD Set) |
| 140 | 127-0433 | 1 | Metal-Crankshaft (-0.2MM) |
| 140 | 98-9531 | 1 | Bearing-Main (0.4MM) |

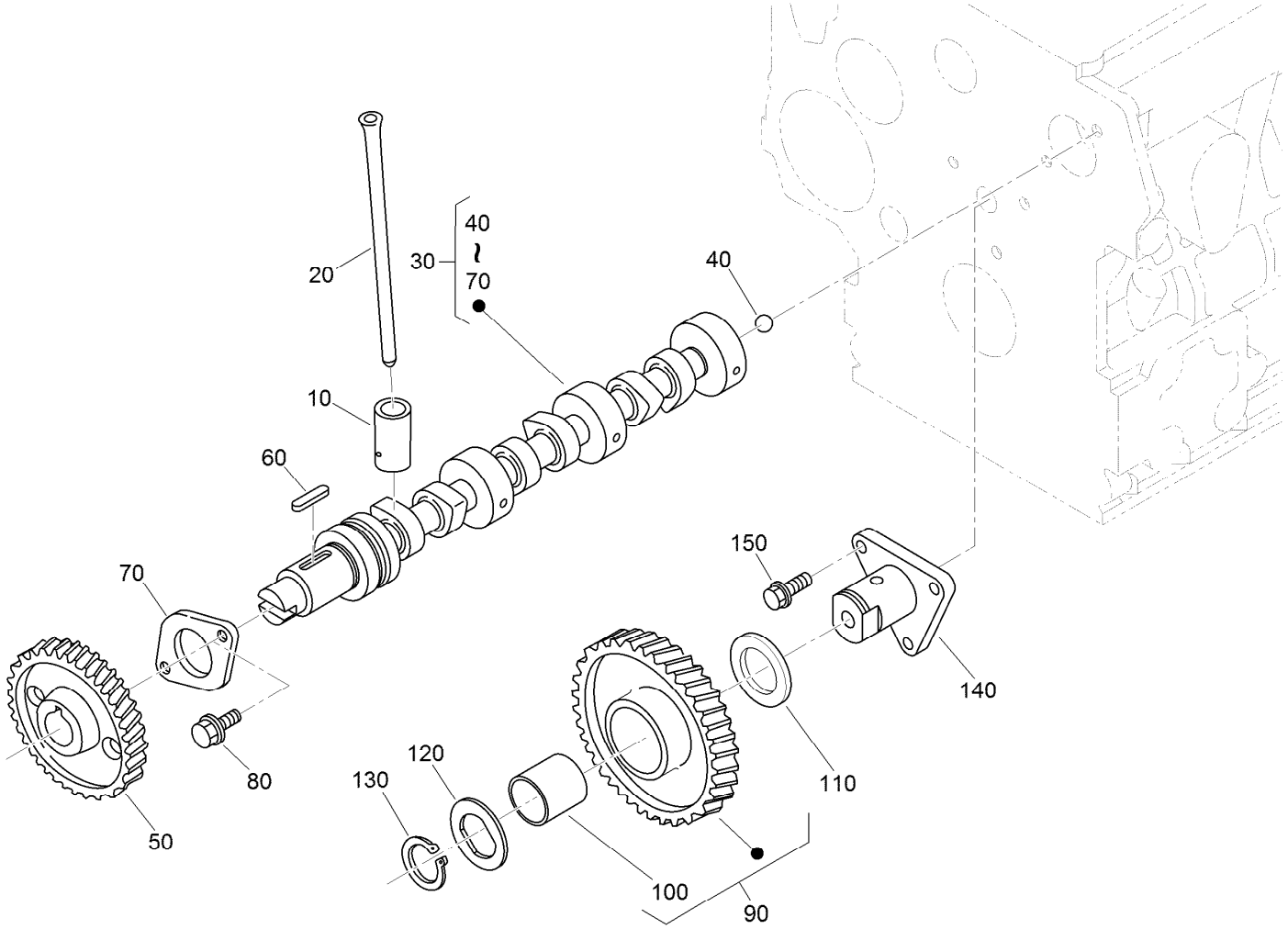


# Camshaft and Idle Gear Shaft Assembly

| Ref. | Part Number | Qty. | Description |
|---|---|---|---|
| 10 | 112-0185 | 6 | Tappet |
| 20 | 127-0421 | 6 | Rod-Push |
| 30 | 130-1545 | 1 | Camshaft ASM |
| 40 | 110-3729 | 1 | Ball |
| 50 | 98-9512 | 1 | Gear-Cam |
| 60 | 98-9378 | 1 | Key-Feather |
| 70 | 98-9510 | 1 | Stopper-Camshaft |
| 80 | 98-7692 | 2 | Bolt |
| 90 | 117-7584 | 1 | Idler Gear ASM |
| 100 | 117-7585 | 1 | Bushing-Gear, Idle |
| 110 | 98-9535 | 1 | Collar-Gear, Idle |
| 120 | 98-9536 | 1 | Collar-Gear, Idle |
| 130 | 98-9534 | 1 | Circlip-Gear, Idle |
| 140 | 98-9533 | 1 | Shaft-Gear, Idle |
| 150 | 98-7692 | 3 | Bolt |

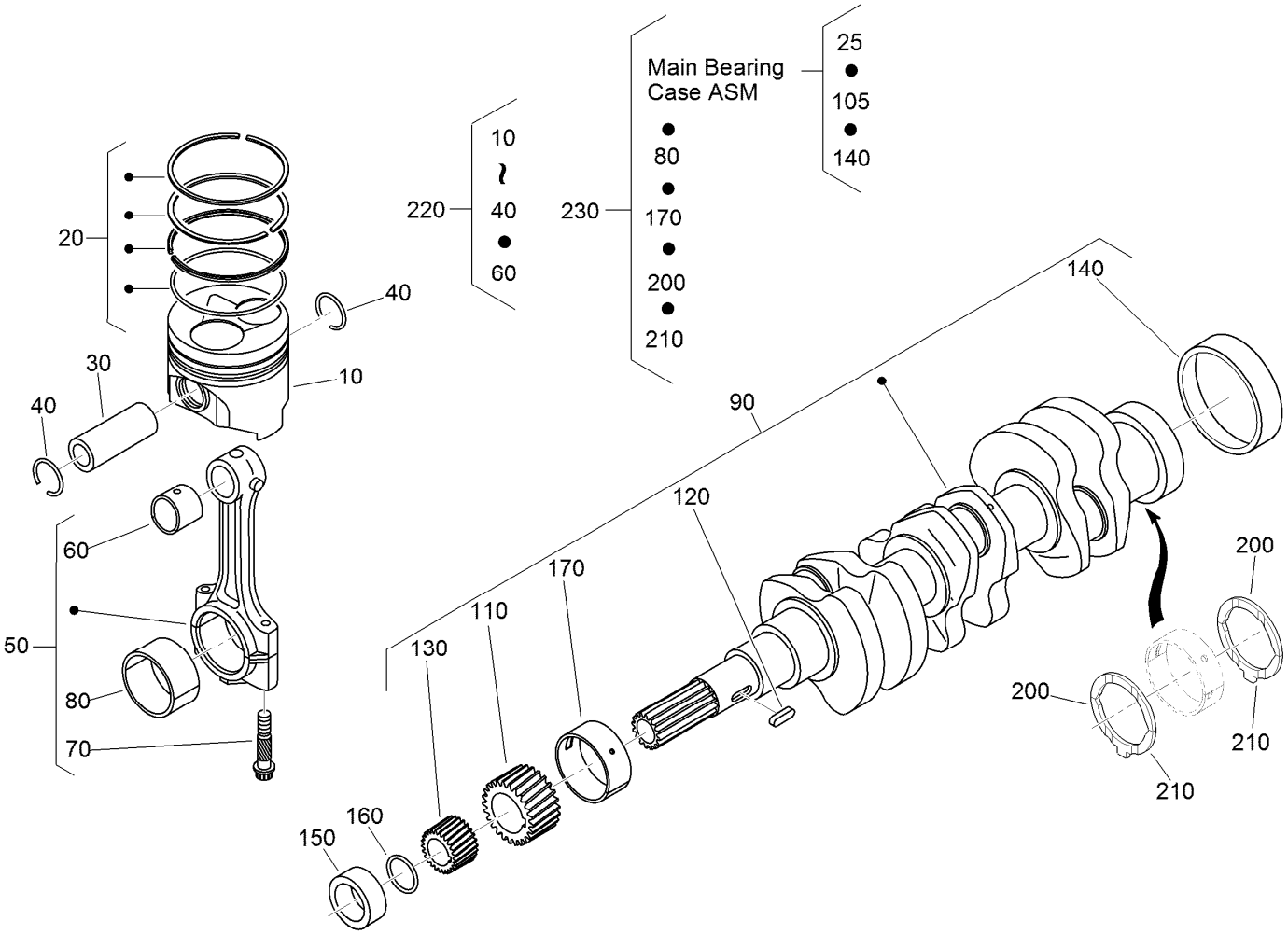


# Piston and Crankshaft Assembly

| Ref. | Part Number | Qty. | Description |
|---|---|---|---|
| 10 | 130-1546 | 3 | Piston (STD) |
| 10 | 130-1549 | 3 | Piston (+0.50MM) |
| 20 | 130-1506 | 3 | Piston Ring ASM (STD) |
| 20 | 130-1507 | 3 | Piston Ring ASM (+0.50MM) |
| 30 | 98-9513 | 3 | Pin-Piston |
| 40 | 98-9514 | 6 | Circlip-Pin, Piston |
| 50 | 117-7586 | 3 | Connecting Rod ASM |
| 60 | 115-3014 | 3 | Bushing-Pin, Piston |
| 70 | 98-9517 | 6 | Bolt-Rod, Connecting |
| 80 | 98-9553 | 3 | Bearing-Rod (STD) |
| 80 | 117-7587 | 3 | Metal-Crankpin (-0.2MM) |
| 80 | 117-7588 | 3 | Metal-Crankpin (-0.4MM) |
| 90 | 130-1375 | 1 | Crankshaft ASM |
| 110 | 117-7561 | 1 | Gear-Crankshaft |
| 120 | 98-9666 | 1 | Key |
| 130 | 127-0445 | 1 | Gear-Drive, Oil Pump |
| 140 | 98-9522 | 1 | Sleeve-Crankshaft |
| 150 | 127-0444 | 1 | Collar-Crankshaft |

| Ref. | Part Number | Qty. | Description |
|---|---|---|---|
| 160 | 105-3783 | 1 | O-Ring |
| 170 | 112-7005 | 1 | Bearing-Main (STD) |
| 170 | 98-9528 | 1 | Bearing-Main (-0.2MM) |
| 170 | 130-1274 | 1 | Metal-Crankshaft (-0.40Mm) |
| 200 | 98-9413 | 2 | Bearing-Thrust (STD) |
| 200 | 127-0416 | 2 | Metal-Side (+0.2Mm) |
| 200 | 127-0417 | 2 | Metal-Side (+0.40Mm) |
| 210 | 98-9688 | 2 | Bearing-Thrust (STD) |
| 210 | 127-0437 | 2 | Metal-Side (+0.2MM) |
| 210 | 127-0438 | 2 | Metal-Side (+0.40MM) |
| 220 | 130-1547 | 3 | Piston Kit |
| 220 | 130-1548 | 3 | Piston Kit |
| 230 | 130-1501 | 1 | Engine Metal Kit (STD) |
| 230 | 130-1498 | 1 | Engine Metal Kit (-0.20Mm/+0.20Mm) |
| 230 | 130-1499 | 1 | Engine Metal Kit (-0.40Mm/+0.40Mm) |

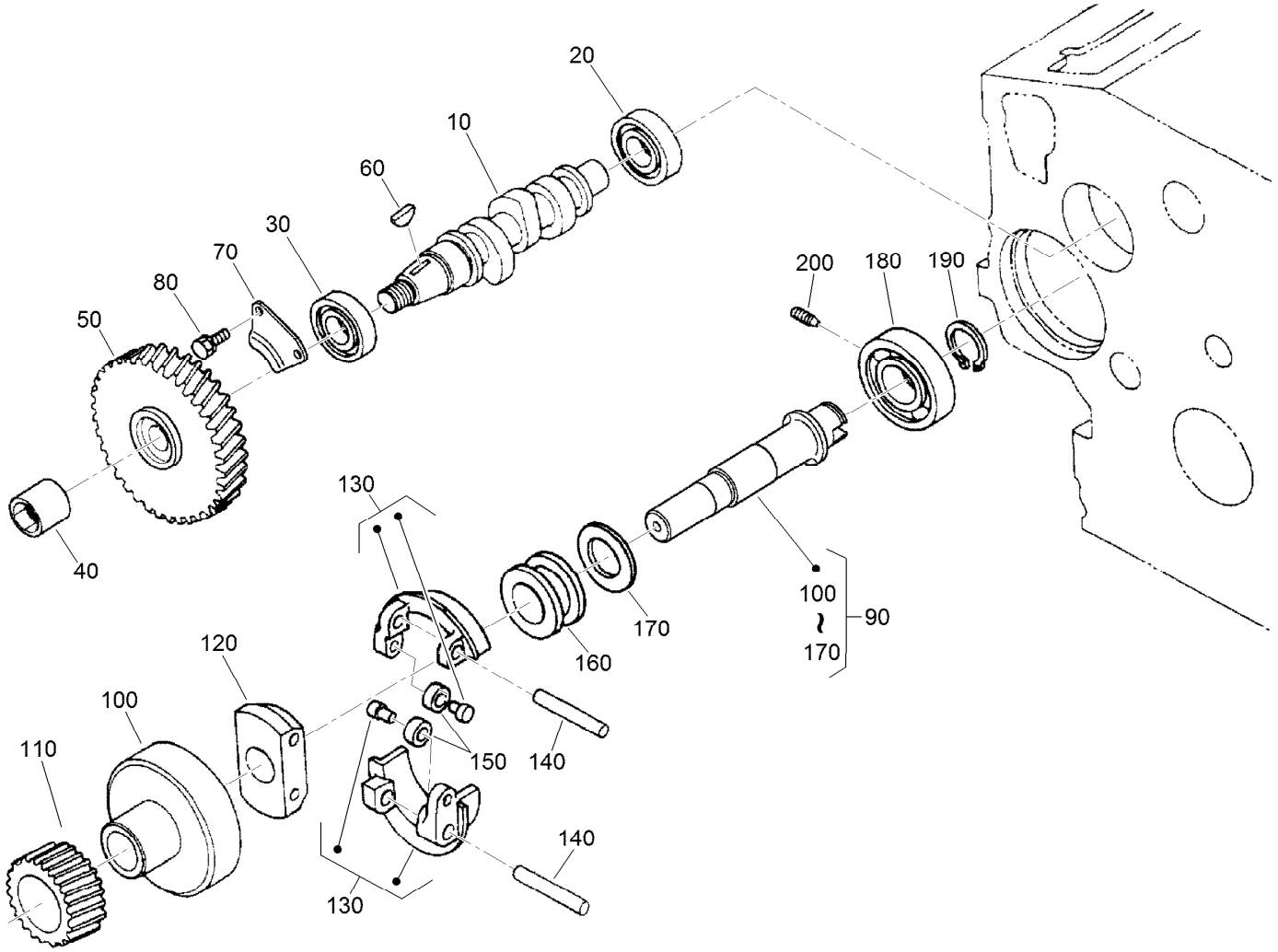


# Fuel Camshaft and Governor Shaft Assembly

| Ref. | Part Number | Qty. | Description |
|---|---|---|---|
| 10 | 98-9459 | 1 | Camshaft-Fuel |
| 20 | 107-9077 | 1 | Bearing-Ball |
| 30 | 107-9078 | 1 | Bearing-Ball |
| 40 | 130-1512 | 1 | Nut |
| 50 | 120-2562 | 1 | Gear-Pump, Injection |
| 60 | 98-9595 | 1 | Key-Woodruff |
| 70 | 98-9511 | 1 | Stopper-Fuel, Camshaft |
| 80 | 98-7692 | 2 | Bolt |
| 90 | 130-1255 | 1 | Governor Shaft ASM |
| 100 | 98-9562 | 1 | Holder-Gear, Governor |

| Ref. | Part Number | Qty. | Description |
|---|---|---|---|
| 110 | 98-9673 | 1 | Gear-Governor |
| 120 | 98-9561 | 1 | Holder-Weight, Governor |
| 130 | 130-1240 | 2 | Governor Weight ASM |
| 140 | 98-9560 | 2 | Shaft-Weight, Governor |
| 150 | 98-9692 | 2 | Roller |
| 160 | 98-9563 | 1 | Sleeve-Governor |
| 170 | 98-9564 | 1 | Washer-Thrust |
| 180 | 107-9079 | 1 | Bearing-Ball |
| 190 | 98-9657 | 1 | Circlip-Shaft, Governor |
| 200 | 98-9565 | 1 | Screw-Set |

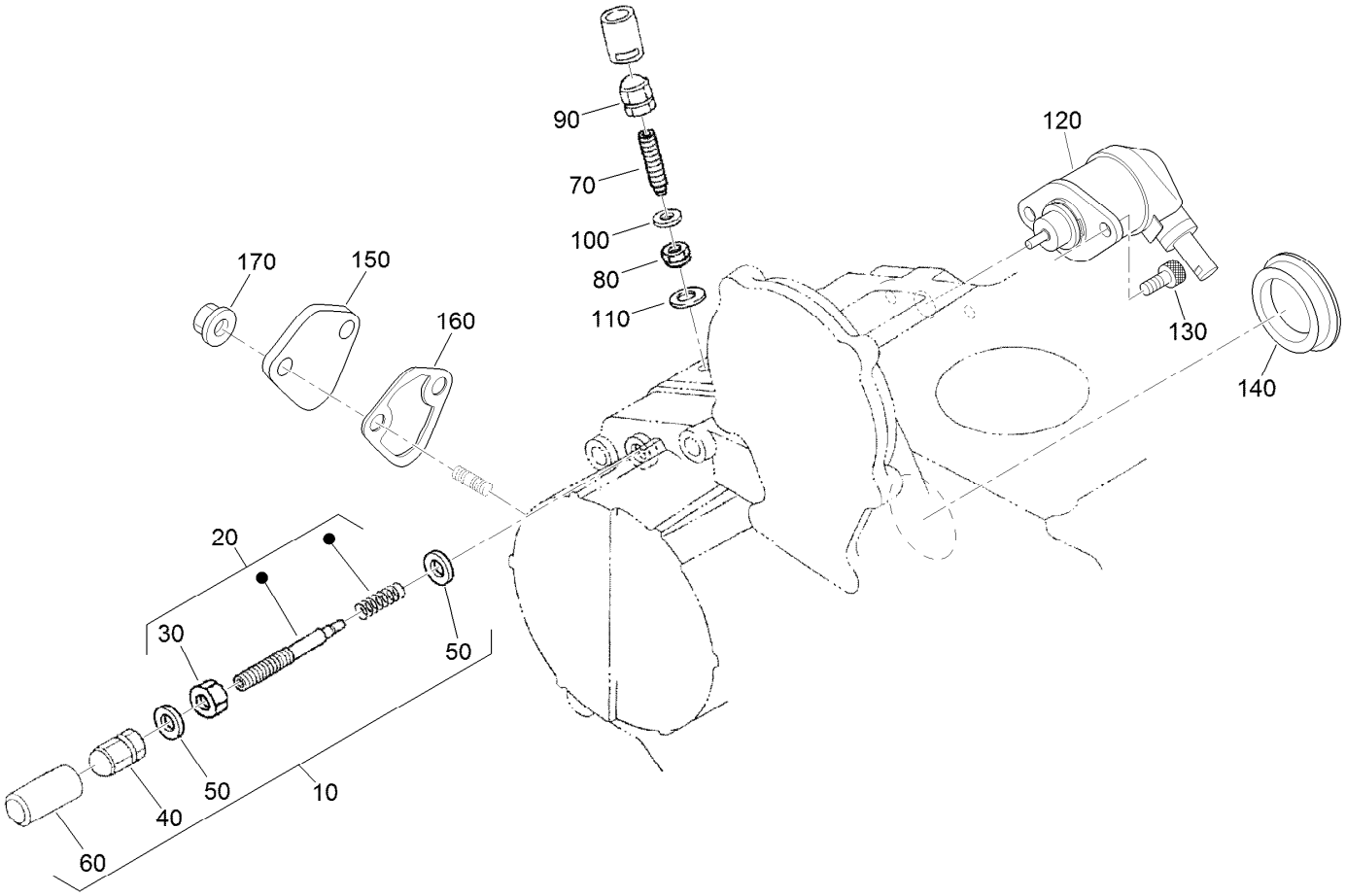


# Idle Apparatus and Stop Solenoid Assembly

| Ref. | Part Number | Qty. | Description |
|---|---|---|---|
| 10 | 98-9678 | 1 | Idle Apparatus ASM |
| 20 | 112-7014 | 1 | Adjusting Bolt ASM |
| 30 | 98-9439 | 1 | Nut |
| 40 | 112-0181 | 1 | Nut |
| 50 | 98-7654 | 2 | Gasket |
| 60 | 98-7656 | 1 | Cap |
| 70 | 112-7015 | 1 | Bolt-Adjusting |
| 80 | 100-2175 | 1 | Nut-Lock |
| 90 | 112-0181 | 1 | Nut |

| Ref. | Part Number | Qty. | Description |
|---|---|---|---|
| 100 | 98-7654 | 1 | Gasket |
| 110 | 107-9081 | 1 | Gasket |
| 120 | 104-5155 | 1 | Solenoid-Stop |
| 130 | 130-1155 | 2 | Screw-HSH |
| 140 | 112-7016 | 1 | Cover-Pump |
| 150 | 99-3514 | 1 | Cover |
| 160 | 117-7562 | 1 | Gasket-Pump, Fuel |
| 170 | 100-2203 | 2 | Nut-Flange |

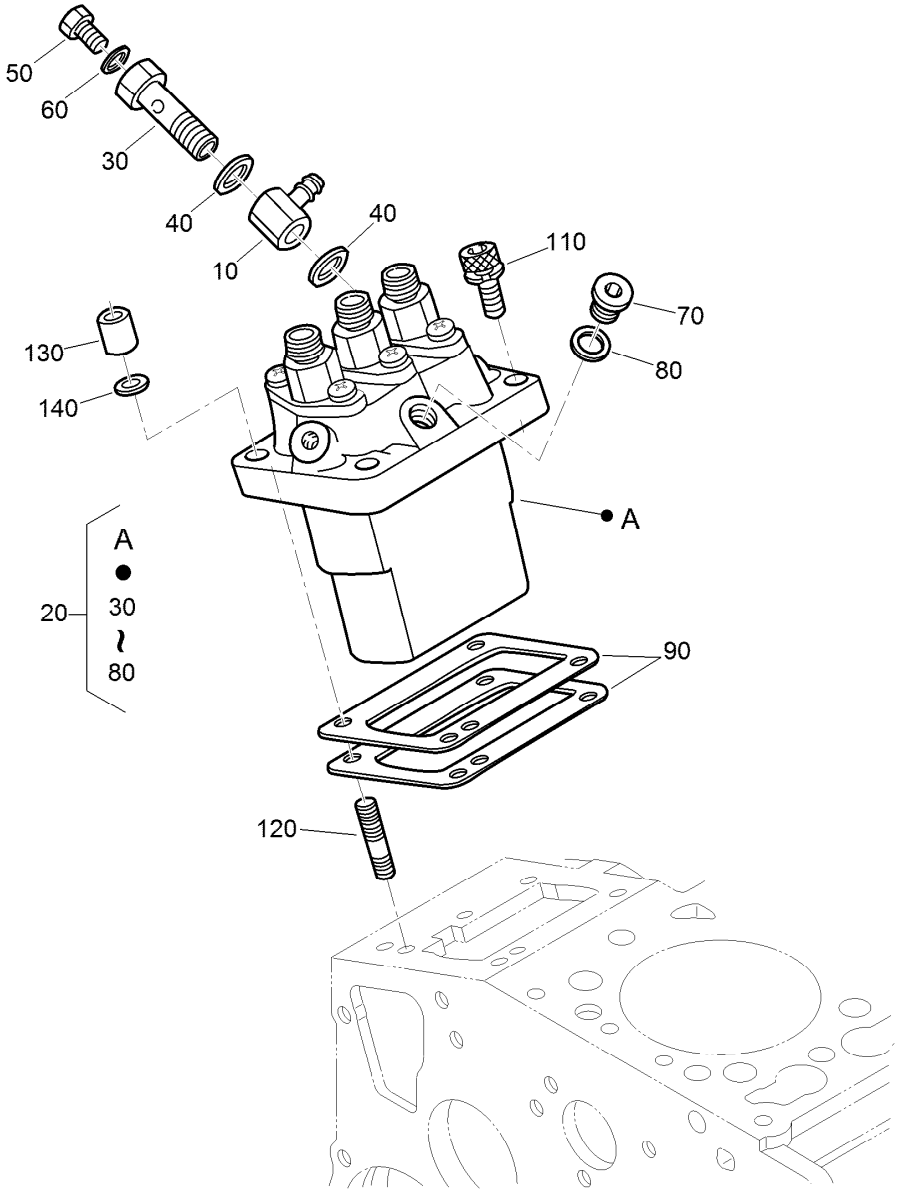


# Injection Pump Assembly

| Ref. | Part Number | Qty. | Description |
|---|---|---|---|
| 10 | 98-9596 | 1 | Joint-Eye |
| 20 | 98-9643 | 1 | Injection Pump ASM |
| 30 | 98-9464 | 1 | Bolt-Joint |
| 40 | 98-9445 | 2 | Gasket |
| 50 | 98-9430 | 1 | Screw |
| 60 | 98-9446 | 1 | Gasket |
| 70 | 98-9466 | 1 | Plug |
| 80 | 98-9451 | 1 | Gasket |
| 90 | 98-9456 | 1 | Shim-Injection (0.20MM) |

| Ref. | Part Number | Qty. | Description |
|---|---|---|---|
| 90 | 98-9457 | 1 | Shim-Injection (0.25MM) |
| 90 | 98-9458 | 1 | Shim-Injection (0.30MM) |
| 90 | 115-3046 | 1 | Shim-Injection (0.35MM) |
| 90 | 115-3045 | 1 | Shim-Injection (0.175MM) |
| 110 | 117-7564 | 2 | Bolt-Hex Soc HD |
| 120 | 98-9438 | 2 | Stud |
| 130 | 98-9440 | 2 | Nut-Cap |
| 140 | 98-7699 | 2 | Washer-Spring |

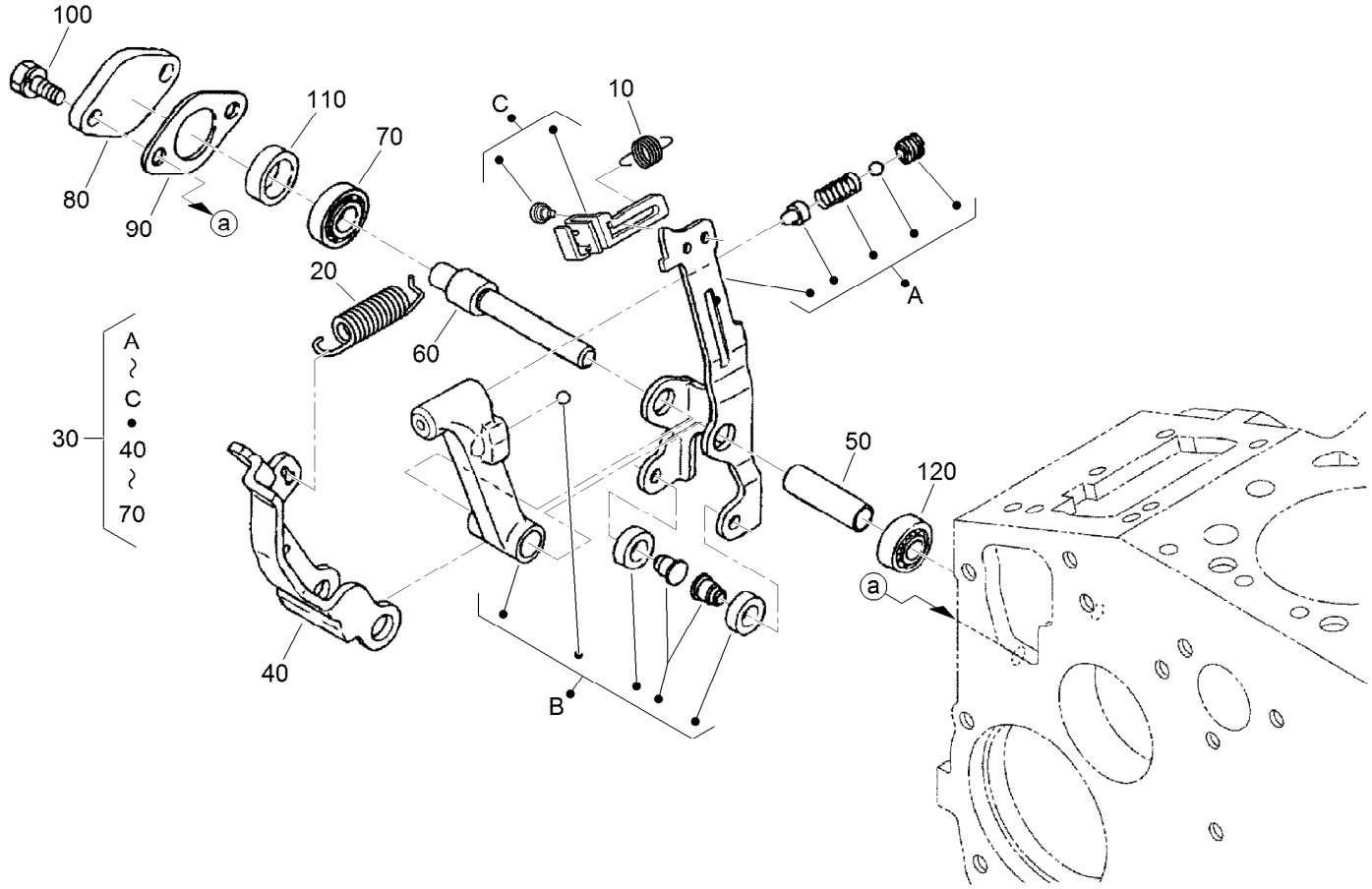


# Governor Assembly

| *Ref.* | *Part Number* | *Qty.* | *Description* |
|---|---|---|---|
| 10 | 105-3786 | 1 | Spring-Start |
| 20 | 98-9681 | 1 | Spring-Governor |
| 30 | 115-4502 | 1 | Fork Lever ASM |
| 40 | 107-9084 | 1 | Lever-Fork |
| 50 | 107-9085 | 1 | Shaft-Lever, Fork |
| 60 | 107-9086 | 1 | Shaft-Lever, Fork |
| 70 | 98-9570 | 1 | Bearing-Miniaturize |
| 80 | 115-4122 | 1 | Cover-Shaft, Fork Lever |
| 90 | 98-9682 | 1 | Gasket |
| 100 | 98-9350 | 2 | Bolt |
| 110 | 98-9567 | 1 | Collar |
| 120 | 98-9571 | 1 | Bearing-Miniaturize |

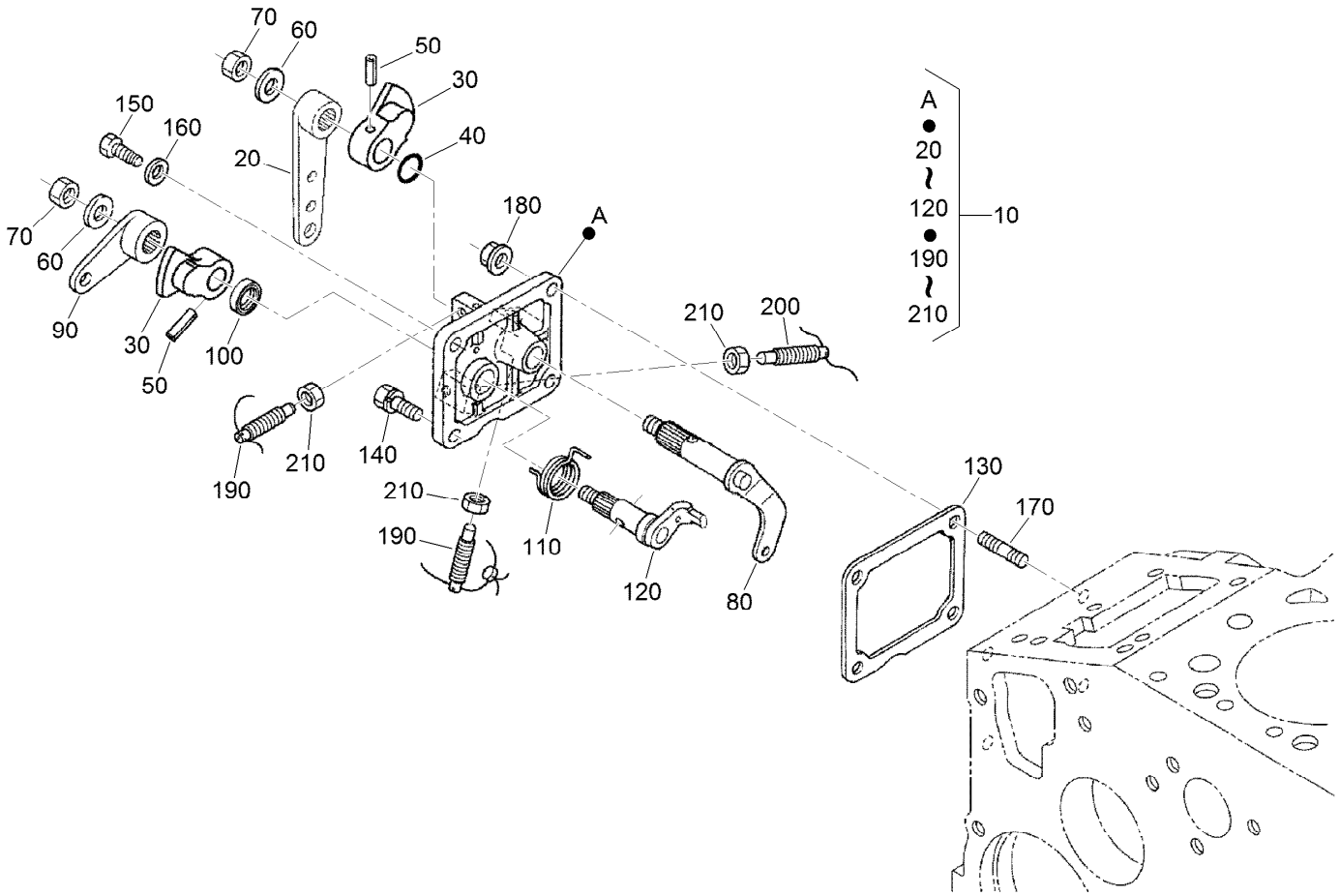


# Speed Control Plate Assembly

| Ref. | Part Number | Qty. | Description |
|---|---|---|---|
| 10 | 105-3735 | 1 | Control Plate ASM |
| 20 | 98-9662 | 1 | Lever-Control, Speed |
| 30 | 98-9572 | 2 | Lever-Control, Speed |
| 40 | 105-3788 | 1 | O-Ring |
| 50 | 98-7602 | 2 | Pin-Spring |
| 60 | 98-9594 | 2 | Washer-Plain |
| 70 | 98-9589 | 2 | Nut |
| 80 | 98-9658 | 1 | Governor Lever ASM |
| 90 | 98-9663 | 1 | Lever-Stop, Engine |
| 100 | 98-7601 | 1 | Seal-Oil |
| 110 | 98-9472 | 1 | Spring-Return |
| 120 | 98-9664 | 1 | Shaft-Lever, Stop |
| 130 | 98-9637 | 1 | Gasket |
| 140 | 98-7692 | 1 | Bolt |
| 150 | 127-0401 | 1 | Bolt-Hex |
| 160 | 98-7654 | 1 | Gasket |
| 170 | 105-3710 | 2 | Stud |
| 180 | 100-2203 | 2 | Nut-Flange |
| 190 | 117-7565 | 2 | Bolt-Adjusting |
| 200 | 117-7566 | 1 | Bolt-Adjusting |
| 210 | 98-7572 | 3 | Nut |

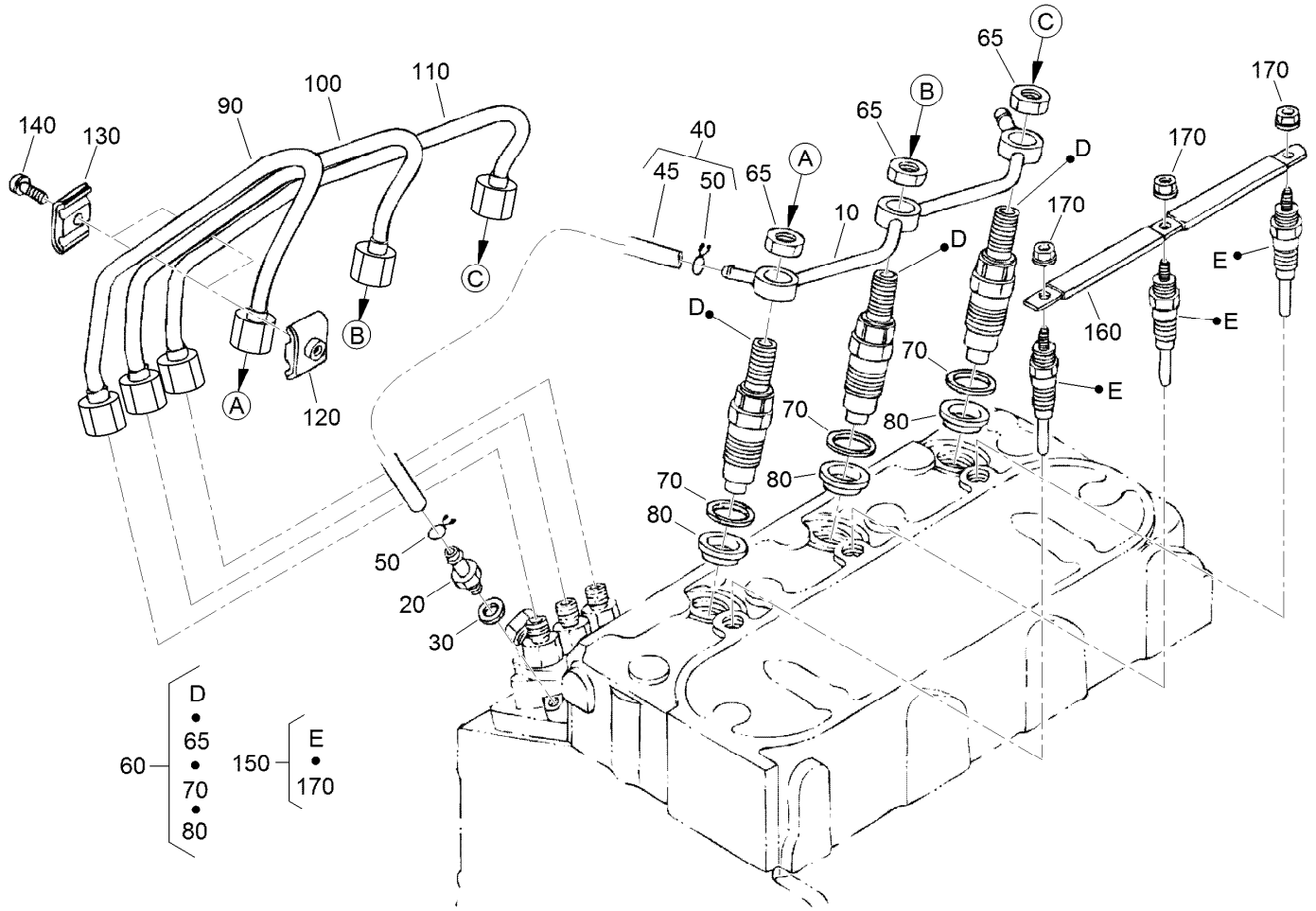


# Nozzle Holder and Glow Plug Assembly

| Ref. | Part Number | Qty. | Description |
|---|---|---|---|
| 10 | 98-9620 | 1 | Overflow Pipe ASM |
| 20 | 98-9431 | 1 | Screw-Bleeder, Air |
| 30 | 98-7654 | 1 | Gasket |
| 40 | 98-9420 | 1 | Overflow Pipe ASM |
| 45 | 112-0182 | 1 | Pipe-Overflow |
| 50 | 98-7671 | 2 | Clip-Pipe |
| 60 | 130-1410 | 3 | Nozzle Holder Kit |
| 65 | 121-2411 | 3 | Nut |
| 70 | 98-7676 | 3 | Gasket |
| 80 | 98-7677 | 3 | Seal-Heat |

| Ref. | Part Number | Qty. | Description |
|---|---|---|---|
| 90 | 98-9622 | 1 | Pipe-Injection |
| 100 | 98-9654 | 1 | Pipe-Injection |
| 110 | 98-9655 | 1 | Pipe-Injection |
| 120 | 98-7682 | 2 | Clamp-Pipe |
| 130 | 98-7683 | 2 | Clamp-Pipe |
| 140 | 98-7684 | 2 | Screw (W/Washer) |
| 150 | 130-1411 | 3 | Plug-Glow |
| 160 | 98-9631 | 1 | Cord-Plug, Glow |
| 170 | 99-8377 | 3 | Nut-Flange |

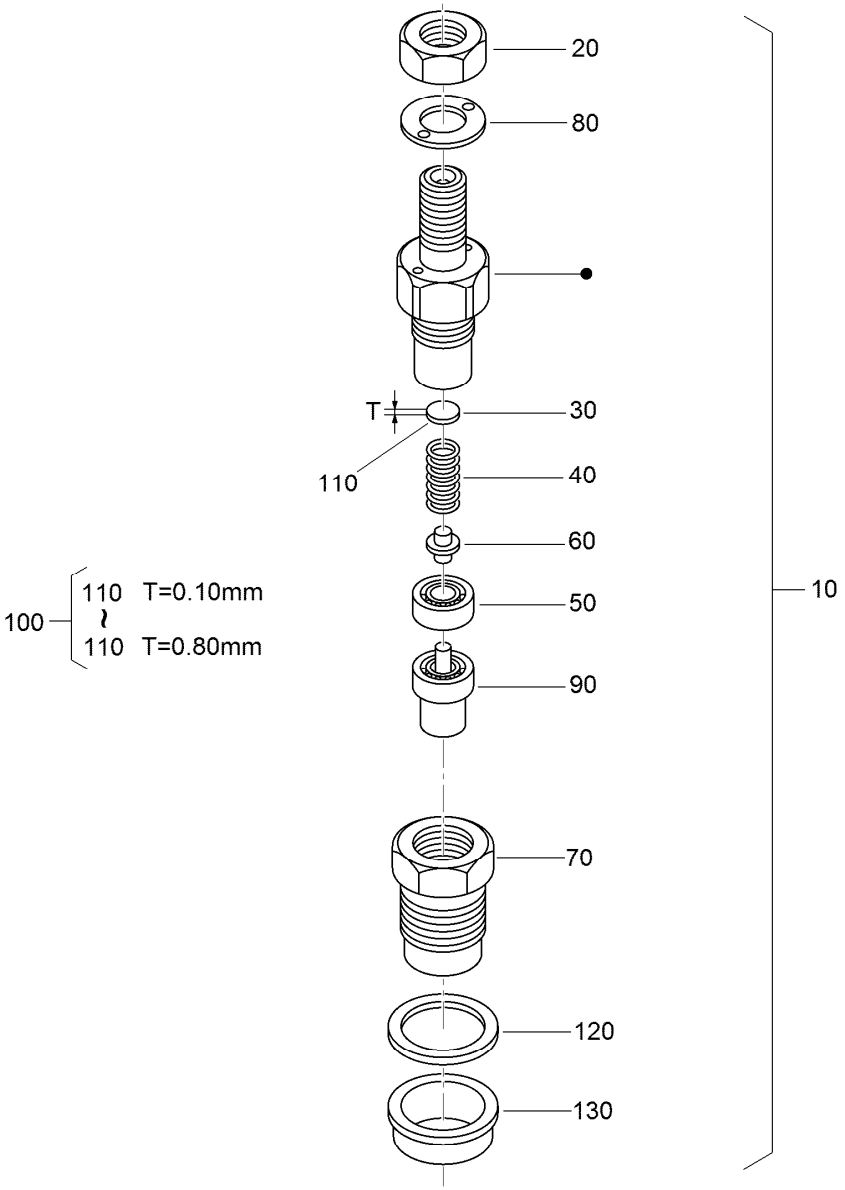


# Nozzle Holder Assembly

| Ref. | Part Number | Qty. | Description |
|---|---|---|---|
| 10 | 130-1410 | 3 | Nozzle Holder Kit |
| 20 | 121-2411 | 3 | Nut |
| 30 | 99-8302 | 3 | Washer-Adjusting |
| 40 | 99-8303 | 3 | Spring-Nozzle |
| 50 | 99-8304 | 3 | Spacer-Distance |
| 60 | 99-8305 | 3 | Rod-Push |
| 70 | 99-8306 | 3 | Nut-Nozzle |
| 80 | 99-8307 | 3 | Washer-Plain |
| 90 | 115-3020 | 3 | Piece-Nozzle |
| 100 | 99-8309 | 3 | Adjusting Washer ASM |
| 110 | 99-8310 | 3 | Washer-Adjust (0.10MM) |

| Ref. | Part Number | Qty. | Description |
|---|---|---|---|
| 110 | 99-8311 | 3 | Washer-Adjust (0.20MM) |
| 110 | 99-8312 | 3 | Washer-Adjust (0.30MM) |
| 110 | 99-8313 | 3 | Washer-Adjust (0.40MM) |
| 110 | 99-8314 | 3 | Washer-Adjust (0.50MM) |
| 110 | 99-8315 | 3 | Washer-Adjust (0.52MM) |
| 110 | 99-8316 | 3 | Washer-Adjust (0.54MM) |
| 110 | 99-8317 | 3 | Washer-Adjust (0.56MM) |
| 110 | 99-8318 | 3 | Washer-Adjust (0.58MM) |
| 110 | 99-8319 | 3 | Washer-Adjust (0.80MM) |
| 120 | 98-7676 | 3 | Gasket |
| 130 | 98-7677 | 3 | Seal-Heat |

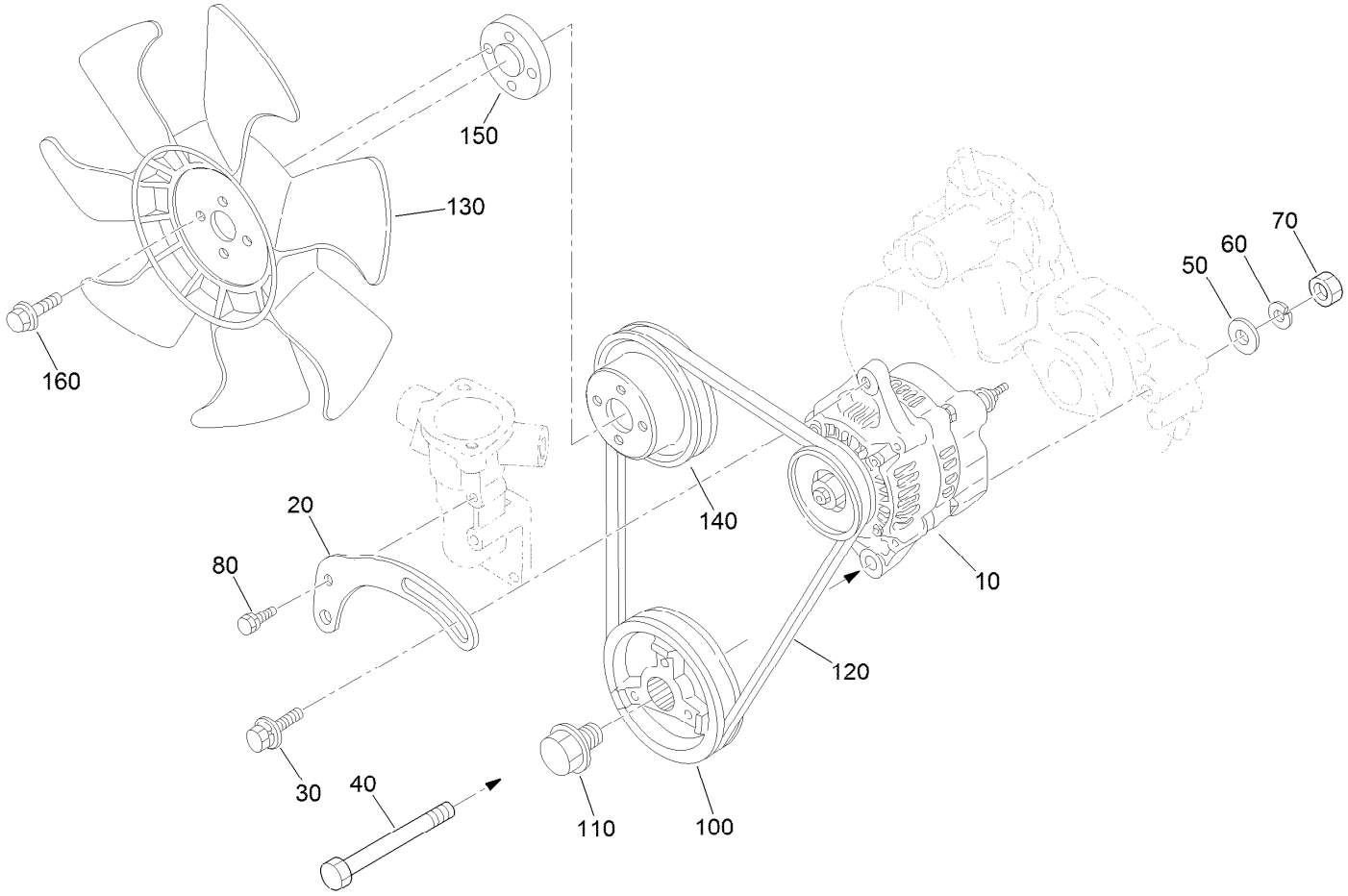


# Alternator, Pulley and Fan Assembly

| Ref. | Part Number | Qty. | Description |
|---|---|---|---|
| 10 | 98-9474 | 1 | Alternator ASM |
| 20 | 112-7047 | 1 | Stay-Dynamo |
| 30 | 108-7088 | 1 | Bolt |
| 40 | 98-9360 | 1 | Bolt |
| 50 | 98-9366 | 1 | Washer-Plain |
| 60 | 98-7738 | 1 | Washer-Spring |
| 70 | 98-7737 | 1 | Nut |
| 80 | 98-7692 | 1 | Bolt |
| 100 | 98-9473 | 1 | Pulley-Drive, Fan |
| 110 | 98-9585 | 1 | Bolt |
| 120 | 104-3494 | 1 | Belt-V |
| 130 | 104-4246 | 1 | Fan-Engine |
| 140 | 130-1567 | 1 | Pulley-Fan |
| 150 | 108-2872 | 1 | Collar-Fan |
| 160 | 108-2873 | 4 | Bolt-Flange |

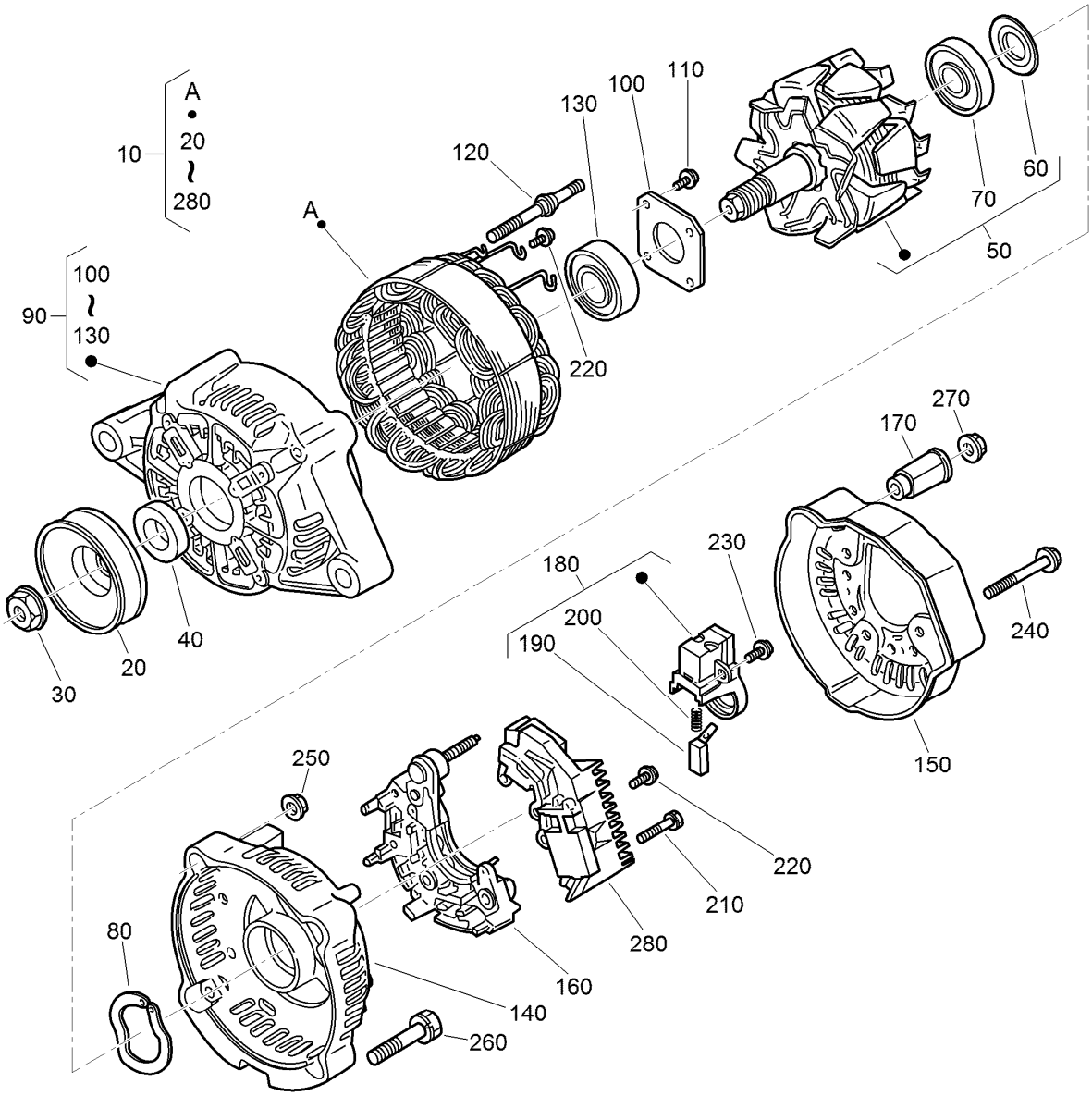


# Alternator Components Assembly

| Ref. | Part Number | Qty. | Description |
|---|---|---|---|
| 10 | 98-9474 | 1 | Alternator ASM |
| 20 | 98-9453 | 1 | Pulley-Dynamo |
| 30 | 98-7708 | 1 | Nut |
| 40 | 98-7709 | 1 | Collar |
| 50 | 107-0136 | 1 | Rotor ASM |
| 60 | 98-7711 | 1 | Cover-Bearing |
| 70 | 107-0138 | 1 | Bearing-Ball |
| 80 | 98-7713 | 1 | Washer-Thrust |
| 90 | 107-0139 | 1 | Drive End Frame ASM |
| 100 | 98-7715 | 1 | Plate-Retainer |
| 110 | 98-7716 | 4 | Screw-Head, Round |
| 120 | 98-7717 | 2 | Bolt-Through |
| 130 | 107-0137 | 1 | Bearing-Ball |
| 140 | 107-9087 | 1 | Frame-End |

| Ref. | Part Number | Qty. | Description |
|---|---|---|---|
| 150 | 107-0140 | 1 | Cover-End |
| 160 | 127-1612 | 1 | Rectifier ASM |
| 170 | 98-7722 | 1 | Bushing-Insulation |
| 180 | 107-0141 | 1 | Brush Holder ASM |
| 190 | 98-7724 | 2 | Brush |
| 200 | 98-7725 | 2 | Spring-Brush |
| 210 | 98-7726 | 2 | Screw-Head, Round |
| 220 | 98-7727 | 6 | Screw-Head, Round |
| 230 | 98-7728 | 1 | Screw-Head, Round |
| 240 | 98-7729 | 3 | Bolt |
| 250 | 98-7730 | 2 | Nut |
| 260 | 98-7731 | 2 | Bolt |
| 270 | 98-7732 | 1 | Nut |
| 280 | 110-3799 | 1 | Regulator ASM |

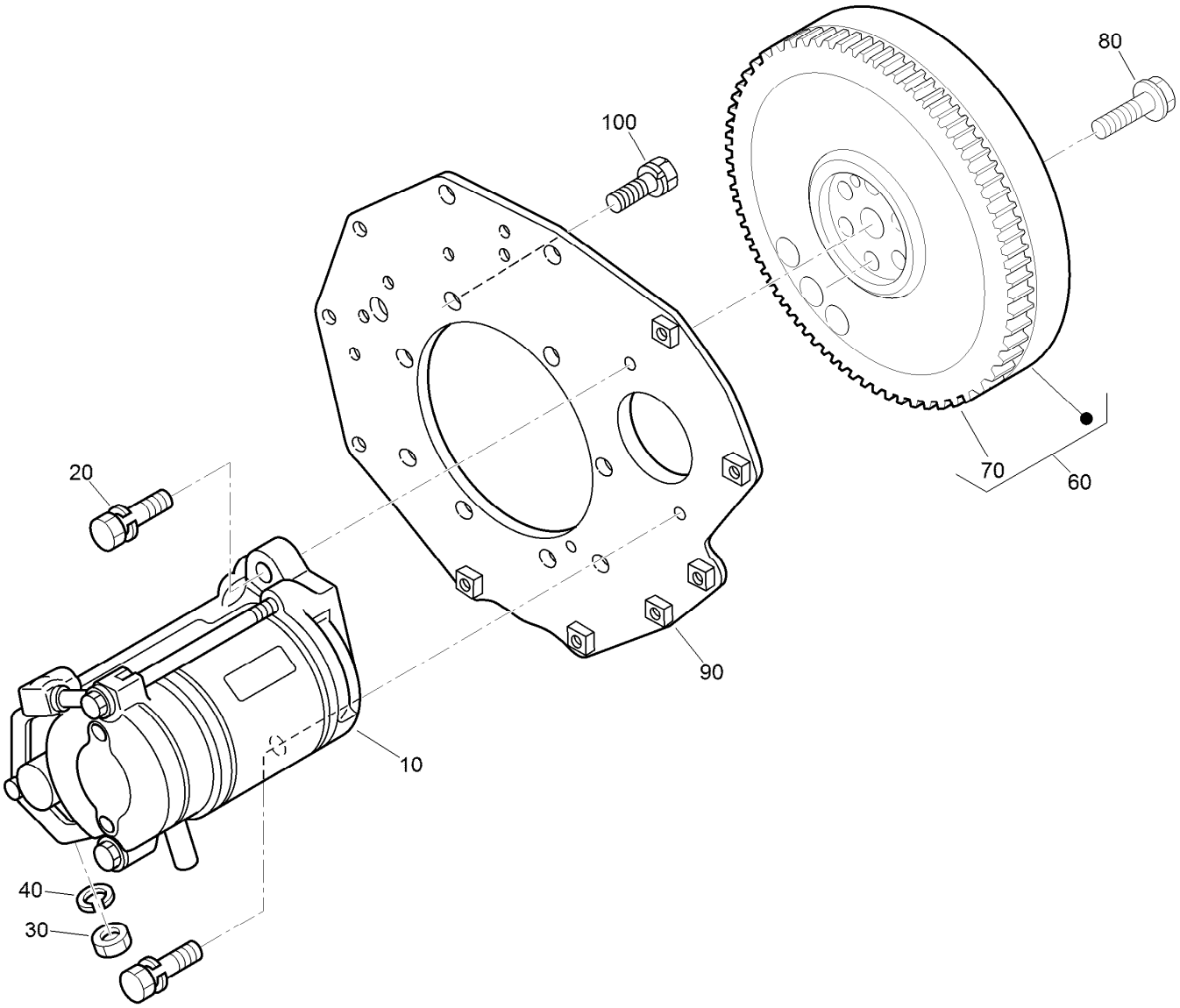


# Starter and Flywheel Assembly

| *Ref.* | *Part Number* | *Qty.* | *Description* |
|---|---|---|---|
| 10 | 98-9705 | 1 | Starter ASM |
| 20 | 98-7697 | 2 | Bolt |
| 30 | 98-7739 | 1 | Nut |
| 40 | 105-2893 | 1 | Washer-Spring |
| 60 | 105-3784 | 1 | Flywheel ASM |
| 70 | 115-3015 | 1 | Gear-Ring |
| 80 | 98-9537 | 6 | Bolt-Flywheel |
| 90 | 98-9486 | 1 | Plate-End, Rear |
| 100 | 98-9392 | 8 | Bolt |

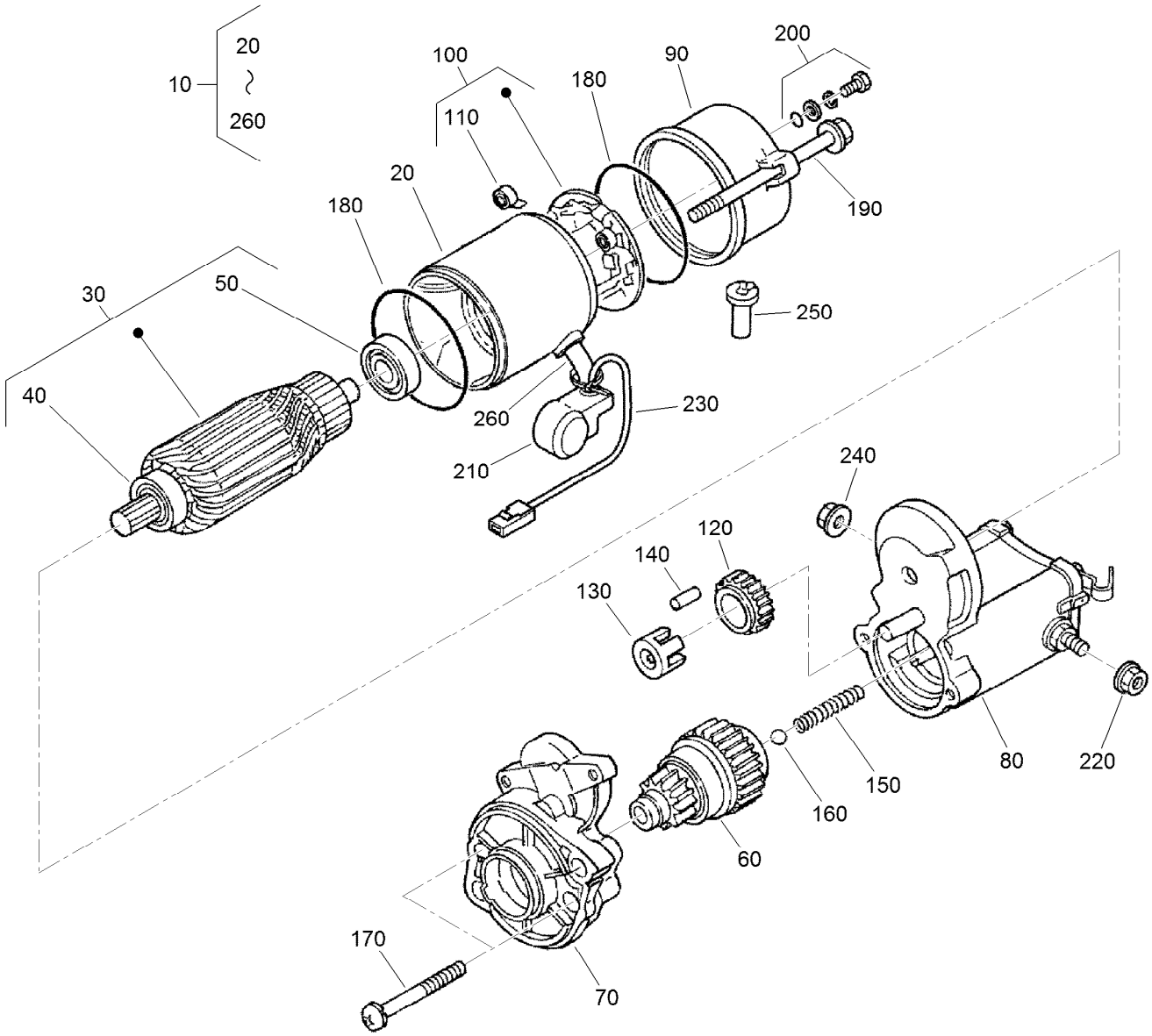


# Starter Component Assembly

| Ref. | Part Number | Qty. | Description |
|---|---|---|---|
| 10 | 98-9705 | 1 | Starter ASM |
| 20 | 104-8608 | 1 | Yoke ASM |
| 30 | 98-7742 | 1 | Armature ASM |
| 40 | 98-7744 | 1 | Bearing |
| 50 | 98-7743 | 1 | Bearing |
| 60 | 99-8373 | 1 | Clutch-Running, Over |
| 70 | 99-8374 | 1 | Frame-End, Drive |
| 80 | 105-3746 | 1 | Magnetic Switch ASM |
| 90 | 98-7748 | 1 | Frame-End |
| 100 | 98-7749 | 1 | Brush Holder ASM |
| 110 | 98-7750 | 4 | Spring-Brush |
| 120 | 98-7751 | 1 | Gear |
| 130 | 98-7752 | 1 | Retainer |

| Ref. | Part Number | Qty. | Description |
|---|---|---|---|
| 140 | 98-7753 | 5 | Roller |
| 150 | 98-7754 | 1 | Spring |
| 160 | 98-7755 | 1 | Ball |
| 170 | 98-7756 | 2 | Bolt |
| 180 | 98-7757 | 2 | O-Ring |
| 190 | 100-9240 | 2 | Bolt |
| 200 | 98-7758 | 2 | Bolt ASM |
| 210 | 99-8375 | 1 | Cover |
| 220 | 99-8371 | 1 | Nut-Hex |
| 230 | 98-9711 | 1 | Cord-Solenoid, Stop |
| 240 | 99-8376 | 1 | Nut-Hex |
| 250 | 98-7759 | 1 | Pipe-Drain |
| 260 | 98-9712 | 1 | Band-Cover |

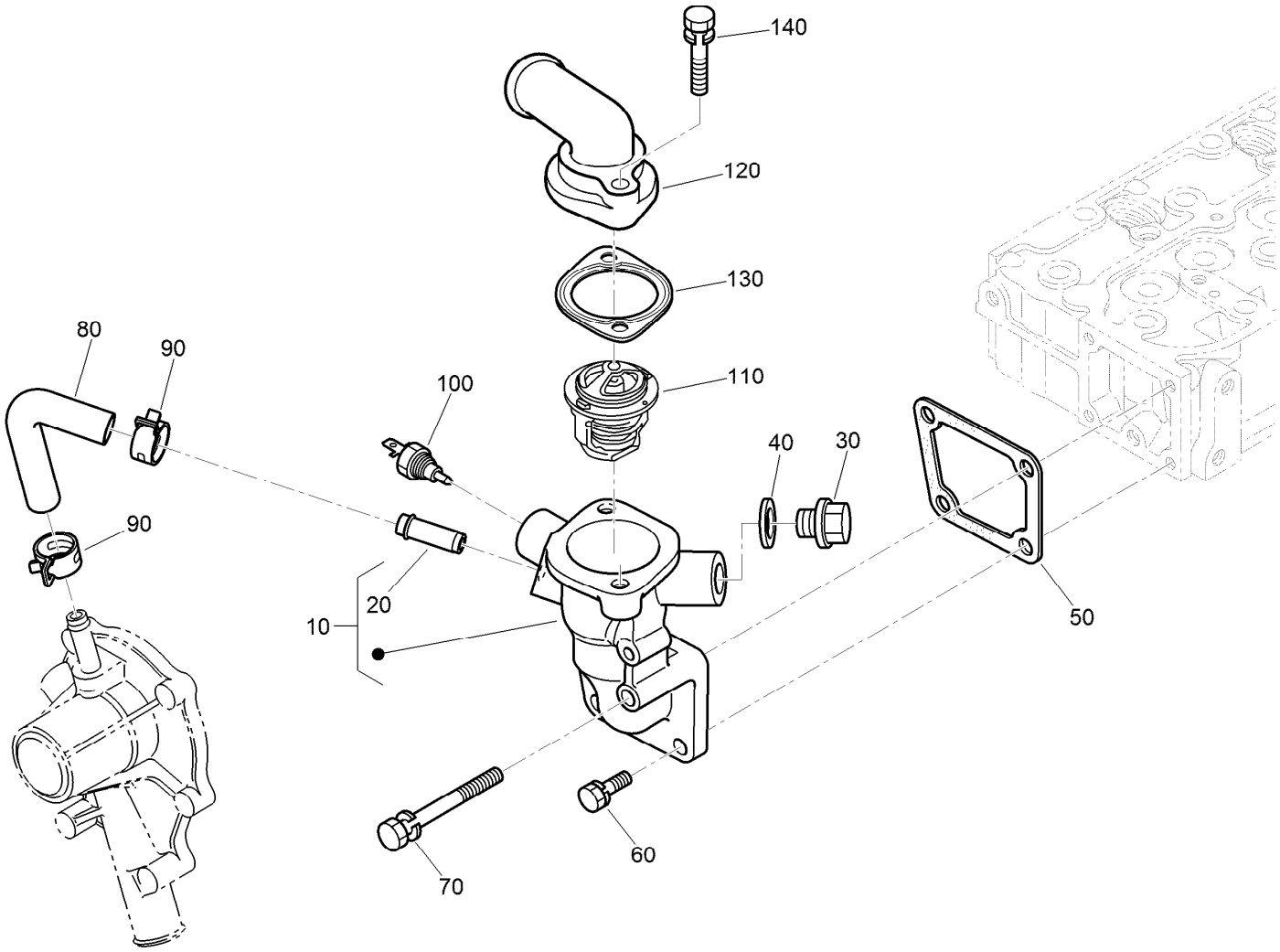


# Water Flange and Thermostat Assembly

| Ref. | Part Number | Qty. | Description |
|---|---|---|---|
| 10 | 98-9713 | 1 | Water Flange ASM |
| 20 | 98-9580 | 1 | Pipe-Return, Water |
| 30 | 100-2203 | 2 | Nut-Flange |
| 30 | 105-3747 | 1 | Plug |
| 40 | 99-3583 | 1 | Gasket |
| 50 | 98-9638 | 1 | Gasket-Flange, Water |
| 60 | 98-7692 | 3 | Bolt |
| 70 | 98-9356 | 1 | Bolt |
| 80 | 98-9578 | 1 | Pipe-Return, Water |
| 90 | 125-9078 | 2 | Clamp-Hose |
| 100 | 98-9719 | 1 | Thermoswitch |
| 110 | 98-7778 | 1 | Thermostat ASM |
| 120 | 104-4804 | 1 | Outlet-Water |
| 130 | 105-3748 | 1 | Gasket-Thermostat |
| 140 | 98-7777 | 2 | Bolt |

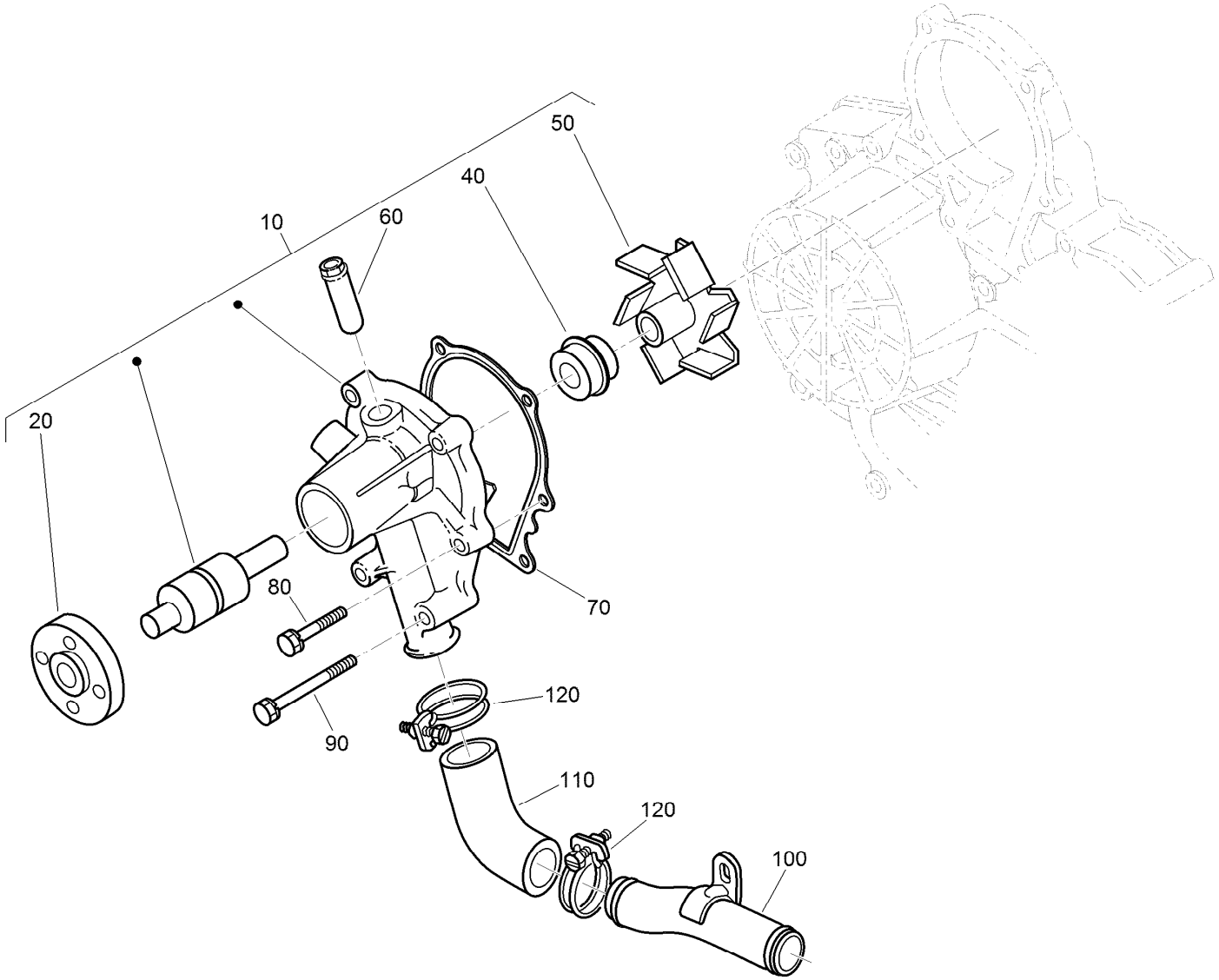


# Water Pump and Water Pipe Assembly

| Ref. | Part Number | Qty. | Description |
|---|---|---|---|
| 10 | 107-9089 | 1 | Water Pump ASM |
| 20 | 99-3516 | 1 | Flange-Pump, Water |
| 40 | 105-3750 | 1 | Mechanical Seal ASM |
| 50 | 112-7017 | 1 | Impeller-Pump, Water |
| 60 | 100-1932 | 1 | Pipe-Return, Water |
| 70 | 99-3454 | 1 | Gasket-Pump, Water |
| 80 | 98-9353 | 4 | Bolt |
| 90 | 107-9090 | 2 | Bolt |
| 100 | 98-9716 | 1 | Pipe-Water |
| 110 | 107-9091 | 1 | Pipe-Water |
| 120 | 127-0439 | 2 | Clamp-Hose |

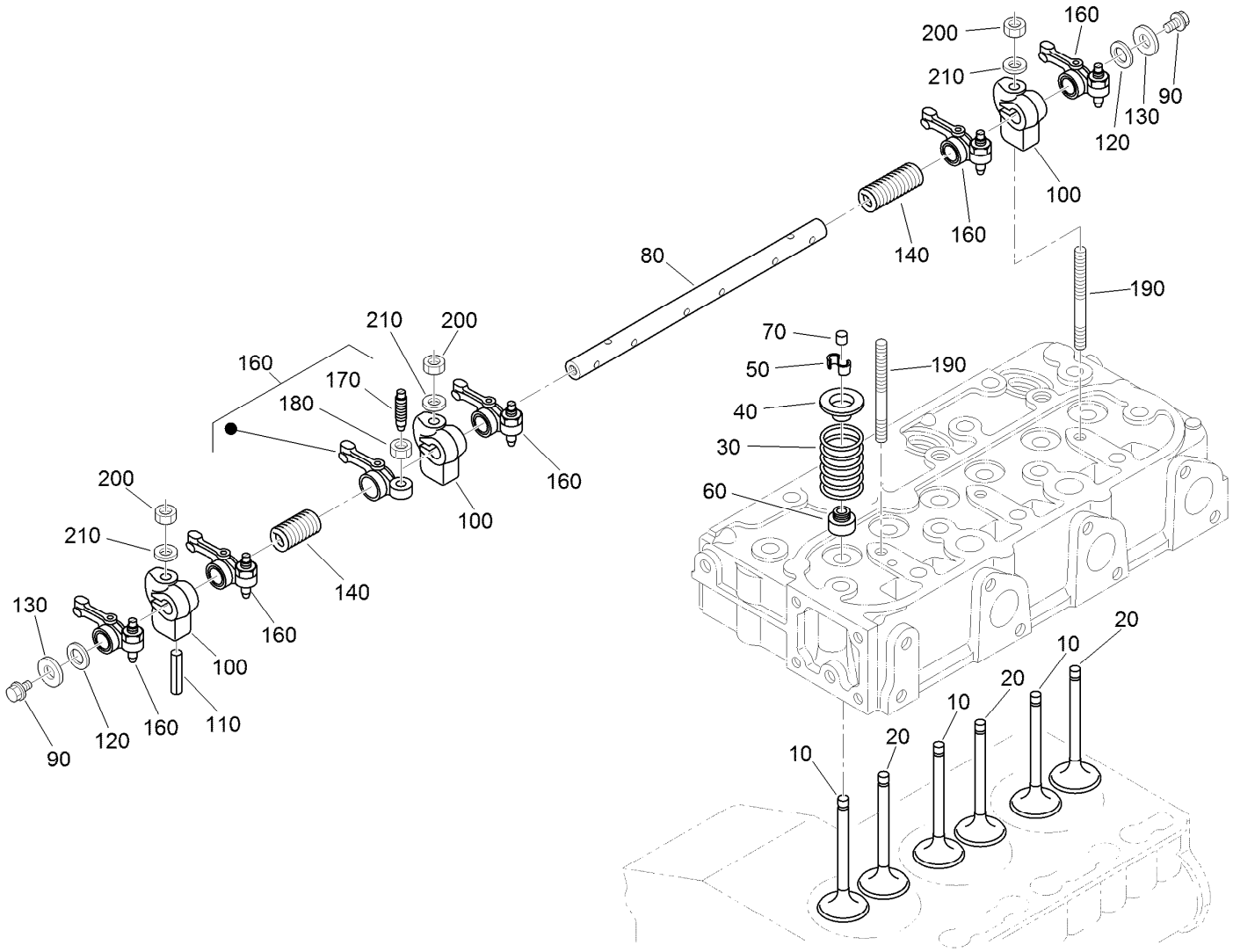


# Valve and Rocker Arm Assembly

| Ref. | Part Number | Qty. | Description |
|---|---|---|---|
| 10 | 112-7018 | 3 | Valve-Inlet |
| 20 | 120-2564 | 3 | Valve-Exhaust |
| 30 | 98-9648 | 6 | Spring-Valve |
| 40 | 107-9092 | 6 | Retainer-Spring |
| 50 | 117-7572 | 6 | Collet-Spring, Valve |
| 60 | 99-8385 | 6 | Seal-Stem, Valve |
| 70 | 98-9497 | 6 | Cap-Valve |
| 80 | 130-1248 | 1 | Shaft-Arm, Rocker |
| 90 | 99-8363 | 2 | Bolt-Flange |
| 100 | 98-9505 | 3 | Bracket-Arm, Rocker |

| Ref. | Part Number | Qty. | Description |
|---|---|---|---|
| 110 | 105-3758 | 1 | Pin-Spring |
| 120 | 98-9507 | 2 | Washer-Shaft, Rocker Arm |
| 130 | 110-3832 | 2 | Washer-Plain |
| 140 | 98-9504 | 2 | Spring-Arm, Rocker |
| 160 | 112-7020 | 6 | Rocker Arm ASM |
| 170 | 98-9502 | 6 | Screw-Adjusting |
| 180 | 98-9503 | 6 | Nut |
| 190 | 98-9506 | 3 | Stud |
| 200 | 98-9393 | 3 | Nut |
| 210 | 98-9385 | 3 | Washer-Flat |

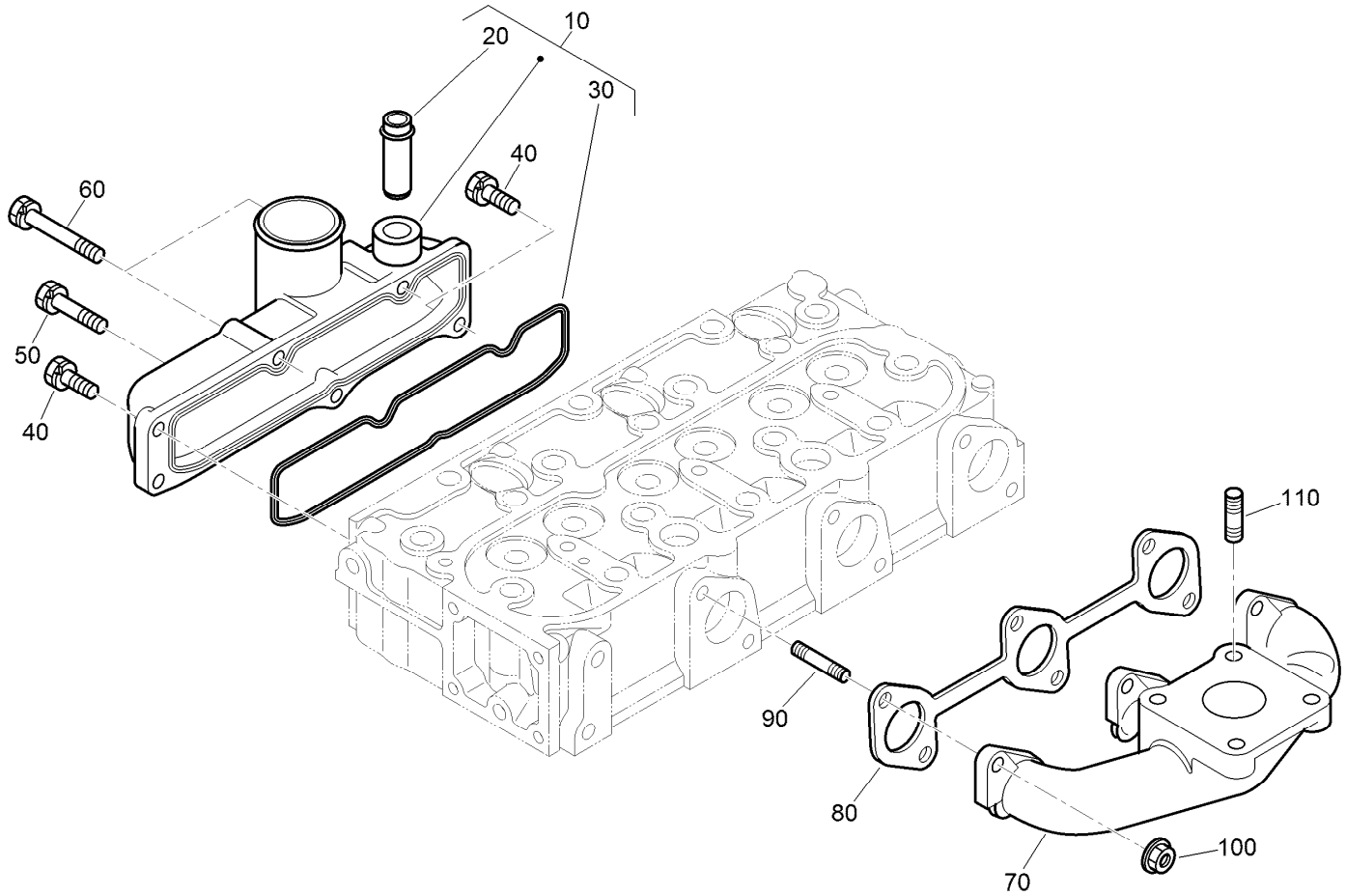


# Inlet and Exhaust Manifold Assembly

| *Ref.* | *Part Number* | *Qty.* | *Description* |
|---|---|---|---|
| 10 | 107-7843 | 1 | Manifold Inlet ASM |
| 20 | 98-9492 | 1 | Joint-Pipe, Breather |
| 30 | 98-9609 | 1 | Gasket-Manifold, Inlet |
| 40 | 127-0403 | 3 | Bolt-Flange |
| 50 | 98-9353 | 1 | Bolt |
| 60 | 125-9063 | 2 | Bolt-Sems |
| 70 | 107-9093 | 1 | Manifold-Exhaust |
| 80 | 99-8327 | 1 | Gasket-Manifold, Exhaust |
| 90 | 98-9588 | 6 | Stud |
| 100 | 98-9665 | 6 | Nut |
| 110 | 98-7769 | 4 | Stud |

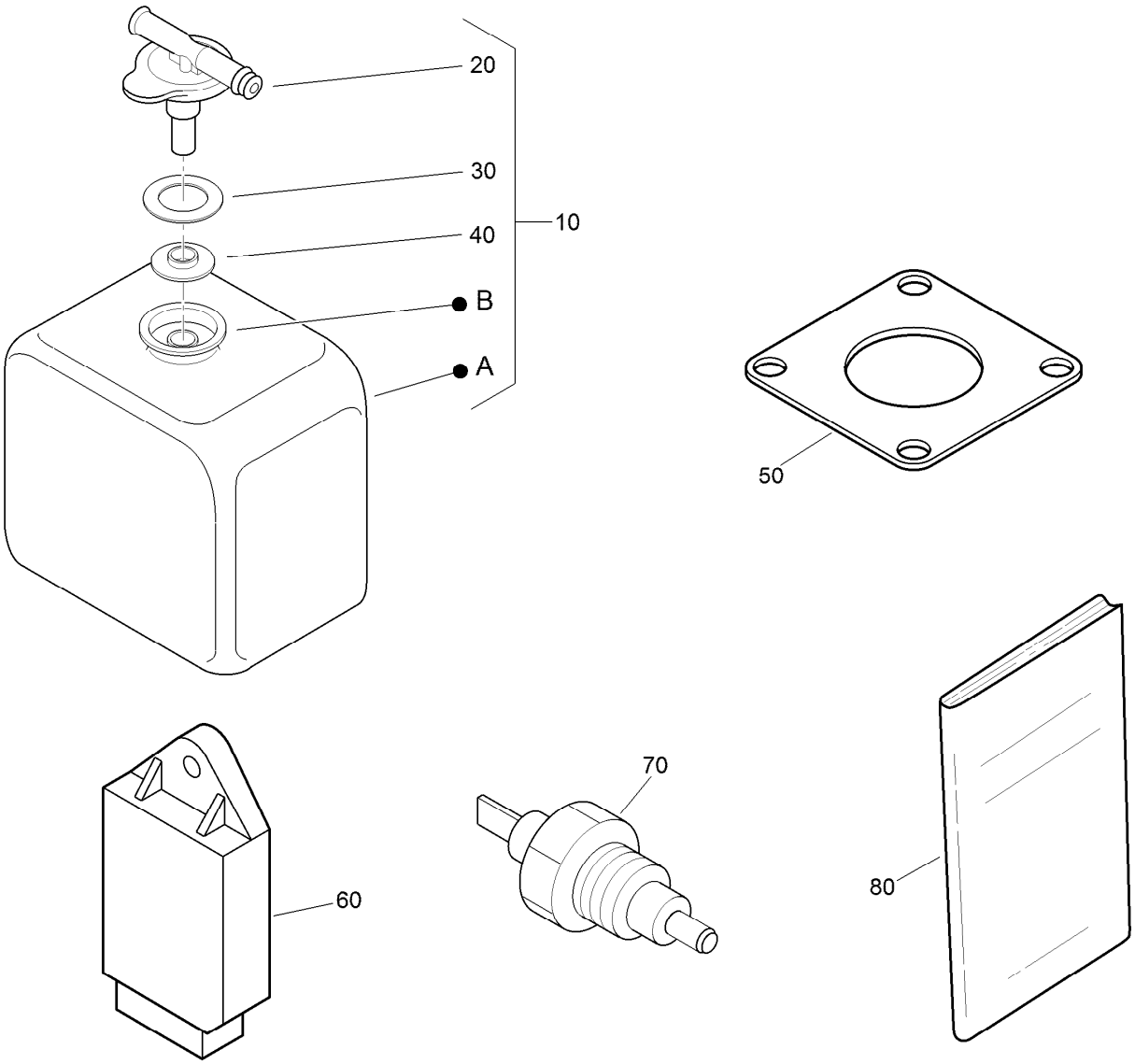


# Miscellaneous Engine Parts

| *Ref.* | *Part Number* | *Qty.* | *Description* |
|---|---|---|---|
| 10 | 104-9318 | 1 | Bottle-Overflow |
| 20 | 115-4132 | 1 | Cap |
| 30 | 105-3755 | 1 | Gasket |
| 40 | 105-3756 | 1 | Plate |
| 50 | 99-8343 | 1 | Gasket-Muffler |
| 60 | 98-7611 | 1 | Controller-Glow |
| 70 | 106-7772 | 1 | Thermoswitch |
| 80 | 130-1543 | 1 | Manual-Operator |

# Attachments and Accessories

## For 30849 Groundsmaster 3505-D Rotary Mower

| Product Name | Model/Part |
|---|---|
| Blade-High Lift | 104-5183 |
| Blade-Angle Sail | 105-9810-03 |
| Blade-Atomic | 107-0235-03 |
| 27in Blade Service Pack (qty 6) | 108-1462 |
| Blade-Combo | 108-9026-03 |
| Sectional Roller Assembly | 117-5121 |
| 400-hour Filter Maintenance MVP Kit | 30058 |
| 400-hour Filter Maintenance MVP Kit | 30090 |
| Premium Seat Kit | 30629 |
| 27in Rotary Cutting Unit | 30834 |
| Leaf Mulching Kit | 30836 |
| Work Light Kit | 30841 |

**Notes:**

**Notes:**

TORO®

Count on it.