Form No. 3429-775 Rev B

TORO®

Count on it.

Parts Catalog

STX-26

Stump Grinder

Model No. 23208—Serial No. 404320000 and Up

Model No. 23208G—Serial No. 404320000 and Up

Register at www.Toro.com.
Original Instructions (EN)

CE

3429-775 B

Ordering Replacement Parts

To order replacement parts, please supply the part number, the quantity, and the description of each part desired.

Understanding Reference Numbers

Each identified part in an illustration has a reference number. The reference number for a part also appears in the parts list, along with other information about the part.

This catalog uses two special reference number formats, one to indicate parts in a service assembly and another to indicate the quantity of a given part in an illustration.

Service Assembly Reference Numbers

Parts in service assemblies have reference numbers in the form a:b. The a represents the reference number of the entire service assembly and the b represents a sequential number unique to each part within the service assembly.

For example, a wheel assembly might be identified by reference number 6, the tire by 6:1, the valve by 6:2, and the wheel by 6:3. When you order the assembly identified by reference number 6, you receive all parts identified by reference numbers 6:1,6:2, and 6:3. However, you may also order any part individually. Reference numbers of this type appear in illustration and in parts lists.

Reference Numbers Indicating Quantity

In an illustration, if a reference number indicates more than one part, the reference number has the form nX y. The n represents the quantity of the part, the X is the multiplication symbol, and the y represents the reference number.

For example, in an illustration, the reference number 2X 37 means that two of the parts identified by reference number 37 are indicated.

Contents

Frame Assembly 4
Track and Drive Assembly 6
Hydraulic Pump Assembly No. 117-6409 8
Hydraulic Pump Assembly No. 117-6410 10
Hydraulic Motor Assembly No. 119-4557 12
Engine Assembly 14
Hydraulic Gear Pump Assembly No. 117-6444 16
Control Assembly 18
Frame and Cutter Wheel Assembly 20
Hydraulic Cylinder Assembly No. 117-6441 22
Hydraulic Cylinder Assembly No. 121-1955 24
Hydraulic Motor Assembly No. 127-9603 26
Tower and Fuel Tank Assembly 28
Control Valve Assembly 30
Control Valve Assembly No. 119-4585 31
Cutter Wheel Valve Assembly No. 119-4586 32
Two-Button Handle Grip Assembly No. 119-4587 33
Oil Cooler Assembly 34
Hydraulic Hose Routing Assembly 36
Battery and Electrical Assembly 38
Cylinder and Crankcase Assembly 40
Piston and Crankshaft Assembly 41
Valve and Camshaft Assembly 42
Lubrication Equipment Assembly 43
Cooling Equipment Assembly 44
Electric Equipment Assembly 45
Carburetor Assembly 46
Control Equipment Assembly 48
Air Filter and Muffler Assembly 49
Fuel Tank and Valve Assembly 50
Starter Assembly 51
Label Set 52
Attachments and Accessories 53

© 2021—The Toro® Company
8111 Lyndale Avenue South
Bloomington, MN 55420

Contact us at www.Toro.com.
Printed in the USA.
All Rights Reserved

Frame Assembly

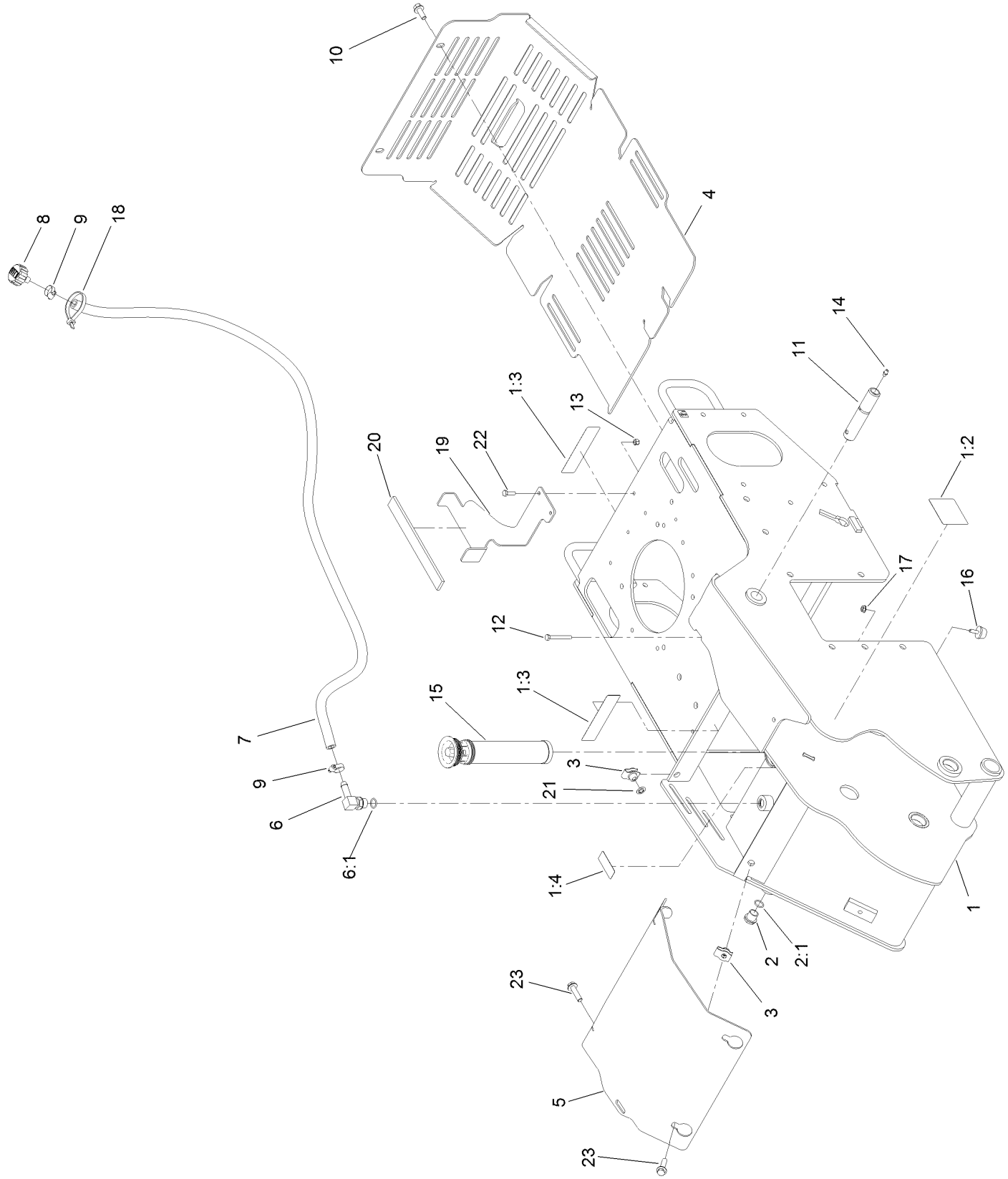

Frame Assembly (continued)

Ref.	Part Number	Qty.	Description
1	127-9602	1	Main Frame ASM
1:2	100-4650	1	Decal-Warning
1:3	93-7814	2	Decal-Danger
1:4	93-6686	1	Decal-Oil, HYD
2	114-3075	1	Sight Glass ASM
2:1	237-79	1	O-Ring
3	105-4886	5	Nut-Tinnerman
4	119-5106-01	1	Cover-Rear
5	119-4566-03	1	Plate-Cover, Front
6	354-120	1	Fitting-Elbow, 90
6:1	237-79	1	O-Ring
7	114-3042	1	Hose-Breather
8	68-6150	1	Breather
9	2412-36	2	Clamp-Hose
10	3234-11	2	Screw-HHF
11	120-7352	1	Pin-Pivot
12	321-18	1	Screw-HH
13	3296-42	3	Nut-Lock, NI
14	302-5	1	Fitting-Grease
15	114-3039	1	Filter-Tank, In
16	1-523420	1	Bumper
17	32128-33	1	Nut-HF
18	3334-945	1	Tie-Cable
19	119-5091-01	1	Bracket-Tank
20	117-6417	1	Pad-Foam
21	107-3154	5	Nut-Push
22	321-8	2	Screw-HH
23	3234-18	3	Screw-HHF

Track and Drive Assembly

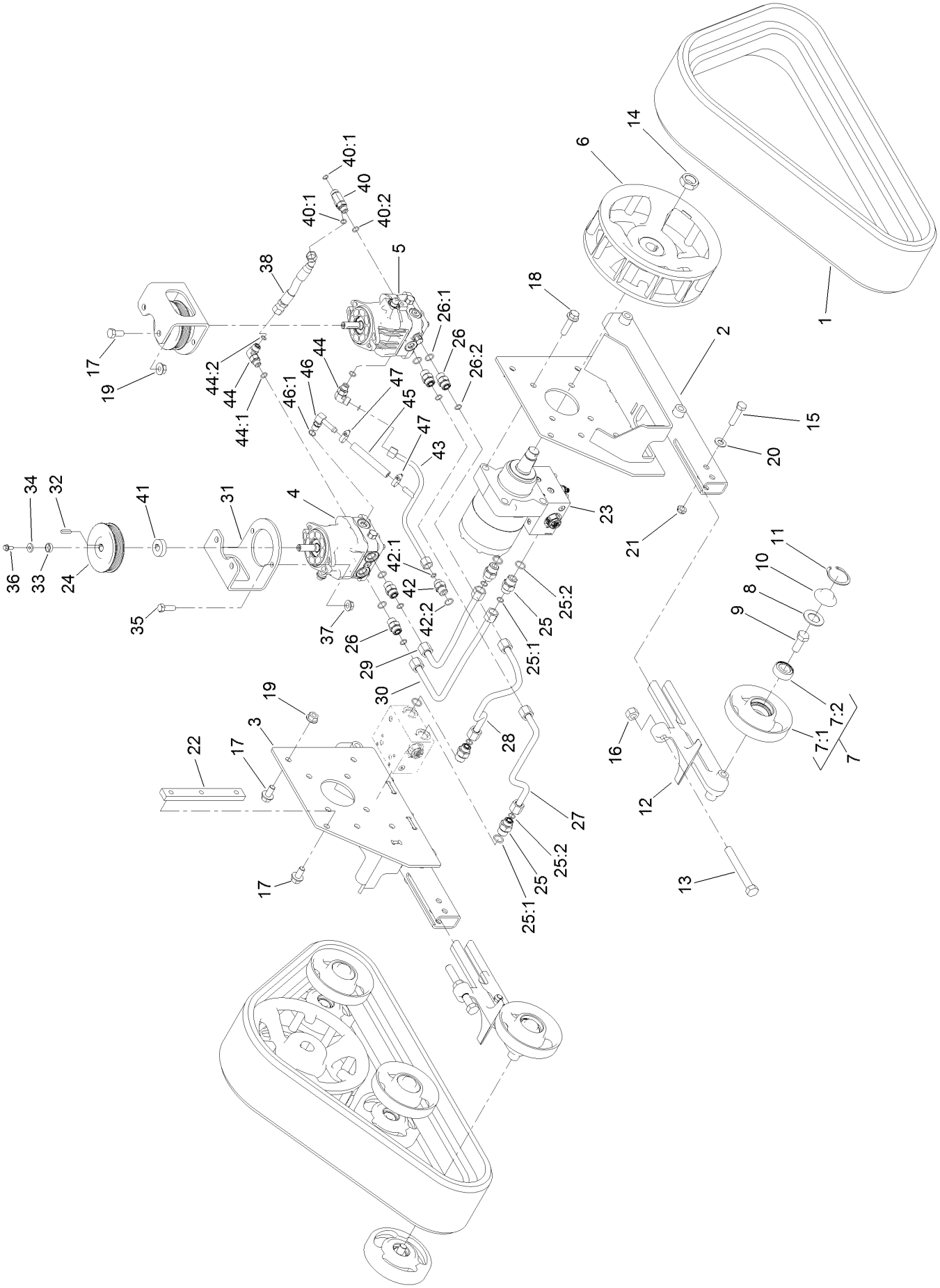

Track and Drive Assembly (continued)

Ref.	Part Number	Qty.	Description
1	112-4816	2	Track-Rubber
2	114-2992-03	1	Frame-Track, LH
3	114-2993-03	1	Frame-Track, RH
4	117-6409	1	RH HYD Pump ASM
5	117-6410	1	LH HYD Pump ASM
6	117-6426-03	2	Wheel-Drive
7	112-4817	12	Wheel-Tensioner
7:1	114-3014-03	1	Wheel-Track
7:2	120-5378	1	Bearing-Ball
8	106-7585	12	Gasket-Bogie
9	327-4	12	Screw-HH
10	106-7557	12	Cap-Wheel, Bearing
11	106-7595	12	Ring-Snap, Internal
12	114-3077-03	2	Tensioner-Track
13	112-4874	2	Screw-HH, TAP
14	106-8159	2	Nut-Lock
15	325-8	4	Screw-HH
16	3217-11	2	Nut-Hex
17	3234-6	14	Screw-HHF
18	3234-27	8	Screw-HHF
19	32128-49	8	Nut-HHF
20	3256-26	4	Washer-Flat
21	3296-45	4	Nut-Hex
22	114-3091	2	Bar-Thread
23	119-4557	2	HYD Motor ASM
24	115-1298	2	Sheave
25	340-6	4	Fitting-Straight
25:1	237-30	1	O-Ring
25:2	237-80	1	O-Ring
26	340-4	4	Fitting-Straight
26:1	237-30	1	O-Ring
26:2	237-79	1	O-Ring
27	119-4581	1	Tube-HYD
28	119-4582	1	Tube-HYD
29	119-4583	1	Tube-HYD
30	119-4584	1	Tube-HYD
31	115-1289-03	2	Bracket-Mount, Pump
32	80-6090	2	Key-Pump
33	108-4211	2	Bushing
34	73-3580	2	Washer
35	324-5	4	Screw-HH
36	33103-016	2	Screw-HHF
37	32128-42	4	Nut-HF
38	115-1297	1	Hose-HYD
40	340-86	1	Fitting-Tee
40:1	237-22	2	O-Ring
40:2	237-42	1	O-Ring
41	115-4002	2	Spacer
42	340-3	1	Fitting-Straight
42:1	237-22	1	O-Ring
42:2	237-79	1	O-Ring
43	117-1305	1	Tube-HYD
44	340-77	2	Fitting-Elbow, 90 DEG
44:1	237-22	1	O-Ring
44:2	237-42	1	O-Ring
45	115-4083	1	Hose
46	100-4887	1	Fitting-Elbow, 90
46:1	237-42	1	O-Ring
47	2412-36	2	Clamp-Hose

Hydraulic Pump Assembly No. 117-6409

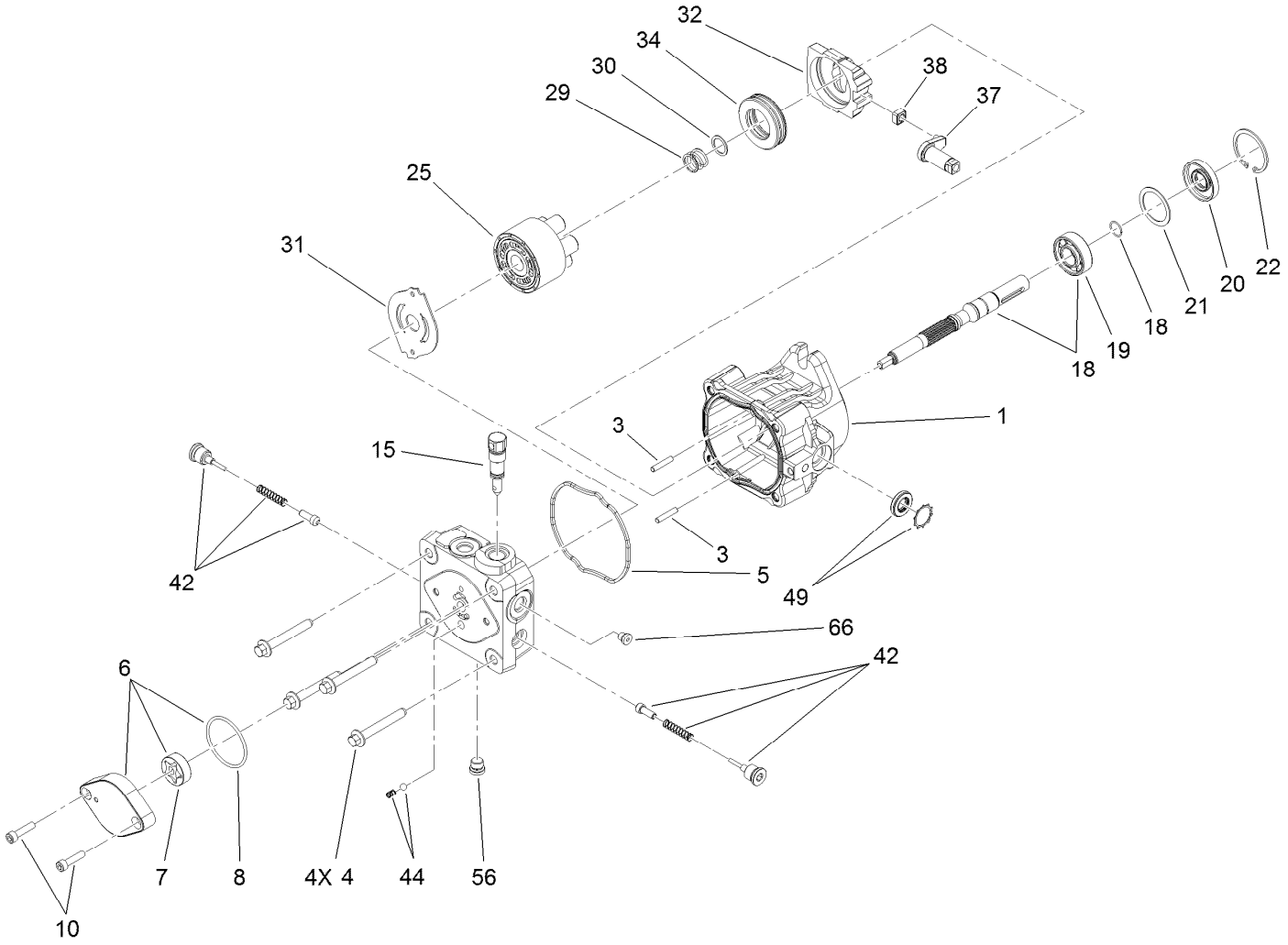

Hydraulic Pump Assembly No. 117-6409 (continued)

Ref.	Part Number	Qty.	Description
1	115-4464	1	Housing Kit
3	106-8753	2	Pin-Headless, Straight
4	106-8754	4	Bolt-HF
5	106-8755	1	O-Ring
6	106-8756	1	Charge Pump Kit
7	104-2122	1	Gerotor ASM
8	106-8757	1	O-Ring
10	104-2111	2	Capscrew
15	106-8759	1	Bypass Valve Kit
18	103-2664	1	Input Shaft Kit
19	104-5311	1	Bearing-Ball
20	104-5310	1	Seal-Lip
21	104-5308	1	Spacer
22	104-5309	1	Ring-Retaining
25	103-2666	1	Cylinder Block Kit

Ref.	Part Number	Qty.	Description
29	94-1936	1	Spring-Block
30	94-1937	1	Washer-Thrust
31	105-6185	1	Plate-Valve
32	94-1907	1	Swashplate-Variable
34	94-6922	1	Bearing-Thrust
37	115-4458	1	Arm-Trunnion, Tapered Square
38	94-1910	1	Guide-Slot
42	98-3252	2	Valve-Check (W/Poppet)
44	106-8760	1	Charge Relief Valve Kit
49	114-8155	1	Trunnion Seal Kit
56	106-8762	1	Plug-HSH
66	106-8763	1	Plug-HSH
99	105-6184	1	Seal Overhaul Kit ●

● Not illustrated

Hydraulic Pump Assembly No. 117-6410

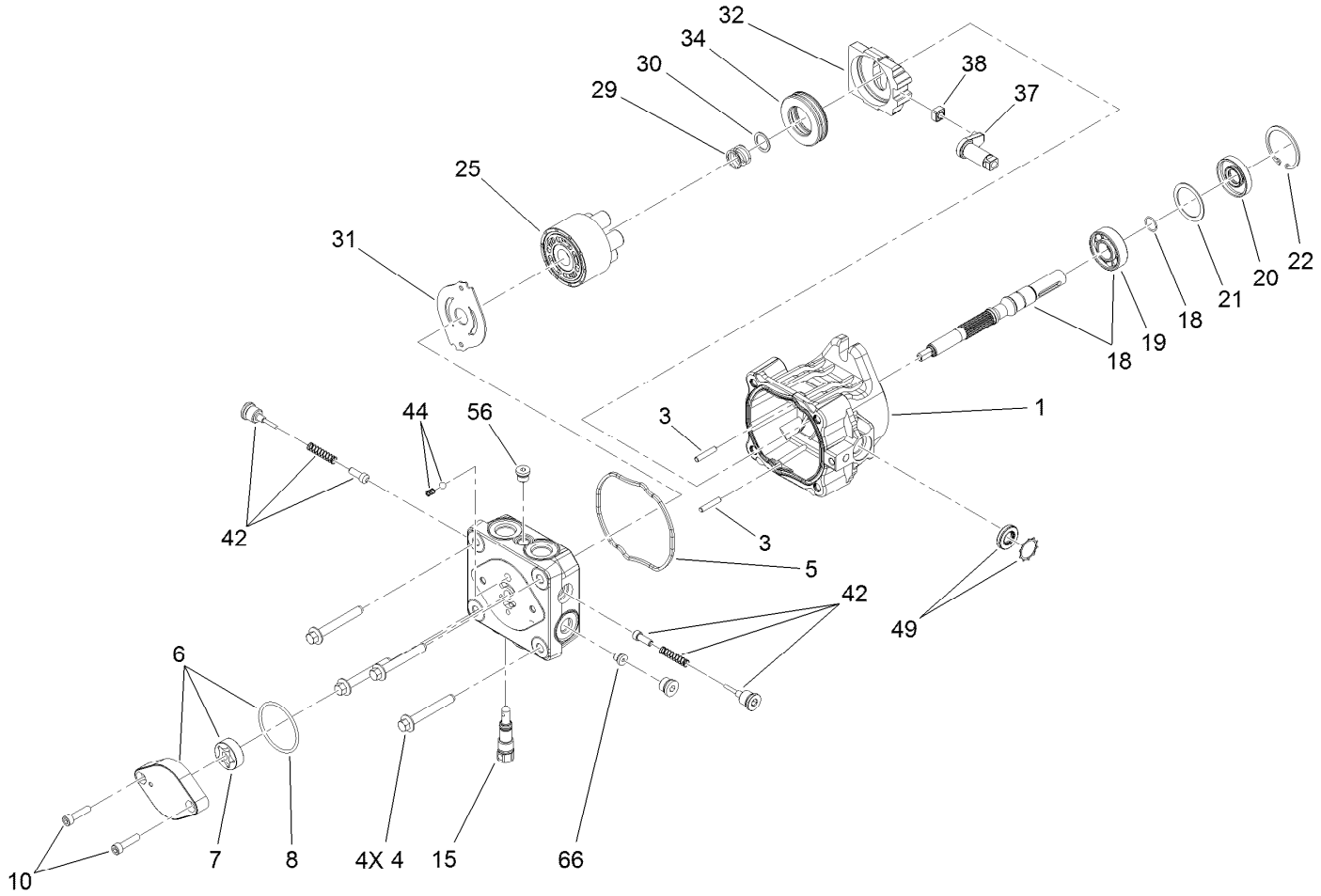

Hydraulic Pump Assembly No. 117-6410 (continued)

Ref.	Part Number	Qty.	Description
1	115-4464	1	Housing Kit
3	106-8753	2	Pin-Headless, Straight
4	106-8754	4	Bolt-HF
5	106-8755	1	O-Ring
6	106-8756	1	Charge Pump Kit
7	104-2122	1	Gerotor ASM
8	106-8757	1	O-Ring
10	104-2111	2	Capscrew
15	106-8759	1	Bypass Valve Kit
18	103-2664	1	Input Shaft Kit
19	104-5311	1	Bearing-Ball
20	104-5310	1	Seal-Lip
21	104-5308	1	Spacer
22	104-5309	1	Ring-Retaining
25	103-2666	1	Cylinder Block Kit

Ref.	Part Number	Qty.	Description
29	94-1936	1	Spring-Block
30	94-1937	1	Washer-Thrust
31	105-6185	1	Plate-Valve
32	94-1907	1	Swashplate-Variable
34	94-6922	1	Bearing-Thrust
37	115-4458	1	Arm-Trunnion, Tapered Square
38	94-1910	1	Guide-Slot
42	98-3252	2	Valve-Check (W/Poppet)
44	106-8760	1	Charge Relief Valve Kit
49	114-8155	1	Trunnion Seal Kit
56	106-8762	1	Plug-HSH
66	106-8763	1	Plug-HSH
99	105-6184	1	Seal Overhaul Kit ●

● Not illustrated

Hydraulic Motor Assembly No. 119-4557

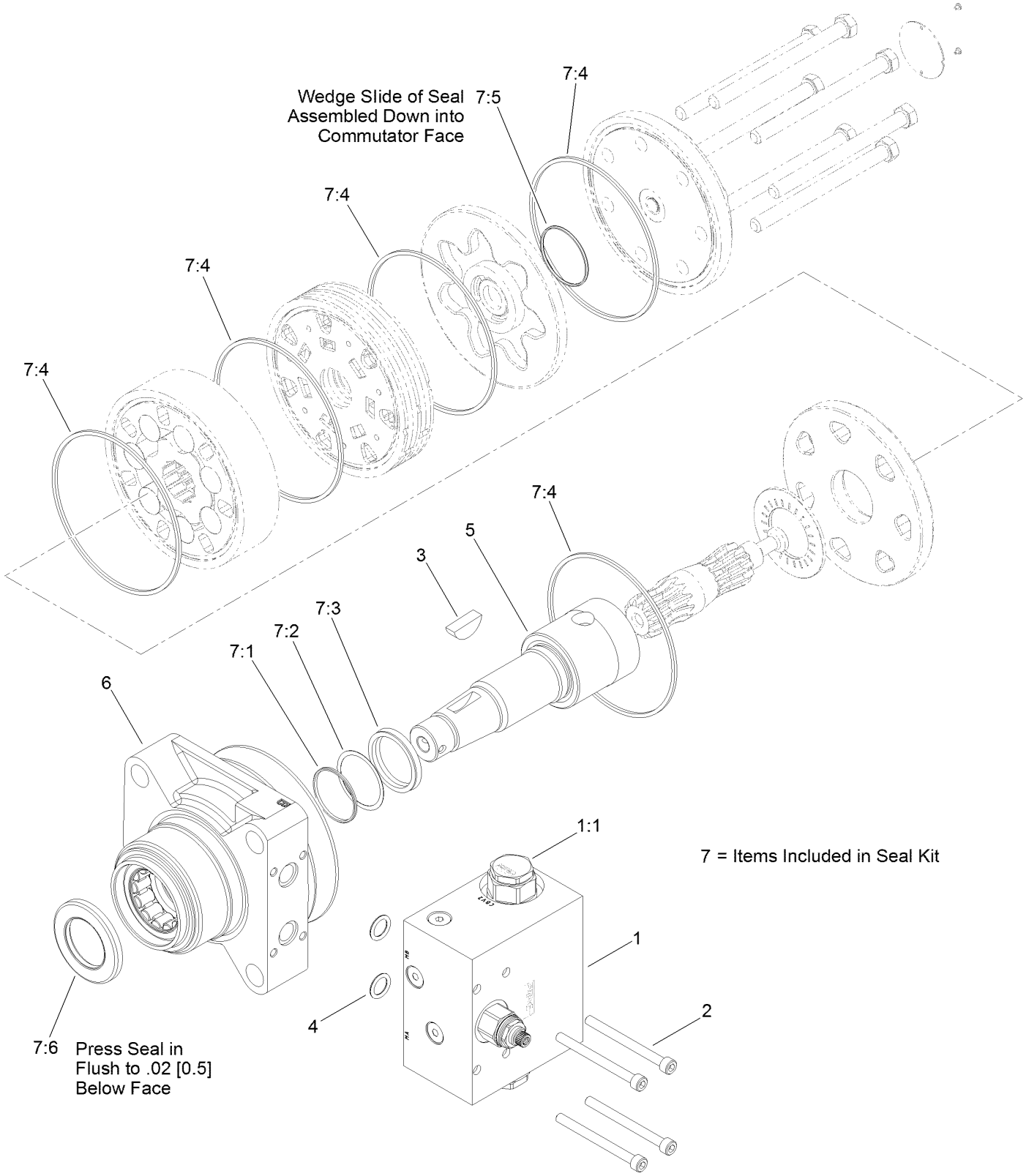

Hydraulic Motor Assembly No. 119-4557 (continued)

Ref.	Part Number	Qty.	Description
1	119-4599	1	Counterbalance Valve ASM
1:1	119-4608	2	Valve-Cartridge
2	119-4611	4	Bolt-HSH
3	3257-42	1	Key-Woodruff
4	120-0691	2	O-Ring
5	76-0860	1	Shaft-Coupling
6	120-5394	1	Motor Housing ASM

Ref.	Part Number	Qty.	Description
7	100-6131	1	Seal Kit ●
7:1		1	Ring-Back Up ■
7:2		1	Washer-Back Up ■
7:3		1	Seal-Shaft ■
7:4		5	Seal-Ring ■
7:5		1	Seal-Commutator ■
7:6		1	Seal-Dirt And Water ■

● Not illustrated

■ Not serviced separately

Engine Assembly

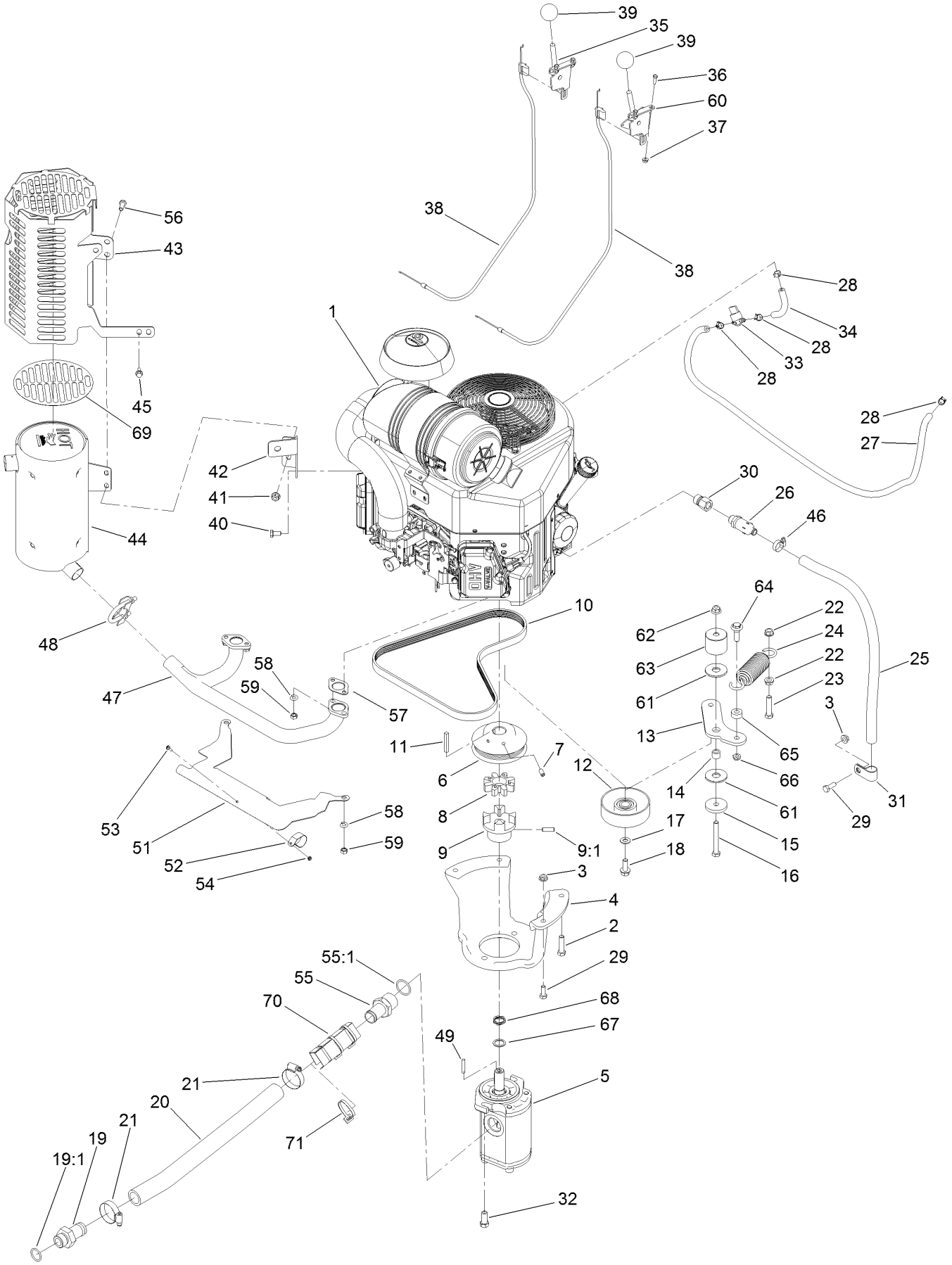

Engine Assembly (continued)

Ref.	Part Number	Qty.	Description
1	117-6305	1	Engine-Kawasaki, Fx730V
2	323-8	4	Screw-HH
3	32128-20	3	Nut-HF
4	115-1480-03	1	Mount-Pump
5	117-6444	1	Gear Pump ASM
6	114-8559-03	1	Pulley-Engine
7	3246-6	2	Screw-Set, HSH
8	93-8827	1	Coupler-Spider
9	114-2933	1	Coupler-Flex
9:1	100-7594	1	Screw-Set
10	114-2991	1	Belt-V
11	608006	1	Key-Square
12	95-8802	1	Pulley-Idler
13	125-0252	1	Arm-Idler
14	1-413088	1	Bushing-Lever, Lift
15	110-9981	1	Washer-Plain
16	323-14	1	Screw-HH
17	3256-24	1	Washer-Flat
18	3234-11	1	Screw-HHF
19	99-3017	1	Fitting
19:1	237-81	1	O-Ring
20	114-2917	1	Hose-Suction
21	2412-111	2	Clamp-Hose, W/Liner
22	3290-357	2	Nut-HHF, Whiz
23	323-9	1	Screw-HH
24	121-4523	1	Spring-Extension
25	99-1356	1	Hose-Vent
26	92-6877	1	Valve-Drain, Oil
27	110-3372	1	Hose-Fuel
28	2412-98	4	Clamp-Hose
29	322-4	3	Screw-HH
30	103-1966	1	Adapter-STR
31	2412-81	1	Clamp-R
32	324-4	2	Screw-HH
33	1-603770	1	Valve-Fuel
34	109-0295	1	Hose-Fuel
35	108-9730	1	Lever-Control
36	3290-134	4	Screw
37	32128-17	4	Nut-Lock, Flange
38	115-1211	2	Cable-Control
39	233-42	2	Knob
40	33114-016	2	Screw-HH
41	112-2844	3	Nut-HF
42	115-9233-03	1	Bracket-Mount, Muffler
43	137-4879-03	1	Guard-Muffler
44	120-7536	1	Muffler
45	33103-016	1	Screw-HHF
46	2412-36	1	Clamp-Hose
47	120-7535	1	Manifold, Muffler
48	2112-11	1	Clamp-Muffler
49	27-8590	1	Key-Square
51	115-9227	1	Plate-Shield, Heat
52	115-6488	1	Clamp
53	115-6494	1	Screw-Pan
54	115-6495	1	Nut-Hex
55	354-78	1	Fitting-STR
55:1	237-146	1	O-Ring
56	33114-020	3	Screw-HH
57	1-653313	2	Gasket-Exhaust
58	115-6496	4	Washer-Spring
59	115-6611	4	Nut-Hex
60	110-5547	1	Lever-Control
61	114-0463	2	Washer-Friction, Composite
62	104-8301	1	Nut-HF, NI
63	125-0251	1	Spacer-Idler
64	614672	1	Screw-Shoulder, HWH
65	104-8426	1	Spacer
66	3296-59	1	Nut-Lock, NI
67	115-7210	1	Washer-Thrust
68	121-4517	1	Washer-Wave
69	131-0604	1	Guard-Foil
70	AU112950	2	Protector-Hose
71	3290-378	3	Tie-Cable

Hydraulic Gear Pump Assembly No. 117-6444

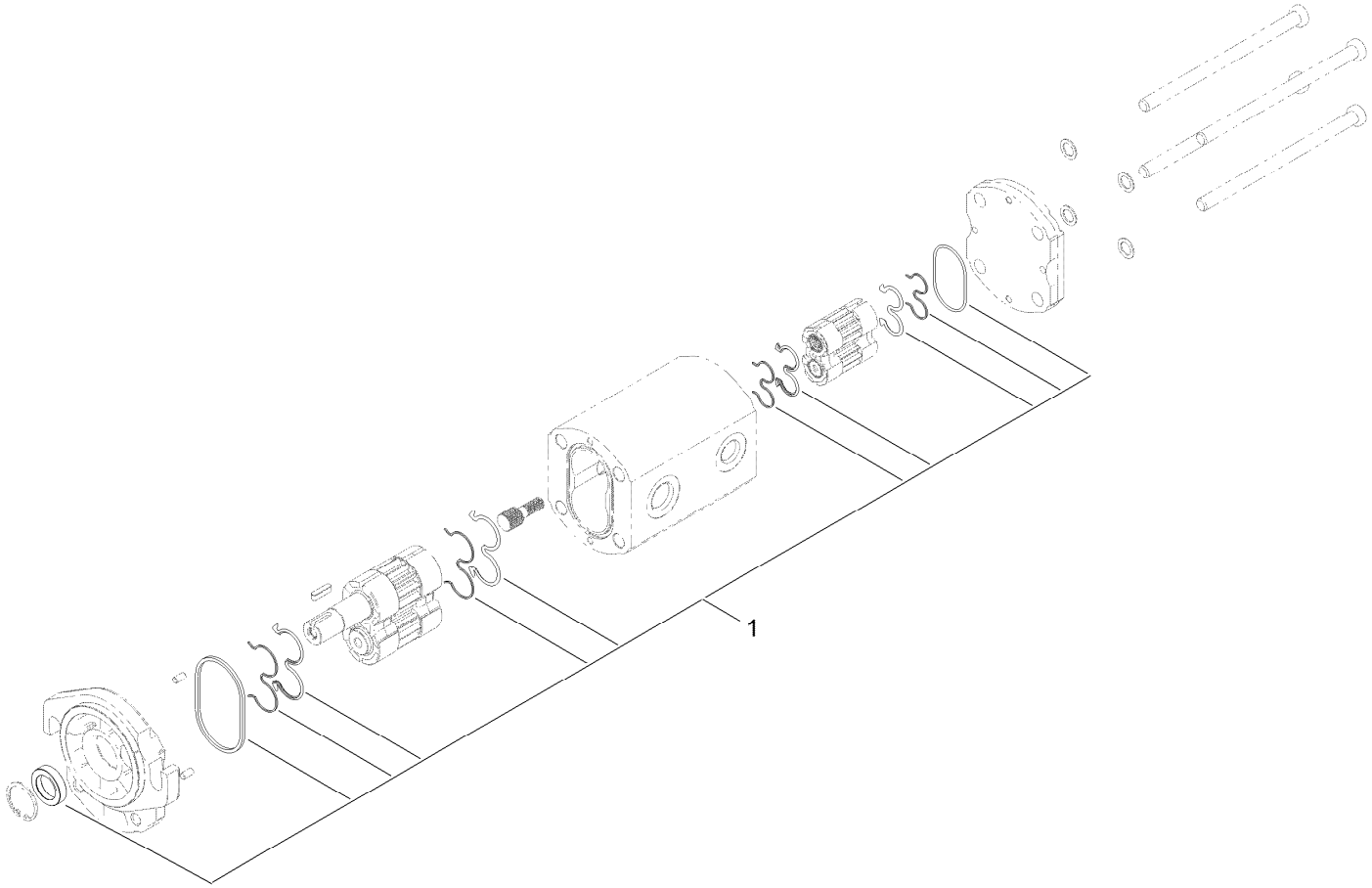

Hydraulic Gear Pump Assembly No. 117-6444 (continued)

Ref.	*Part Number*	*Qty.*	*Description*
1	138-5210	1	Kit-Seal, Pump

Control Assembly

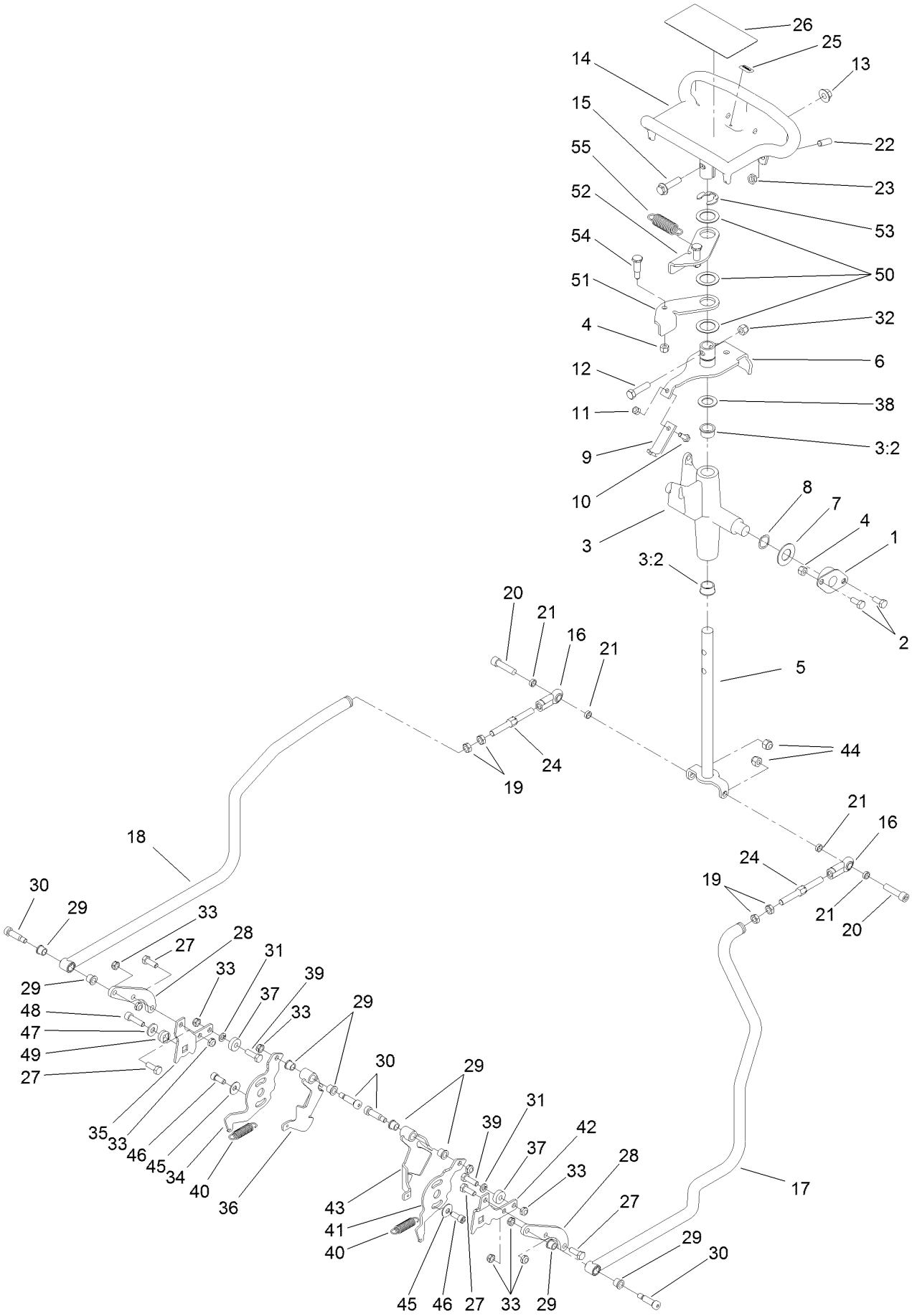

Control Assembly (continued)

Ref.	Part Number	Qty.	Description
1	27-2320	2	Bearing
2	322-3	4	Screw-HH
3	106-5737	1	Control Support ASM
3:2	256-252	2	Bearing-Flange
4	3296-29	6	Nut-Lock, NI
5	117-6335	1	Rod-Drive
6	112-2783	1	Lever-Pivot
7	3256-39	2	Washer-Flat
8	95-3703	2	Washer-Spring, Wave
9	115-1204	1	Plate-Neutral
10	321-4	1	Screw-HH
11	3296-42	1	Nut-Lock, NI
12	323-8	1	Screw-HH
13	32128-43	1	Nut-Flange
14	120-5380-03	1	Handle-Control
15	3234-18	1	Screw-HHF
16	103-1167	2	Joint-Ball End, LH
17	121-4511	1	Rod-Control, LH
18	121-4512	1	Rod-Control, RH
19	3220-3	4	Nut-HJ
20	3274-2	2	Screw-HSH
21	108-0634	4	Spacer-Plate, Retaining
22	3247-6	2	Screw-Set
23	3218-3	2	Nut-Jam
24	121-4506	2	Link-Control, Adjustment
25	98-1459	1	Decal
26	115-4020	1	Decal-Traction
27	322-4	4	Screw-HH
28	115-1290	2	Plate-Adapter, Control, RH
29	256-116	8	Bushing-Flange
30	114-8629	4	Bolt-Shoulder
31	3253-4	2	Washer-Lock
32	3296-39	1	Nut-Lock, NI
33	3296-47	10	Nut-Lock,NI
34	115-6535	1	Plate-Base, RH
35	115-6536	1	Plate-Arm, Return
36	115-6636	1	Pivot-RH
37	251-259	2	Bearing-Ball
38	257-8	1	Washer-Thrust
39	322-5	2	Screw-HH
40	121-4409	2	Spring-Extension
41	115-6549	1	Plate-Base, LH
42	115-6628	1	Plate-Arm, Return, LH
43	115-6637	1	Pivot-LH
44	3296-39	2	Nut-Lock, NI
45	3290-456	2	Washer-Belleville
46	3273-14	2	Screw-HSH
47	3256-3	2	Washer-Flat
48	94-3559	2	Screw-HSH
49	117-6429	2	Lock-Trunion
50	108-9743	3	Washer-Plain
51	98-8407	1	Lever-Return, RH
52	98-8408	1	Lever-Return, LH
53	32151-91	1	Ring-Retaining
54	63-2650	2	Screw-Shoulder
55	108-4724	1	Spring-Extension

Frame and Cutter Wheel Assembly

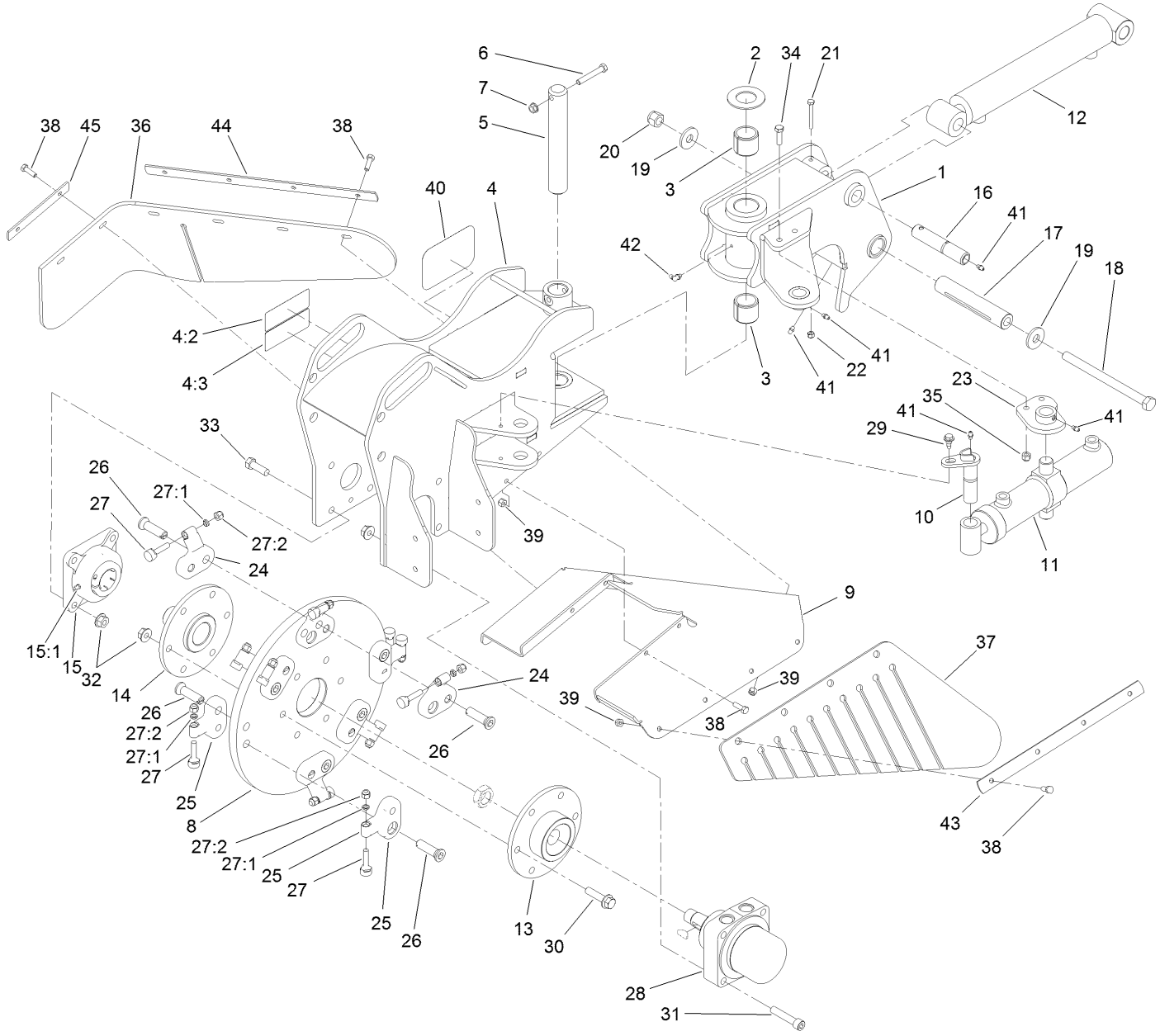

Frame and Cutter Wheel Assembly (continued)

Ref.	Part Number	Qty.	Description
1	117-6390-01	1	Pivot
2	99-2707	1	Washer
3	99-2713	2	Bushing-Tension
4	119-4612	1	Frame ASM
4:2	107-9366	1	Decal-Warning
4:3	93-7321	1	Decal-Danger
5	117-6445	1	Pin-Pivot
6	323-47	1	Screw-HH
7	3290-357	1	Nut-HHF, Whiz
8	119-5050-03	1	Wheel-Cutter
9	119-5064-03	1	Guard-Chip
10	94-9797	1	Pin-Pivot
11	117-6441	1	HYD Cylinder ASM
12	121-1955	1	HYD Cylinder ASM
13	119-4570-03	1	Hub-Drive
14	115-9395-03	1	Shaft-Stub
15	104-2026	1	Bearing
15:1	302-2	1	Fitting-Grease
16	120-7352	1	Pin-Pivot
17	121-4571	1	Spacer-Pivot
18	117-6327	1	Bolt-HH
19	104-9216	2	Washer-Hardened
20	3296-53	1	Nut-Lock, NI
21	321-18	1	Screw-HH
22	3296-42	1	Nut-Lock, NI

Ref.	Part Number	Qty.	Description
23	115-9392-01	1	Mount-Cylinder
24	115-9384	8	Pocket-Angled
25	115-9388	4	Pocket-Straight
26	115-9386	12	Bolt-HSH, RH
27	115-9385	12	Grinder Tooth ASM
27:1	3296-39	1	Nut-Lock, NI
27:2	121-4365	1	Spacer-Tooth
28	127-9603	1	HYD Motor ASM
29	99-5105	1	Screw-Shoulder
30	3234-27	6	Screw-HHF
31	3274-71	4	Screw-HSH
32	32128-49	14	Nut-HHF
33	325-6	4	Screw-HH
34	323-7	2	Screw-HH
35	3296-39	2	Nut-Lock, NI
36	119-5060	1	Shield-Rubber, RH
37	119-5061	1	Shield-Rubber, LH
38	322-5	14	Screw-HH
39	3296-29	14	Nut-Lock, NI
40	104-3989	1	Decal
41	302-5	5	Fitting-Grease
42	302-40	1	Fitting-Grease, 90 DEG
43	119-5118-03	1	Strap-Retainer, LH
44	119-5119-03	1	Strap-Retainer, Rear
45	119-5120-03	1	Strap-Retainer, RH

Hydraulic Cylinder Assembly No. 117-6441

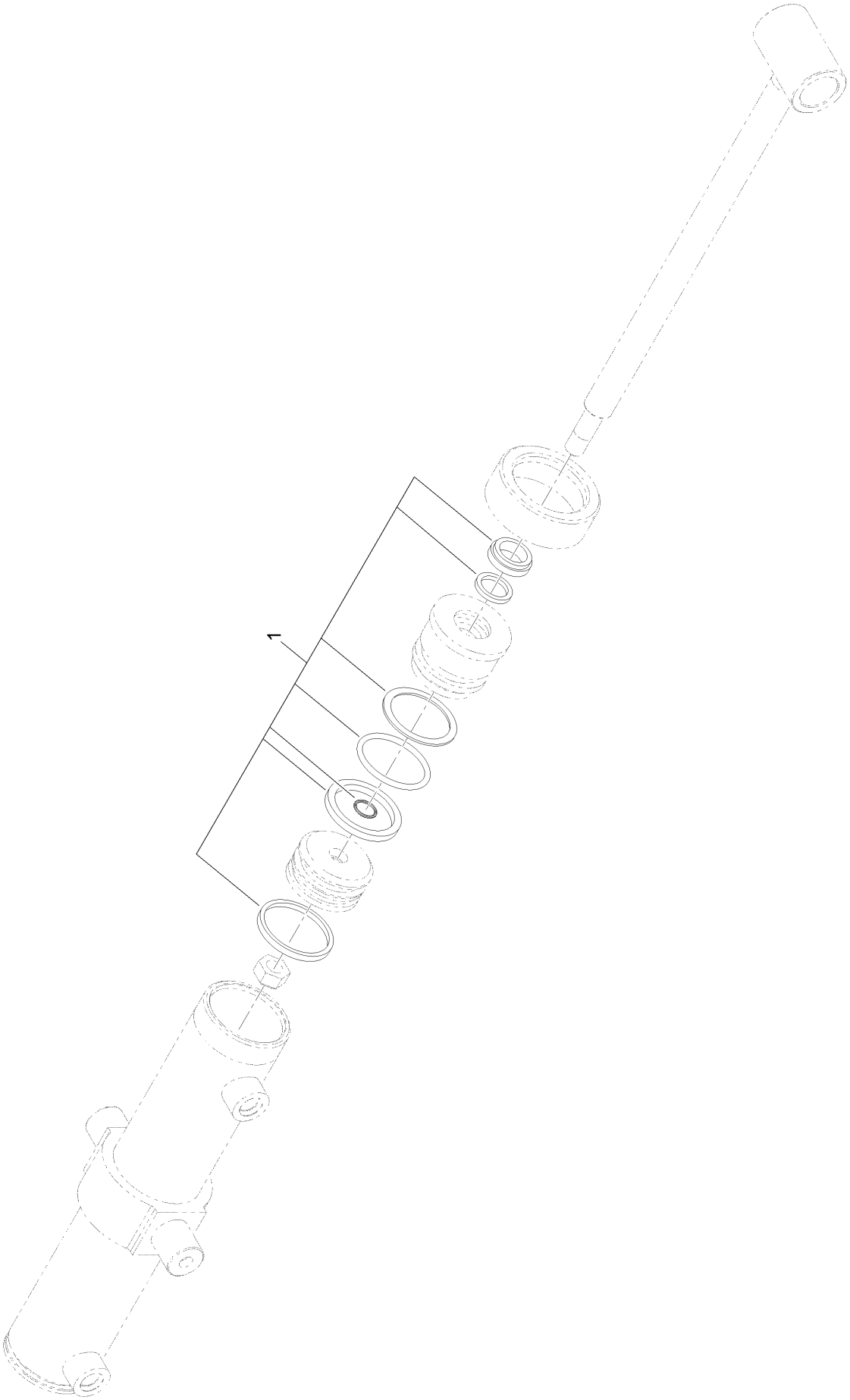

Hydraulic Cylinder Assembly No. 117-6441 (continued)

Ref.	Part Number	Qty.	Description
1	119-4632	1	Seal Kit

Hydraulic Cylinder Assembly No. 121-1955

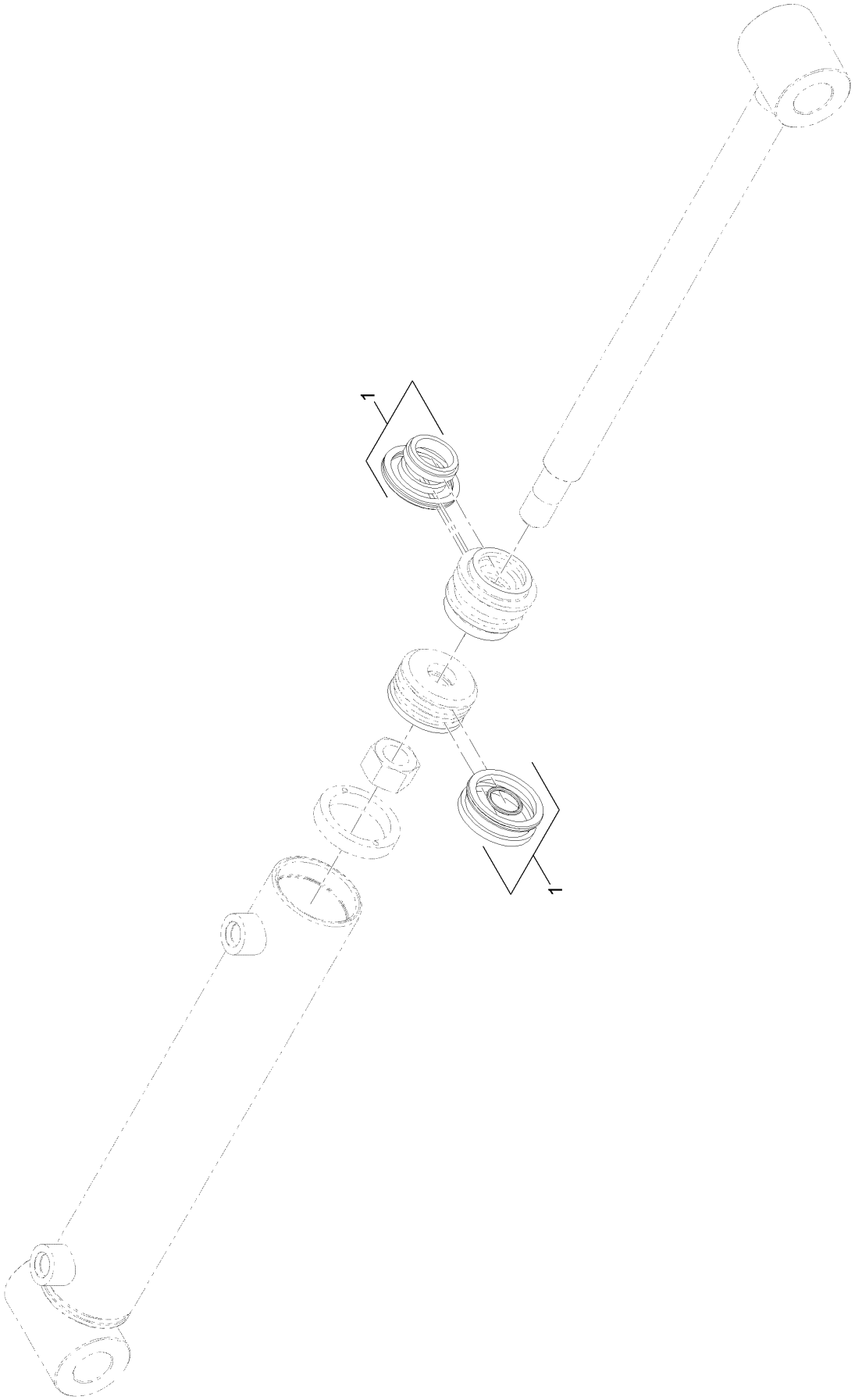

Hydraulic Cylinder Assembly No. 121-1955 (continued)

Ref.	Part Number	Qty.	Description
1	131-0665	1	Seal Kit

Hydraulic Motor Assembly No. 127-9603

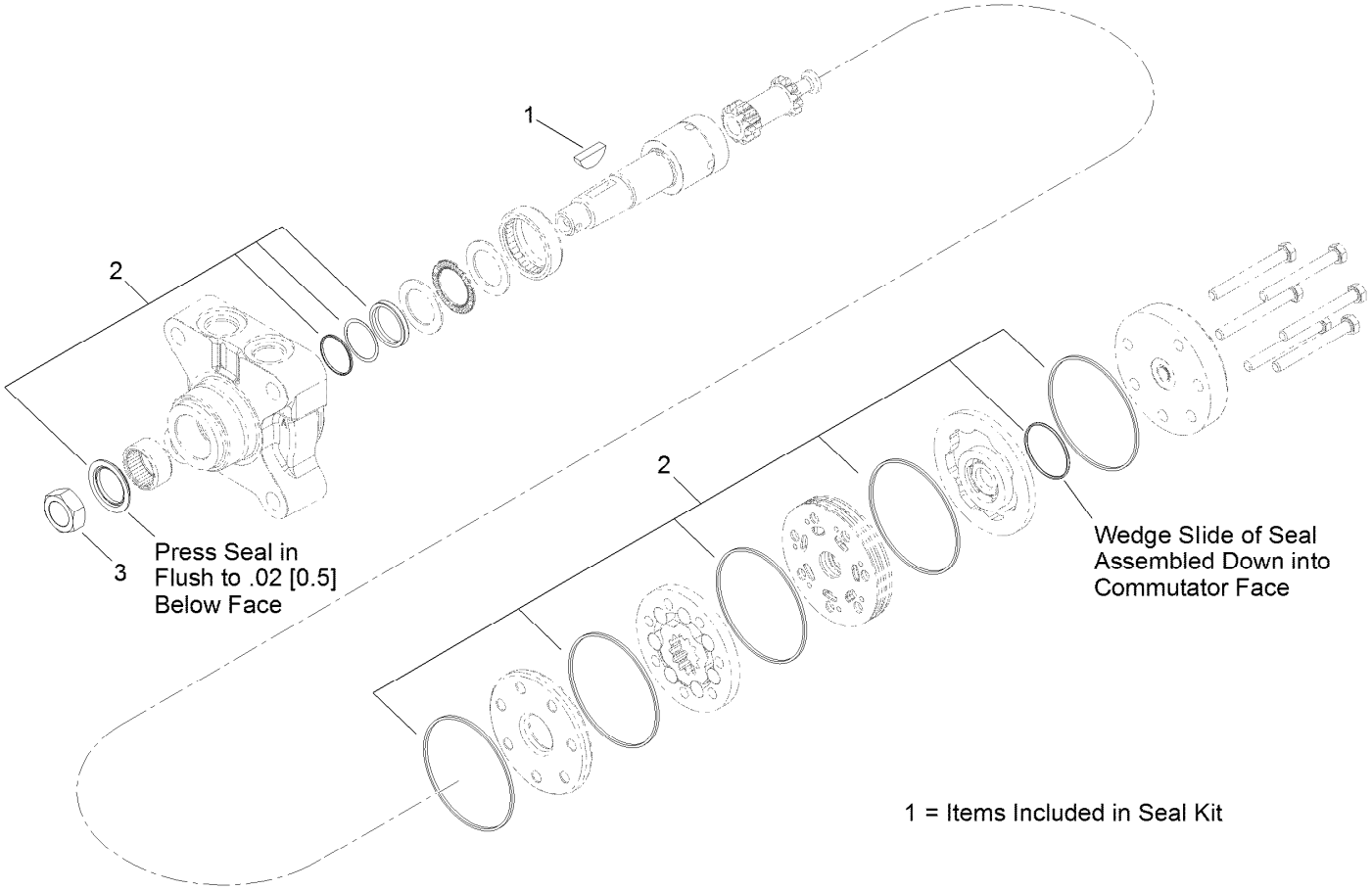

Hydraulic Motor Assembly No. 127-9603 (continued)

Ref.	Part Number	Qty.	Description
1	3257-42	1	Key-Woodruff
2	119-4631	1	Seal Kit
3	106-8159	1	Nut-Lock

Tower and Fuel Tank Assembly

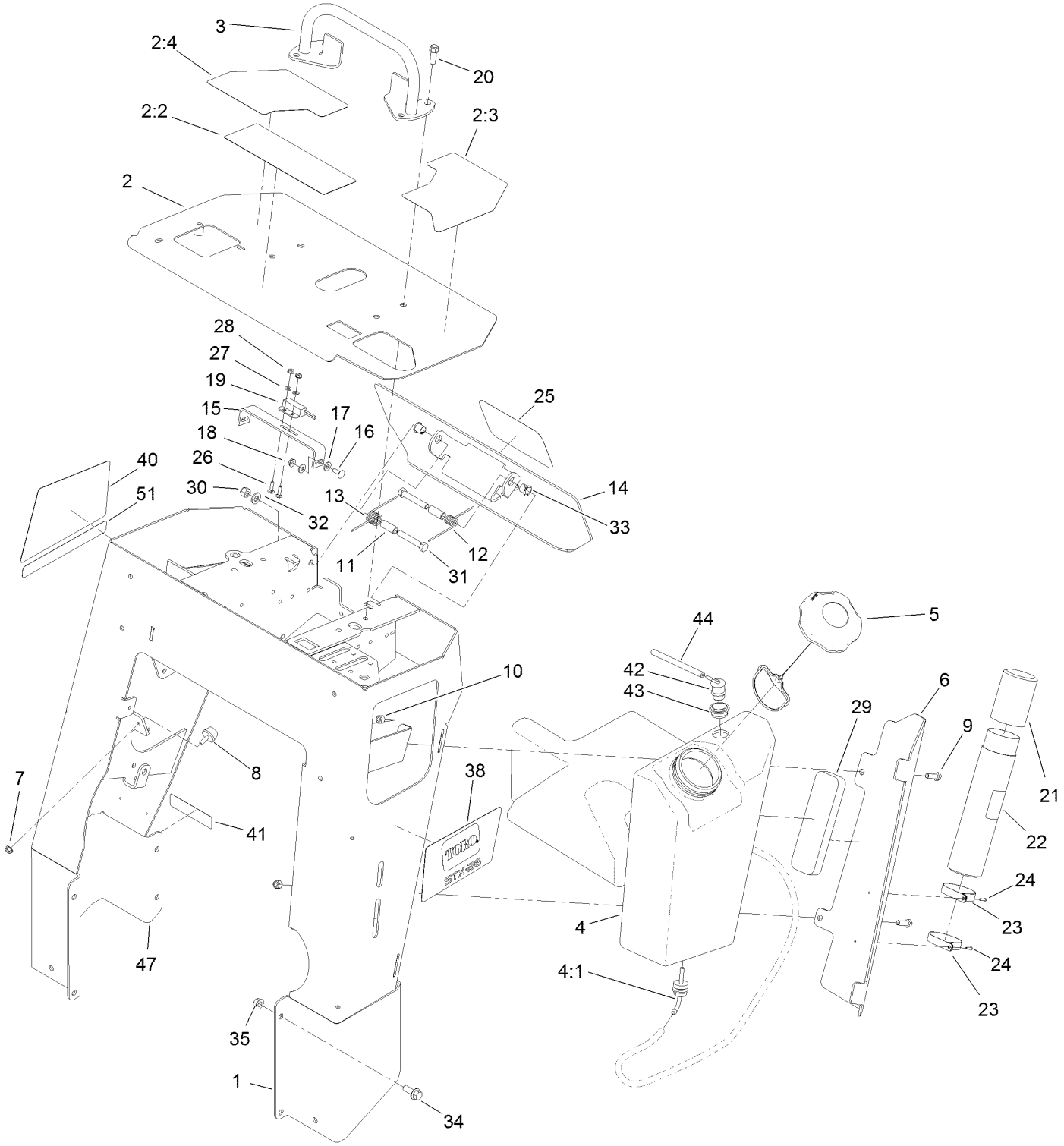

Tower and Fuel Tank Assembly (continued)

Ref.	Part Number	Qty.	Description
1	119-5100-01	1	Tower
2	119-4613	1	Control Panel ASM
2:2	119-4606	1	Decal-Warning
2:3	119-4560	1	Decal-Console, LH
2:4	119-4561	1	Decal-Console, RH
3	106-7715	1	Bar-Reference
4	120-7359	1	Tank-Fuel
4:1	103-2605	1	Fitting-Fuel, Bulkhead
5	137-4119	1	Cap-Fuel, Ratcheting
6	119-5086-01	1	Bracket-Cover, Tank
7	32128-33	1	Nut-HF
8	1-523420	1	Bumper
9	322-5	2	Screw-HH
10	3296-29	2	Nut-Lock, NI
11	114-1337	2	Spacer-Spring
12	98-8425	1	Spring-Torsion, LH
13	98-8424	1	Spring-Torsion, RH
14	112-2786-03	1	Plate-Reverse
15	100-1263	1	Plate-Switch
16	3229-1	2	Screw-CARR
17	3256-22	4	Washer-Flat
18	32149-2	2	Nut-Keps
19	100-1270	1	Switch-Proximity
20	95-1726	4	Screw-Taptite

Ref.	Part Number	Qty.	Description
21	104-7048	1	Cap-Housing
22	104-7050	1	Tube-Manual
23	2412-120	2	Clamp-R
24	3269-17	2	Rivet-Pop
25	105-1217	1	Decal
26	3229-20	2	Screw-CARR
27	3256-51	2	Washer-Flat
28	32149-7	2	Nut-Keps
29	107-7507	1	Pad-Foam
30	3296-39	2	Nut-Lock, NI
31	323-11	2	Screw-HH
32	3256-24	2	Washer-Flat
33	256-257	2	Bushing-Nyliner
34	3234-11	8	Screw-HHF
35	32128-40	8	Nut-Flange
38	119-4563	1	Decal-Side, LH
40	119-4565	1	Decal-Side, RH
41	133-8062	1	Decal-Arrestor, Spark
42	119-3547	1	Valve-Vent, Fuel
43	114-0284	1	Grommet
44	117-6395	1	Hose-Vent, Tank
47	93-9084	2	Decal-Point, Lift
51	130-7577	1	Decal-Intellisweep

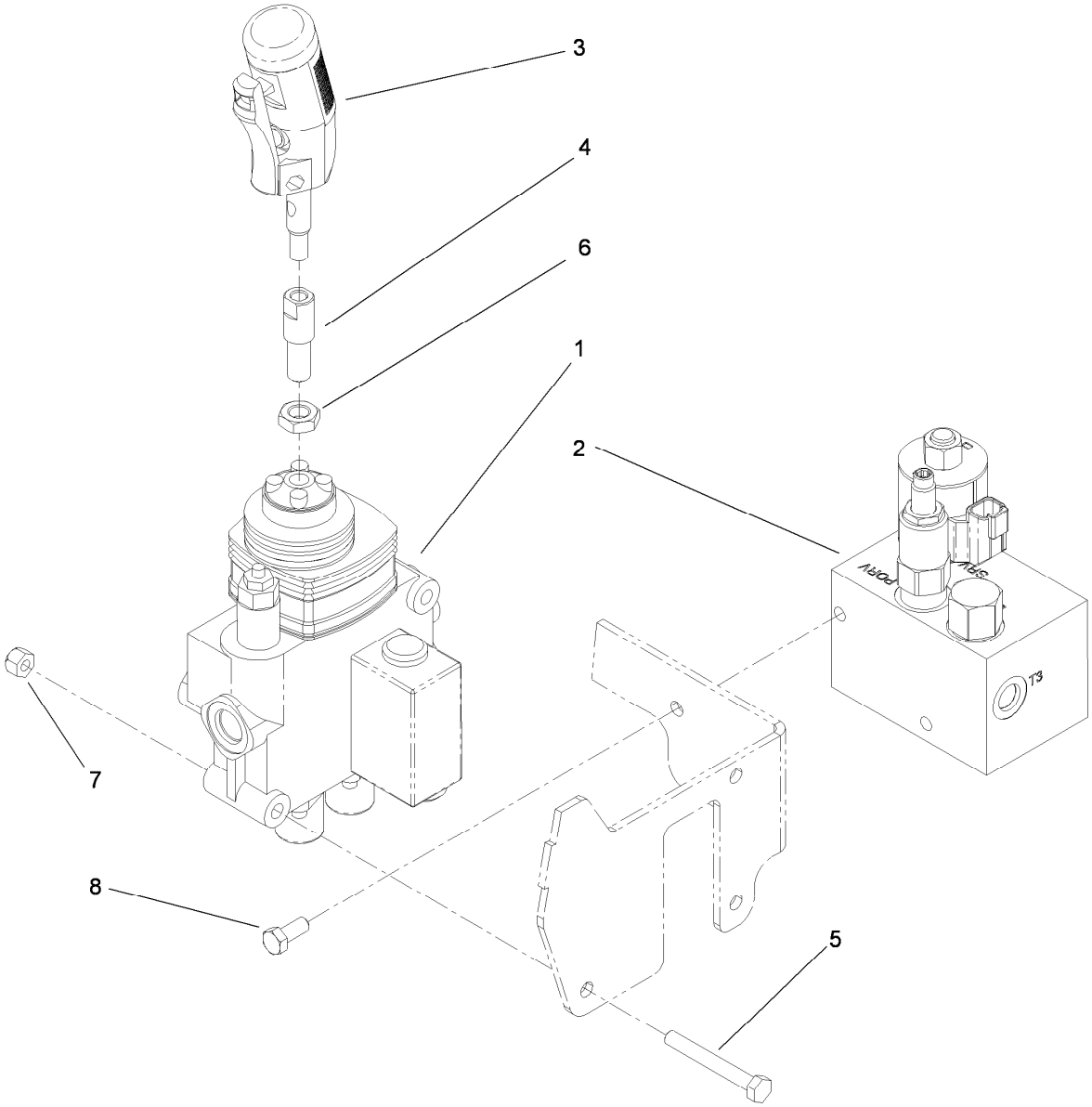

Control Valve Assembly

Ref.	Part Number	Qty.	Description
1	119-4585	1	HYD Valve ASM
2	119-4586	1	Cutter Wheel Valve ASM
3	119-4587	1	Two Button Handle Grip ASM
4	119-5103	1	Adapter-Handle
5	322-12	3	Screw-HH
6	51-2070	1	Nut
7	3296-29	3	Nut-Lock, NI
8	322-3	2	Screw-HH

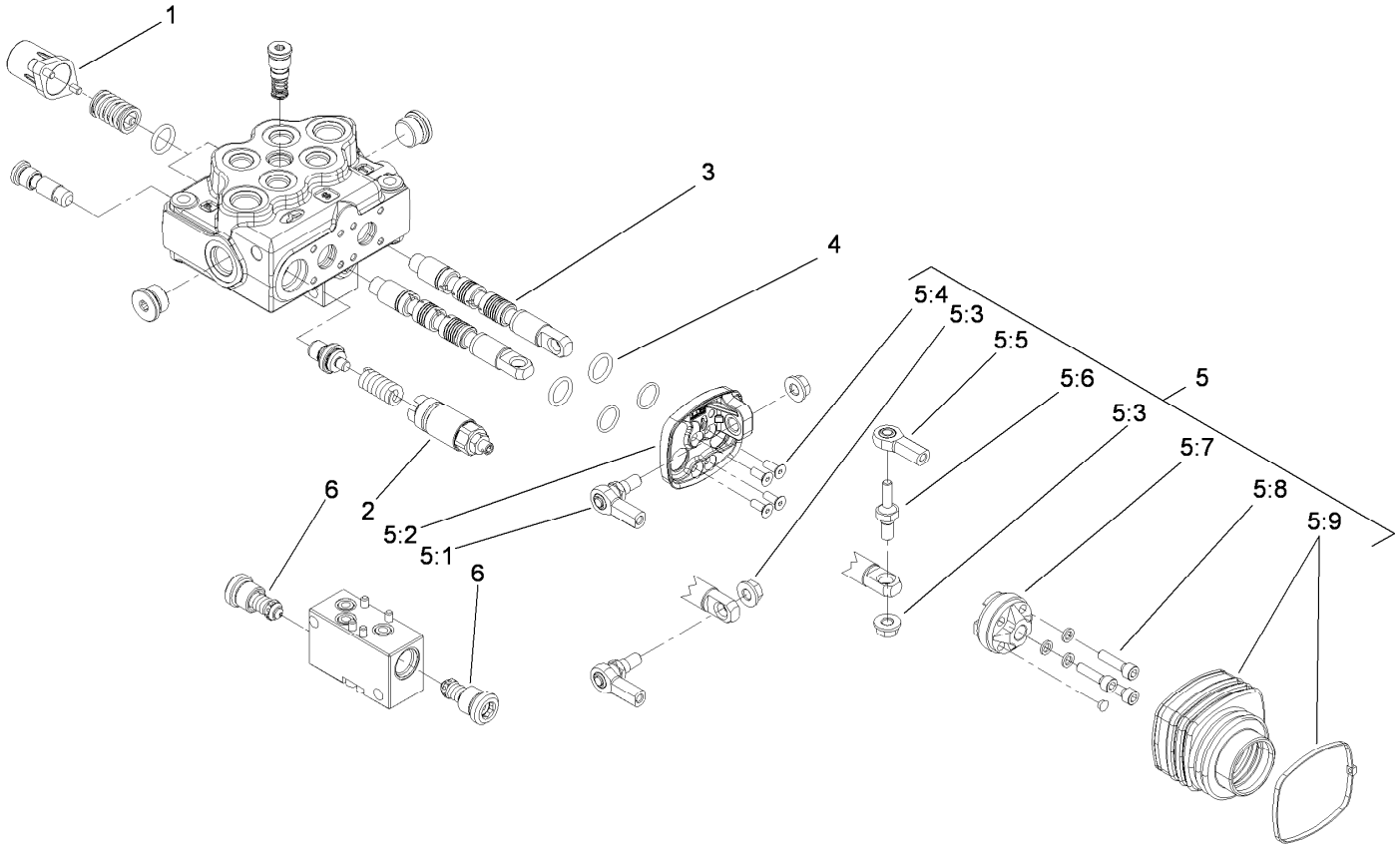

Control Valve Assembly No. 119-4585

Ref.	*Part Number*	*Qty.*	*Description*
1	100-8801	2	High Force Spring Kit
2	100-8805	1	Valve-Relief
3	114-8625	2	Valve-Spool
4	106-7719	4	Seal-Valve
5	119-4622	1	Joystick Kit
5:1	119-4623	2	Joint-Joystick
5:2	119-4624	1	Base-Joystick
5:3	117-1350	3	Nut-HF, Lock
5:4	119-4625	4	Screw-Joystick
5:5	119-4626	1	Joint-Joystick
5:6	119-4627	1	Pin-Spool
5:7	119-4628	1	Holder-Joystick
5:8	3273-42	3	Screw-HSH
5:9	119-4629	1	Boot-Joystick
6	119-4630	2	Valve Kit

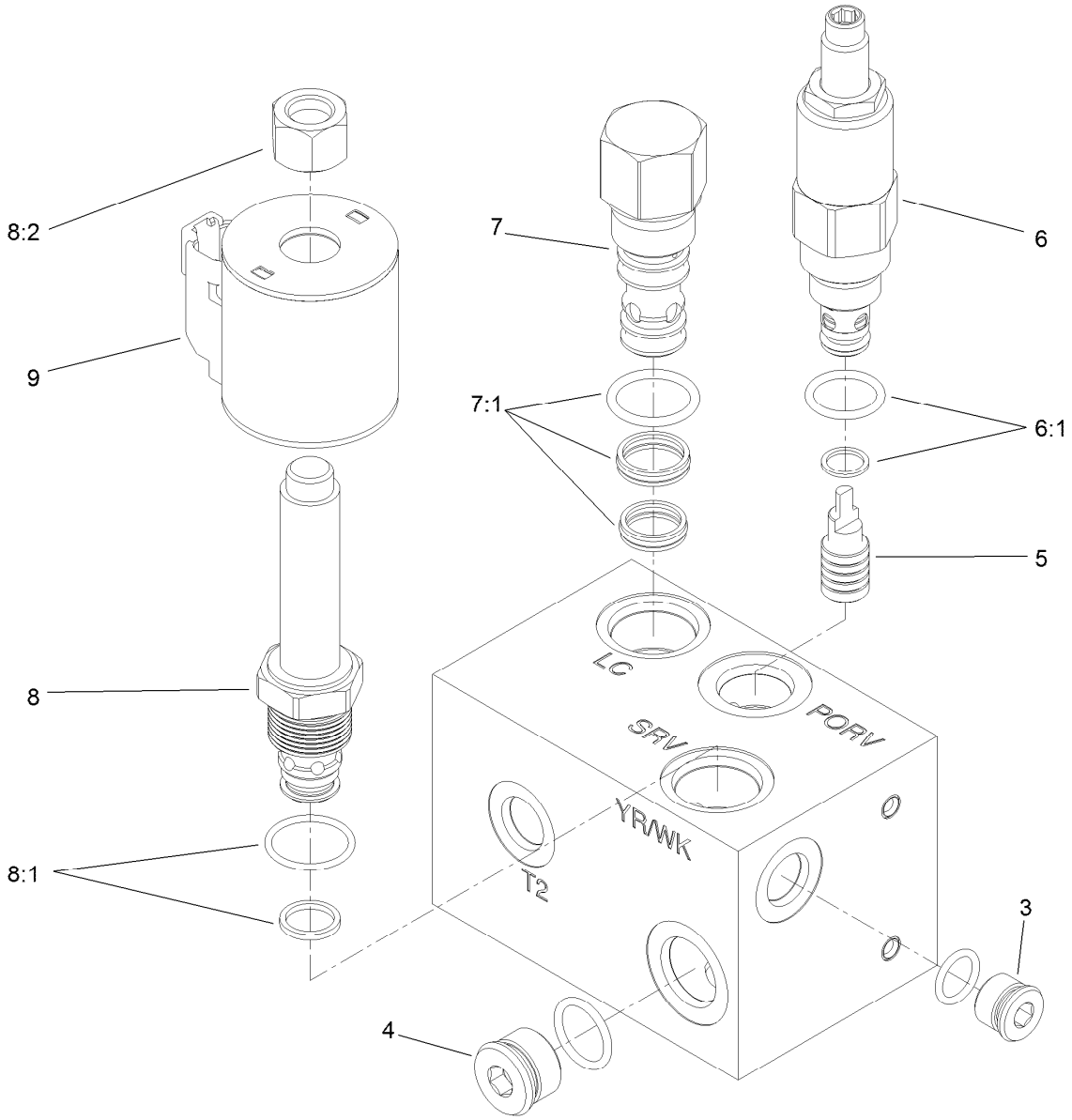

Cutter Wheel Valve Assembly No. 119-4586

Ref.	*Part Number*	*Qty.*	*Description*
3	106-1026	1	Plug-HYD
4	106-1027	1	Plug
5	105-9157	1	Piston-Pilot
6	119-4620	1	Valve-Relief
6:1	105-9156	1	Seal Kit
7	105-9153	1	Element-Logic, Vented
7:1	119-2159	1	Seal Kit
8	130-7609	1	Valve-Relief,
8:1	110-6316	1	Seal Kit
8:2	130-8180	1	Nut-Coil (9/16-24 Unef-2B)
9	119-4619	1	Coil-Solenoid

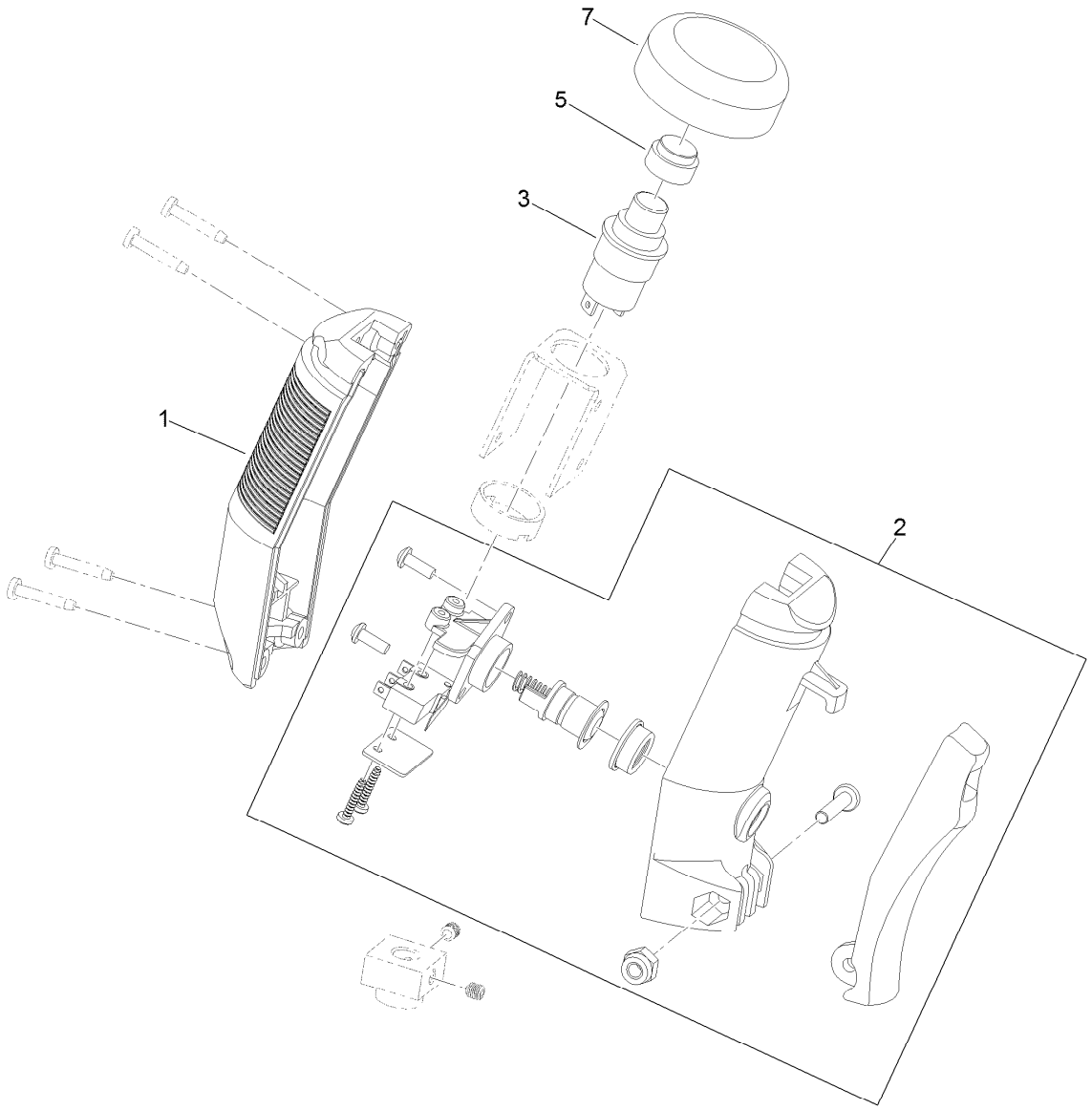

Two-Button Handle Grip Assembly No. 119-4587

Ref.	*Part Number*	*Qty.*	*Description*
1	119-4637	1	Halve-Handle
2	132-8660	1	Swtich Kit
3	119-4640	1	Button-Push, Top
5	119-4642	1	Button-Actuator
7	119-4641	1	Boot-Button

Oil Cooler Assembly

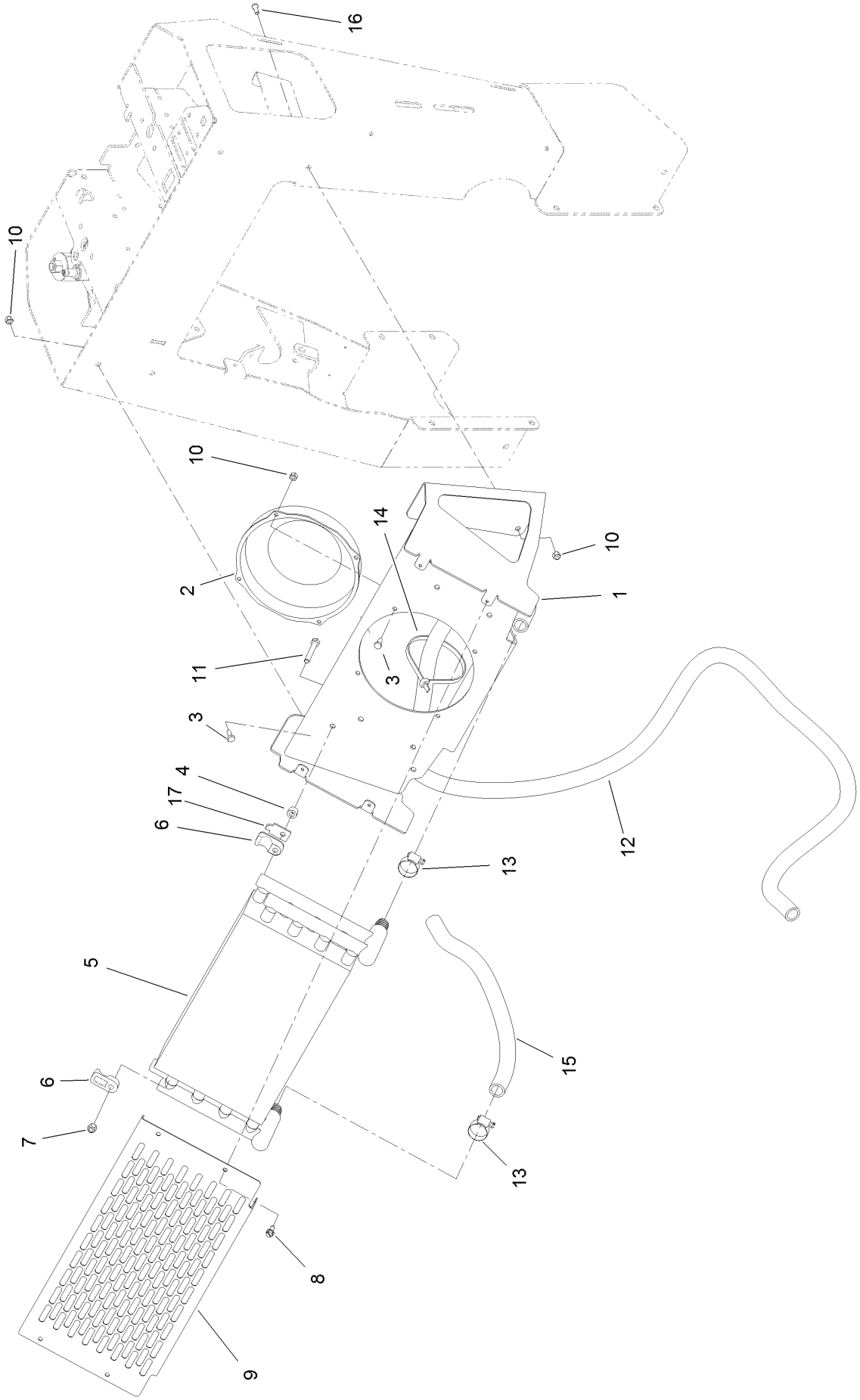

Oil Cooler Assembly (continued)

Ref.	Part Number	Qty.	Description
1	117-6296-01	1	Mount-Cooler
2	104-2809	1	Fan
3	321-3	7	Screw-HH
4	105-5723	4	Spacer-Tube
5	117-6320	1	Cooler-Oil
6	131-0733	8	Clamp
7	3296-29	4	Nut-Lock, NI
8	32104-95	4	Screw-HWH
9	119-4633-01	1	Cover-Cooler
10	3296-42	8	Nut-Lock, NI
11	322-11	4	Screw-HH
12	119-4607	1	Hose-Return
13	2412-129	3	Clamp-Hose
14	3334-945	1	Tie-Cable
15	119-4571	1	Hose-Return
16	3274-31	1	Screw-HSBH
17	131-0642	4	Plate-Support, Clamp

Hydraulic Hose Routing Assembly

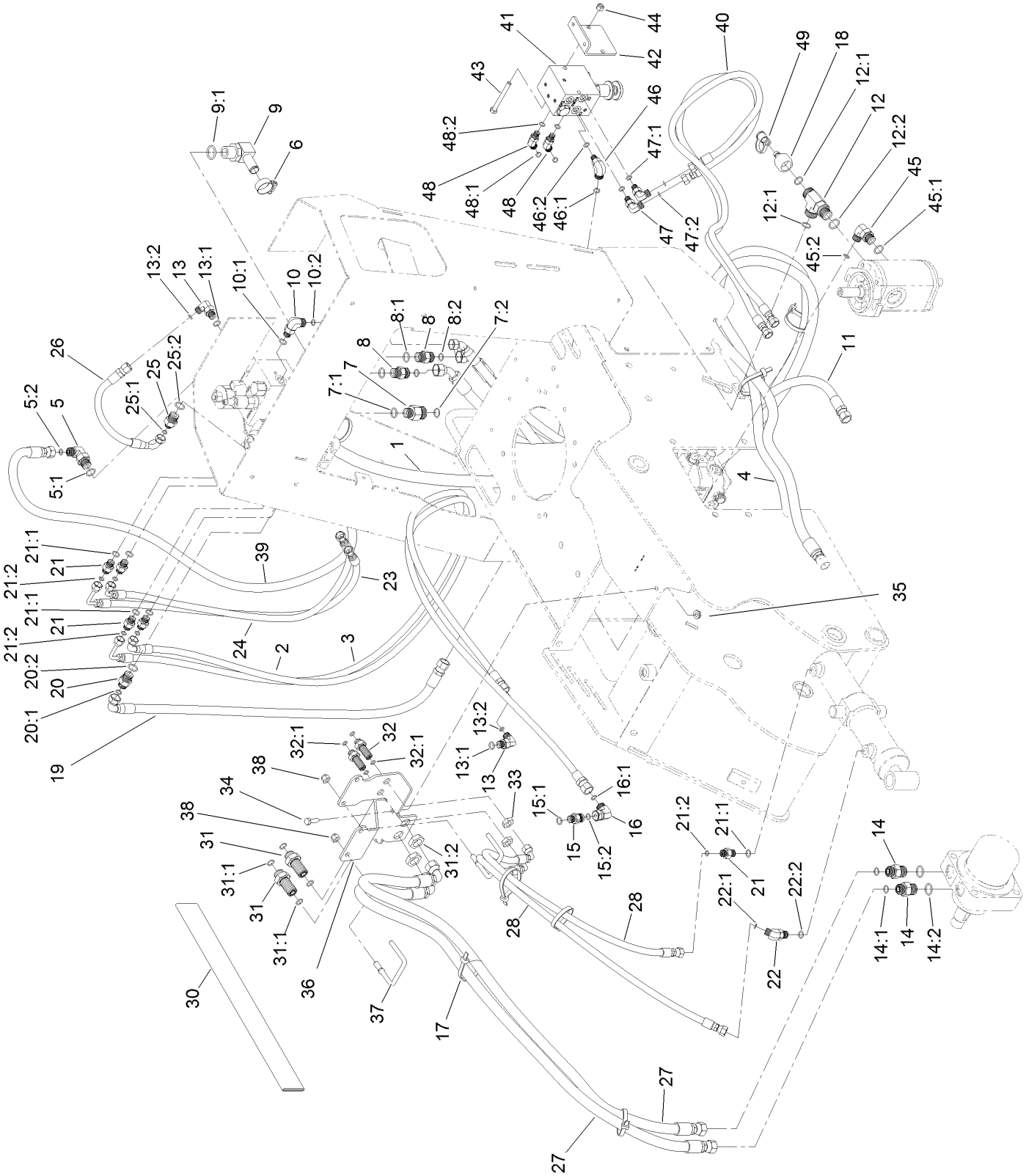

Hydraulic Hose Routing Assembly (continued)

Ref.	Part Number	Qty.	Description
1	119-4589	1	Hose-HYD
2	119-4590	1	Hose-HYD
3	119-4601	1	Hose-HYD
4	121-4540	2	Hose-HYD
5	340-18	1	Fitting-HYD, 90 DEG
5:1	237-79	1	O-Ring
5:2	237-22	1	O-Ring
6	2412-129	1	Clamp-Hose
7	340-155	1	Fitting-Straight
7:1	237-79	1	O-Ring
7:2	237-151	1	O-Ring
8	340-4	2	Fitting-Straight
8:1	237-30	1	O-Ring
8:2	237-79	1	O-Ring
9	353-987	1	Fitting-Elbow, 90
9:1	237-81	1	O-Ring
10	340-77	1	Fitting-Elbow, 90 DEG
10:1	237-22	1	O-Ring
10:2	237-42	1	O-Ring
11	119-4602	1	Hose-HYD
12	340-22	1	Fitting-Tee
12:1	237-65	2	O-Ring
12:2	237-80	1	O-Ring
13	340-82	2	Fitting-Elbow, 90 DEG
13:1	237-42	1	O-Ring
13:2	237-21	1	O-Ring
14	340-6	2	Fitting-Straight
14:1	237-30	1	O-Ring
14:2	237-80	1	O-Ring
15	115-4081	1	Valve-Check
15:1	237-42	1	O-Ring
15:2	237-22	1	O-Ring
16	340-159	1	Elbow-90
16:1	237-22	2	O-Ring
17	3334-945	13	Tie-Cable
18	86-5860	1	Nipple
19	119-4592	1	Hose-HYD
20	340-3	1	Fitting-Straight
20:1	237-22	1	O-Ring
20:2	237-79	1	O-Ring
21	340-1	5	Fitting-Straight
21:1	237-21	1	O-Ring
21:2	237-42	1	O-Ring
22	340-137	1	Fitting
22:1	237-21	1	O-Ring
22:2	237-42	1	O-Ring
23	130-7602	1	Hose-HYD
24	130-7603	1	Hose-HYD
25	340-133	1	Fitting-STR
25:1	237-79	1	O-Ring
25:2	237-21	1	O-Ring
26	119-4594	1	Hose-HYD
27	121-4543	2	Hose ASM-HYD HP
28	121-4544	2	Hose-HYD
30	99-5648	1	Sleeve-Protective
31	340-161	2	Fitting-Bulkhead
31:1	237-30	2	O-Ring
31:2	340-127	1	Nut-Bulkhead
32	94-1444	2	Union-Bulkhead
32:1	237-21	2	O-Ring
33	340-78	2	Nut-Lock
34	322-5	1	Screw-HH
35	32128-20	1	Nut-HF
36	125-0263-03	1	Bracket-Bulkhead
37	121-4555	2	Guide-Hose
38	3296-39	2	Nut-Lock, NI
39	130-7604	1	Hose-HYD
40	130-7605	2	Hose-HYD
41	121-4466	1	Sweep Manifold ASM
42	130-1014-03	1	Bracket-Valve
43	322-14	2	Screw-HH
44	3296-29	2	Nut-Lock, NI
45	340-18	1	Fitting-HYD, 90 DEG
45:1	237-79	1	O-Ring
45:2	237-22	1	O-Ring
46	340-97	1	Fitting-Elbow, 90 DEG
46:1	237-22	1	O-Ring
46:2	237-78	1	O-Ring
47	340-132	2	Fitting-Elbow, 90 DEG
47:1	237-78	1	O-Ring
47:2	237-21	1	O-Ring
48	340-103	2	Fitting-HYD, 45 DEG
48:1	237-78	1	O-Ring
48:2	237-21	1	O-Ring
49	354-79	1	Cap-Dust

Battery and Electrical Assembly

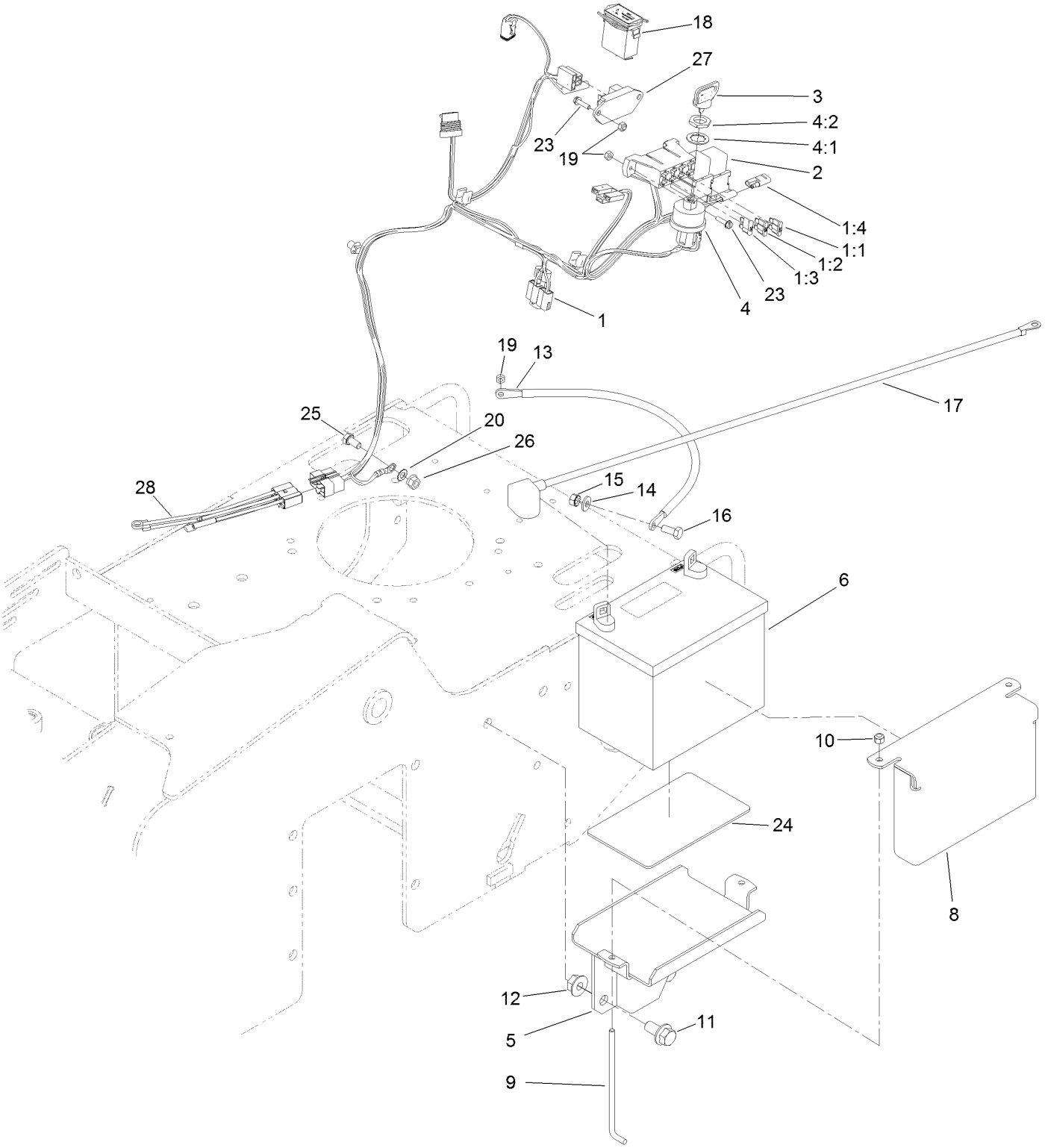

Battery and Electrical Assembly (continued)

Ref.	Part Number	Qty.	Description
1	119-4555	1	Harness-Wire
1:1	109103	1	Fuse-Blade, 30 Amp
1:2	109102	1	Fuse-Blade, 25 Amp
1:3	109101	1	Fuse-Blade, 20 Amp
1:4	116-0053	1	Cap-Plug
2	98-7249	2	Relay
3	63-8360	1	Key-Ignition
4	88-9830	1	Key Switch ASM
4:1	3254-5	1	Washer-Lock
4:2	218-461	1	Nut-HH
5	105-3150-01	1	Tray-Battery
6	104-8162	1	Battery
8	115-6621-03	1	Plate-Hold Down, Battery
9	104-8567	2	Holdown-Battery
10	3296-42	2	Nut-Lock, NI
11	3234-6	2	Screw-HHF
12	32128-49	2	Nut-HHF
13	106-8945	1	Cable-Battery, Positive
14	3256-2	2	Washer-Flat
15	32149-1	2	Nut-Keps
16	322-3	2	Screw-HH
17	117-6422	1	Cable-Battery, Black
18	1-513374	1	Meter-Hour
19	3296-2	5	Nut-Lock, NI
20	3255-8	1	Washer-Lock
23	32105-13	5	Screw-HWH
24	62-4300	1	Pad-Skid, Anti
25	33114-016	1	Screw-HH
26	33004-00	1	Nut-HF
27	100-6170	1	Module-Delay
28	119-4604	1	Harness

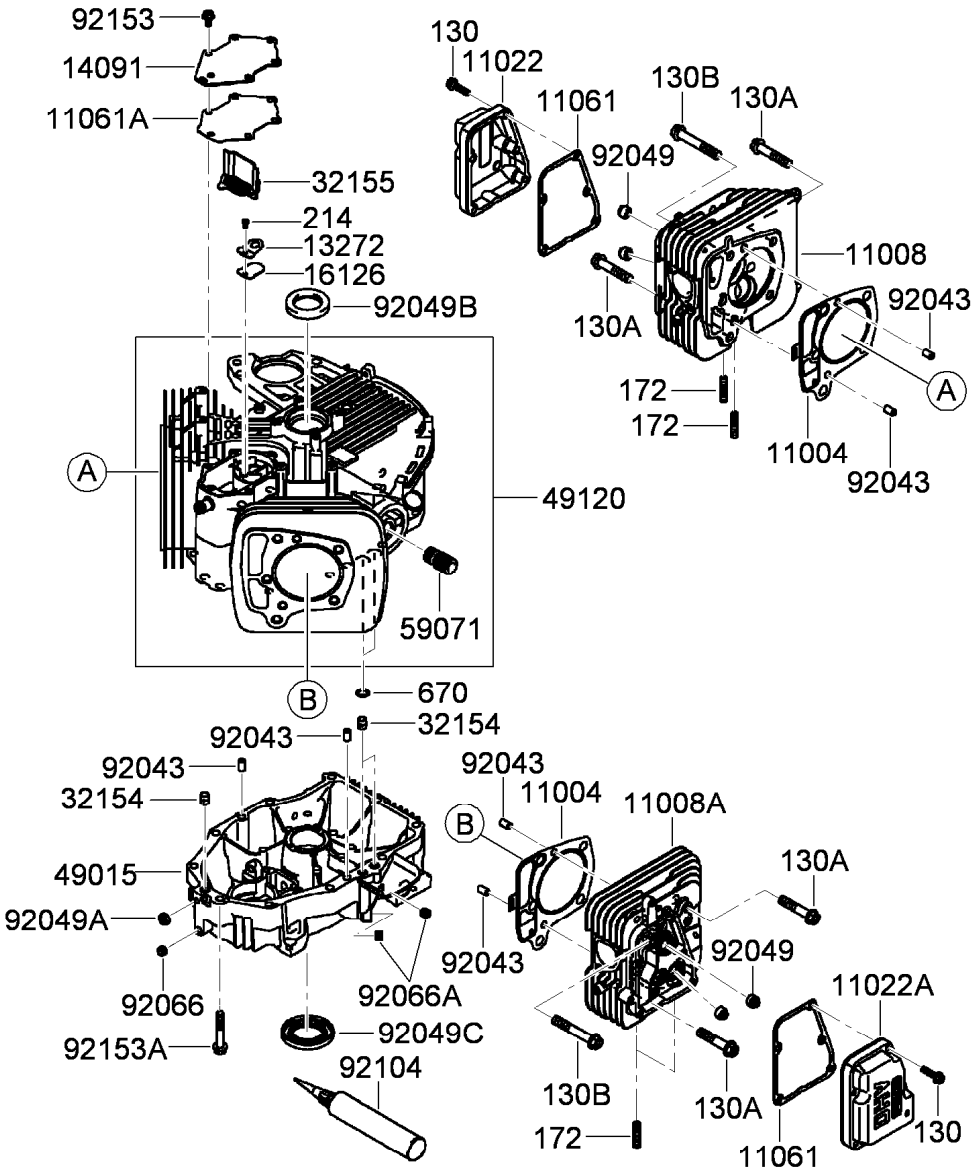

Cylinder and Crankcase Assembly

Ref.	Part Number	Qty.	Description
130	93-8548	10	Bolt-Flanged (6X25)
130A	119-5822	4	Bolt-Flanged (10X50)
130B	119-5823	6	Bolt-Flanged (10X65)
172	114-8658	4	Bolt-Stud (8X18)
214	115-6422	1	Screw-Pan (4X8)
670	95-9771	2	O-Ring (11Mm)
11004	119-5800	2	Gasket-Head
11008	119-5801	1	Head-Cylinder (No.1)
11008A	119-5802	1	Head-Cylinder (No.2)
11022	119-5803	1	Case-Rocker (No.1)
11022A	119-5804	1	Case-Rocker (No.2)
11061	119-5805	2	Gasket-Case, Rocker
11061A	119-5806	1	Gasket-Breather
13272	119-5808	1	Plate-Breather
14091	119-5809	1	Cover-Breather
16126	119-5810	1	Valve-Breather

Ref.	Part Number	Qty.	Description
32154	119-5811	3	Pipe
32155	119-5812	1	Pipe-Breather
49015	119-5813	1	Cover-Crankcase
49120	119-5814	1	Crankcase ASM
59071	95-9715	1	Joint
92043	KW10694	6	Pin
92049	114-8650	4	Seal-Oil, Rv C2 (6X11X10.2)
92049A	119-5816	1	Seal-Oil, So (8X14X5) Hs
92049B	119-5817	1	Seal-Oil, Sd (35X48X8) R Hs
92049C	119-5818	1	Seal-Oil (38X62X8) Mtclv
92066	119-5819	1	Plug
92066A	119-5820	2	Plug
92104	119-5821	1	Gasket-Liquid (Tb1217H)
92153	114-8655	6	Bolt (6X12)
92153A	114-8656	10	Bolt (8X50)

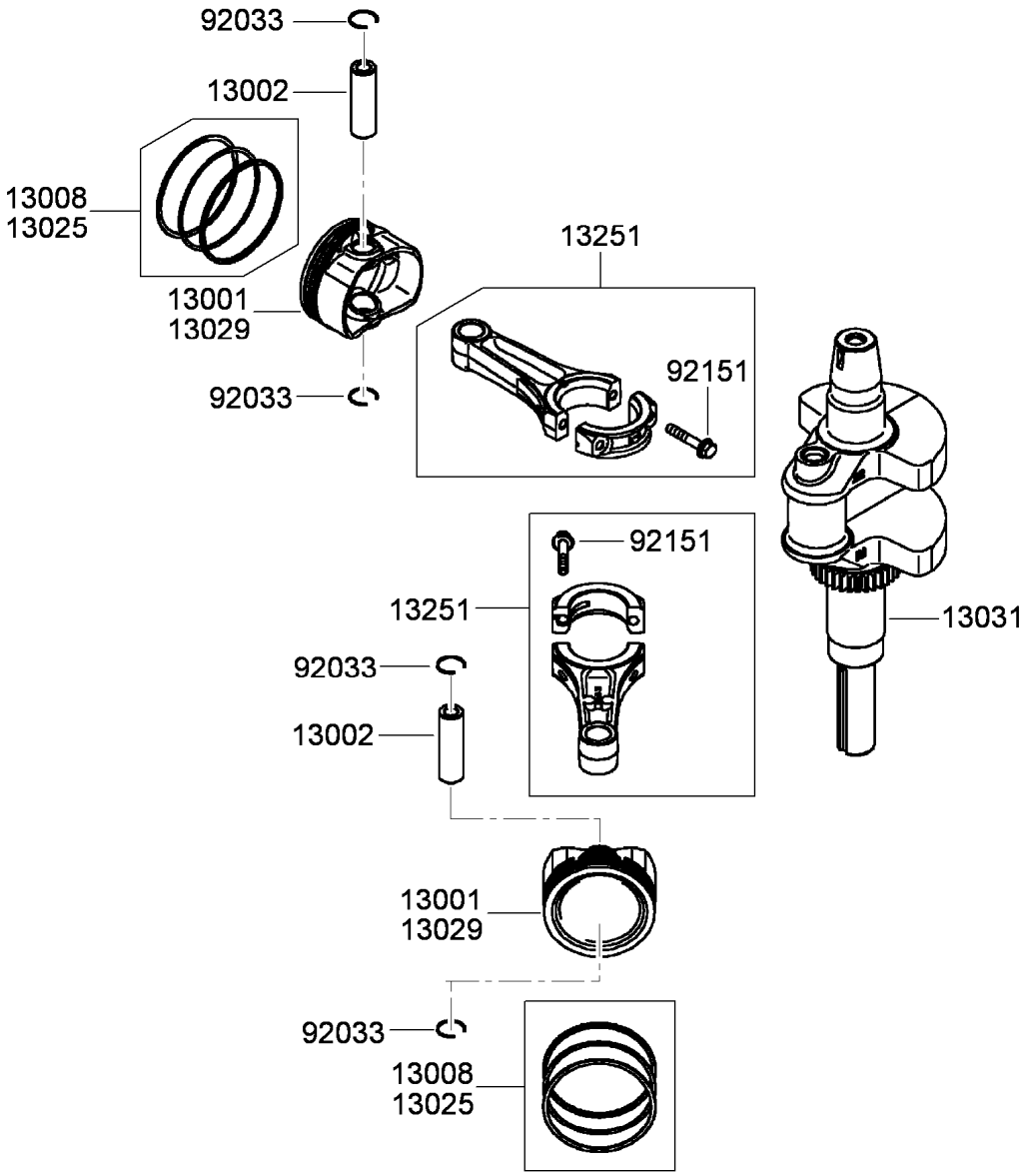

Piston and Crankshaft Assembly

Ref.	*Part Number*	*Qty.*	*Description*
13001	119-5824	2	Piston-Engine
13002	119-5825	2	Pin-Piston
13008	119-5826	2	Piston Ring Set
13025	119-5827	1	Piston Ring Set, L (0.5)
13029	119-5828	1	Piston-Engine, L (0.5)
13031	119-5829	1	Crankshaft ASM
13251	119-5830	2	Connecting Rod ASM
92033	119-5831	4	Ring-Snap
92151	115-6565	4	Bolt (6X35)

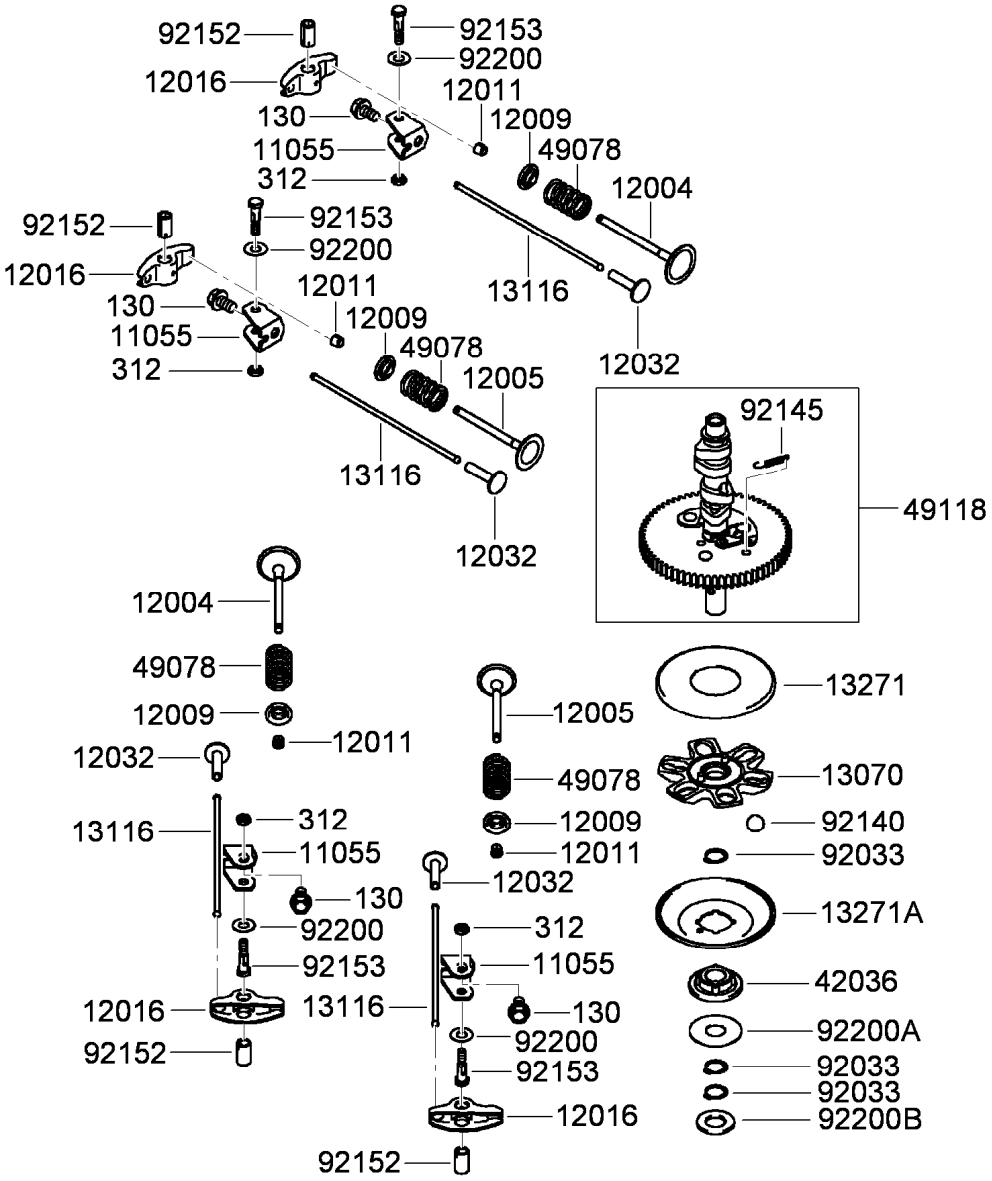

Valve and Camshaft Assembly

Ref.	Part Number	Qty.	Description
130	119-5845	4	Bolt-Flanged (8X14)
312	119-5846	4	Nut-Hex (6MM)
11055	119-5832	4	Bracket
12004	119-5833	2	Valve-Intake
12005	119-5834	2	Valve-Exhaust
12009	108-2525	4	Retainer-Spring, Valve
12011	95-9744	8	Collet
12016	119-5835	4	Arm-Rocker
12032	108-2527	4	Tappet
13070	119-5836	1	Guide-Govenor
13116	119-5837	4	Rod-Push
13271	114-8671	1	Plate

Ref.	Part Number	Qty.	Description
13271A	114-8672	1	Plate-Governor
42036	114-8673	1	Sleeve
49078	119-5838	4	Spring-Valve, Engine (In)
49118	119-5839	1	Camshaft ASM
92033	114-8675	3	Ring-Snap
92140	114-8676	6	Ball
92145	114-8677	1	Spring
92152	119-5840	4	Collar
92153	119-5841	4	Bolt (6X29.5)
92200	119-5842	4	Washer (8.1X18X0.5)
92200A	119-5843	1	Washer (16X42X0.91)
92200B	119-5844	1	Washer (16.3X30X2.28)

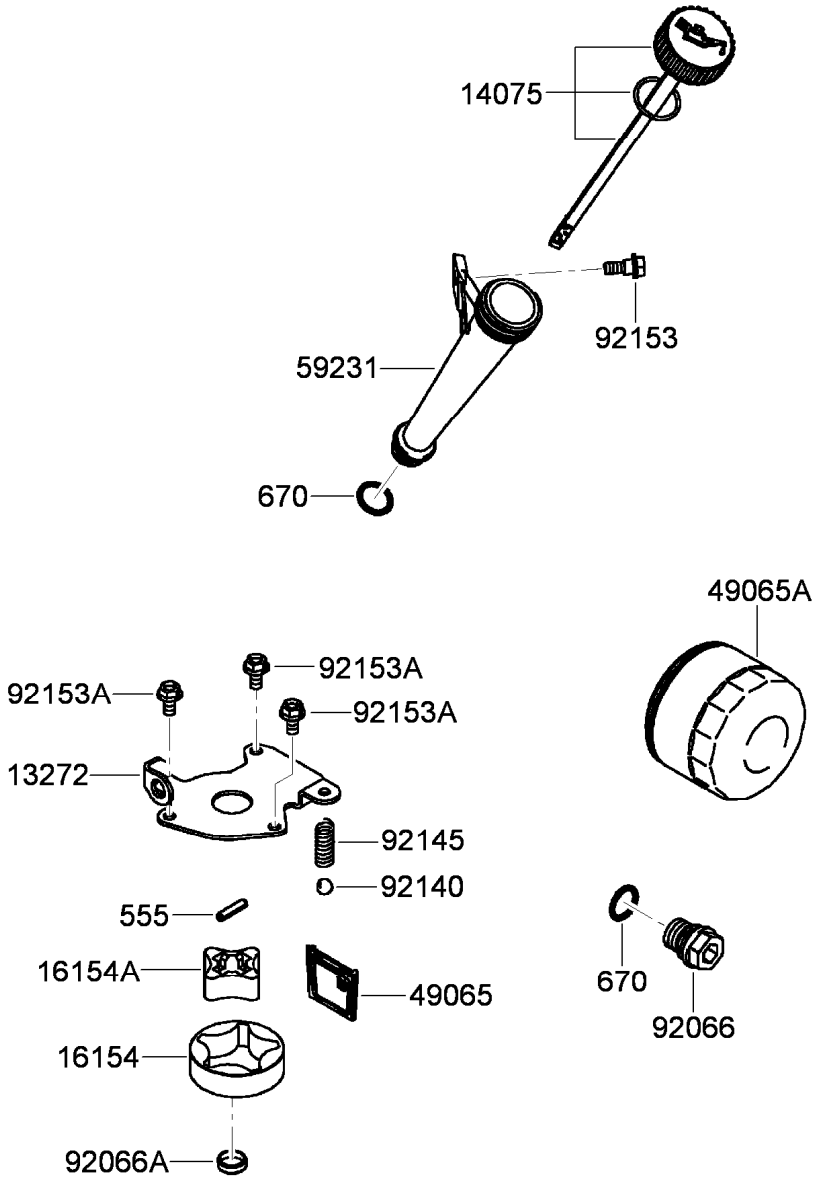

Lubrication Equipment Assembly

Ref.	Part Number	Qty.	Description
555	119-5859	1	Pin-Spring (4X20)
670	1-413506	2	Discontinued
13272	119-5847	1	Plate-Rotor
14075	119-5848	1	Oil Gauge Cap ASM
16154	119-5849	1	Rotor-Pump, Outer
16154A	119-5850	1	Rotor-Pump, Inner
49065	119-5851	1	Filter-Oil
49065A	119-5852	1	Filter-Oil
59231	119-5853	1	Tube-Filler, Oil
92066	119-5854	1	Plug
92066A	119-5855	1	Plug
92140	119-5856	1	Ball
92145	119-5857	1	Spring
92153	119-5858	1	Bolt
92153A	115-6419	3	Bolt (6X12)

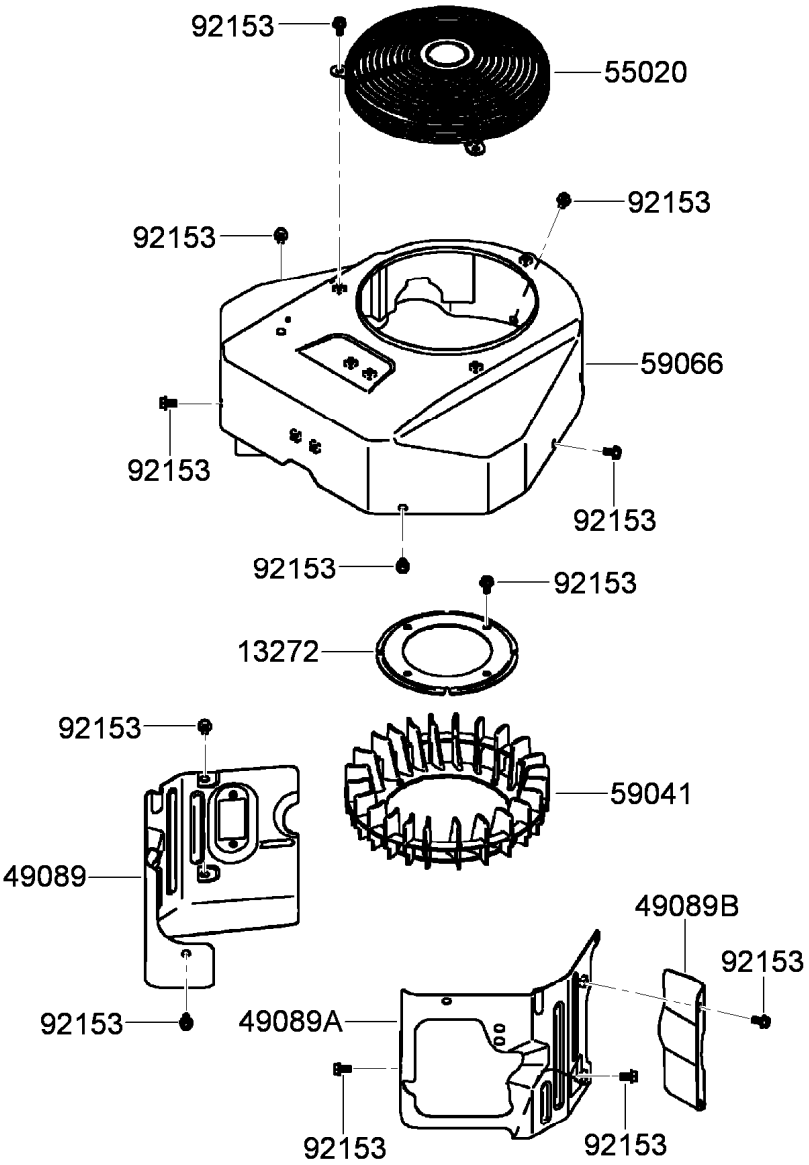

Cooling Equipment Assembly

Ref.	*Part Number*	*Qty.*	*Description*
13272	119-5860	1	Plate-Fan
49089	119-5862	1	Shroud-Engine
49089A	119-5863	1	Shroud-Engine
49089B	119-5864	1	Shroud-Engine
55020	119-5865	1	Guard
59041	119-5867	1	Fan
59066	119-5868	1	Housing-Fan
92153	114-8655	18	Bolt (6X12)

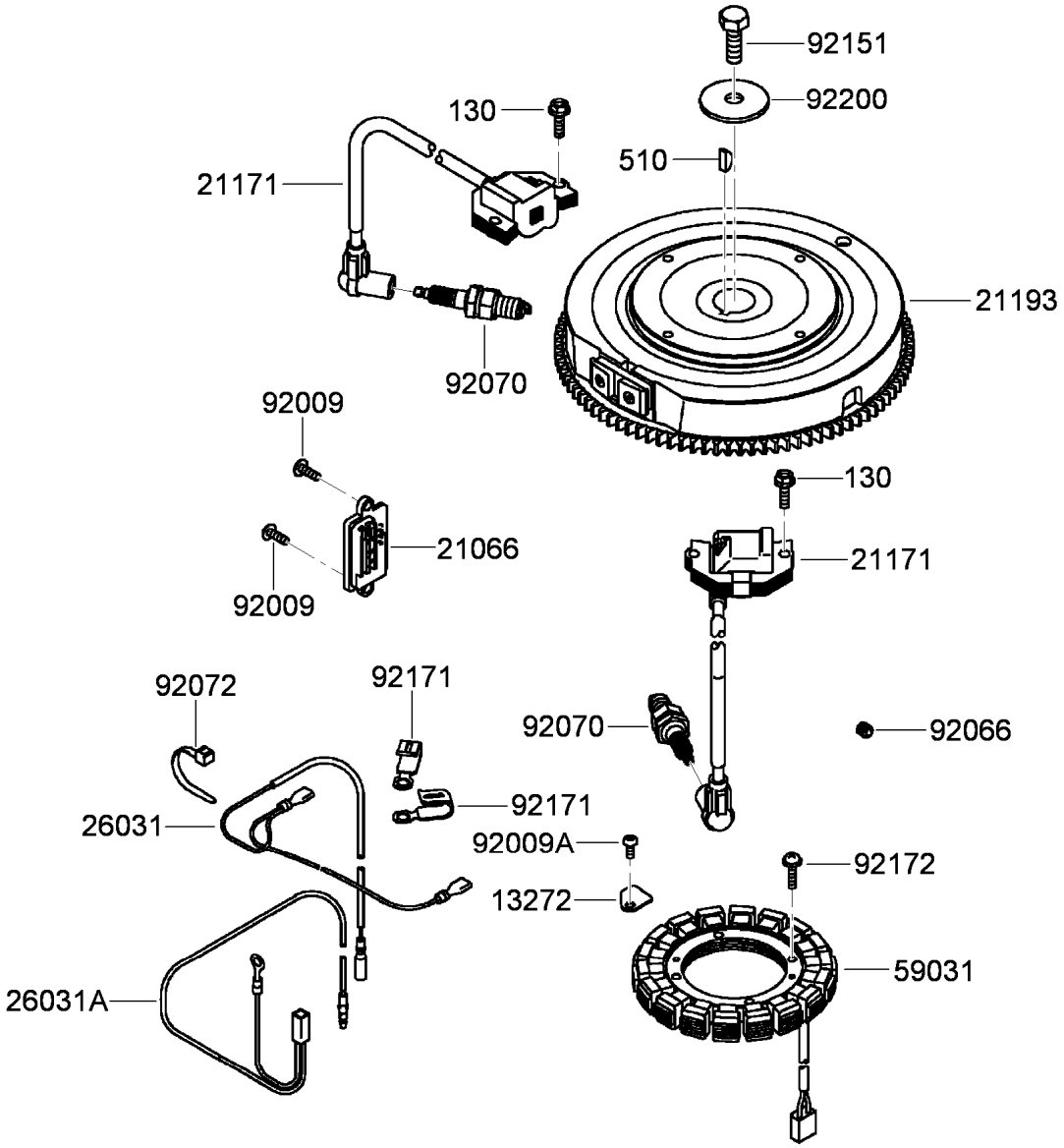

Electric Equipment Assembly

Ref.	Part Number	Qty.	Description
130	95-9893	4	Bolt-Flanged (6X20)
510	KW10163	1	Key-Woodruff
13272	119-5870	1	Plate
21066	120-7356	1	Regulator-Voltage
21171	119-5872	2	Ignition Coil ASM
21193	119-5874	1	Flywheel ASM
26031	119-5876	1	Harness
26031A	119-5877	1	Harness
59031	120-7355	1	Coil-Charging

Ref.	Part Number	Qty.	Description
92009	119-5879	2	Screw
92009A	95-9716	1	Screw
92066	119-5820	1	Plug
92070	92-2153	2	Plug-Spark
92072	115-6585	1	Band
92151	115-6408	1	Bolt (12X30)
92171	115-8665	2	Clamp
92172	115-4030	4	Screw (5X20)
92200	115-4031	1	Washer (12.2X46X3)

Carburetor Assembly

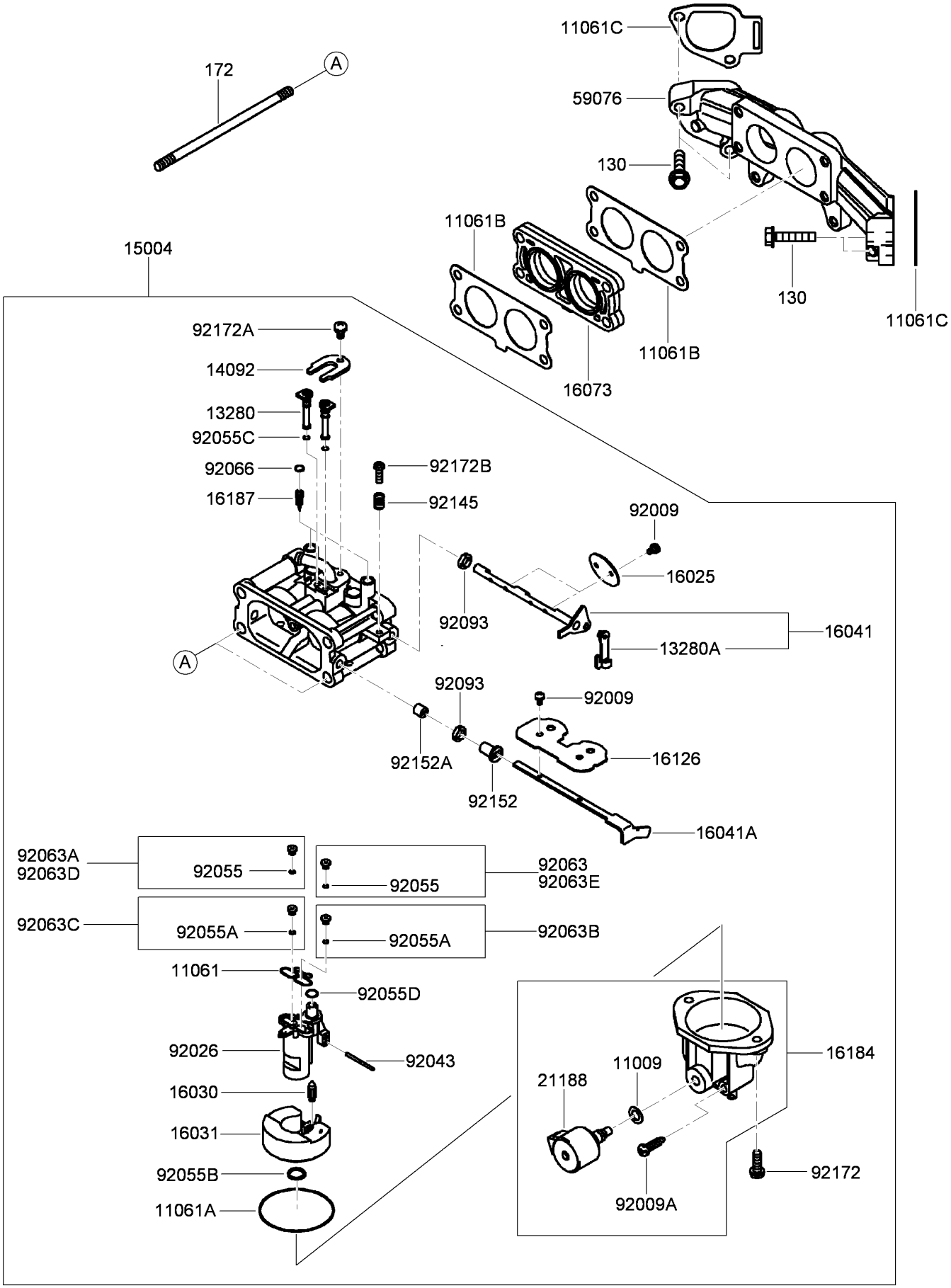

Carburetor Assembly (continued)

Ref.	Part Number	Qty.	Description
130	119-5940	4	Bolt-Flanged (6X30)
172	119-5941	2	Bolt-Stud (6X115)
11009	119-5895	1	Gasket
11061	119-5896	1	Gasket
11061A	119-5897	1	Gasket
11061B	119-5898	2	Gasket-Carburetor/Manifold
11061C	119-5899	2	Gasket-Manifold
13280	119-5901	2	Holder
13280A	119-5902	1	Holder
14092	119-5903	1	Cover
15004	119-5904	1	Carburetor ASM
16025	119-5905	2	Valve-Throttle
16030	119-5906	1	Valve-Float
16031	119-5907	1	Float
16041	119-5908	1	Carburetor Throttle Shaft ASM
16041A	119-5909	1	Shaft-Choke, Carburetor
16073	119-5910	1	Insulator
16126	119-5911	1	Valve
16184	119-5912	1	Float Chamber ASM
16187	119-5913	2	Needle-Jet
21188	119-5914	1	Solenoid
59076	119-5915	1	Manifold-Intake
92009	119-5916	6	Screw
92009A	119-5917	1	Screw-Drain
92026	119-5918	1	Spacer
92043	119-5919	1	Pin-Float
92055	119-5920	1	O-Ring
92055A	119-5921	2	O-Ring
92055B	132-8667	1	O-Ring
92055C	119-5923	2	O-Ring
92055D	119-5924	1	O-Ring
92063	119-5926	1	Jet-Main (No. 108)
92063A	119-5927	1	Jet-Main (No. 104)
92063B	119-5928	1	Jet-Main (No. 114)
92063C	119-5929	1	Jet-Main (No. 110)
92063D	119-5930	1	Jet-Main (No. 107)
92063E	119-5931	1	Jet-Main (No. 111)
92066	119-5932	2	Plug-Expansion
92093	119-5933	2	Seal (6.9)
92145	119-5934	1	Spring
92152	119-5935	1	Collar
92152A	119-5936	1	Collar
92172	119-5937	2	Screw (M5)
92172A	119-5938	1	Screw (M4)
92172B	119-5939	1	Screw-Adjust, Throttle

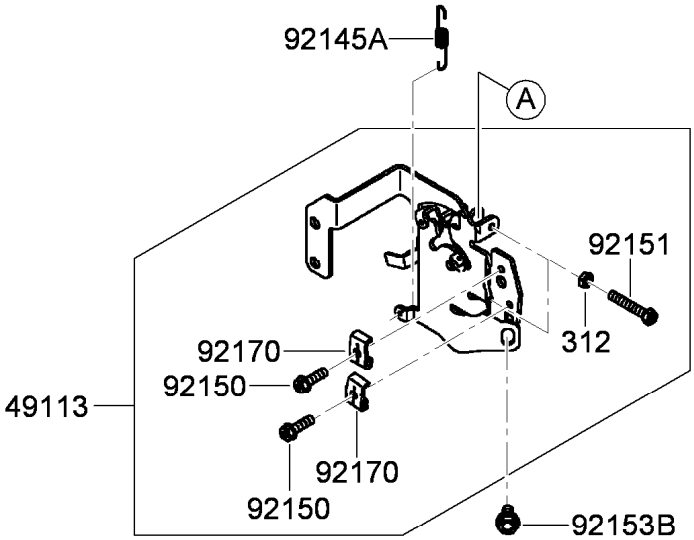

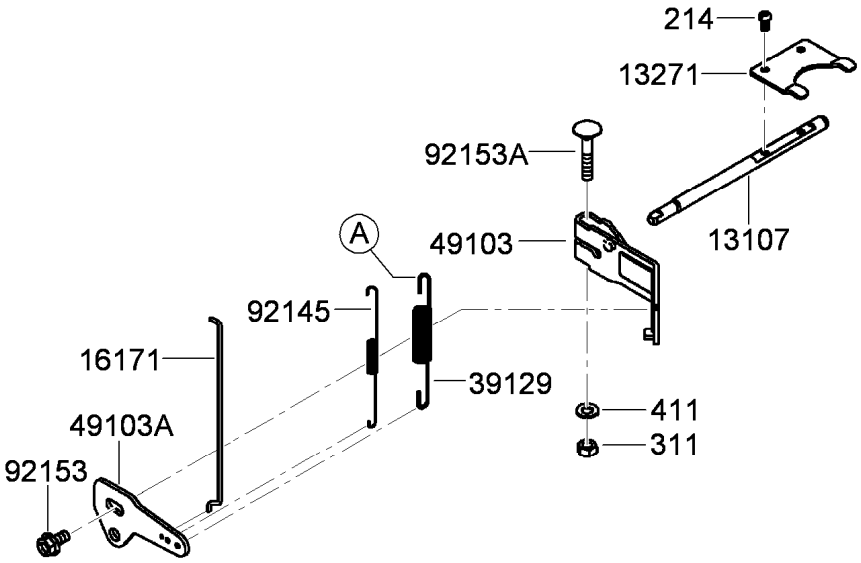

Control Equipment Assembly

Ref.	Part Number	Qty.	Description
214	115-6422	2	Screw-Pan (4X8)
311	114-8698	1	Nut-Hex (6MM)
312	119-5894	2	Nut-Hex (5MM)
411	115-6423	1	Washer-Plain (6MM)
13107	119-5882	1	Shaft-Governor
13271	119-5883	1	Plate
16171	119-5884	1	Link
39129	119-5885	1	Spring-Governor
49103	119-5886	1	Arm-Governor
49103A	119-5887	1	Arm-Governor

Ref.	Part Number	Qty.	Description
49113	119-5888	1	Control Panel ASM
92145	119-5889	1	Spring
92145A	119-5890	1	Spring
92150	95-9853	2	Bolt (5X18)
92151	119-5891	2	Bolt (5X30)
92153	119-5892	1	Bolt (6X12)
92153A	115-6420	1	Bolt (6X35)
92153B	119-5892	1	Bolt (6X12)
92170	115-6421	2	Clamp

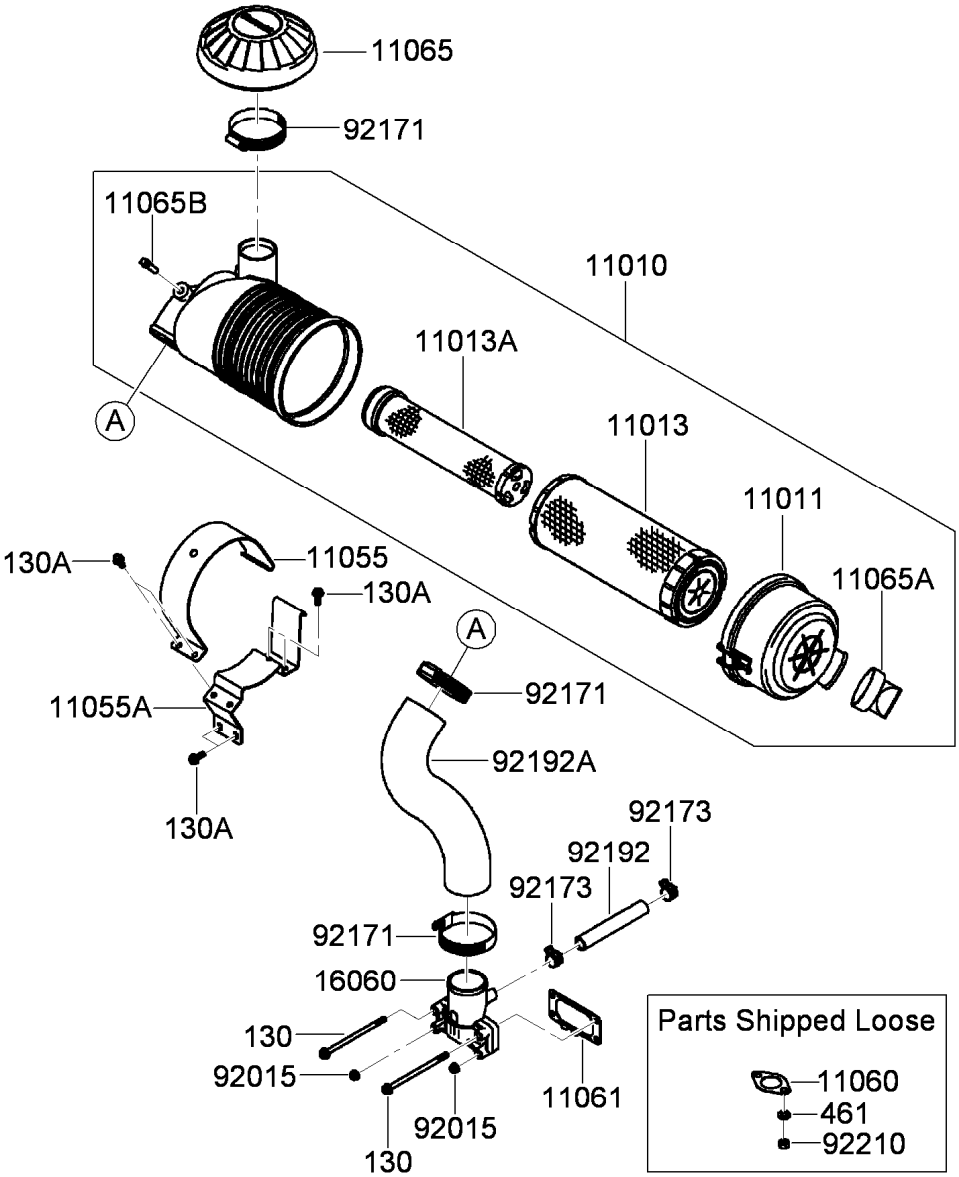

Air Filter and Muffler Assembly

Ref.	Part Number	Qty.	Description
130	119-5960	2	Bolt-Flanged (6X110)
130A	119-5961	6	Bolt-Flanged (6X16)
461	119-5962	4	Washer-Spring (8MM)
11010	119-5942	1	Air Filter ASM
11011	119-5943	1	Case-Filter, Air
11013	119-5944	1	Element-Filter, Air (Outer)
11013A	119-5945	1	Element-Filter, Air (Inner)
11055	119-5946	1	Bracket
11055A	119-5947	1	Bracket
11060	119-5948	2	Gasket-Muffler
11061	119-5949	1	Gasket

Ref.	Part Number	Qty.	Description
11065	119-5950	1	Cap
11065A	119-5951	1	Cap
11065B	119-5952	1	Cap
16060	119-5953	1	Pipe-Intake
92015	119-5954	2	Nut
92171	119-5955	3	Clamp
92173	119-5956	2	Clamp
92192	119-5957	1	Tube (12.6X18.6X118)
92192A	119-5958	1	Tube
92210	119-5959	4	Nut (M8)

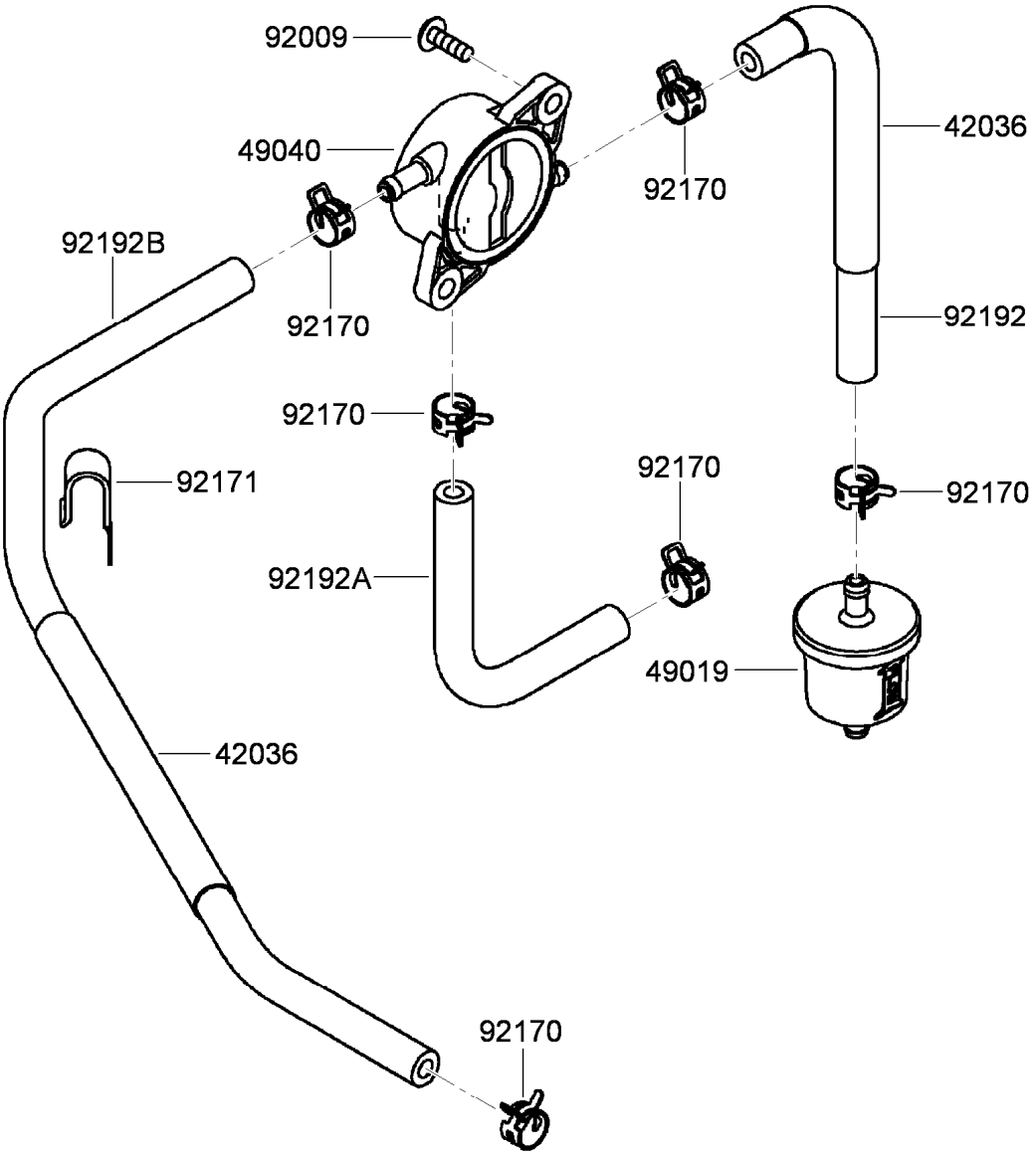

Fuel Tank and Valve Assembly

Ref.	*Part Number*	*Qty.*	*Description*
42036	119-5963	2	Sleeve
49019	121-4570	1	Filter-Fuel
49040	119-5965	1	Pump-Fuel
92009	119-5879	2	Screw
92170	119-5967	6	Clamp
92171	119-5968	1	Clamp
92192	119-5969	1	Tube (6.35X12.7X185)
92192A	119-5970	1	Tube (6.4X12.7X150)
92192B	119-5971	1	Tube (6.35X12.7X390)

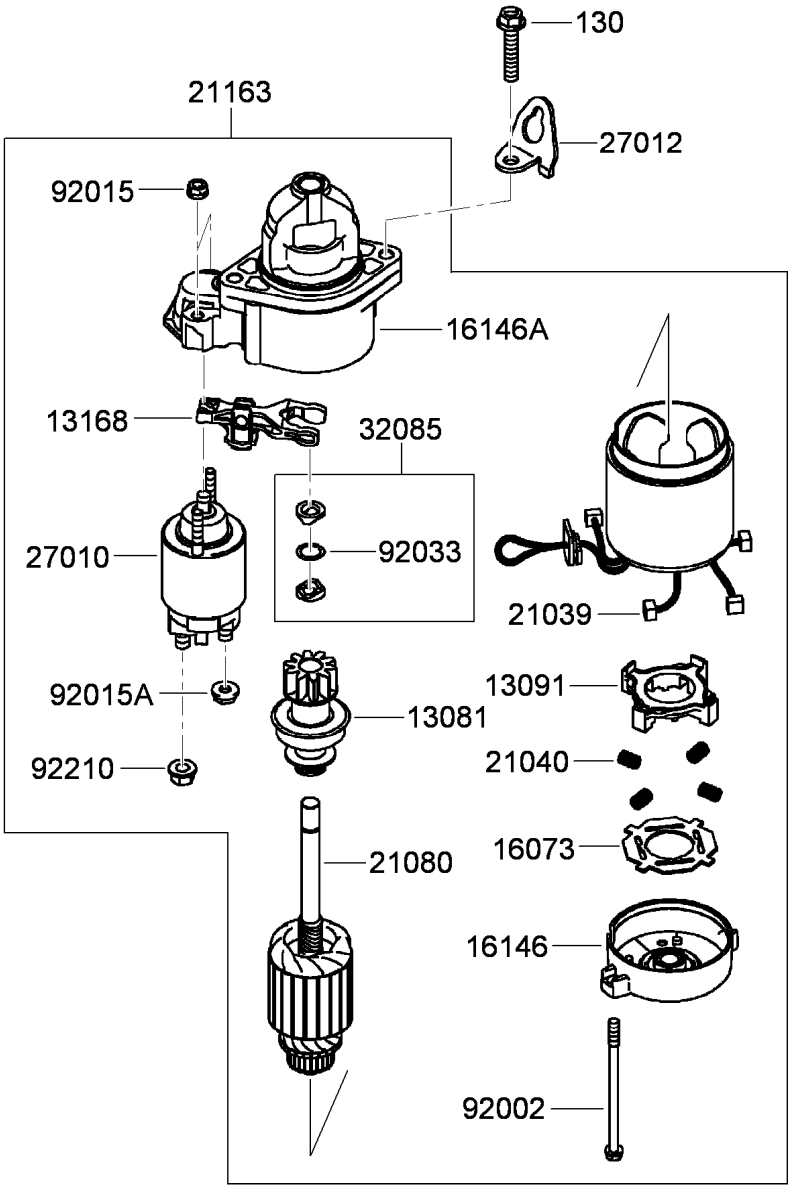

Starter Assembly

Ref.	Part Number	Qty.	Description
130	119-5991	2	Bolt-Flanged (8X40)
13081	119-5972	1	Clutch ASM
13091	119-5973	1	Holder-Brush
13168	119-5974	1	Lever-Shift
16073	119-5975	1	Insulator
16146	119-5976	1	Cover ASM
16146A	119-5977	1	Cover ASM
21039	119-5978	4	Brush
21040	119-5979	4	Spring-Brush
21080	119-5980	1	Armature

Ref.	Part Number	Qty.	Description
21163	119-5981	1	Starter-Electric
27010	119-5982	1	Switch
27012	119-5983	1	Hook
32085	119-5985	1	Stopper
92002	119-5986	2	Bolt
92015	119-5987	2	Nut
92015A	119-5988	1	Nut
92033	119-5989	1	Ring-Snap
92210	119-5990	1	Nut

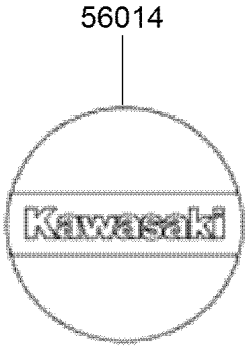

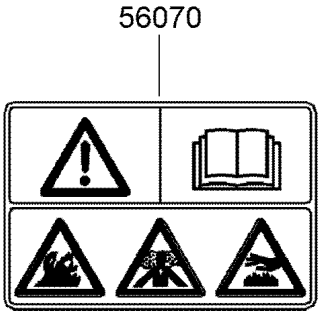

Label Set

Ref.	Part Number	Qty.	Description
56014	119-5992	1	Emblem
56070	115-6469	1	Label-Warning

Attachments and Accessories

For 23208 STX-26 Stump Grinder

Product Name	Model/Part
CE Kit	22368
Spark Arrestor Screen	94-8157

For 23208G STX-26 Stump Grinder

Product Name	Model/Part
Spark Arrestor Screen	94-8157

Notes:

Notes:

TORO®

Count on it.