Form No. 3416-868 Rev E

TORO®

Count on it.

Parts Catalog

Groundsmaster® 3500-D

Rotary Mower

Model No. 30807—Serial No. 401310001 and Up

Register at www.Toro.com.
Original Instructions (EN)

CE

3416-868 E

Ordering Replacement Parts

To order replacement parts, please supply the part number, the quantity, and the description of each part desired.

Understanding Reference Numbers

Each identified part in an illustration has a reference number. The reference number for a part also appears in the parts list, along with other information about the part.

This catalog uses two special reference number formats, one to indicate parts in a service assembly and another to indicate the quantity of a given part in an illustration.

Service Assembly Reference Numbers

Parts in service assemblies have reference numbers in the form a:b. The a represents the reference number of the entire service assembly and the b represents a sequential number unique to each part within the service assembly.

For example, a wheel assembly might be identified by reference number 6, the tire by 6:1, the valve by 6:2, and the wheel by 6:3. When you order the assembly identified by reference number 6, you receive all parts identified by reference numbers 6:1,6:2, and 6:3. However, you may also order any part individually. Reference numbers of this type appear in illustration and in parts lists.

Reference Numbers Indicating Quantity

In an illustration, if a reference number indicates more than one part, the reference number has the form nX y. The n represents the quantity of the part, the X is the multiplication symbol, and the y represents the reference number.

For example, in an illustration, the reference number 2X 37 means that two of the parts identified by reference number 37 are indicated.

Contents

Frame and Roll-Over Protection System Assembly . . . 5
Engine Installation Assembly . . . 6
Air Cleaner and Exhaust Assembly . . . 8
Air Cleaner Assembly No. 93-2190 . . . 9
Radiator and Oil Cooler Assembly . . . 10
Rear Lift Arm and Carrier Frame Assembly . . . 11
Hydraulic Cylinder Assembly No. 112-9916 . . . 12
Sidewinder Carrier Assembly . . . 13
Scissor Frame and Link Assembly . . . 15
Hydraulic Motor and Foot Guard Assembly . . . 16
Gear Motor Assembly No. 117-5141 . . . 17
Fuel Tank Assembly . . . 18
Hydraulic Tank and Filter Assembly . . . 19
Battery Assembly . . . 20
Seat Assembly . . . 21
Control Panel Assembly . . . 22
Parking Brake and Dash Cover Assembly . . . 23
2-Spool Control Valve Assembly . . . 24
2-Spool Control Valve Assembly No. 95-8581 . . . 25
Hydraulic Manifold Assembly No. 121-3570 . . . 26
Steering Arm Assembly . . . 27
Steering Valve Assembly No. 121-7856 . . . 28
Floorplate Assembly . . . 29
Traction Pedal Assembly . . . 30
Hood Assembly . . . 31
Wheel Motor and Brake Assembly . . . 32
Hydraulic Motor Assembly No. 110-8785 . . . 33
Hydraulic Motor Assembly No. 110-8786 . . . 34
Brake Assembly No. 104-7705 . . . 35
Rear Fork and Wheel Assembly . . . 36
Hydraulic Cylinder Assembly No. 94-8141 . . . 37
Hydraulic Motor Assembly No. 95-8694 . . . 38
Neutral Arm Assembly . . . 39
Gear Pump and Piston Pump Assembly . . . 40
Hydraulic Pump Assembly No. 104-4890 . . . 41
Hydraulic Gear Pump Assembly No. 108-9036 . . . 43
Traction Hydraulic Assembly . . . 44
Lift Hydraulic Assembly . . . 45
Steering Hydraulic Assembly . . . 46
Sidewinder Hydraulic Assembly . . . 47
Mow Hydraulic Assembly . . . 48
Roller and Carrier Frame Assembly . . . 49
Roller Assembly No. 112-5265 . . . 50
Height-of-Cut Bracket Assembly . . . 51
Chamber, Blade and Spindle Assembly . . . 52
Spindle Assembly No. 115-3435 . . . 53
Crankcase Assembly . . . 54
Oil Pan and Dipstick Assembly . . . 55
Cylinder Head Assembly . . . 56
Gear Case and Oil Filter Cartridge Assembly . . . 57
Cylinder Head Cover Assembly . . . 58
Main Bearing Case Assembly . . . 59
Camshaft and Idle Gear Shaft Assembly . . . 60
Piston and Crankshaft Assembly . . . 61

© 2021—The Toro® Company
8111 Lyndale Avenue South
Bloomington, MN 55420

Contact us at www.Toro.com.
Printed in the USA.
All Rights Reserved

Contents (continued)

Fuel Camshaft and Governor Shaft Assembly . . . 62
Idle Apparatus and Stop Solenoid Assembly . . . 63
Injection Pump Assembly . . . 64
Governor Assembly . . . 65
Speed Control Plate Assembly . . . 66
Nozzle Holder and Glow Plug Assembly . . . 67
Nozzle Holder Assembly . . . 68
Alternator, Pulley and Fan Assembly . . . 69
Alternator Components Assembly . . . 70
Starter and Flywheel Assembly . . . 71
Starter Component Assembly . . . 72
Water Flange and Thermostat Assembly . . . 73
Water Pump Assembly . . . 74
Valve and Rocker Arm Assembly . . . 75
Inlet and Exhaust Manifold Assembly . . . 76
Miscellaneous Engine Parts . . . 77
Attachments and Accessories . . . 78

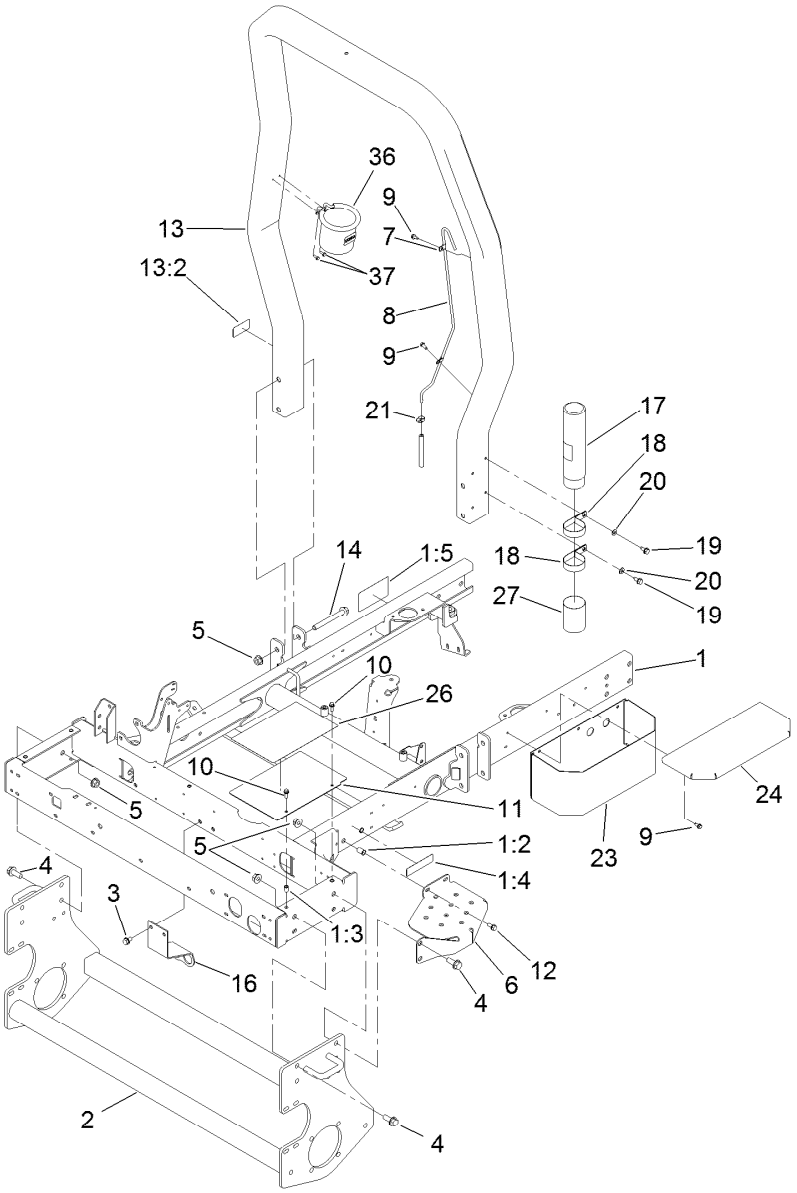

Frame and Roll-Over Protection System Assembly

Ref.	Part Number	Qty.	Description
1	121-3635	1	Frame
1:2	32148-8	2	Nut-Clinch
1:3	32148-6	4	Nut-Clinch
1:4	117-2718	1	Decal-Arrester, Spark
1:5	117-3270	1	Decal-Danger
2	95-8568-03	1	Frame-Lower
3	32144-15	2	Screw-HHFTF
4	3234-38	8	Screw-HHF
5	32128-49	12	Nut-HHF
6	99-3375-03	1	Step
7	2412-72	2	Clip-Closed, Insulated
8	95-8615	1	Tube-Breather
9	32144-10	5	Screw-HWH
10	3234-4	2	Screw-HHF
11	104-0468-01	1	Cover-Frame
12	3234-5	2	Screw-HHF

Ref.	Part Number	Qty.	Description
13	127-8493	1	ROPS ASM
13:2	127-8596	1	Decal-ROPS
14	117-3176	4	Screw-HHF
16	115-3417-03	1	Bracket-Bulkhead, Scissor
17	104-7050	1	Tube-Manual
18	2412-133	2	Clamp-R
19	32144-70	2	Screw-HWHTF
20	3256-23	2	Washer-Plain
21	2412-108	1	Clamp-Worm
23	104-4634-03	1	Toolbox
24	104-4633-03	1	Cover-Toolbox
26	121-3623	1	Decal-Danger
27	104-7048	1	Cap-Housing
36	117-2378	1	Holder-Bag
37	32144-1	2	Screw-Taptite

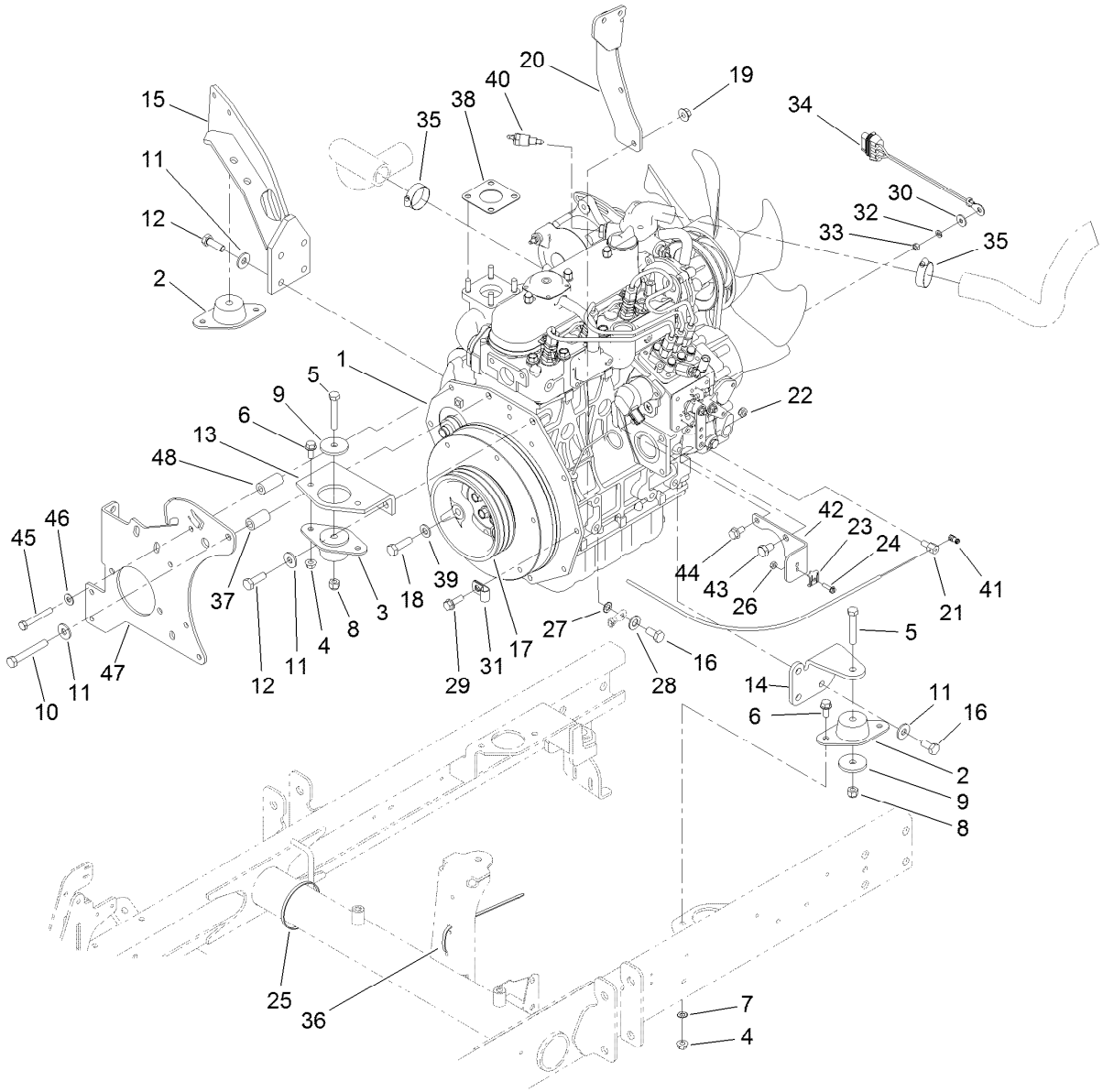

Engine Installation Assembly

Ref.	Part Number	Qty.	Description
1	119-2025	1	Engine ASM
2	83-1030	2	Mount-Engine
3	93-5265	1	Mount-Engine
4	32128-20	6	Nut-HF
5	323-11	3	Screw-HH
6	3234-5	6	Screw-HHF
7	3255-8	1	Washer-Lock
8	3296-39	3	Nut-Lock, NI
9	80-8560	3	Washer-Hardened
10	42-9370	1	Screw-HH
11	80-6990	9	Washer-Hardened
12	95-8812	5	Screw-HH
13	99-3618-03	1	Mount-Engine, Front
14	95-8937-03	1	Mount-Engine, LH
15	100-4838-03	1	Mount-Engine
16	63-7790	4	Screw-Cap
17	99-3626-03	1	Pulley
18	56-2140	3	Screw-HH
19	32128-44	2	Nut
20	115-3487-03	1	Bracket-Mount, Fuel Filter
21	98-9311	1	Swivel-Throttle

Ref.	Part Number	Qty.	Description
22	3296-20	1	Nut-Lock, NI
23	81-1690	1	Clamp-Cable
24	32105-13	1	Screw-HWH
25	3290-379	2	Tie-Cable
26	3296-2	1	Nut-Lock, NI
27	3255-9	1	Washer-Lock
28	3256-25	1	Washer-Flat
29	3234-17	2	Screw-HHF
30	3256-78	1	Washer-Flat
31	2412-10	1	Clamp-R
32	43-5930	1	Washer-Lock, Spring
33	48-7890	1	Nut-Hex
34	99-3441	1	Harness-Wire, Fusible Link
35	2412-34	2	Clamp-Hose
36	3290-378	14	Tie-Cable
37	95-8736	1	Spacer
38	98-9611	1	Gasket
39	3256-24	3	Washer-Flat
40	106-7772	1	Thermoswitch
41	112-9919	1	Stop-Cable, Throttle
42	110-9009-03	1	Bracket-Cable, Throttle

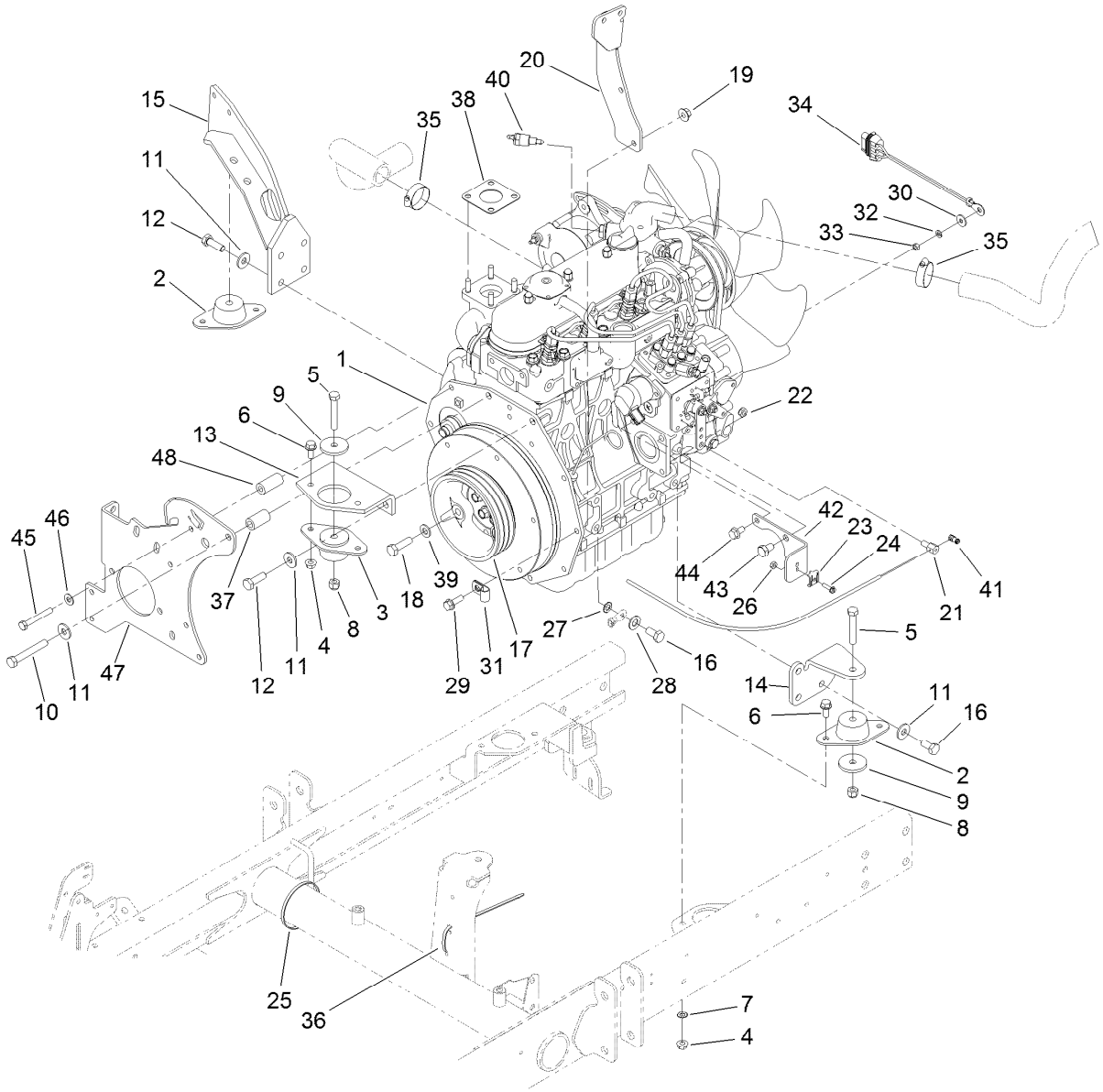

Engine Installation Assembly (continued)

Ref.	Part Number	Qty.	Description
43	70-8470	1	Screw-HH
44	33104-016	1	Screw-HHF
45	33114-060	3	Screw-HH
46	87-8640	3	Washer-Flat
47	120-3375-03	1	Plate-Mount, Pump
48	95-8941	4	Spacer-Mount, Pump

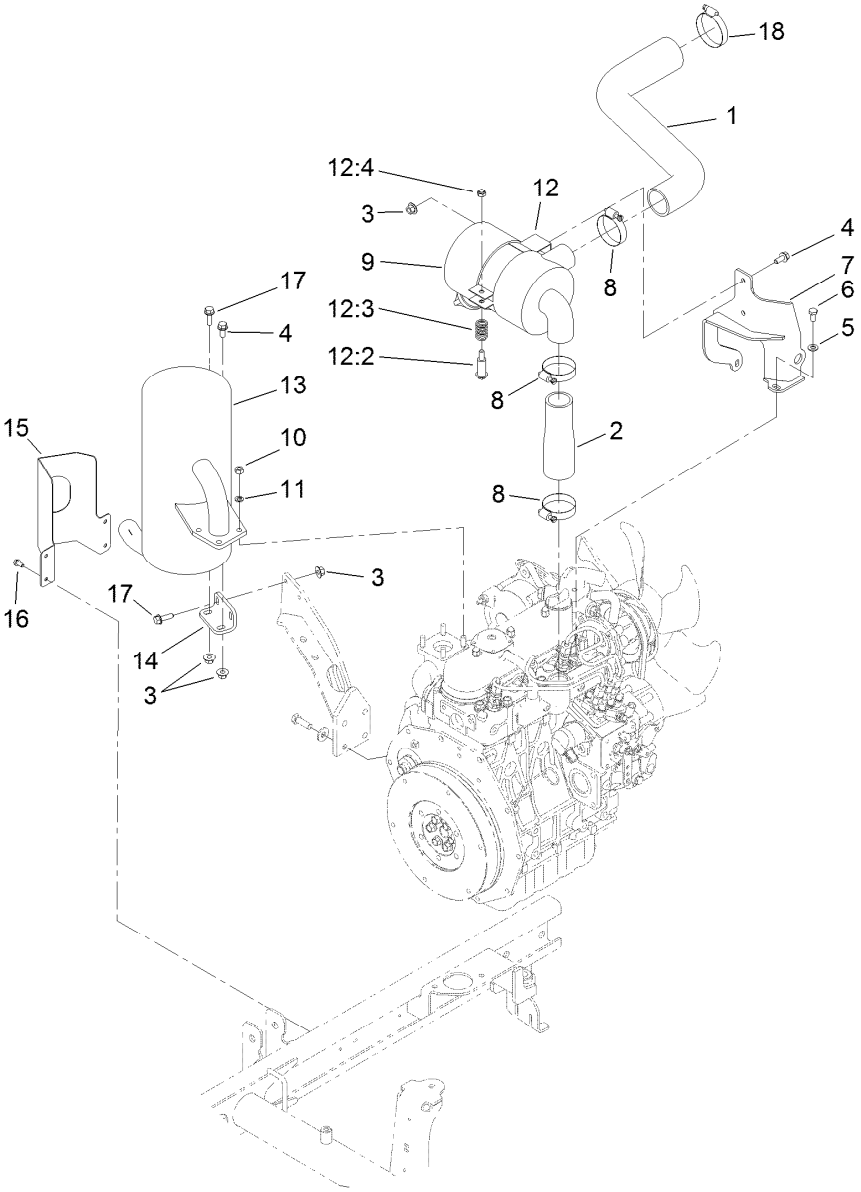

Air Cleaner and Exhaust Assembly

Ref.	Part Number	Qty.	Description
1	120-3354	1	Hose-Air Inlet, Upper
2	95-8947	1	Hose-Air Inlet, Lower
3	32128-44	6	Nut
4	3234-5	3	Screw-HHF
5	3256-23	2	Washer-Plain
6	33114-016	2	Screw-HH
7	99-3355-03	1	Bracket-Filter, Air
8	2412-92	3	Clamp-Hose
9	93-2190	1	Air Cleaner ASM
10	33014-00	4	Nut-Hex
11	3253-4	4	Washer-Lock

Ref.	Part Number	Qty.	Description
12	93-2191	1	Air Cleaner Mounting Band ASM
12:2	94-3653	1	Bolt
12:3	94-3654	1	Spring
12:4	48-9510	1	Nut
13	104-4834	1	Muffler
14	95-8943-03	1	Bracket-Muffler
15	99-3425-03	1	Guard-Exhaust
16	32144-4	4	Screw-HWH
17	3234-17	3	Screw-HHF
18	2412-130	1	Clamp-Hose

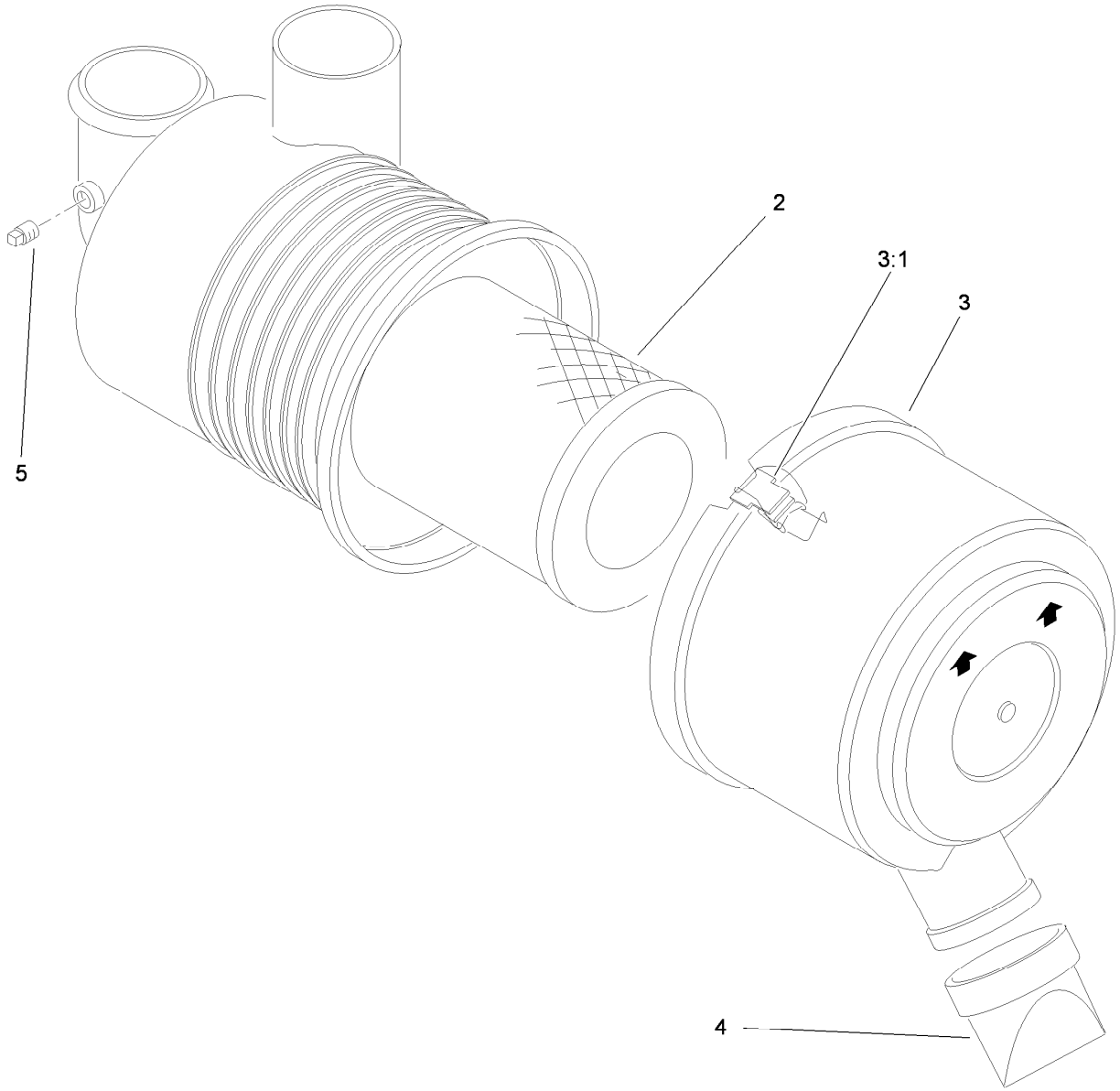

Air Cleaner Assembly No. 93-2190

Ref.	*Part Number*	*Qty.*	*Description*
2	108-3811	1	Filter-Air
3	94-3652	1	Cover ASM
3:1	1-643283	2	Latch-Cleaner, Air
4	87-9400	1	Valve-Vacuator
5	285-17	1	Plug-Pipe

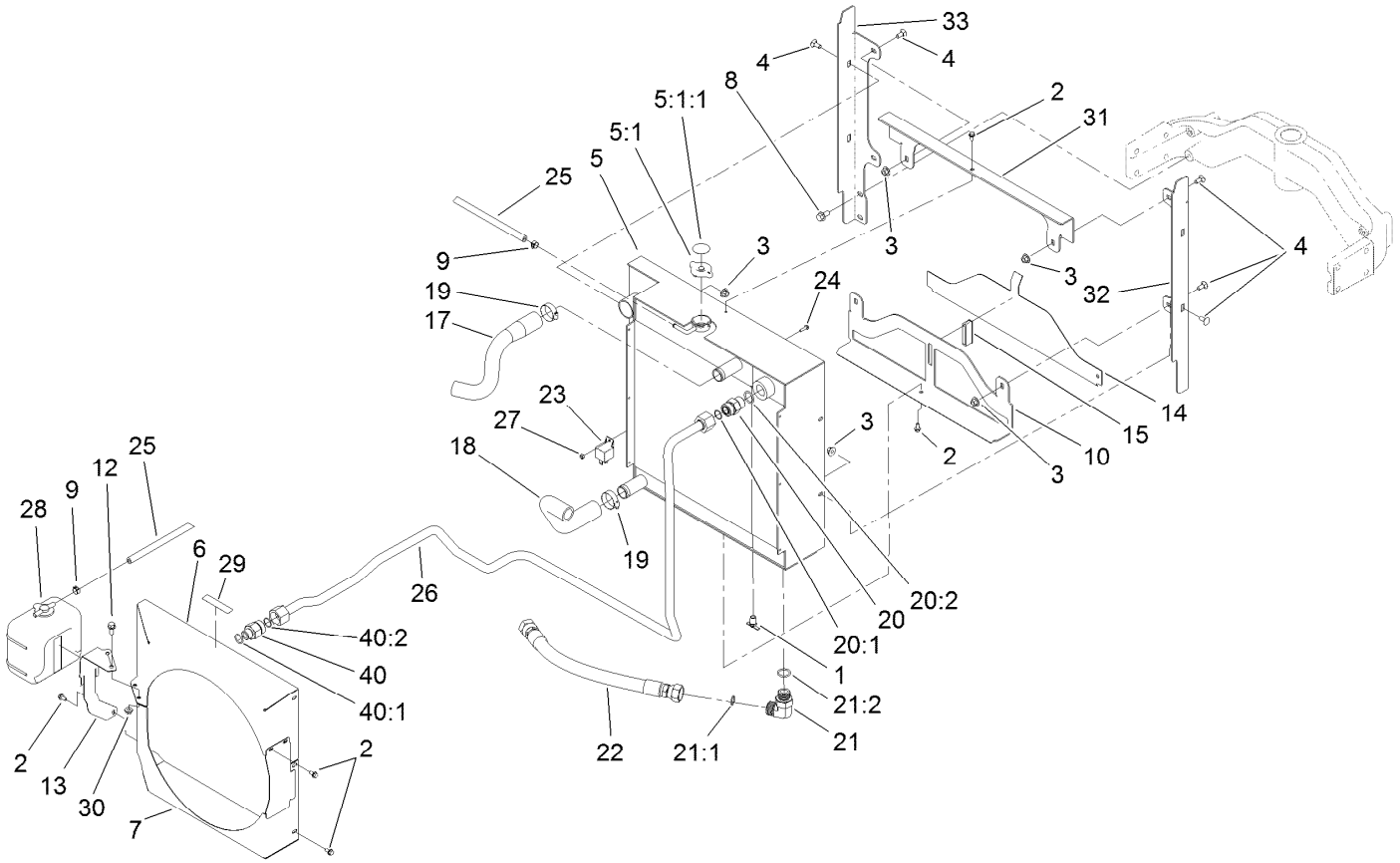

Radiator and Oil Cooler Assembly

Ref.	Part Number	Qty.	Description
1	304-46	1	Draincock
2	32104-116	10	Screw-HWHTF
3	32128-44	8	Nut
4	3230-1	8	Bolt-CARR
5	119-2028	1	Radiator And Oil Cooler ASM
5:1	115-7766	1	Cap-Radiator
5:1:1	106-6755	1	Decal-Cap, Radiator
6	121-3556-03	1	Shroud-Fan, Upper
7	121-3552-03	1	Shroud-Fan, Lower
8	3234-1	4	Screw-HHF
9	92-2379	2	Clamp-Hose
10	120-3530-03	1	Bracket-Radiator, Bottom
12	3234-5	2	Screw-HHF
13	121-3557-03	1	Bracket-Resevoir
14	95-8702-03	1	Shield-Radiator, Lower
15	99-3497	1	Magnet
17	121-3558	1	Hose-Radiator, Upper
18	120-3399	1	Hose-Radiator, Lower
19	2412-34	2	Clamp-Hose
20	340-9	1	Fitting-STR

Ref.	Part Number	Qty.	Description
20:1	237-58	1	O-Ring
20:2	237-81	1	O-Ring
21	340-142	1	Fitting-Elbow, 90 DEG
21:1	237-58	1	O-Ring
21:2	237-81	1	O-Ring
22	92-7536	1	Hose-HYD
23	99-7435	1	Relay
24	32105-13	1	Screw-HWH
25	109-0274	1	Hose-Fuel
26	121-3609	1	Tube-HYD
27	3296-2	1	Nut-Lock, NI
28	104-9318	1	Bottle-Overflow
29	93-6681	1	Decal-Warning, Fan
30	32128-20	2	Nut-HF
31	120-3529-03	1	Bracket-Radiator, Top
32	120-3531-03	1	Bracket-Radiator, LH
33	120-3532-03	1	Bracket-Radiator, RH
40	340-66	1	Fitting-Straight
40:1	237-80	1	O-Ring
40:2	237-58	1	O-Ring

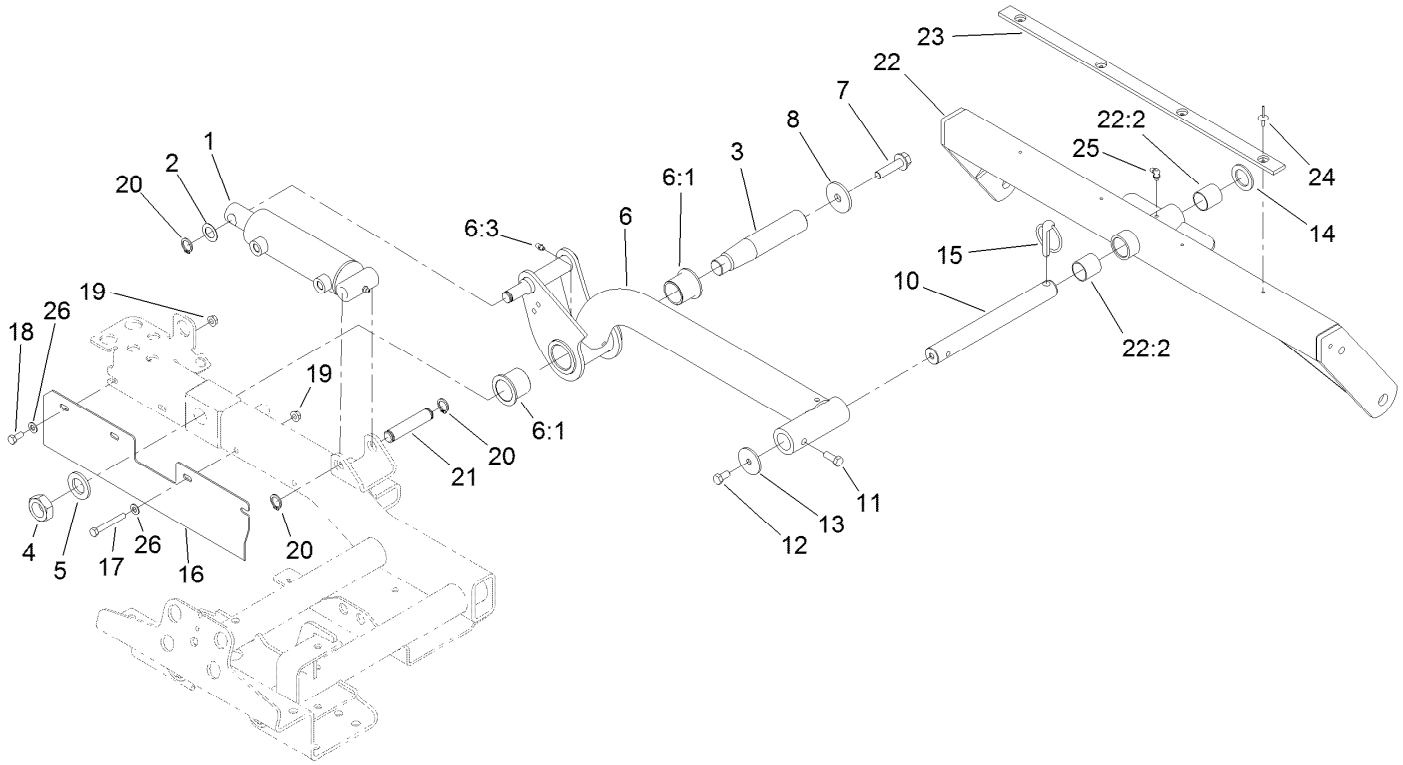

Rear Lift Arm and Carrier Frame Assembly

Ref.	Part Number	Qty.	Description
1	112-9916	1	HYD Cylinder ASM
2	3-6498	1	Washer-Thrust
3	95-8990	1	Shaft-Pivot, Rear
4	3220-9	1	Nut-Jam
5	86-1480	1	Washer
6	115-3473	1	Rear Liftarm ASM
6:1	69-6470	2	Bushing-Caster
6:3	302-5	1	Fitting-Grease
7	3234-27	1	Screw-HHF
8	75-7730	1	Washer-Thrust
10	100-4944	1	Shaft-Pivot, Cutting Unit
11	323-6	1	Screw-HH
12	323-4	1	Screw-HH
13	63-7400	1	Washer-Rebound

Ref.	Part Number	Qty.	Description
14	3-6781	1	Washer-Thrust
15	283-71	1	Pin-Lynch
16	121-3616-03	1	Guard
17	322-12	2	Screw-HH
18	322-3	2	Screw-HH
19	32128-20	4	Nut-HF
20	32120-93	3	Ring-Retaining
21	95-8575	1	Pin-Clevis
22	104-4229	1	Rear Carrier Frame ASM
22:2	108-4000	2	Bushing
23	95-8936	1	Strip-Wear
24	3269-18	4	Rivet-Blind
25	302-60	1	Fitting-Grease
26	3256-23	4	Washer-Plain

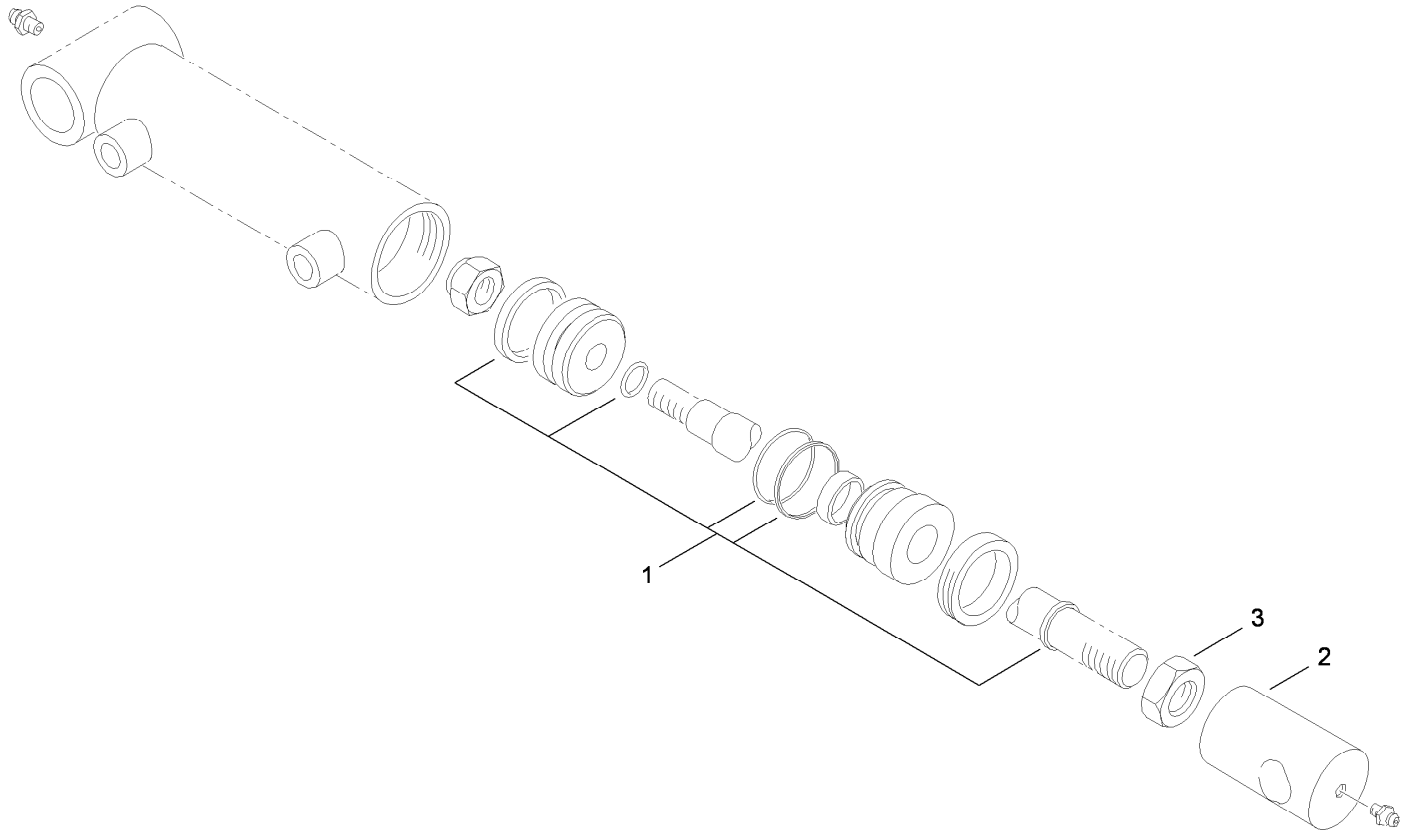

Hydraulic Cylinder Assembly No. 112-9916

Ref.	*Part Number*	*Qty.*	*Description*
1	115-3410	1	Seal Kit
2	108-9035	1	Clevis
3	3220-7	1	Nut-Jam

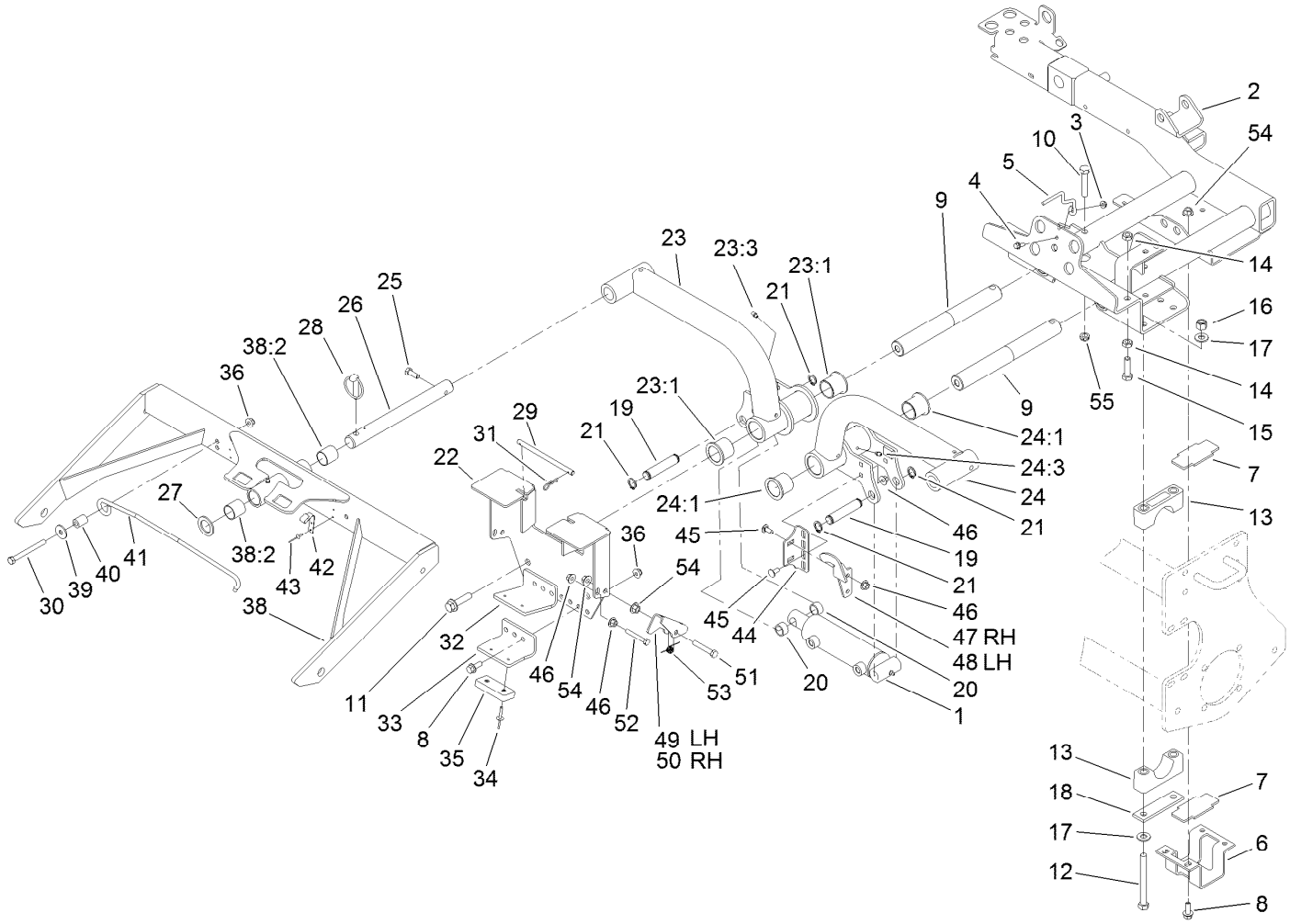

Sidewinder Carrier Assembly

Ref.	Part Number	Qty.	Description
1	112-9916	1	HYD Cylinder ASM
2	100-4939-03	1	Carrier-Sidewinder
3	32128-33	1	Nut-HF
4	3234-4	1	Screw-HHF
5	99-3433	1	Wire-Center
6	104-0416-03	1	Bracket-Slide
7	104-0417	2	Slide-Plastic
8	3234-11	8	Screw-HHF
9	95-8531	2	Shaft-Pivot, Liftarm
10	325-10	2	Screw-HH
11	3234-27	2	Screw-HHF
12	325-19	8	Screw-HH
13	104-4865	8	Cap-Bearing
14	3218-5	4	Nut-Jam
15	325-7	2	Screw-HH
16	3296-23	8	Nut-Lock, NI
17	87-7270	16	Washer-Thrust
18	99-3373	4	Bar-Support, Slide
19	95-8575	2	Pin-Clevis
20	75-9590	2	Spacer-Cylinder
21	32120-93	4	Ring-Retaining

Ref.	Part Number	Qty.	Description
22	104-4820-03	1	Bracket-Stop, Carrier
23	115-3462	1	RH Liftarm ASM
23:1	69-6470	2	Bushing-Caster
23:3	302-5	1	Fitting-Grease
24	115-3461	1	LH Liftarm ASM
24:1	69-6470	2	Bushing-Caster
24:3	302-5	1	Fitting-Grease
25	323-6	2	Screw-HH
26	105-7560	2	Shaft-Cu Pivot
27	3-6781	2	Washer-Thrust
28	283-71	2	Pin-Lynch
29	104-0472	1	Rod
30	323-42	2	Screw-HH
31	3290-467	2	Pin-Hair
32	110-8793-03	1	Stop-Deck, RH
33	110-8794-03	1	Stop-Deck, LH
34	3269-11	4	Rivet-Pop
35	86-5350	2	Bumper-Rubber
36	104-8301	6	Nut-HF, NI
38	110-8787	2	Front Carrier Frame ASM
38:2	108-4000	2	Bushing

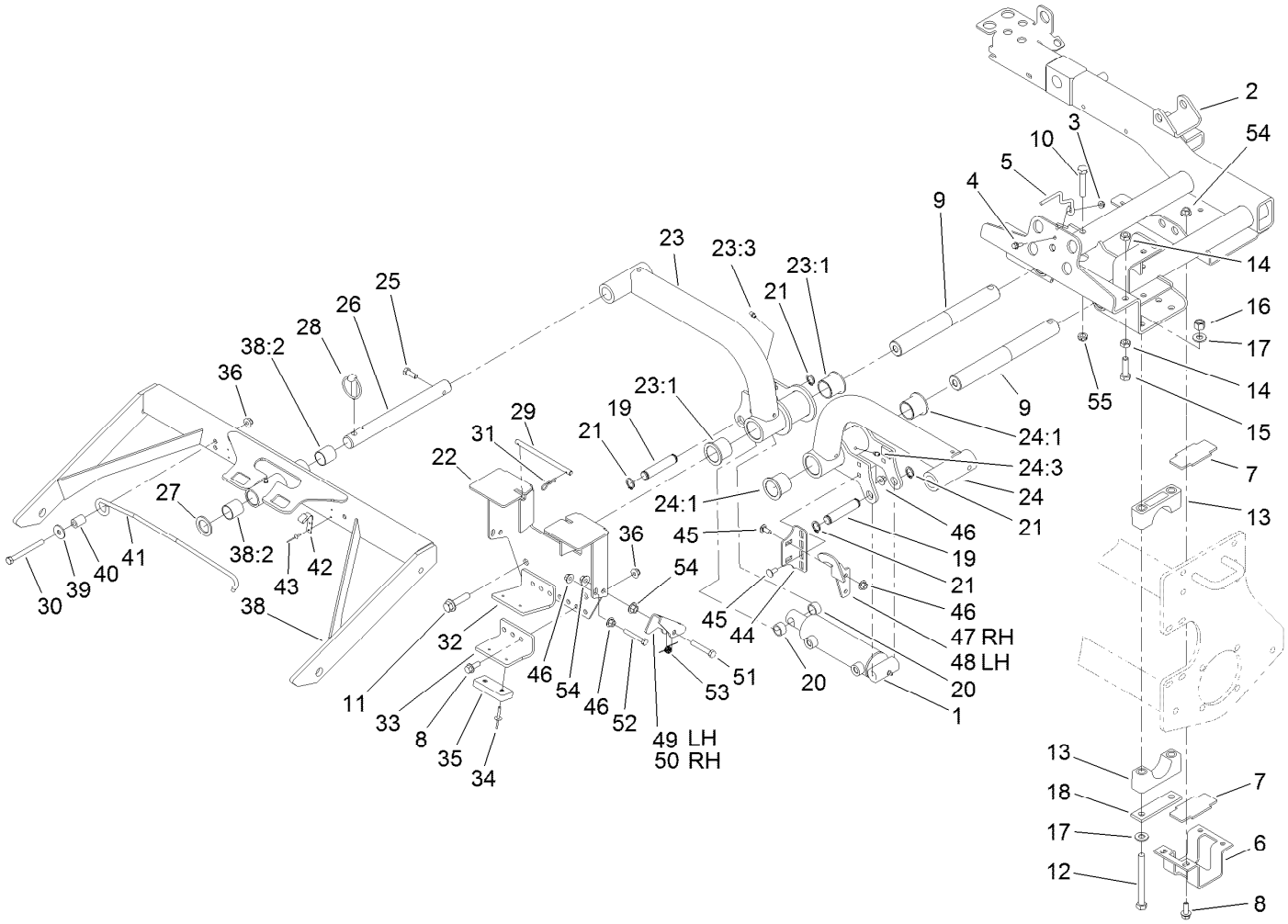

Sidewinder Carrier Assembly (continued)

Ref.	Part Number	Qty.	Description
39	93-8806	2	Washer-Hardened
40	104-4613	2	Tube-Latch
41	104-4612	2	Rod-Latch
42	104-4237	2	Clip-Rod
43	3290-271	4	Rivet-Pop
44	104-4828-03	2	Bracket-Actuator
45	3230-23	8	Bolt-CARR
46	32128-44	12	Nut
47	104-4826-03	1	Actuator-RH

Ref.	Part Number	Qty.	Description
48	104-4827-03	1	Actuator-LH
49	104-4819-03	1	Bracket-Pivot, LH
50	104-4825-03	1	Bracket-Pivot, RH
51	323-11	2	Screw-HH
52	322-11	2	Screw-HH
53	104-4821	2	Spring-Torsion
54	32128-43	8	Nut-Flange
55	3296-45	2	Nut-Hex

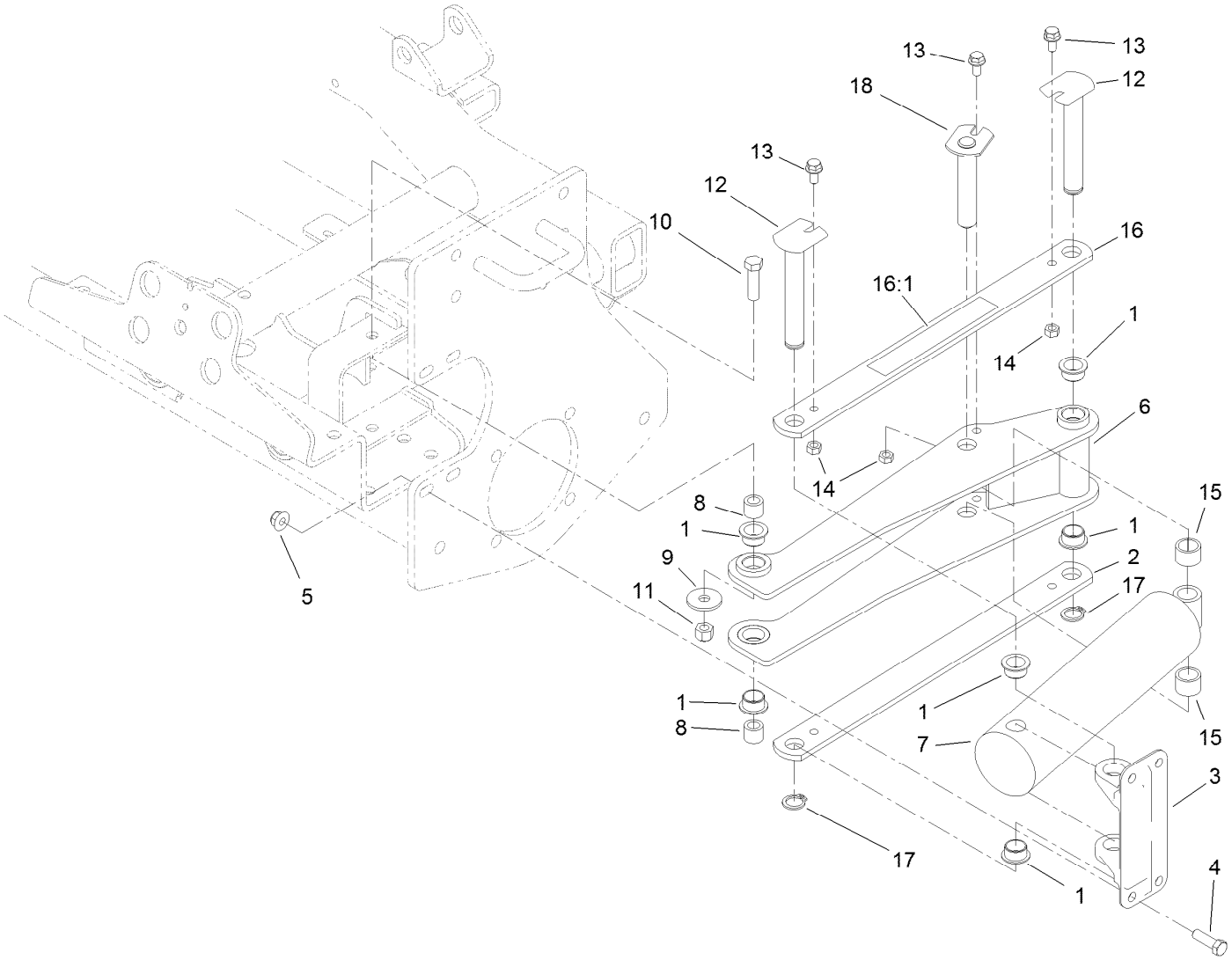

Scissor Frame and Link Assembly

Ref.	Part Number	Qty.	Description
1	95-8526	6	Bushing-Plastic
2	95-8527-03	1	Link-Scissor
3	95-8883	1	Mount-Scissor
4	323-7	4	Screw-HH
5	104-8301	4	Nut-HF, NI
6	95-8521-03	1	Frame-Scissor
7	95-8512	1	Cylinder-HYD
8	95-8603	2	Spacer
9	87-5330	2	Washer
10	324-6	2	Screw-HH

Ref.	Part Number	Qty.	Description
11	3296-48	2	Nut-Hex
12	125-1914	2	Pin-Pivot
13	3234-14	3	Screw-HHF
14	32152-1	3	Nut-Lock, Cone
15	46-6350	2	Spacer
16	99-3505	1	Scissors Link ASM
16:1	94-3353	1	Decal-Point, Pinch
17	32120-93	2	Ring-Retaining
18	120-3199	1	Pin-Pivot

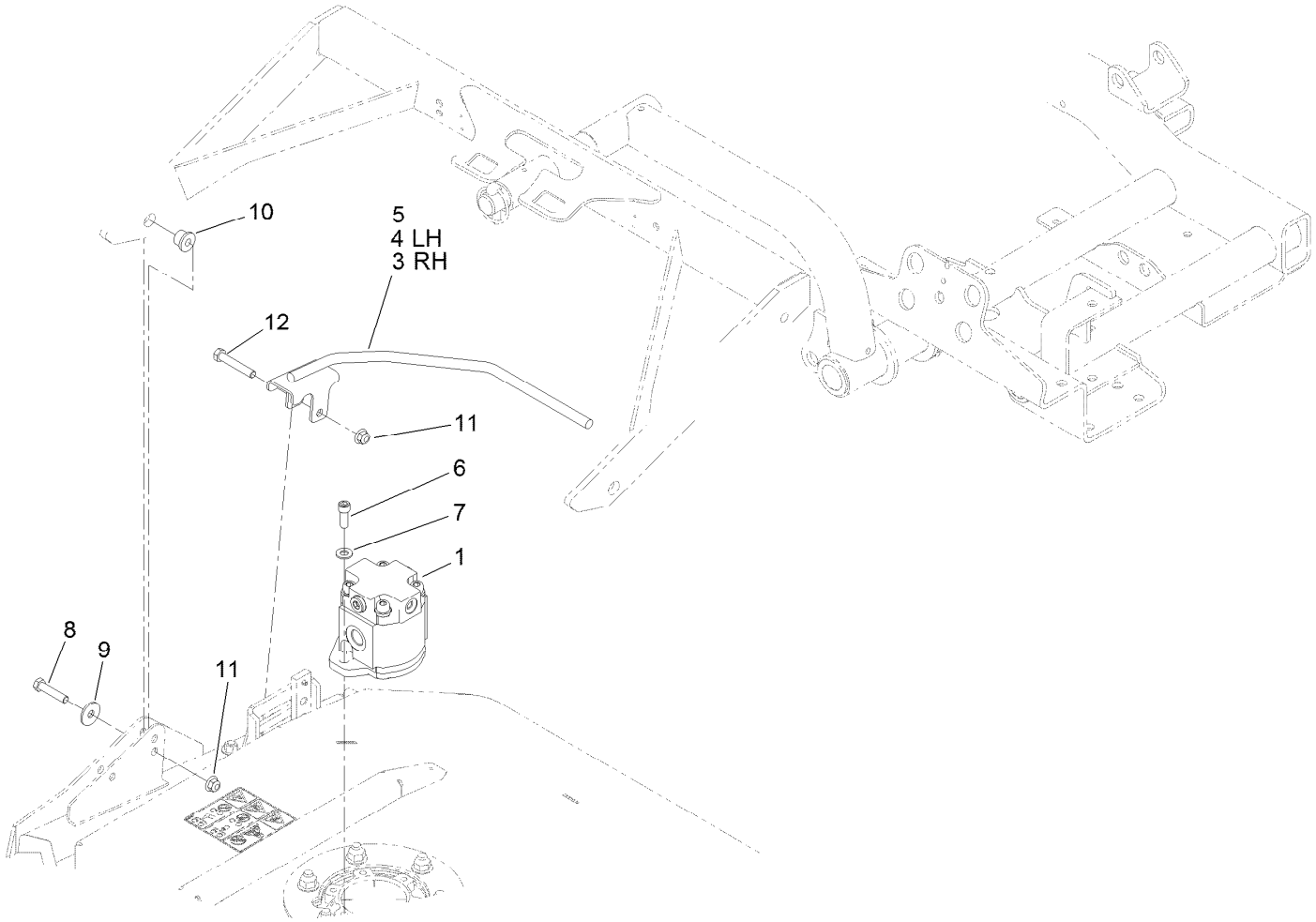

Hydraulic Motor and Foot Guard Assembly

Ref.	*Part Number*	*Qty.*	*Description*
1	117-5141	3	HYD Motor ASM
3	112-9901-03	1	Guard-Foot, RH
4	112-9902-03	1	Guard-Foot, LH
5	112-9900-03	1	Guard-Foot
6	3274-7	6	Screw-HSH
7	3256-24	6	Washer-Flat
8	323-52	6	Screw-HH
9	93-8806	6	Washer-Hardened
10	95-8803	6	Bushing-Flange
11	104-8301	10	Nut-HF, NI
12	323-11	4	Screw-HH

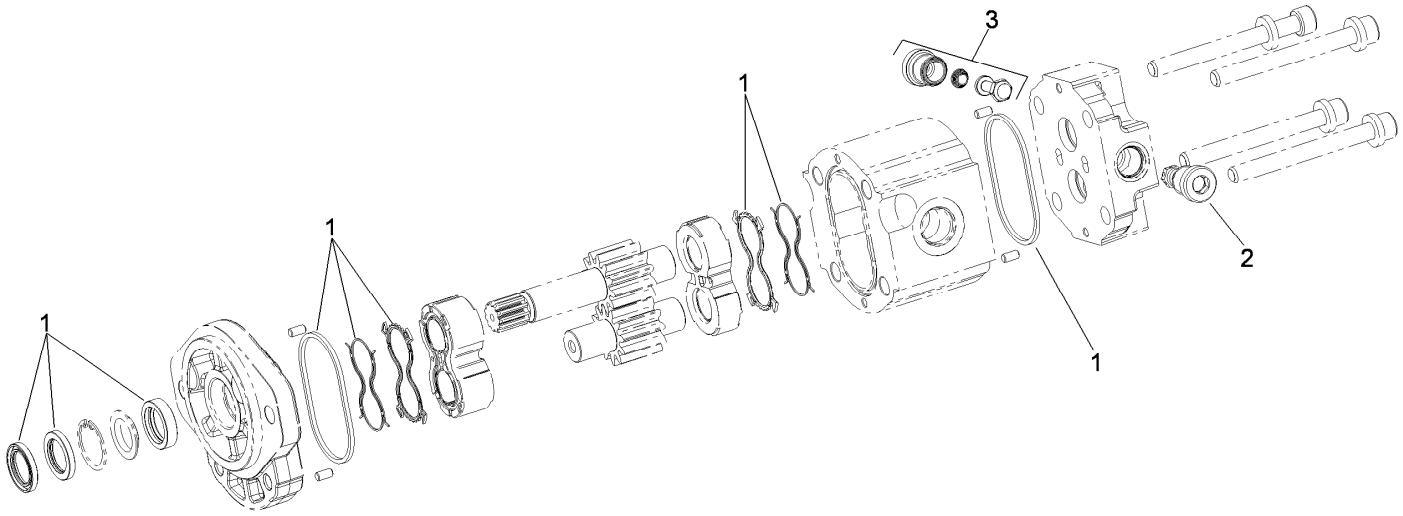

Gear Motor Assembly No. 117-5141

Ref.	*Part Number*	*Qty.*	*Description*
1	117-0235	1	Seal Kit
2	107-7820	1	Valve-Relief
3	107-7821	1	Valve-Anticavitation

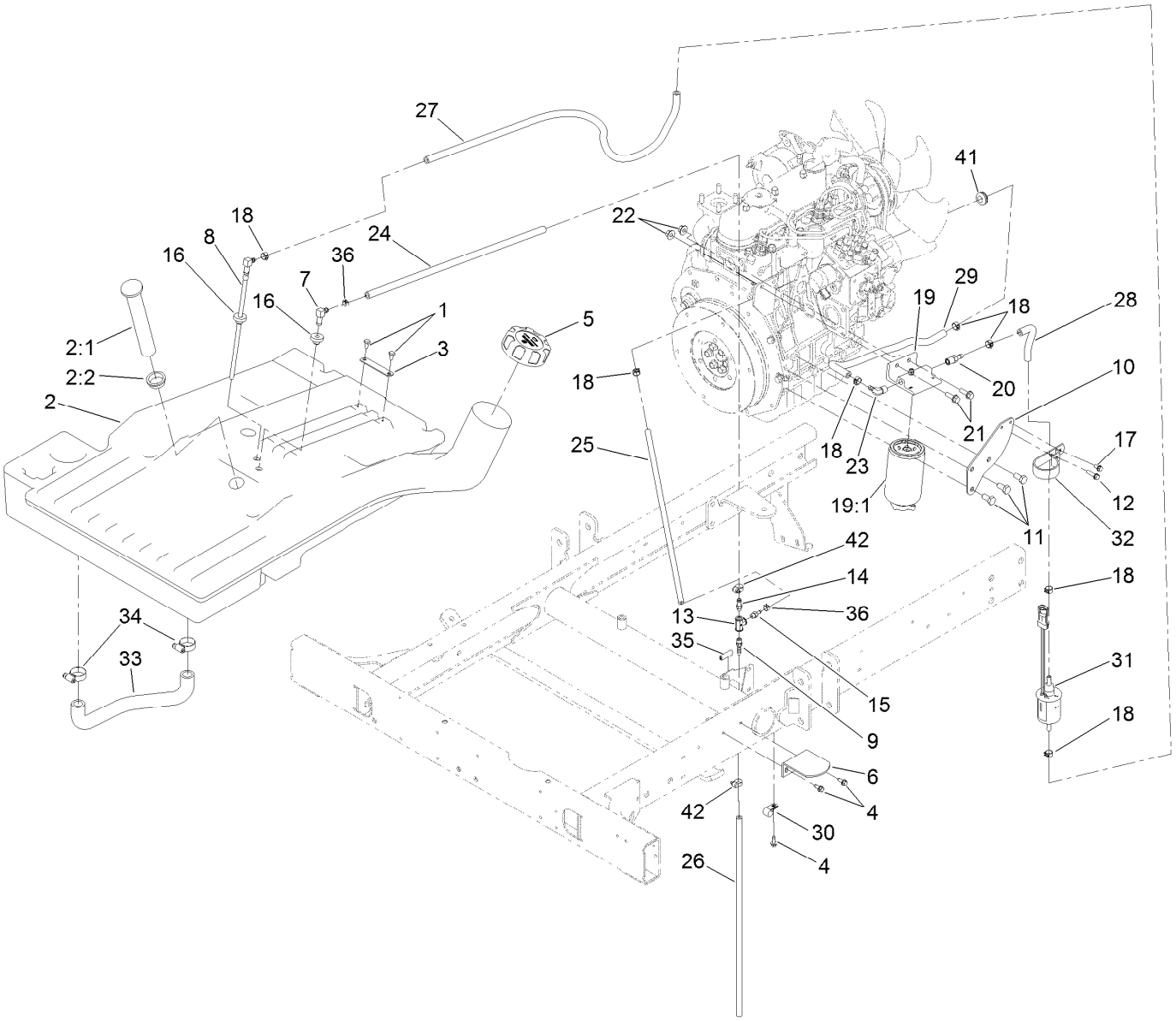

Fuel Tank Assembly

Ref.	Part Number	Qty.	Description
1	321-2	2	Screw-HH
2	105-7865	1	Tank-Fuel
2:1	95-8971	1	Gauge-Fuel
2:2	95-8972	1	Grommet
3	95-8881	1	Strap-Line, Fuel
4	32144-10	3	Screw-HWH
5	114-5064	1	Cap-Diesel
6	95-8968-03	1	Support-Tank, Fuel
7	46-6550	1	Fitting-Elbow, 90 DEG
8	110-9689	1	Pipe-Stand
9	304-73	1	Fitting-Straight
10	120-2182-03	1	Plate-Mount, Fuel Pump
11	63-7790	3	Screw-Cap
12	32144-86	1	Screw-HWHTF
13	354-20	1	Fitting-Tee
14	354-21	1	Fitting-Barbed
15	354-22	1	Fitting-Barbed
16	46-6560	2	Bushing
17	32144-4	1	Screw-HWH
18	92-2379	7	Clamp-Hose
19	110-9044	1	Separator-Filter

Ref.	Part Number	Qty.	Description
19:1	110-9049	1	Filter-Spin On, Fuel/Water
20	353-783	1	Fitting-STR
21	3234-17	2	Screw-HHF
22	32128-44	2	Nut
23	353-781	1	Fitting-HYD, 90
24	110-6187	1	Hose-Fuel
25	110-8751	1	Hose-Fuel
26	110-5701	1	Hose-Fuel
27	121-7914	1	Hose-Fuel
28	117-4026	1	Hose-Fuel
29	121-7852	1	Hose-Fuel
30	2412-73	1	Clamp-R
31	110-8806	1	Pump-Fuel
32	110-8817	1	Bracket-Pump, Fuel
33	105-4094	1	Hose-Formed
34	2412-129	2	Clamp-Hose
35	110-8754	1	Trim
36	2412-80	2	Clamp-Hose
41	1-543296	1	Grommet
42	2412-108	2	Clamp-Worm

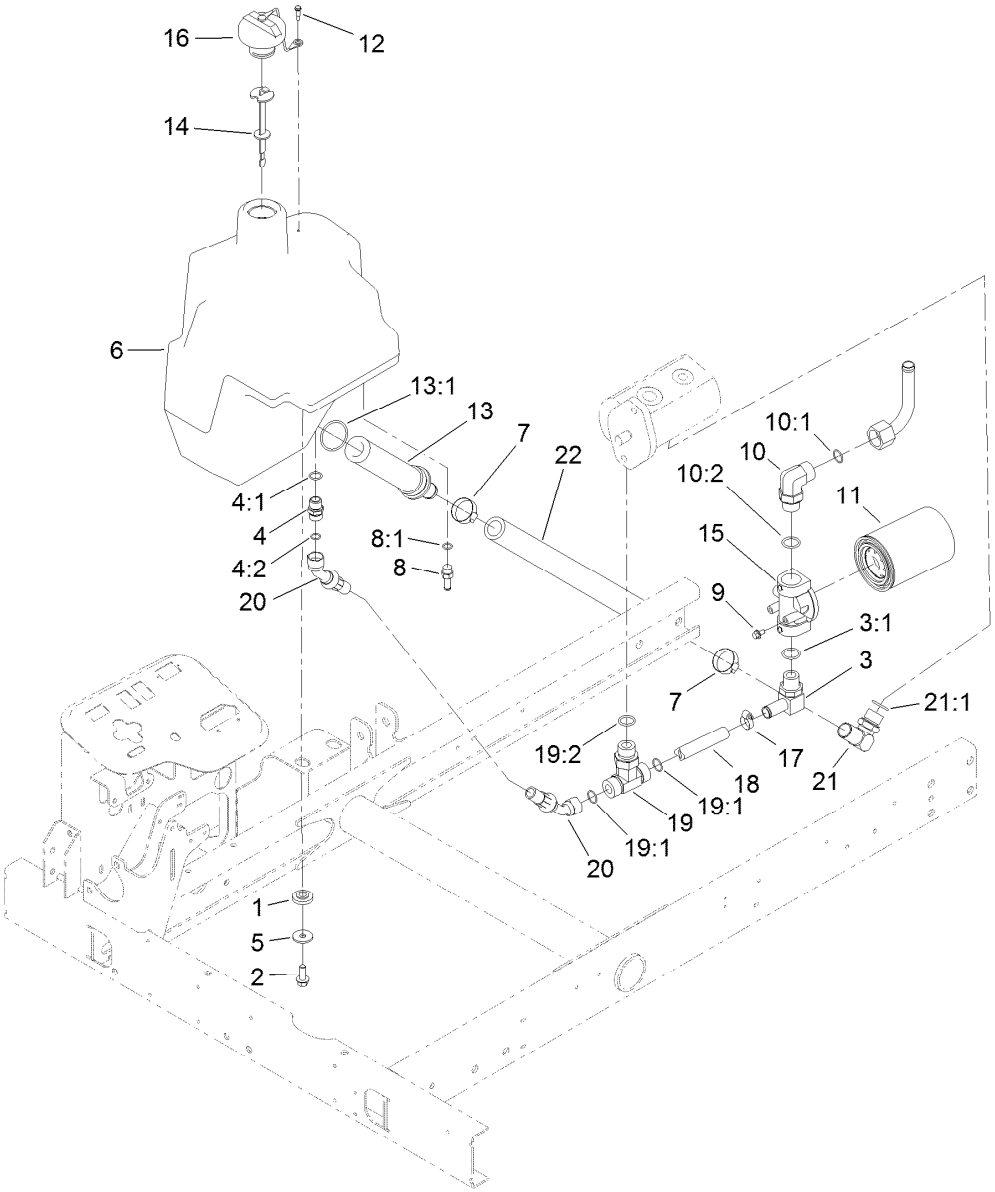

Hydraulic Tank and Filter Assembly

Ref.	Part Number	Qty.	Description
1	240-11	4	Bushing-Flange
2	3234-11	4	Screw-HHF
3	353-987	1	Fitting-Elbow, 90
3:1	237-81	1	O-Ring
4	100-4890	1	Fitting-Check
4:1	237-79	1	O-Ring
4:2	237-30	1	O-Ring
5	63-8410	4	Washer
6	104-4840	1	Tank-HYD
7	2412-34	2	Clamp-Hose
8	353-979	1	Fitting-STR
8:1	237-42	1	O-Ring
9	3234-13	2	Screw-HHF
10	340-142	1	Fitting-Elbow, 90 DEG
10:1	237-58	1	O-Ring
10:2	237-81	1	O-Ring

Ref.	Part Number	Qty.	Description
11	86-3010	1	Filter-Oil
12	57-5420	1	Screw-Shoulder
13	104-7546	1	Tank Strainer ASM
13:1	340-136	1	O-Ring
14	119-6968	1	Dipstick-Oil
15	92-5821	1	Head-Filter
16	93-7160	1	Cap-Oil, HYD
17	2412-36	2	Clamp-Hose
18	104-0486	1	Hose-HYD
19	104-4836	1	Fitting-Tee
19:1	237-58	2	O-Ring
19:2	237-81	1	O-Ring
20	104-0487	1	Hose-HYD
21	95-3502	1	Fitting-Elbow 90
21:1	237-81	1	O-Ring
22	104-5486	1	Hose

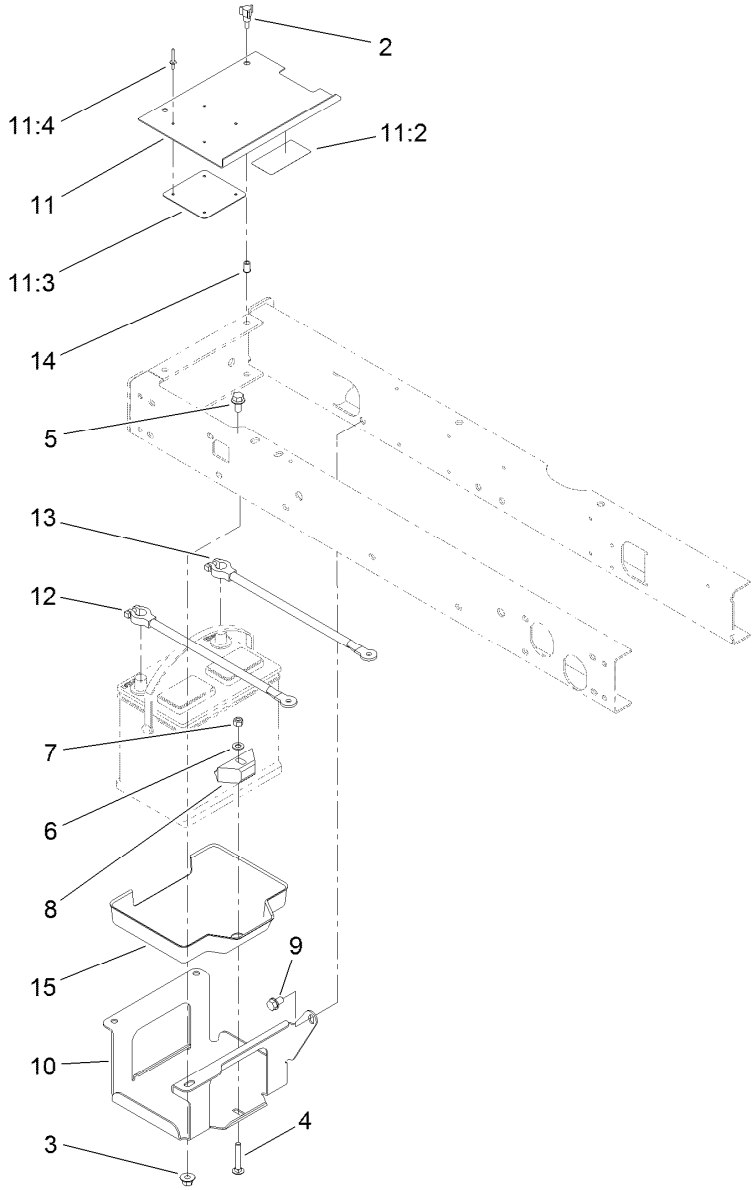

Battery Assembly

Ref.	Part Number	Qty.	Description
2	233-70	2	Knob-Star, Three
3	32128-43	3	Nut-Flange
4	3230-6	1	Bolt-CARR
5	3234-1	3	Screw-HHF
6	3256-23	1	Washer-Plain
7	3296-29	1	Nut-Lock, NI
8	66-2490	1	Retainer-Battery
9	32144-15	1	Screw-HHFTF
10	95-8796-03	1	Support-Battery

Ref.	Part Number	Qty.	Description
11	99-3602	1	Battery Cover ASM
11:2	93-7276	1	Decal-Danger
11:3	87-7620	1	Shield-Terminal, Battery
11:4	3269-27	4	Rivet-Snap
12	95-8853	1	Cable-Battery, Positive
13	95-8854	1	Cable-Battery, Negative
14	32148-6	2	Nut-Clinch
15	99-3513	1	Tray-Battery

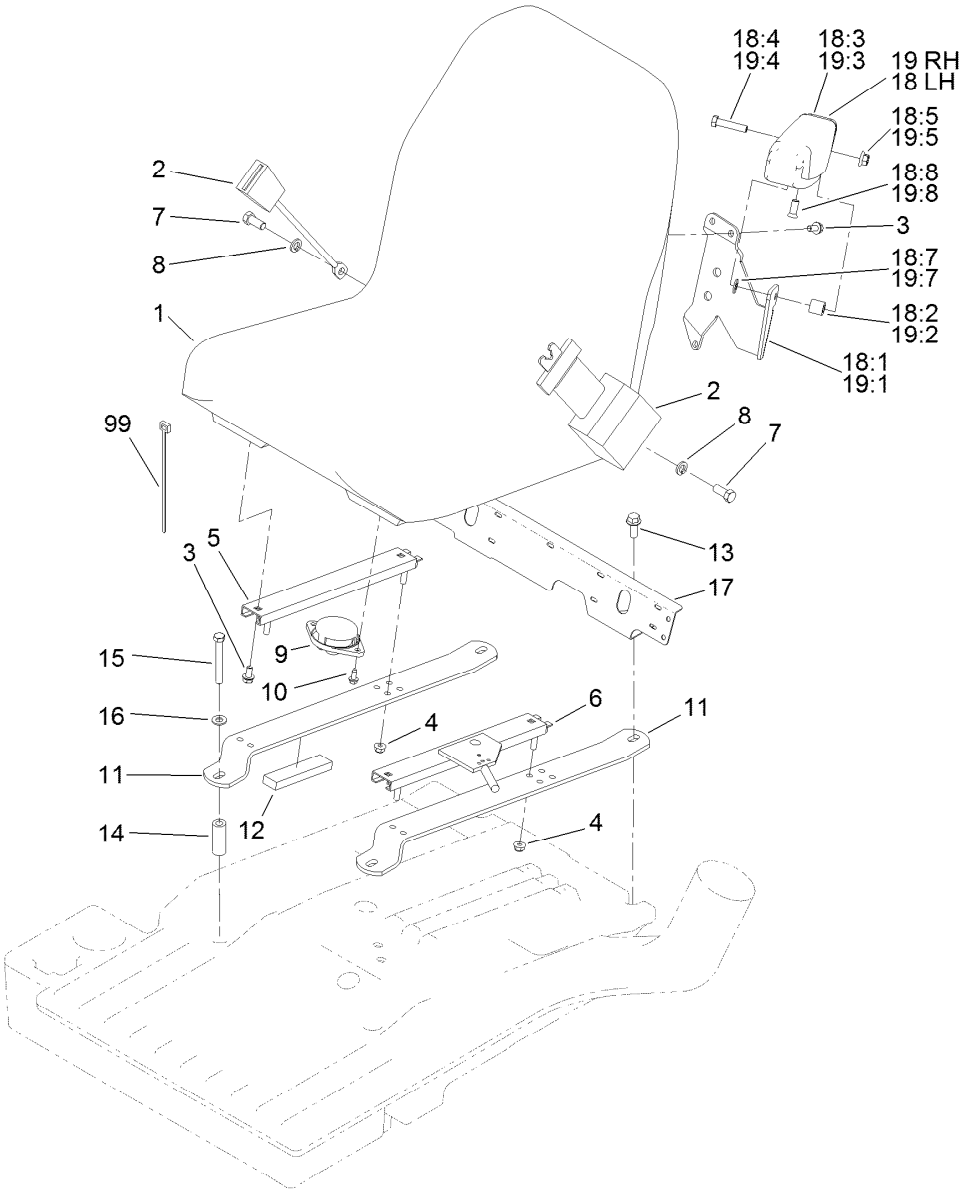

Seat Assembly

Ref.	Part Number	Qty.	Description
1	104-4620	1	Seat
2	100-4928	1	Belt-Seat
3	3234-14	10	Screw-HHF
4	104-8300	4	Nut-HF, NI
5	92-8990	1	Adjuster-Seat, Non-Locking
6	92-8991	1	Adjuster (W/Latch)
7	3212-4	2	Screw-HH
8	3253-6	2	Washer-Lock
9	92-6282	1	Switch-Seat
10	32144-10	2	Screw-HWH
11	104-0467-03	2	Strap-Support, Seat
12	95-8896	2	Foam
13	3234-11	2	Screw-HHF
14	104-0466	2	Spacer
15	323-14	2	Screw-HH
16	3256-24	2	Washer-Flat
17	121-3644-03	1	Shield-Heat

Ref.	Part Number	Qty.	Description
18	92-7307	1	LH Armrest ASM
18:1	69-0760	1	Bracket-Arm, LH
18:2	92-7301	1	Spacer
18:3	69-1180	1	Armrest
18:4	323-9	1	Screw-HH
18:5	32128-19	1	Nut-HF Lock,Large Flg
18:7	3256-24	1	Washer-Flat
18:8	92-7318	1	Screw
19	92-7306	1	RH Armrest ASM
19:1	69-0770	1	Bracket-Arm, RH
19:2	92-7301	1	Spacer
19:3	69-1180	1	Armrest
19:4	323-9	1	Screw-HH
19:5	32128-19	1	Nut-HF Lock,Large Flg
19:7	3256-24	1	Washer-Flat
19:8	92-7318	1	Screw
99	3290-378	1	Tie-Cable

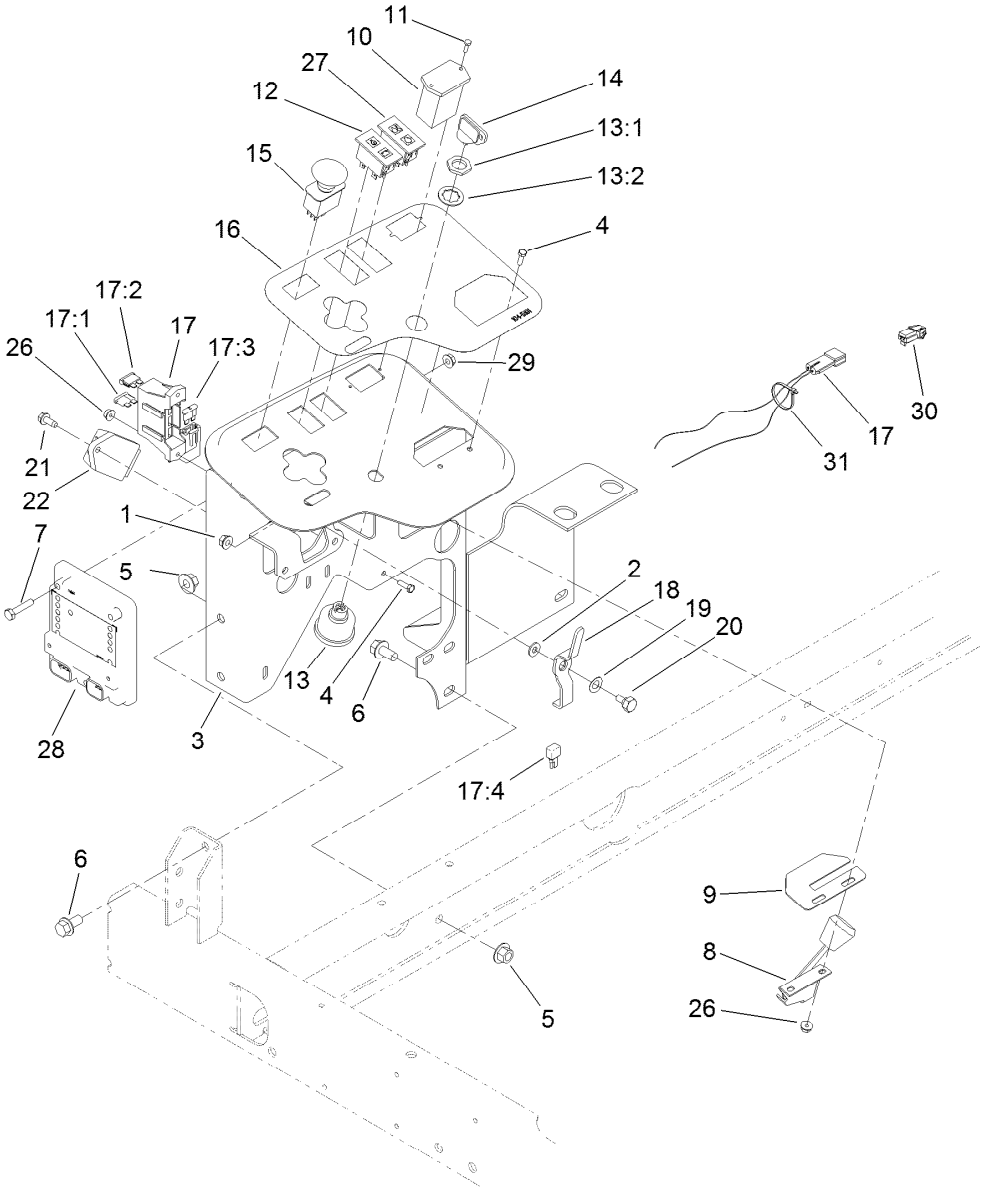

Control Panel Assembly

Ref.	Part Number	Qty.	Description
1	32128-32	1	Nut-HHF
2	3256-22	1	Washer-Flat
3	115-3496-03	1	Panel-Control
4	32105-13	2	Screw-HWH
5	32128-43	5	Nut-Flange
6	3234-1	5	Screw-HHF
7	321-8	3	Screw-HH
8	110-8795	1	Cable-Throttle
9	104-0421	1	Plate-Stop, Throttle
10	75-6820	1	Hourmeter
11	32144-18	2	Screw-HWH
12	100-8070	1	Lamp-Warning
13	104-2541	1	Ignition Switch ASM
13:1	218-461	1	Nut-HH
13:2	3254-5	1	Washer-Lock
14	63-8360	1	Key-Ignition
15	93-9999	1	Switch-PTO

Ref.	Part Number	Qty.	Description
16	121-3620	1	Decal-Console
17	122-0258	1	Harness-Wire
17:1	218-578	1	Fuse-Blade, 10 Amp
17:2	109355	1	Fuse-Blade, 15 Amp
17:3	94-6710	1	Fuse-2 Amp
17:4	100-4918	1	Diode
18	99-3401	1	Lever-Lock
19	3290-477	1	Washer-Curved
20	63-3410	1	Screw-Shoulder
21	32144-10	1	Screw-HWH
22	98-7611	1	Controller-Glow
26	3290-148	4	Nut-HF
27	100-8071	1	Lamp-Warning
28	106-9277	1	Module-Control, Standard
29	32128-33	3	Nut-HF
30	104-4875	1	Harness-Wire, Jumper
31	3290-379	1	Tie-Cable

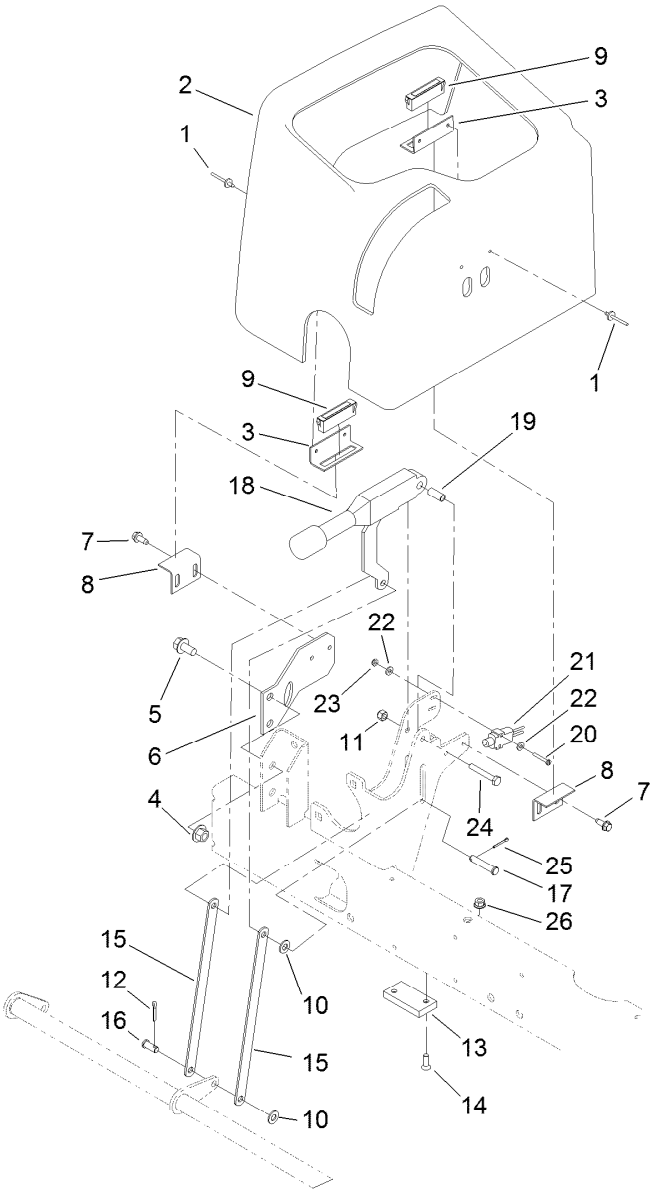

Parking Brake and Dash Cover Assembly

Ref.	Part Number	Qty.	Description
1	3269-5	4	Rivet-Pop
2	95-8707	1	Cover-Dash
3	95-8763	2	Bracket-Hold Down, Cover
4	32128-43	2	Nut-Flange
5	3234-1	2	Screw-HHF
6	95-8764-03	1	Support-Magnet
7	32144-10	4	Screw-HWH
8	95-8765	2	Bracket-Strike, Magnet
9	58-4250	2	Catch-Magnetic
10	3256-23	2	Washer-Plain
11	3296-42	1	Nut-Lock, NI
12	3272-10	1	Pin-Cotter
13	95-8684	1	Pad-Bumper

Ref.	Part Number	Qty.	Description
14	3289-4	2	Screw-FH
15	104-4628	2	Link-Brake, Parking
16	283-62	1	Pin-Clevis
17	94-3829	1	Pin-Clevis
18	104-4817	1	Lever-Brake
19	87-4710	1	Spacer-Brake, Parking
20	32105-9	2	Screw
21	95-8900	1	Switch
22	3256-21	4	Washer-Flat
23	3296-9	2	Nut-Hex
24	321-10	1	Screw-HH
25	3272-6	1	Pin-Cotter
26	104-7201	2	Nut-HF, NI

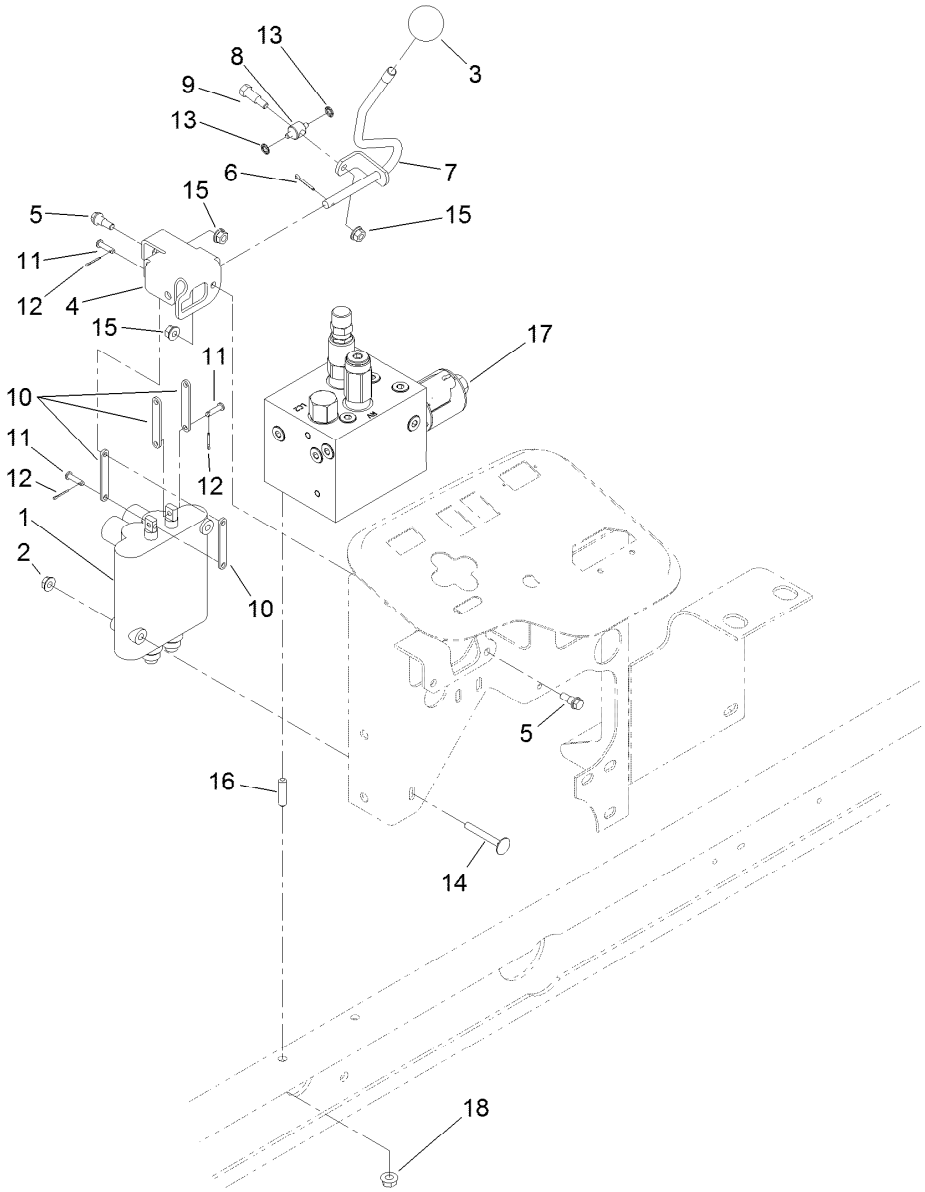

2-Spool Control Valve Assembly

Ref.	Part Number	Qty.	Description
1	95-8581	1	2-Spool Control Valve ASM
2	32128-33	2	Nut-HF
3	233-42	1	Knob
4	95-8633	1	Bracket-Valve, Actuator
5	42-3560	2	Bolt-Shoulder
6	3272-6	1	Pin-Cotter
7	95-8635	1	Lever-Valve
8	95-8638	1	Trunnion-Valve, Actuator
9	92-8916	1	Bolt-Shoulder

Ref.	Part Number	Qty.	Description
10	95-8634	4	Link
11	283-16	3	Pin-Clevis
12	3272-1	3	Pin-Cotter
13	32151-106	2	Ring-Retaining
14	3230-33	2	Screw-CARR
15	32128-32	3	Nut-HHF
16	104-0430	2	Stud
17	121-3570	1	Manifold ASM
18	104-8300	2	Nut-HF, NI

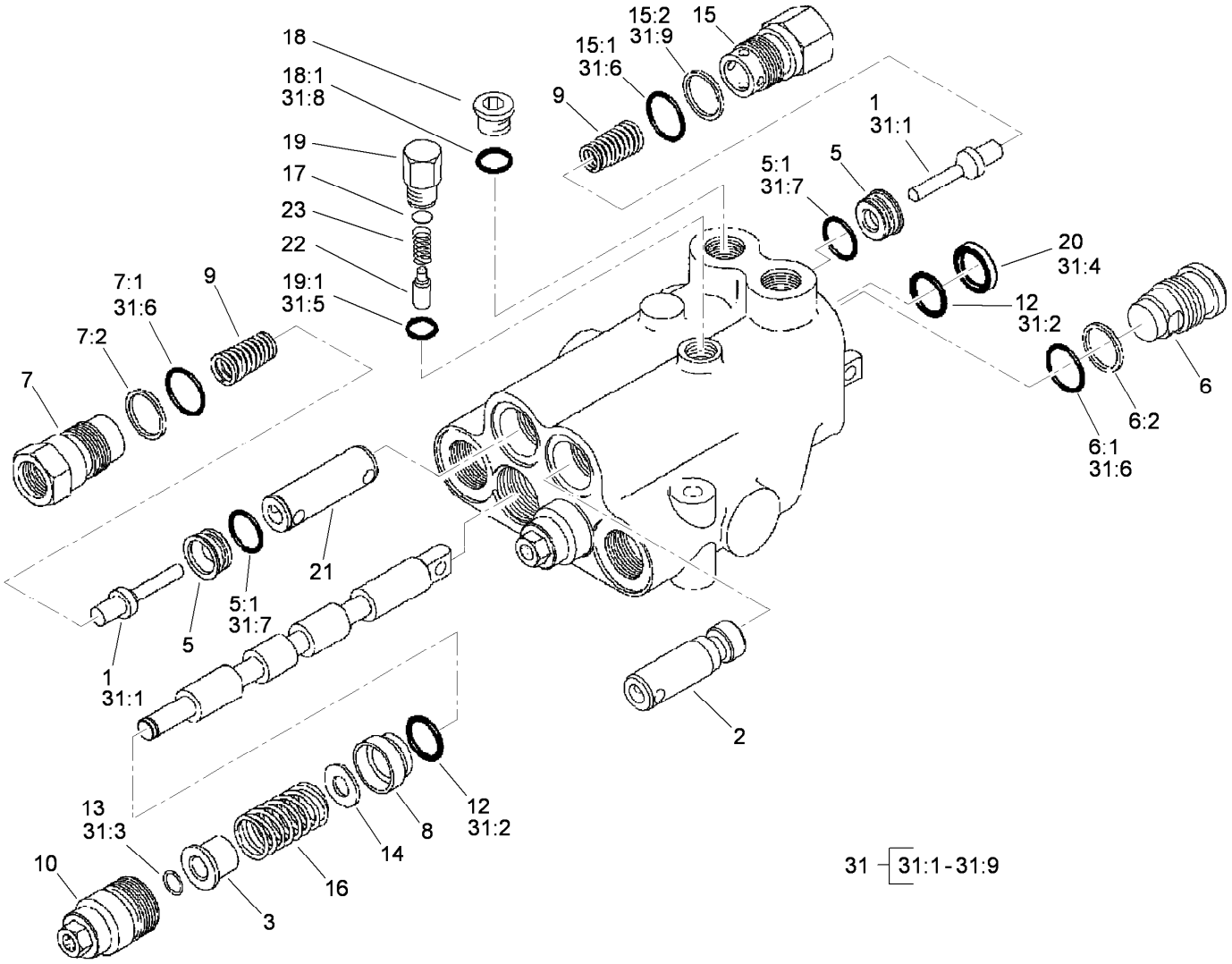

2-Spool Control Valve Assembly No. 95-8581

Ref.	Part Number	Qty.	Description
1	58-6290	3	Poppet
2	69-1840	1	Plunger
3	58-6310	2	Spacer
5	58-6330	3	Seat
5:1	58-6340	1	O-Ring
6	58-6350	1	Plug
6:1	60-5720	1	O-Ring
6:2	58-6370	1	Washer
7	69-1800	2	Plug ASM
7:1	60-5720	1	O-Ring
7:2	58-6370	1	Washer
8	58-6400	2	Bushing
9	69-1810	3	Spring
10	58-6420	2	Cap
12	58-6450	4	O-Ring
13	58-6460	2	Ring-Retaining
14	65-2770	2	Washer
15	99-3526	1	Plug ASM
15:1	60-5720	1	O-Ring
15:2	59-7730	1	Washer-Backup

Ref.	Part Number	Qty.	Description
16	99-3531	2	Spring
17	60-6450	1	Disc
18	353-989	1	Plug-Hex, Hollow
18:1	237-42	1	O-Ring
19	58-6780	1	Plug
19:1	58-6790	1	O-Ring
20	58-6320	2	Wiper
21	99-3528	1	Plunger
22	58-6770	1	Plunger
23	58-6760	1	Spring
31	99-3530	1	Seal Kit
31:1	58-6290	3	Poppet
31:2	58-6450	4	O-Ring
31:3	58-6460	2	Ring-Retaining
31:4	58-6320	2	Wiper
31:5	58-6790	1	O-Ring
31:6	60-5720	4	O-Ring
31:7	58-6340	2	O-Ring
31:8	237-42	1	O-Ring
31:9	59-7730	2	Washer-Backup

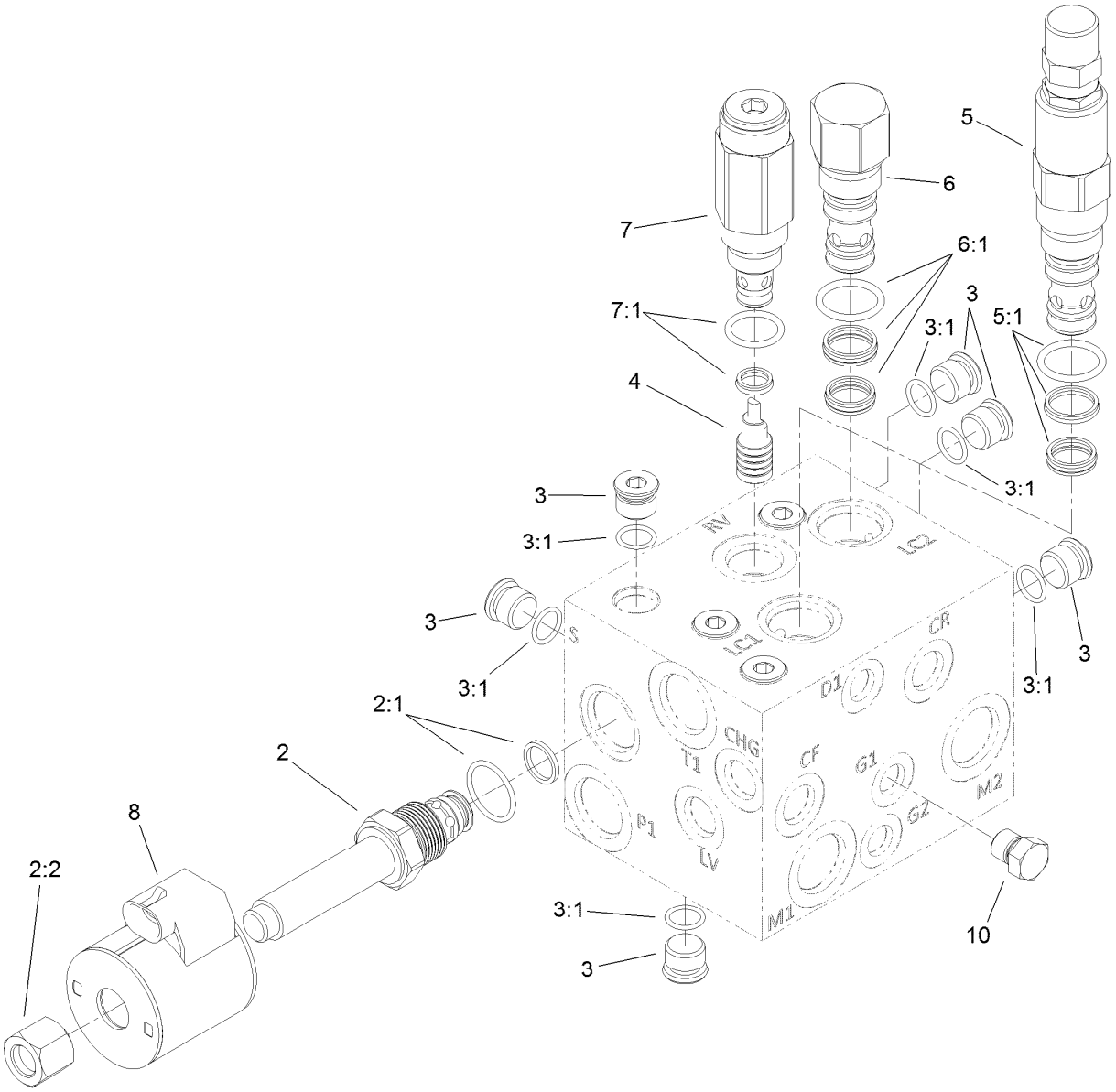

Hydraulic Manifold Assembly No. 121-3570

Ref.	*Part Number*	*Qty.*	*Description*
2	110-8768	1	Valve-Relief, Solenoid (3000 PSI)
2:1	110-6316	1	Seal Kit
2:2	130-8180	1	Nut-Coil
3	353-512	9	Plug
3:1	237-78	1	O-Ring
4	105-9157	1	Piston-Pilot
5	119-2011	1	Valve-Logic, Adjustable
5:1	119-2159	1	Seal Kit
6	105-9153	1	Element-Logic, Vented
6:1	119-2159	1	Seal Kit
7	112-5259	1	Valve-Relief
7:1	105-9156	1	Seal Kit
8	110-6344	1	Coil-12V, DC
10	117-0115	1	Plug

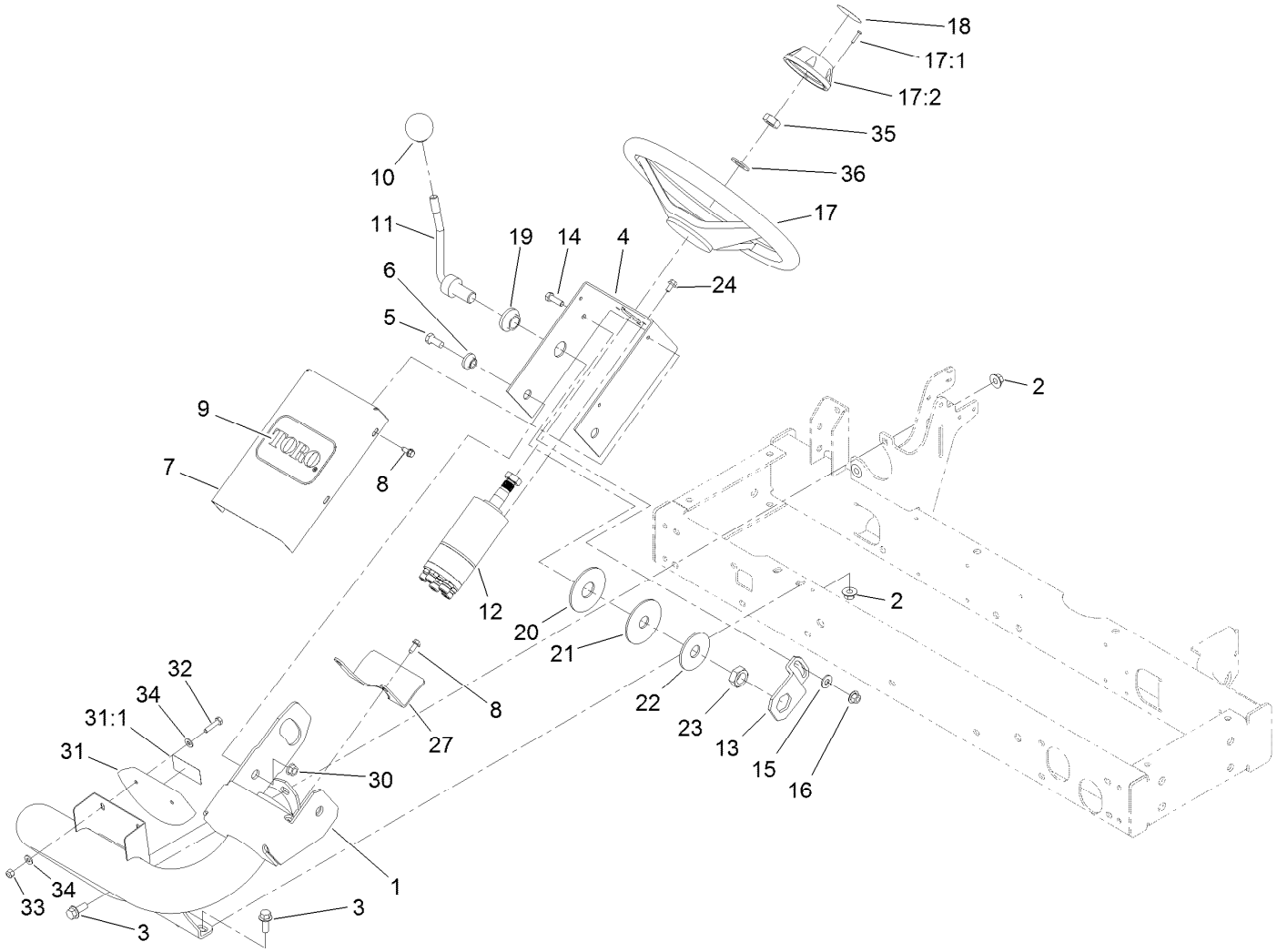

Steering Arm Assembly

Ref.	Part Number	Qty.	Description
1	105-8536-01	1	Arm-Steering
2	32128-43	4	Nut-Flange
3	3234-11	4	Screw-HHF
4	104-5185-01	1	Bracket-Valve, Steering
5	323-5	2	Screw-HH
6	93-5988	2	Hub-Pivot
7	95-8794-01	1	Cover-Valve, Steering
8	32144-10	5	Screw-HWH
9	67-1300	1	Decal
10	233-48	1	Knob
11	95-8798-03	1	Lever-Steering
12	121-7856	1	Steering Valve ASM
13	80-2880	1	Bracket-Tilt
14	322-5	1	Screw-HH
15	3256-3	1	Washer-Flat
16	32128-44	1	Nut
17	75-0560	1	Steering Wheel ASM
17:1	32144-21	1	Screw

Ref.	Part Number	Qty.	Description
17:2	68-5140	1	Cap-Wheel, Steering
18	68-5370	1	Decal
19	99-3502	1	Boss
20	31-0390	1	Disc-Friction
21	82-9010	1	Disc-Friction
22	80-2930	1	Washer-Flat
23	3218-7	1	Nut-Jam
24	33103-012	4	Screw-HHF
27	99-3405-01	1	Shield-Steering
30	32128-21	2	Nut-HF Lock
31	100-4929	1	Slope Indicator ASM
31:1	121-3628	1	Decal-Angle
31:1	121-3598	1	Decal-Danger, 17 Degree
32	321-7	2	Screw-HH
33	3296-42	2	Nut-Lock, NI
34	3256-22	4	Washer-Flat
35	3296-33	1	Nut-Lock, NI
36	3256-27	1	Washer-Flat

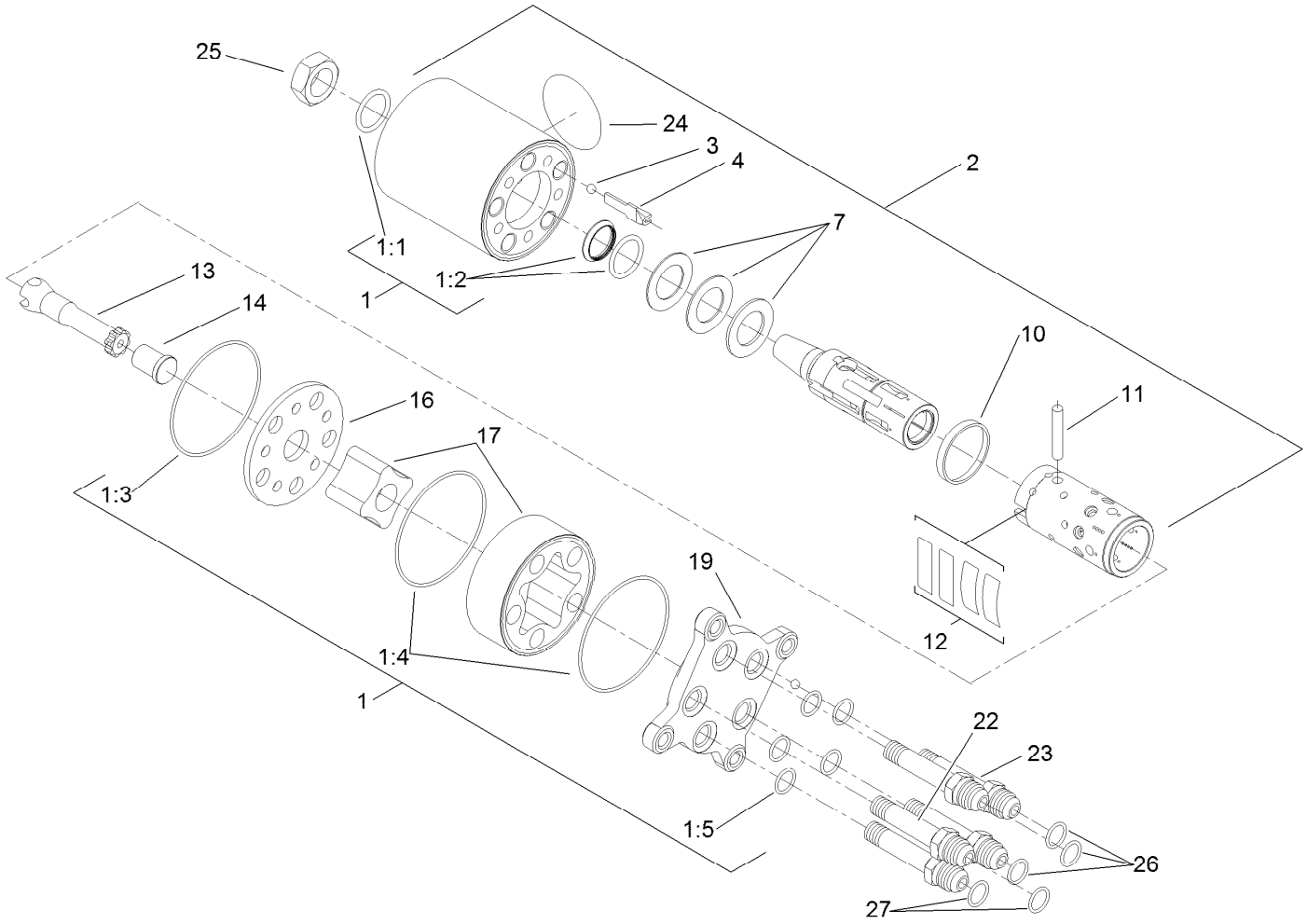

Steering Valve Assembly No. 121-7856

Ref.	Part Number	Qty.	Description
1	106-6716	1	Seal Kit
1:1		1	Ring-Seal, Dust ●
1:2		1	Seal-Shaft ●
1:3		1	O-Ring ●
1:4		2	O-Ring ●
1:5		5	O-Ring ●
2		1	Housing ●
3		1	Ball ●
4		1	Stop-Ball ●
7		1	Bearing ASM ●
10		1	Ring ●
11		1	Pin-Cross ●

Ref.	Part Number	Qty.	Description
12		1	Springs ●
13		1	Shaft ●
14		1	Spacer ●
16		1	Plate-Distributor ●
17		1	Gearwheel Set ●
19		1	Cover-End ●
22		1	Screw-Special ●
23		4	Screw-Special ●
24		1	Plate-Name ●
25	3296-33	1	Nut-Lock, NI
26	237-22	3	O-Ring
27	237-21	2	O-Ring

● Not serviced separately

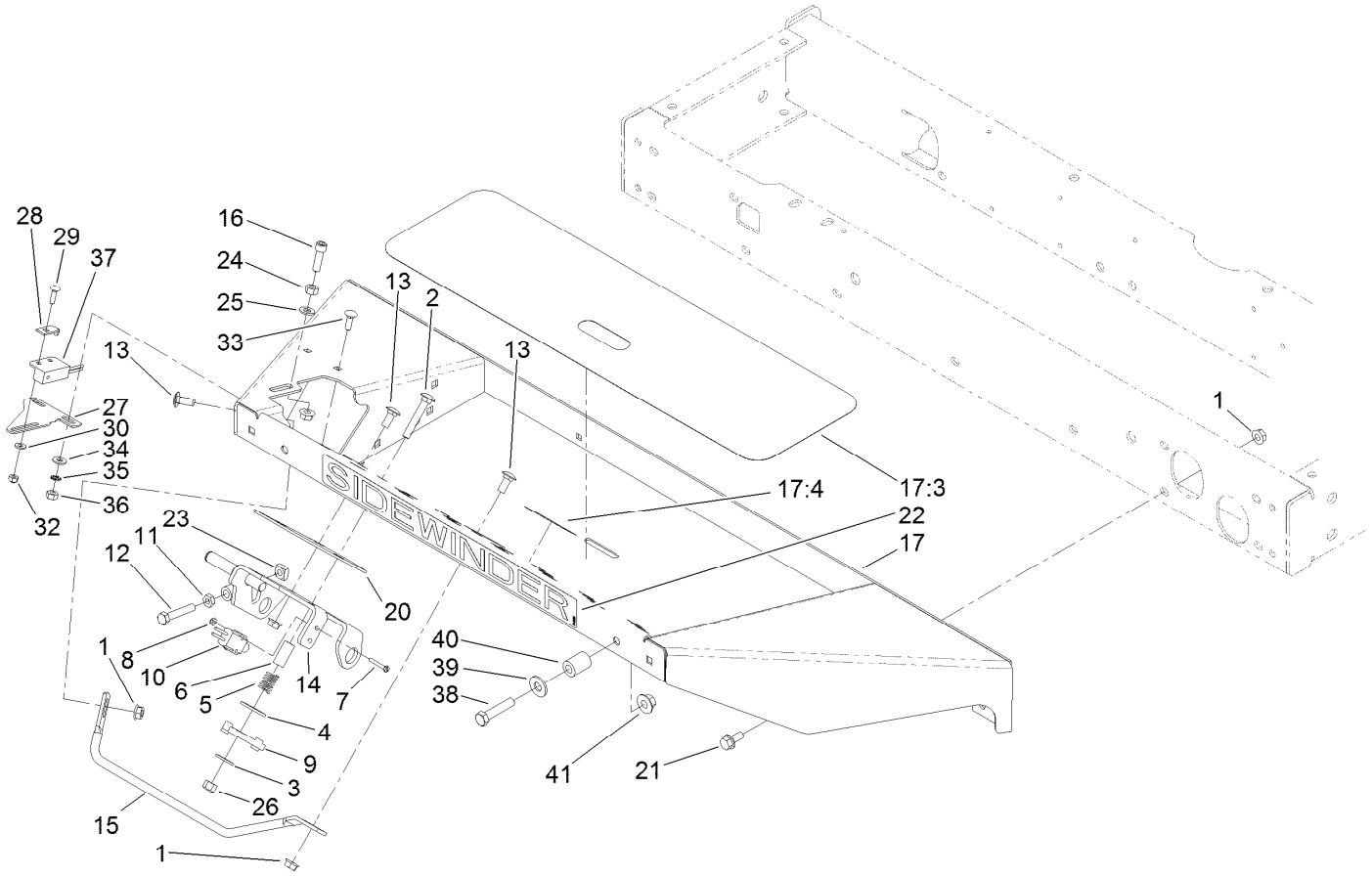

Floorplate Assembly

Ref.	Part Number	Qty.	Description
1	32128-20	15	Nut-HF
2	3230-6	1	Bolt-CARR
3	3256-3	1	Washer-Flat
4	3256-40	1	Washer-Flat
5	65-9940	1	Spring
6	95-8866	1	Tube-Arm, Rocker
7	32105-9	2	Screw
8	3296-9	2	Nut-Hex
9	99-3593	1	Arm-Rocker
10	95-8900	1	Switch
11	3218-2	1	Nut-Hex Jam
12	322-41	1	Bolt-Hex,TAP
13	3230-23	4	Bolt-CARR
14	95-8869-03	1	Bracket-Pedal, Traction
15	95-8893	1	Bar-Deflector
16	3274-22	1	Screw-HSH
17	106-4154	1	Floorplate ASM
17:3	99-3478	1	Tread-Foot
17:4	99-3444	1	Decal-Mow / Transport
20	106-2661-01	1	Plate-Support

Ref.	Part Number	Qty.	Description
21	3234-5	10	Screw-HHF
22	99-3388	1	Decal
23	99-3565	1	Nut-Square
24	3217-6	1	Nut-Hex
25	3256-23	1	Washer-Plain
26	3296-29	1	Nut-Lock, NI
27	100-4871	1	Bracket-Switch, Neutral
28	100-4872	1	Plate-Switch, Neutral
29	3229-20	1	Screw-CARR
30	3256-14	1	Washer-Flat
32	3296-2	1	Nut-Lock, NI
33	3229-1	2	Screw-CARR
34	3256-22	2	Washer-Flat
35	3255-7	2	Washer-Lock/EXT
36	3217-5	2	Nut-Hex
37	100-1270	1	Switch-Proximity
38	323-9	2	Screw-HH
39	3256-4	2	Washer-Flat
40	104-4613	2	Tube-Latch
41	32128-43	2	Nut-Flange

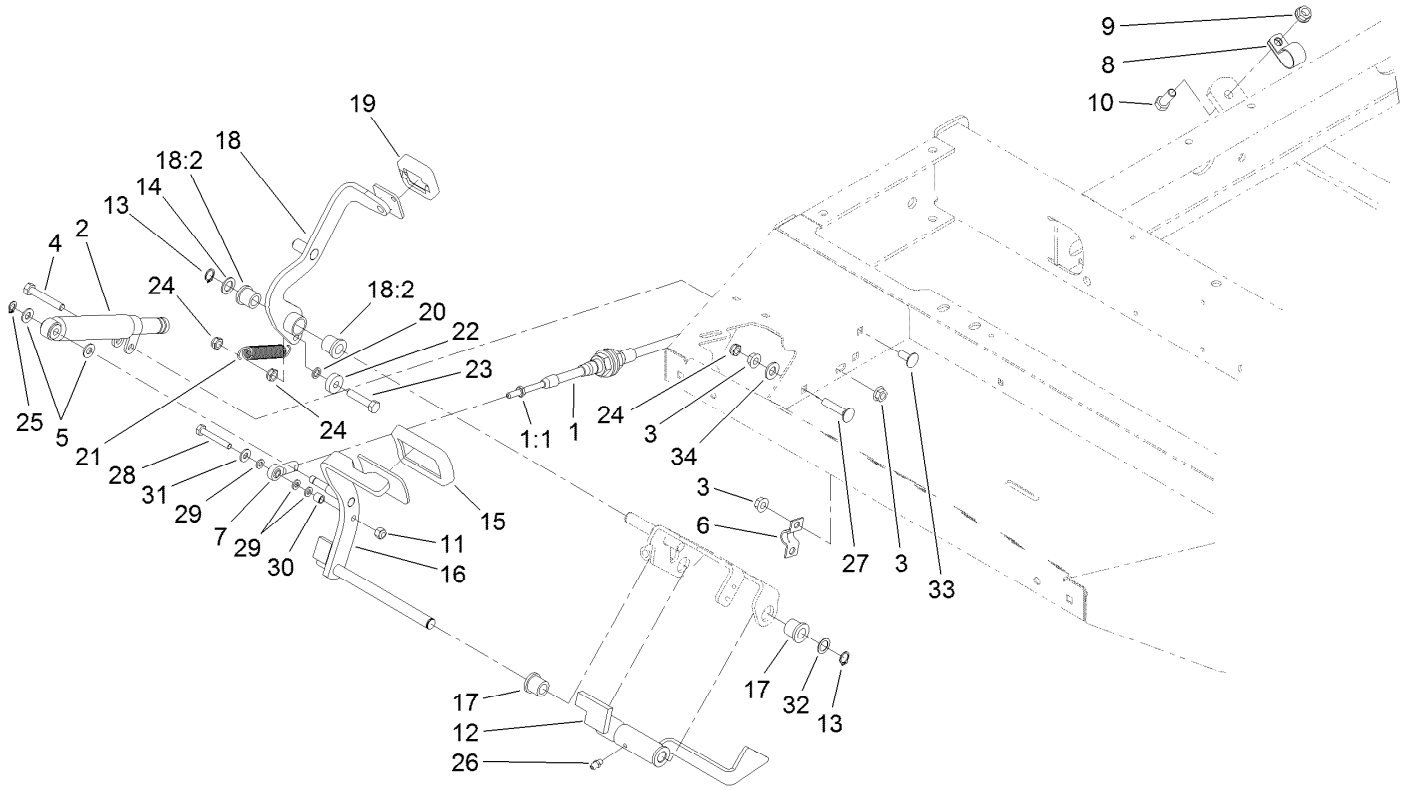

Traction Pedal Assembly

Ref.	Part Number	Qty.	Description
1	100-4815	1	Cable-Control, Traction
1:1	3220-1	2	Nut-Jam
2	76-8870	1	Damper-Lever
3	32128-20	5	Nut-HF
4	322-10	1	Screw-HH
5	3256-23	2	Washer-Plain
6	93-2092	1	Clamp-Cable
7	2411-41	1	Rod End-Ball Joint
8	2412-41	1	Clamp-R
9	3290-357	1	Nut-HSF
10	323-6	1	Screw-HH
11	3296-42	1	Nut-Lock, NI
12	95-8861	1	Slide
13	32151-84	2	Ring-Shaft, EXT
14	41-8440	1	Washer
15	74-9100	1	Pad-Pedal, Forward
16	104-4852-03	1	Pedal-Traction
17	256-243	2	Bearing-Flange

Ref.	Part Number	Qty.	Description
18	99-3379	1	Pedal-Reverse ASM
18:2	256-243	2	Bearing-Flange
19	74-9110	1	Pad-Pedal, Reverse
20	75-5470	1	Spacer-Bearing
21	99-3476	1	Spring-Extension
22	251-259	1	Bearing-Ball
23	322-7	1	Screw-HH
24	3296-47	3	Nut-Lock,NI
25	32151-3	1	Ring-Grip
26	302-5	1	Fitting-Grease
27	3230-27	1	Screw-CARR
28	321-10	1	Screw-HH
29	33093-00	3	Washer-Flat
30	99-3545	1	Spacer
31	3256-22	1	Washer-Flat
32	73-0040	4	Washer-Thrust
33	3230-23	2	Bolt-CARR
34	3256-24	1	Washer-Flat

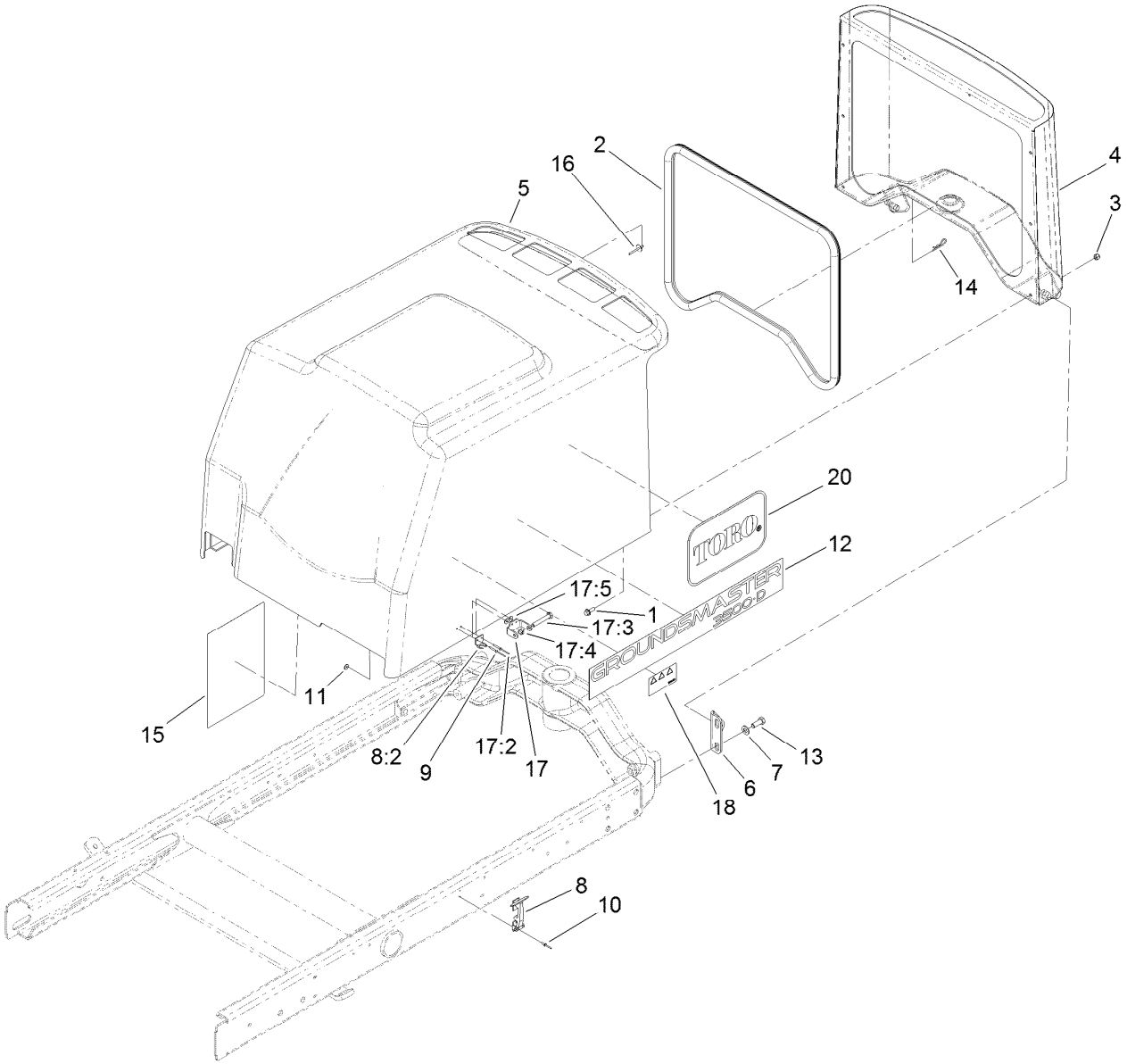

Hood Assembly

Ref.	Part Number	Qty.	Description
1	3234-4	6	Screw-HHF
2	100-4932	1	Trim-Seal
3	3296-42	6	Nut-Lock, NI
4	104-4853-03	1	Screen-Hood
5	121-3631	1	Hood ASM
5:1:1	106-8115	1	Heat Tape Repair Kit ●
6	95-8728	2	Bracket-Pivot, Hood
7	3256-24	4	Washer-Flat
8	59-9740	2	Flex Draw Latch ASM
8:2	249-40	1	Keeper
9	107-0333	4	Rivet-Pop
10	3290-55	4	Rivet-Pop
11	3269-10	4	Washer-Back

Ref.	Part Number	Qty.	Description
12	104-5152	2	Decal-Hood
13	323-6	4	Screw-HH
14	3290-467	1	Pin-Hair
15	121-3642	1	Decal-Service
16	3269-21	2	Rivet-Pop
17	119-2004	1	CE Latch Kit
17:2	107-0333	2	Rivet-Pop
17:3	322-10	1	Screw-HH
17:4	3296-47	1	Nut-Lock,NI
17:5	3269-10	2	Washer-Back
18	117-3270	1	Decal-Danger
20	66-6140	2	Decal

● Not illustrated

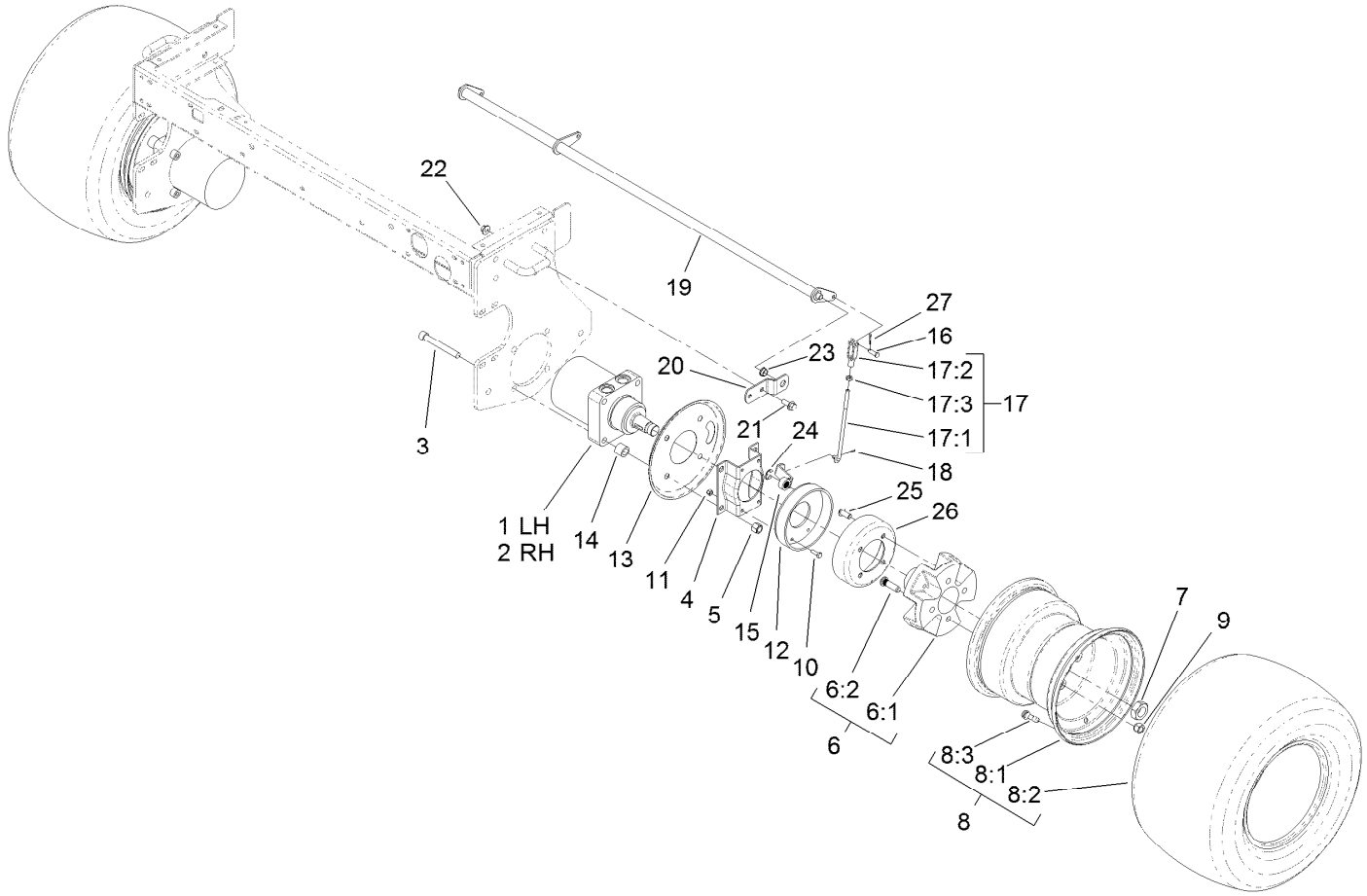

Wheel Motor and Brake Assembly

Ref.	Part Number	Qty.	Description
1	110-8785	1	HYD Motor ASM (CCW)
2	110-8786	1	HYD Motor ASM (CW)
3	3274-99	8	Screw-HSH
4	84-2000-03	2	Bracket-Brake
5	3296-23	8	Nut-Lock, NI
6		2	Wheel Hub/Stud ASM ●
6:1	104-0462	1	Hub-Wheel, Spacer
6:2	10-6830	4	Stud-Type, Drive
7	26-3790	2	Nut-Lock
8		2	Tire And Rim ASM ●
8:1	121-3548	1	Rim
8:2	117-5125	1	Tire
8:3	232-27	1	Stem-Valve
9	242-50	8	Nut-Lug
10	321-5	8	Screw-HH
11	3296-42	8	Nut-Lock, NI
12	104-7705	2	Brake ASM
13	104-0485-03	2	Shield-Wheel

Ref.	Part Number	Qty.	Description
14	119-8238	8	Spacer-Deck Pulley
15	114-2726	2	Lever-Brake
16	283-1	2	Pin-Clevis
17	115-6672	2	Brake Lever ASM
17:1	104-4627	1	Rod-Adjusting
17:2	1-303105	1	Yoke-Adjustable
17:3	3220-2	1	Nut-Jam
18	3272-6	2	Pin-Cotter
19	104-4625-03	1	Shaft-Pivot, Brake
20	95-8683	2	Bracket-Pivot, Brake
21	3234-11	4	Screw-HHF
22	32128-43	4	Nut-Flange
23	256-156	2	Bushing-Flange
24	104-7706	2	E-Ring, Bowed
25	3274-105	8	Screw-HSBH
26	104-4809	2	Drum-Brake
27	3272-10	2	Pin-Cotter

● Not serviced separately

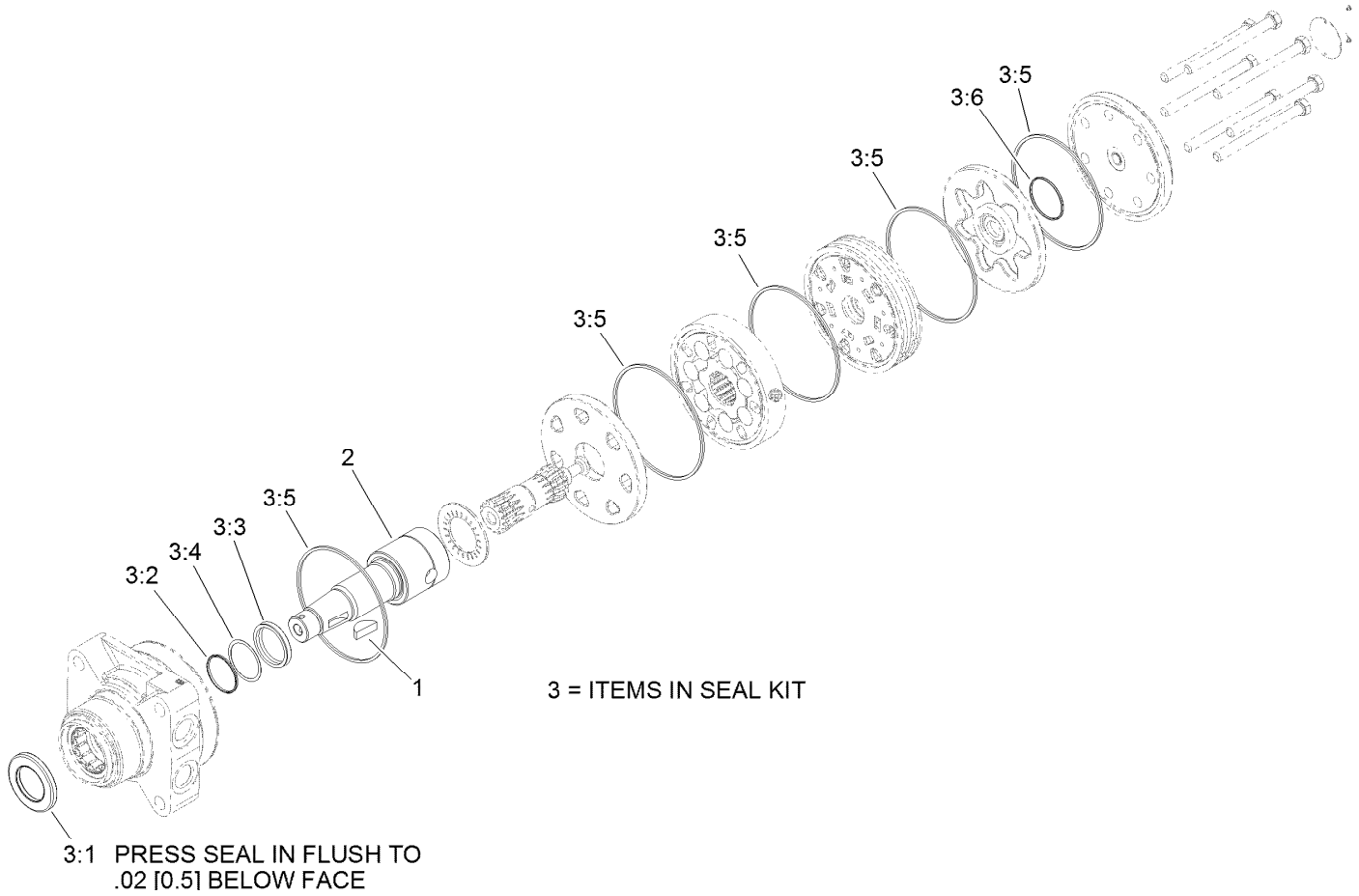

Hydraulic Motor Assembly No. 110-8785

Ref.	*Part Number*	*Qty.*	*Description*
1	3257-42	1	Key-Woodruff
2	99-3090	1	Shaft-Coupling
3	94-8178	1	Seal Kit
3:1		1	Seal-Dirt And Water ●
3:2		1	Backup-Ring ●
3:3		1	Seal-Shaft ●
3:4		1	Washer-Backup ●
3:5		5	Seal-Square, Ring (Inner) ●
3:6		1	Seal-Commutator ●

● Not serviced separately

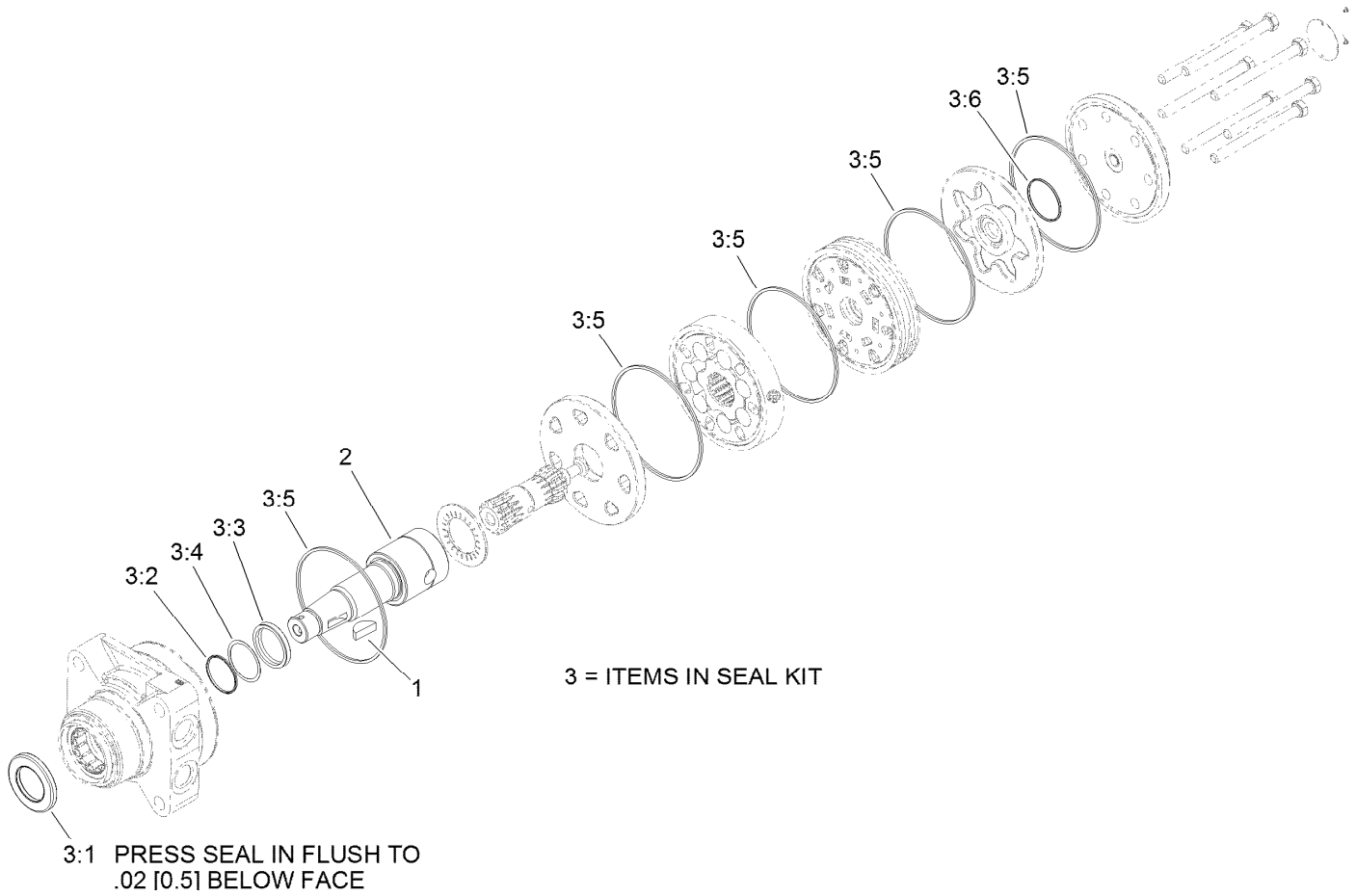

Hydraulic Motor Assembly No. 110-8786

Ref.	*Part Number*	*Qty.*	*Description*
1	3257-42	1	Key-Woodruff
2	99-3090	1	Shaft-Coupling
3	94-8178	1	Seal Kit
3:1		1	Seal-Dirt And Water ●
3:2		1	Backup-Ring ●
3:3		1	Seal-Shaft ●
3:4		1	Washer-Backup ●
3:5		5	Seal-Square, Ring (Inner) ●
3:6		1	Seal-Commutator ●

● Not serviced separately

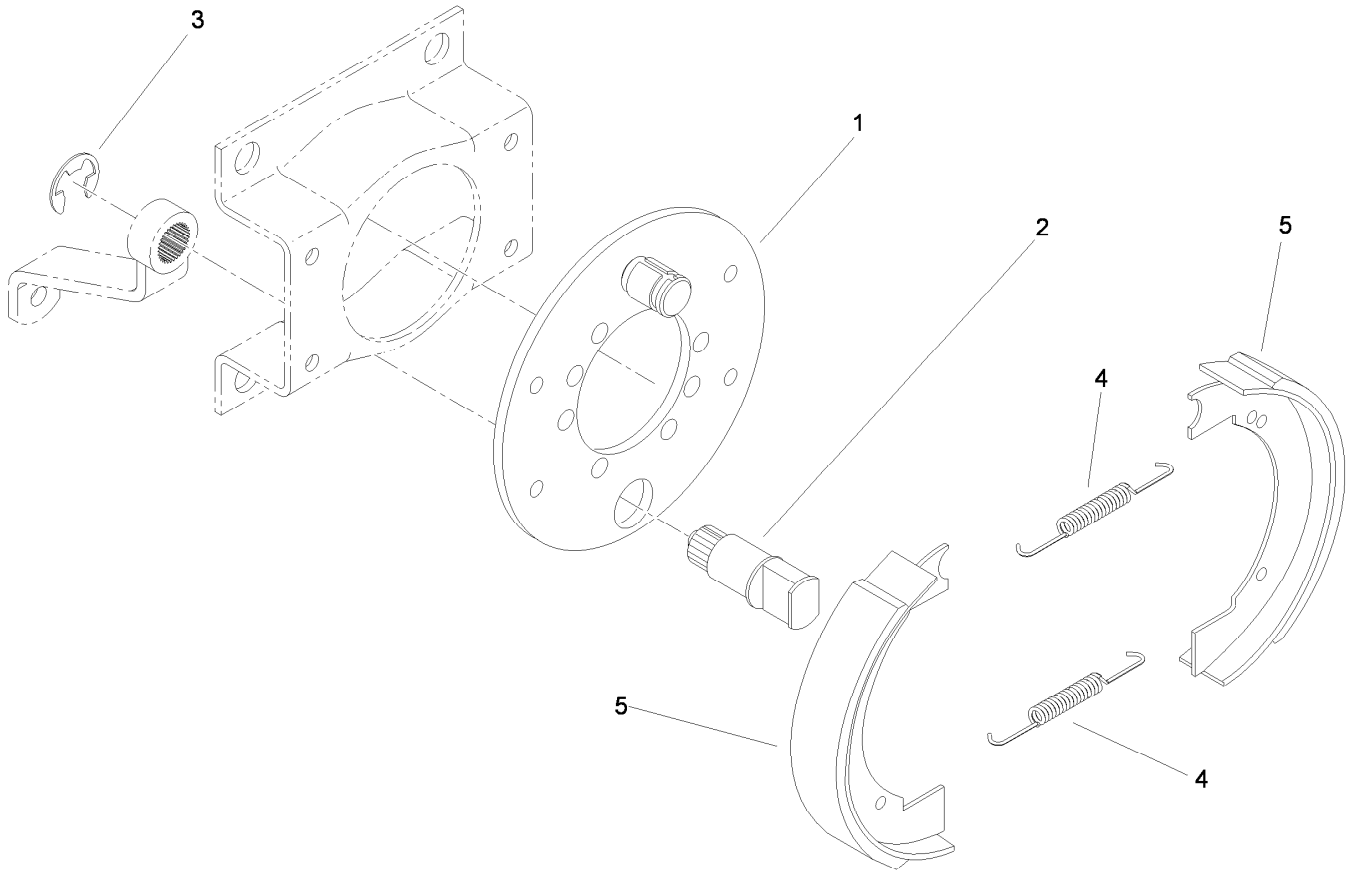

Brake Assembly No. 104-7705

Ref.	*Part Number*	*Qty.*	*Description*
1	70-9870	1	Plate-Backing
2	104-7707	1	Shaft-Cam, Brake
3	104-7706	1	E-Ring, Bowed
4	70-9880	2	Spring-Return
5	70-9840	2	Shoe-Brake

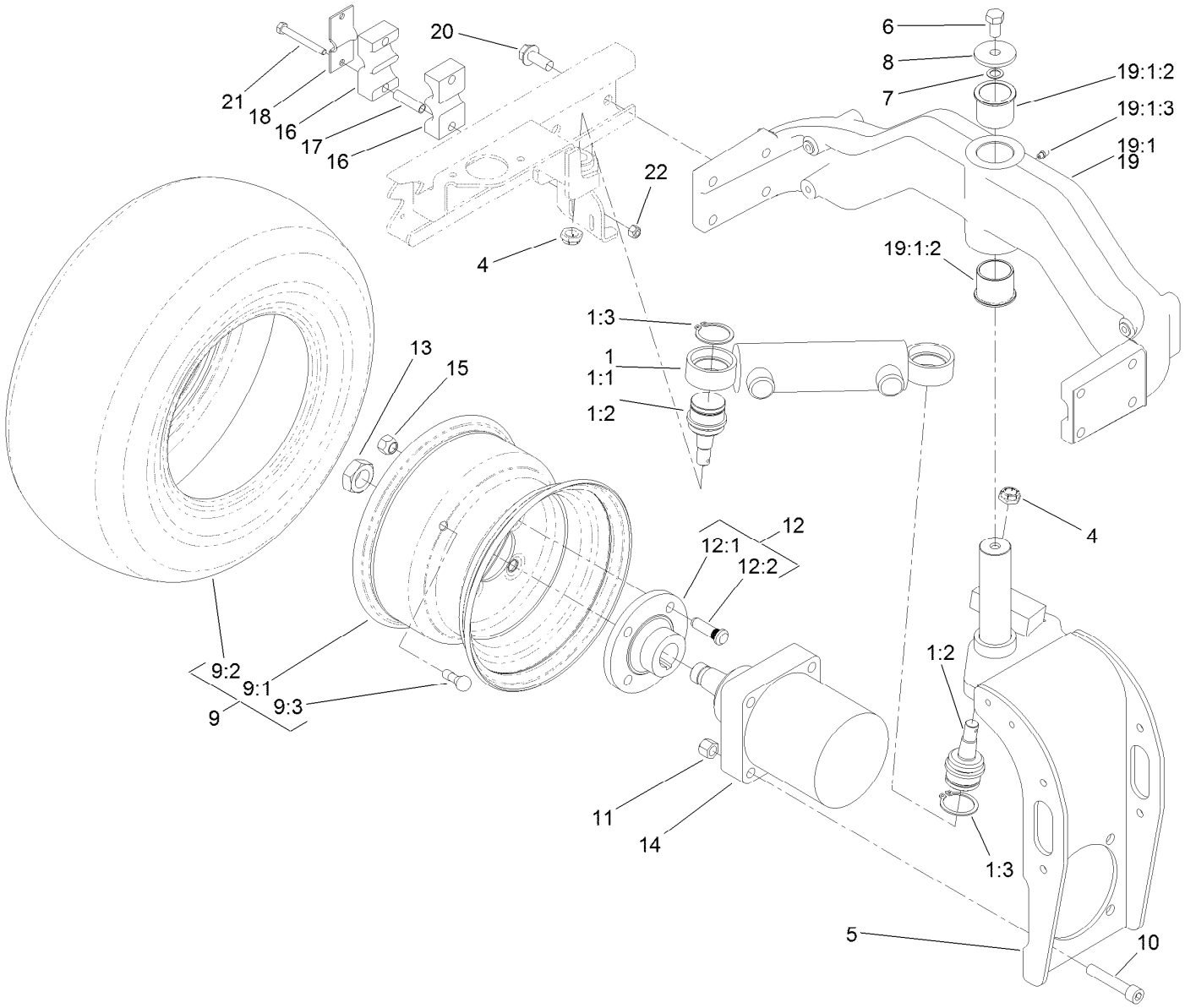

Rear Fork and Wheel Assembly

Ref.	Part Number	Qty.	Description
1		1	Steering Cylinder ASM ●
1:1	94-8141	1	HYD Cylinder ASM
1:2	121-3605	2	Ball Joint
1:3	32151-104	2	Ring-Retaining, External
4	121-3611	2	Nut-Hex, Flextop
5	95-8905-01	1	Fork-Rear
6	325-3	1	Screw-HH
7	3255-2	1	Washer-Lock, EXT
8	75-7730	1	Washer-Thrust
9		1	Wheel And Tire ASM ●
9:1	117-5129	1	Rim
9:2	115-1572	1	Tire
9:3	232-27	1	Stem-Valve
10	3274-93	4	Screw-HSH
11	3296-23	4	Nut-Lock, NI
12		1	Wheel Hub/Stud ASM ●

Ref.	Part Number	Qty.	Description
12:1	10-6870-03	1	Hub-Wheel
12:2	10-6830	4	Stud-Type, Drive
13	26-3790	1	Nut-Lock
14	95-8694	1	HYD Motor ASM
15	242-50	4	Nut-Lug
16	82-8170	2	Clamp
17	93-7960	2	Spacer
18	93-7961	1	Clamp-Drain, Case
19	107-7828-03	1	Casting-Rear
19:1		1	Rear Casting ASM ●
19:1:2	95-8805	2	Bushing
19:1:3	302-5	1	Fitting-Grease
20	3234-38	8	Screw-HHF
21	322-13	2	Screw-HH
22	3296-29	2	Nut-Lock, NI

● Not serviced separately

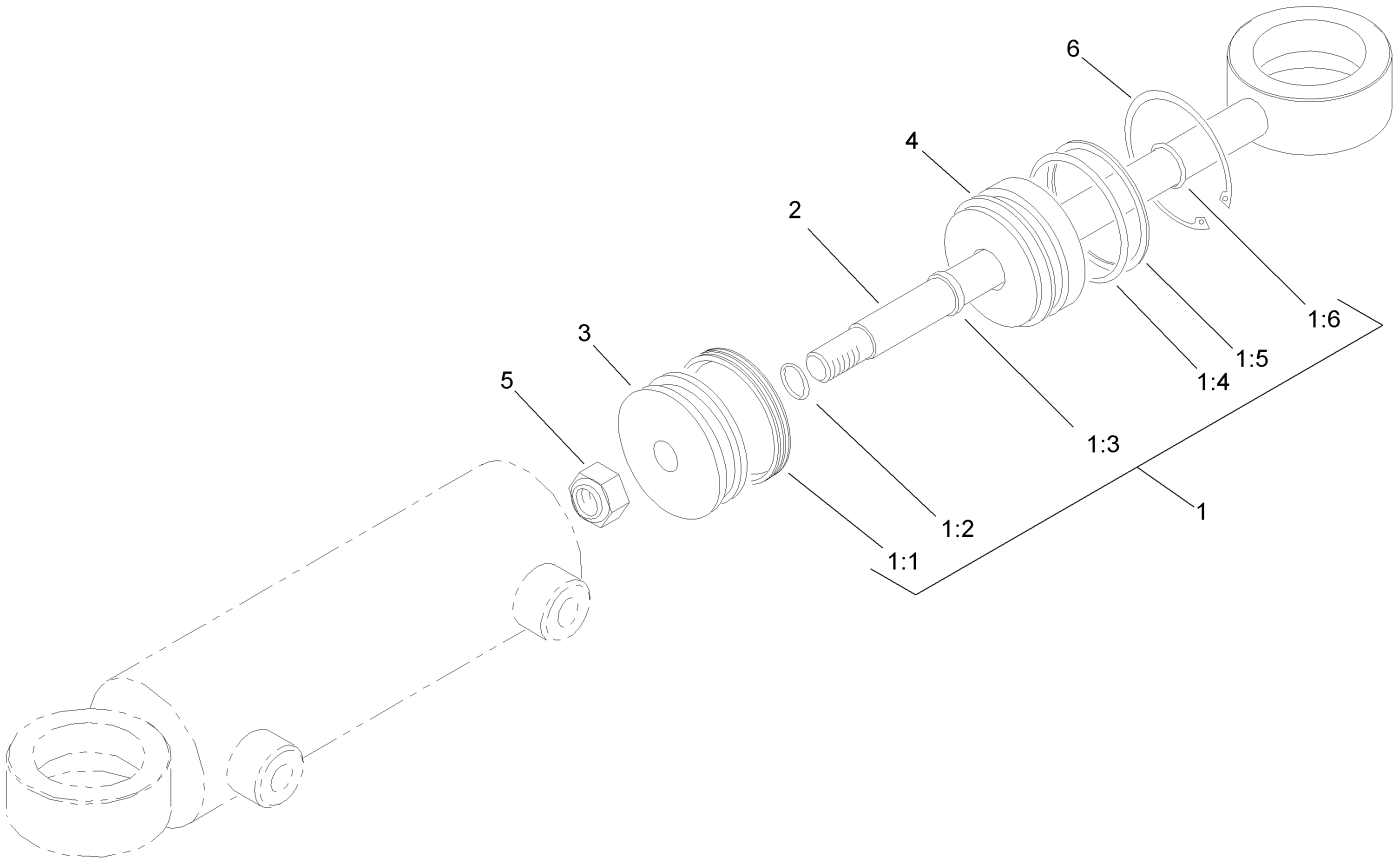

Hydraulic Cylinder Assembly No. 94-8141

Ref.	*Part Number*	*Qty.*	*Description*
1	86-5390	1	Seal Kit
1:1		1	Uniring ●
1:2		1	O-Ring ●
1:3		1	Seal-Rod ●
1:4		1	O-Ring ●
1:5		1	Ring-Backup ●
1:6		1	O-Ring ●
2		1	Rod ●
3		1	Piston ●
4		1	Gland ●
5		1	Nut-Lock ●
6		1	Ring-Retaining ●

● Not serviced separately

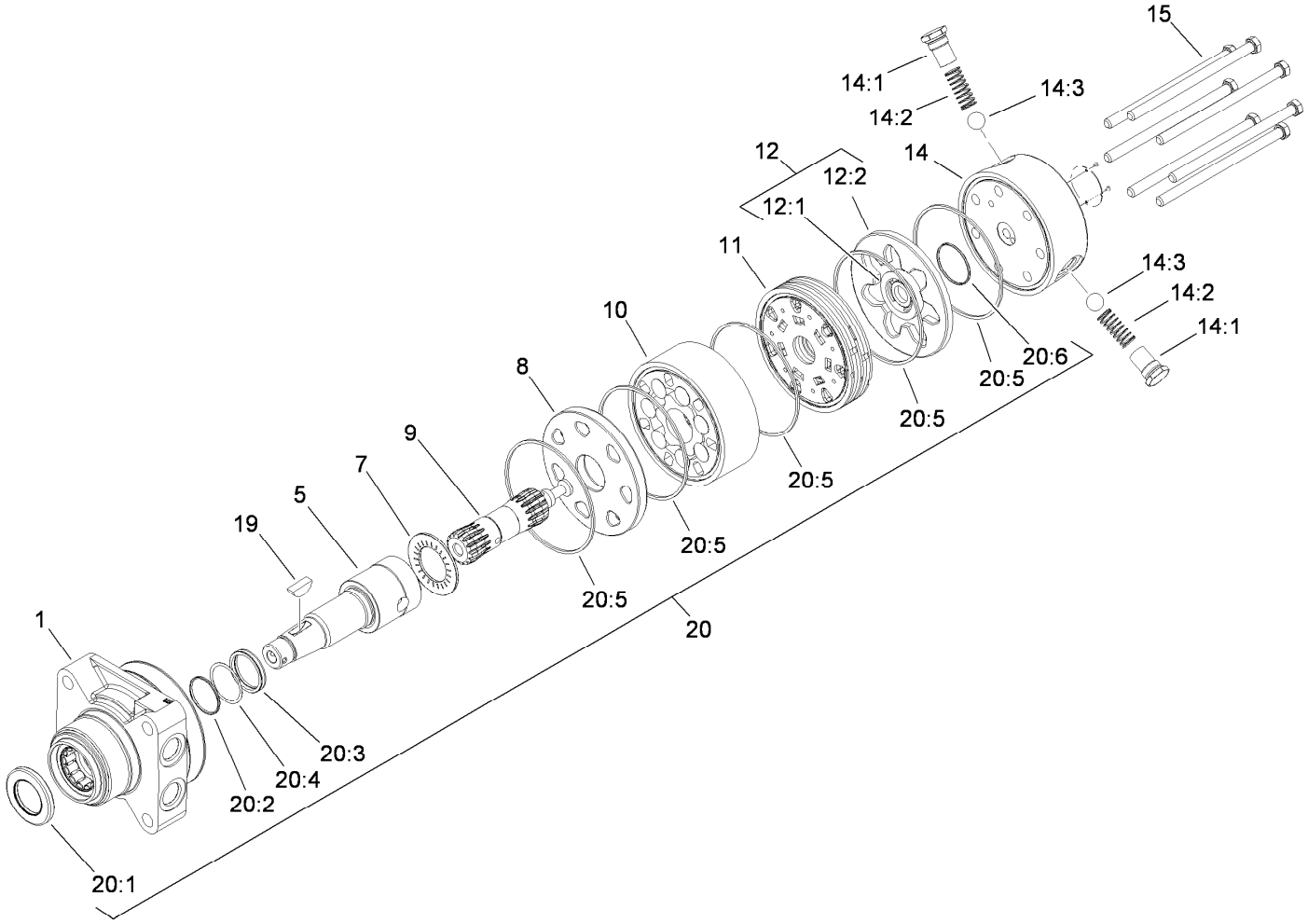

Hydraulic Motor Assembly No. 95-8694

Ref.	Part Number	Qty.	Description
1	76-0810	1	Housing ASM
5	99-3090	1	Shaft-Coupling
7	76-0850	1	Bearing-Thrust
8	76-0870	1	Plate-Wear
9	99-3537	1	Link-Drive
10	99-3539	1	Set-Rotor
11	99-3535	1	Manifold
12	76-0880	1	Commutator ASM
12:1		1	Commutator ●
12:2		1	Ring-Commutator ●
14	99-3538	1	End Cover ASM
14:1		1	Spring Cap And O-Ring ASM ●

Ref.	Part Number	Qty.	Description
14:2	99-3541	1	Spring
14:3	99-3540	1	Ball
15	99-3536	7	Screw-HH
19	3257-42	1	Key-Woodruff
20	94-8178	1	Seal Kit
20:1		1	Seal-Dirt And Water ●
20:2		1	Backup-Ring ●
20:3		1	Seal-Shaft ●
20:4		1	Washer-Backup ●
20:5		5	Seal-Square, Ring (Inner) ●
20:6		1	Seal-Commutator ●

● Not serviced separately

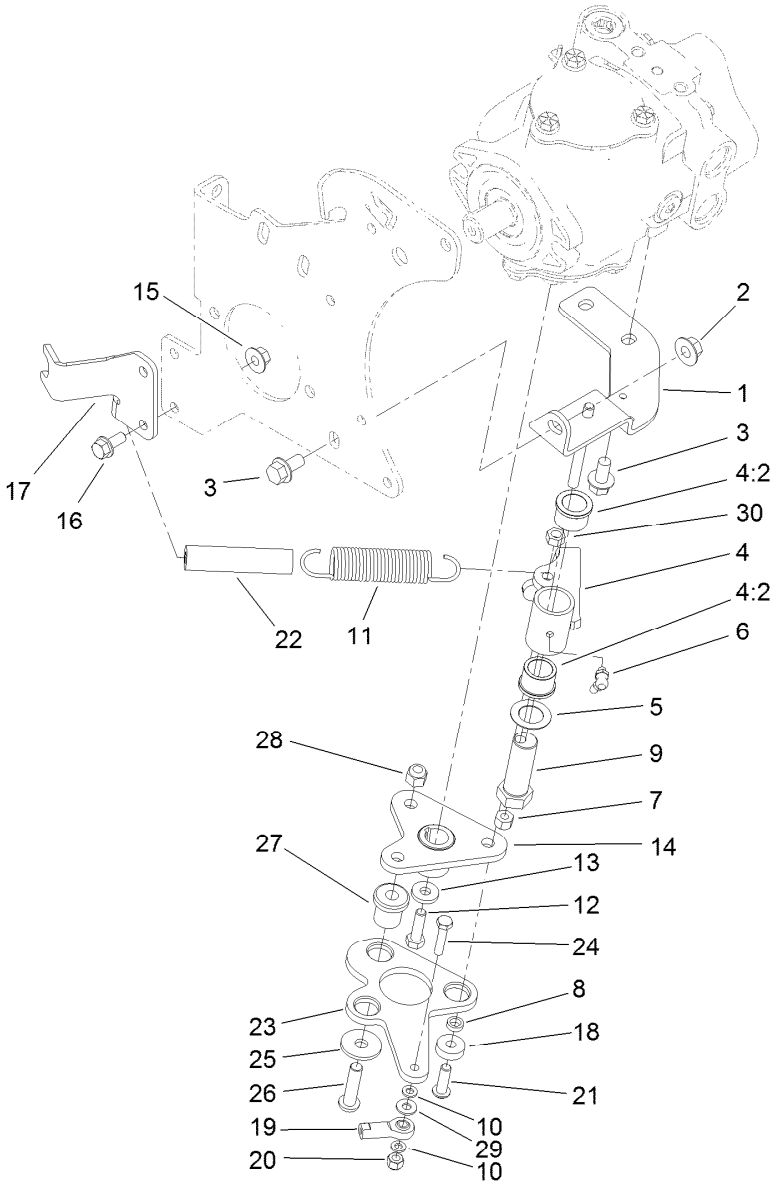

Neutral Arm Assembly

Ref.	Part Number	Qty.	Description
1	95-8960-03	1	Bracket-Neutral
2	32128-43	1	Nut-Flange
3	3234-1	3	Screw-HHF
4	104-0422	1	Neutral Arm ASM
4:2	256-113	2	Bushing-Flange
5	3-6498	1	Washer-Thrust
6	302-60	1	Fitting-Grease
7	3296-29	1	Nut-Lock, NI
8	100-4817	1	Spacer
9	76-8640	1	Stud-Traction
10	33093-00	2	Washer-Flat
11	94-1369	1	Spring-Extension
12	3210-6	1	Screw-HH
13	88-7200	1	Washer-Flat
14	120-5566	1	Hub
15	32128-44	2	Nut
16	3234-5	2	Screw-HHF
17	104-0464-03	1	Bracket-Support, Cable
18	251-259	1	Bearing-Ball
19	2411-41	1	Rod End-Ball Joint
20	3296-42	1	Nut-Lock, NI
21	3274-104	1	Screw-HSBH
22	99-3556	1	Hose
23	99-3594-03	1	Lever-Pump
24	321-8	1	Screw-HH
25	2844	3	Washer
26	95-3857	3	Screw-HSBH
27	63-9750	3	Mount
28	3296-39	3	Nut-Lock, NI
29	3256-22	1	Washer-Flat
30	32153-3	1	Nut-Hex, Side Deform

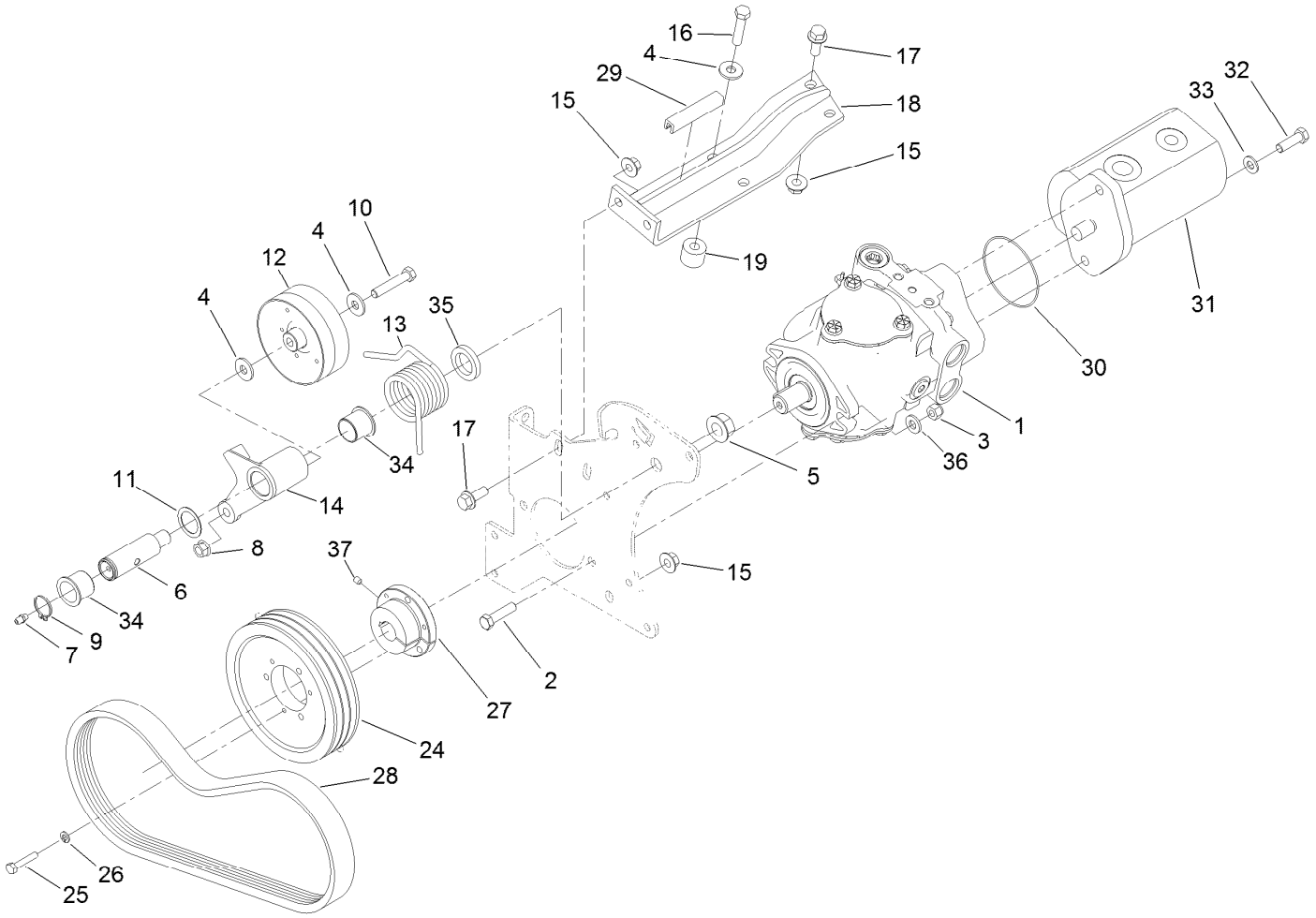

Gear Pump and Piston Pump Assembly

Ref.	Part Number	Qty.	Description
1	104-4890	1	Piston Pump ASM
2	323-8	2	Screw-HH
3	3296-39	2	Nut-Lock, NI
4	80-6990	4	Washer-Hardened
5	32128-54	1	Nut-HF
6	99-3624	1	Shaft-Pivot, Idler
7	302-5	1	Fitting-Grease
8	32128-21	1	Nut-HF Lock
9	32151-36	1	Ring-Retaining
10	323-10	1	Screw-HH
11	74-1810	1	Washer
12	107-7834	1	Pulley-Idler
13	115-3488	1	Spring-Torsion
14	99-3623-03	1	Arm-Idler
15	32128-43	4	Nut-Flange
16	323-19	2	Screw-HH
17	3234-11	4	Screw-HHF

Ref.	Part Number	Qty.	Description
18	99-3436-03	1	Support-Pump
19	99-3440	2	Spacer
24	120-3350	1	Pulley-3V
25	321-13	3	Screw-HH
26	3253-3	3	Washer-Lock
27	100-4813	1	Bushing-Lock, Taper
28	120-3351	1	Belt-3V
29	70-2041	1	Trim
30	353-949	1	O-Ring
31	108-9036	1	HYD Gear Pump ASM
32	323-7	2	Screw-HH
33	3256-24	2	Washer-Flat
34	126-1963	2	Bushing-Pivot
35	99-3625	1	Spacer-Arm, Idler
36	100-4852	2	Washer-Hardened
37	3245-7	1	Screw-Set

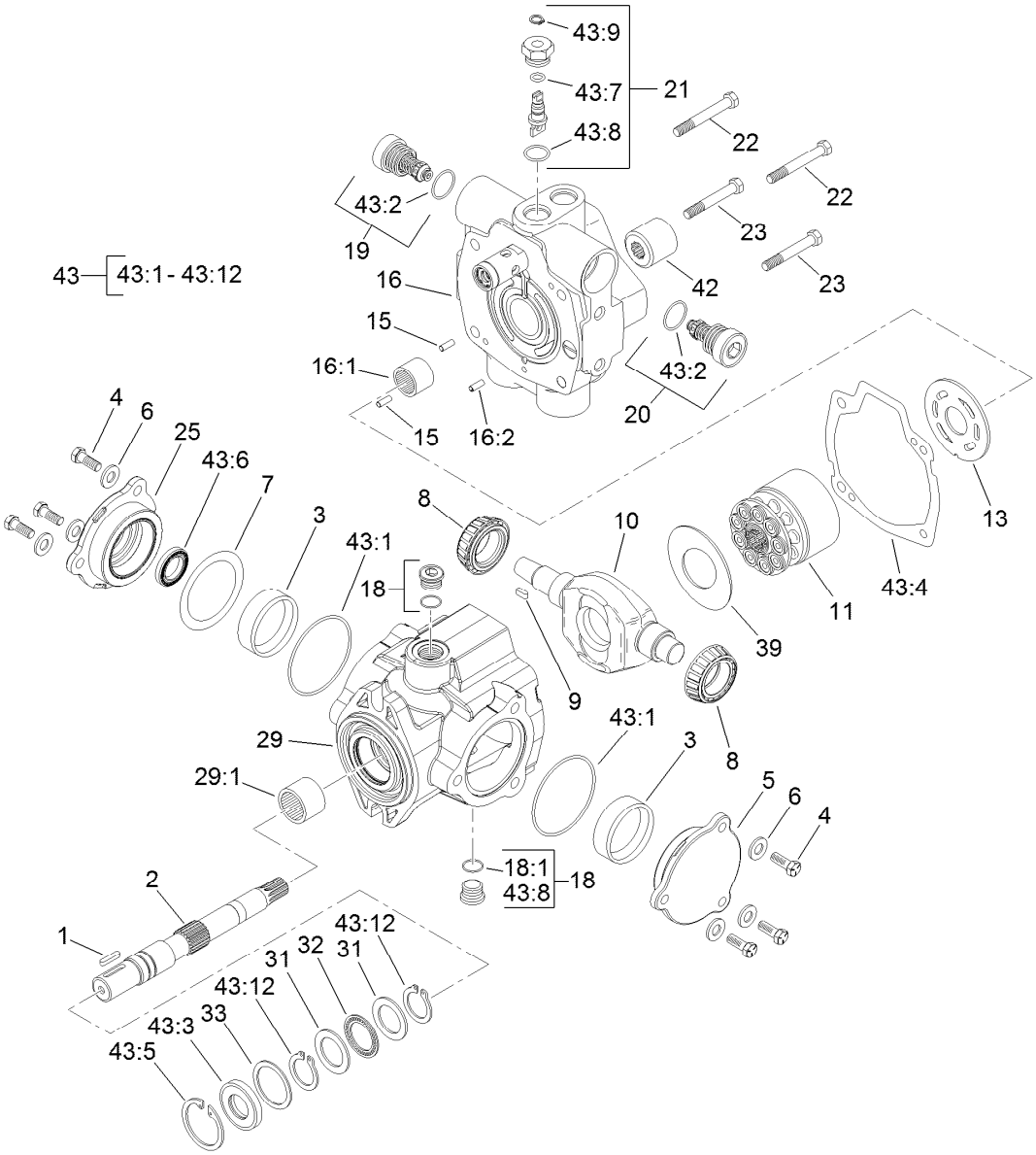

Hydraulic Pump Assembly No. 104-4890

Ref.	Part Number	Qty.	Description
1	94-3645	1	Key
2	94-6359	1	Shaft-Drive
3	104-4046	2	Bearing-Cup
4	98-4640	6	Screw-Cap
5	98-4644	1	Plate-Cover
6	105-9762	6	Washer
7	100-3182	2	Shim Kit
8	98-4639	2	Bearing-Cone
9	94-3646	1	Key
10	104-4888	1	Swashplate
11	76-6070	1	Rotating Kit
13	104-0429	1	Plate-Valve
15	76-6150	2	Pin-Dowel
16	105-3813	1	Endcover Sub ASM
16:1	94-6368	1	Bearing
16:2		1	Pin-Roll ■
18	74-9280	2	Plug ASM
18:1		1	O-Ring ■

Ref.	Part Number	Qty.	Description
19	104-4889	1	Relief Valve ASM
20	105-3812	1	Valve-Check
21	105-3811	1	Valve-Bypass
22	76-6170	2	Capscrew
23	76-6160	2	Capscrew
25	98-4645	1	Plate-Cover
29	100-3176	1	Housing ASM
29:1	94-6363	1	Bearing
31	252-71	2	Washer-Thrust
32	252-66	1	Bearing-Thrust
33	33-3720	1	Washer
39	98-4635	1	Insert-Plate, Cam
42	74-9040	1	Coupler
43	120-5754	1	Seal Kit
43:1		2	O-Ring ■
43:2		2	O-Ring ■
43:3		1	Seal-Shaft ■
43:4		1	Gasket ■

● Not illustrated

■ Not serviced separately

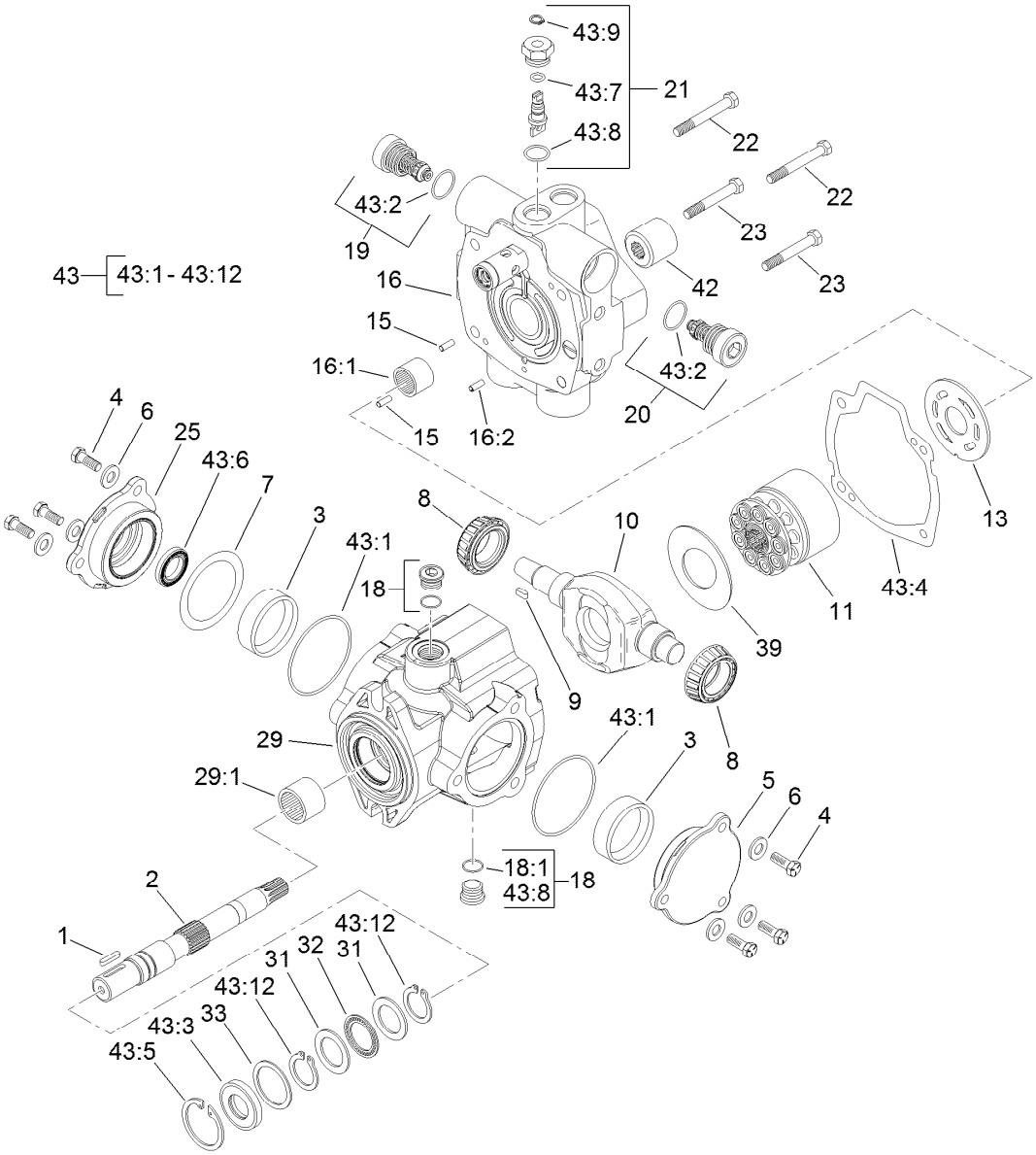

Hydraulic Pump Assembly No. 104-4890 (continued)

Ref.	Part Number	Qty.	Description
43:5		1	Ring-Retaining ■
43:6		1	Seal-Shaft ■
43:7		1	O-Ring ■
43:8		5	O-Ring ■
43:9		1	Ring-Retaining ■

Ref.	Part Number	Qty.	Description
43:10		1	O-Ring ● ■
43:11		1	O Ring-Molded ● ■
43:12		2	Ring-Retaining ■
43:13		1	O-Ring ■ ●

● Not illustrated

■ Not serviced separately

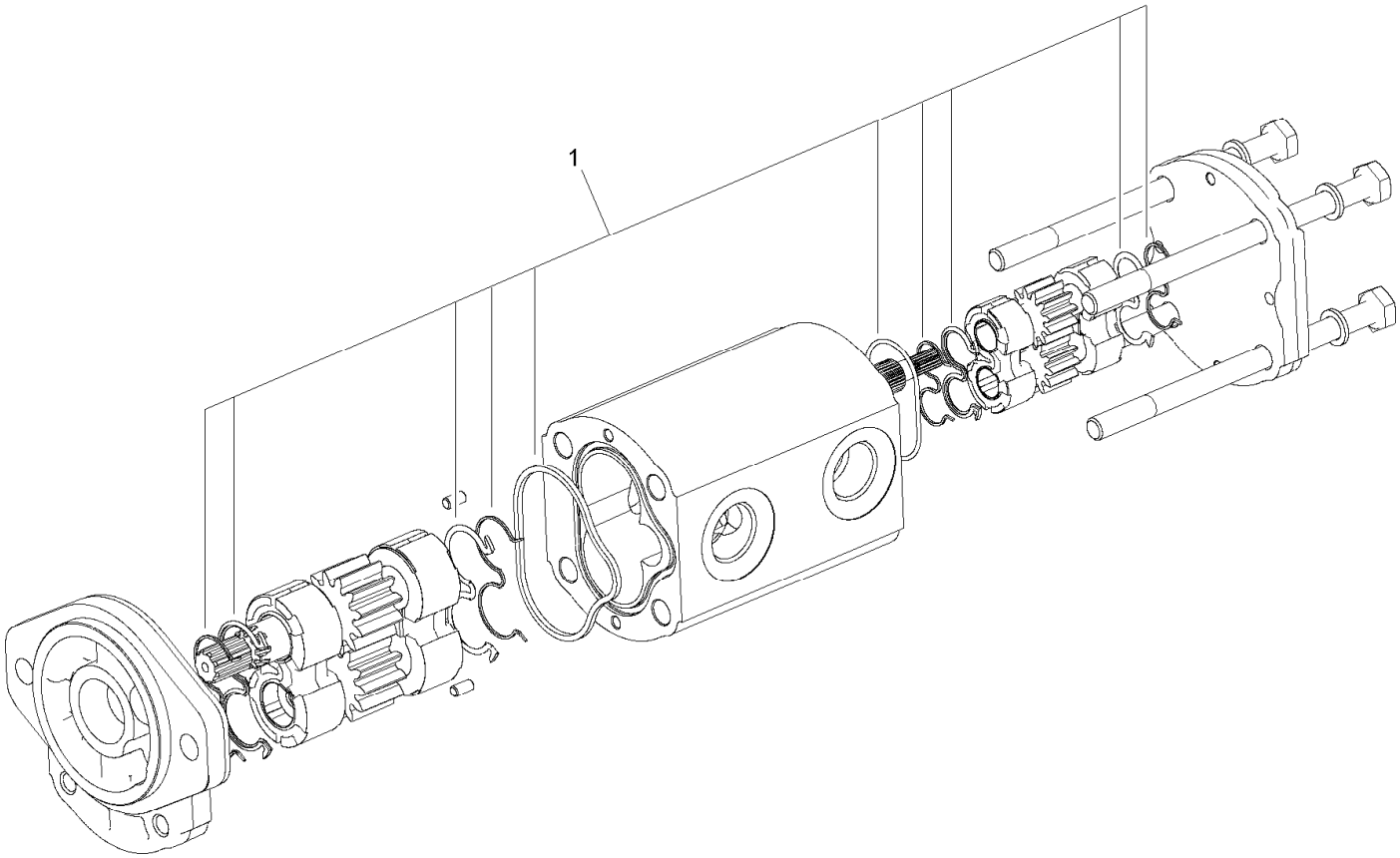

Hydraulic Gear Pump Assembly No. 108-9036

Ref.	*Part Number*	*Qty.*	*Description*
1	110-8755	1	Seal Kit

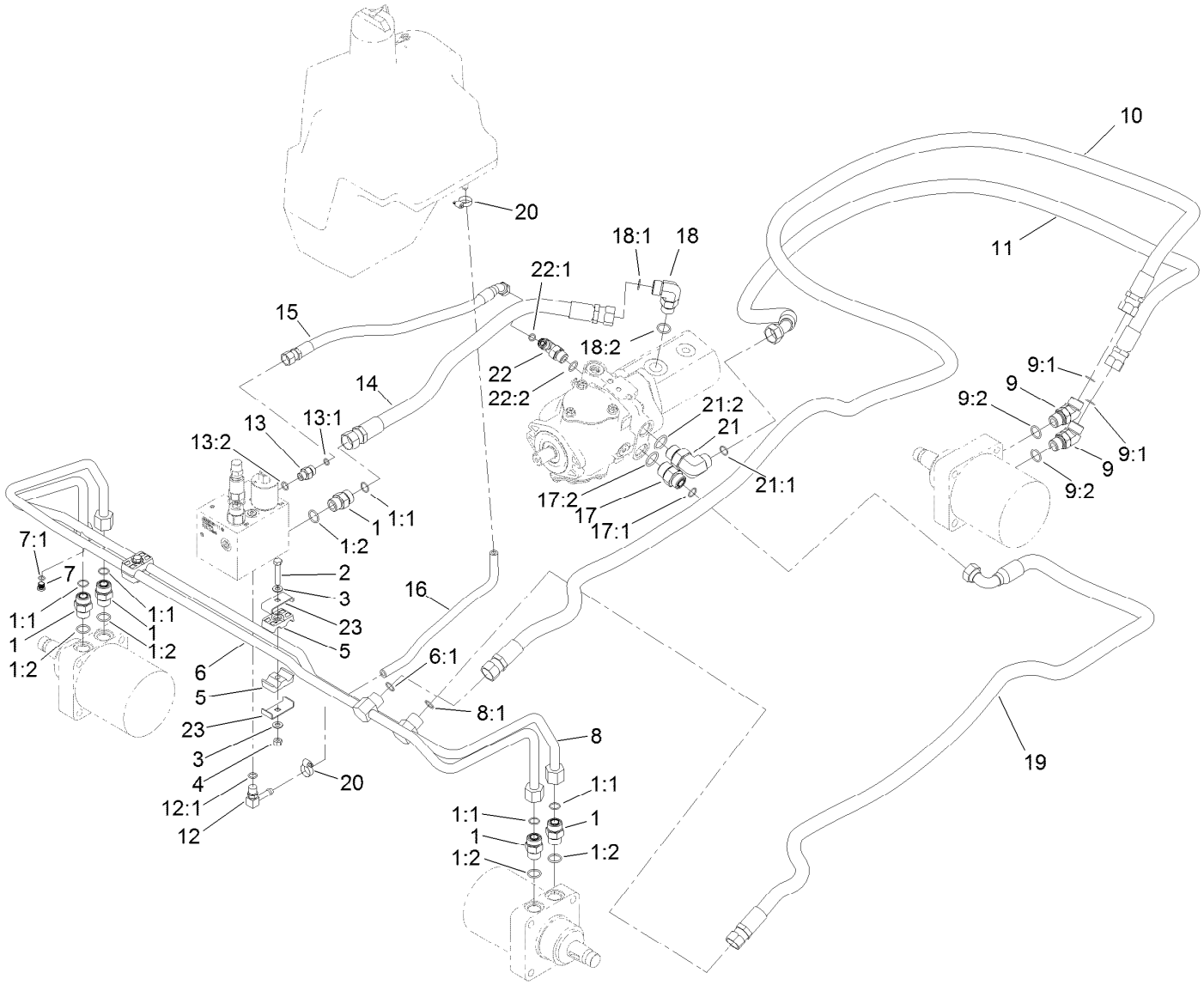

Traction Hydraulic Assembly

Ref.	Part Number	Qty.	Description
1	340-7	5	Fitting-Straight
1:1	237-65	1	O-Ring
1:2	237-80	1	O-Ring
2	322-9	2	Screw-HH
3	3256-23	4	Washer-Plain
4	3296-29	2	Nut-Lock, NI
5	56-7971	4	Clamp-Tube
6	95-8783	1	Tube ASM
6:1	237-65	1	O-Ring
7	353-990	1	Plug ASM
7:1	237-78	1	O-Ring
8	95-8784	1	Tube ASM
8:1	237-65	1	O-Ring
9	340-14	2	Fitting-HYD, 45 DEG
9:1	237-65	1	O-Ring
9:2	237-80	1	O-Ring
10	105-1213	1	Hose-HYD
11	105-1212	1	Hose-HYD
12	100-4887	1	Fitting-Elbow, 90
12:1	237-42	1	O-Ring
13	340-2	1	Fitting-Straight

Ref.	Part Number	Qty.	Description
13:1	237-22	1	O-Ring
13:2	237-42	1	O-Ring
14	104-0488	1	Hose-HYD
15	92-7595	1	Hose-HYD
16	80-7342	1	Hose-HYD
17	340-8	1	Fitting-Straight
17:1	237-65	1	O-Ring
17:2	237-81	1	O-Ring
18	340-17	1	Fitting-Elbow, 90 DEG
18:1	237-65	1	O-Ring
18:2	237-80	1	O-Ring
19	105-1214	1	Hose-HYD
20	2412-36	1	Clamp-Hose
21	340-139	1	Fitting-Elbow 90
21:1	237-81	1	O-Ring
21:2	237-65	1	O-Ring
22	340-18	1	Fitting-HYD, 90 DEG
22:1	237-79	1	O-Ring
22:2	237-22	1	O-Ring
23	119-1419	4	Plate-Clamp

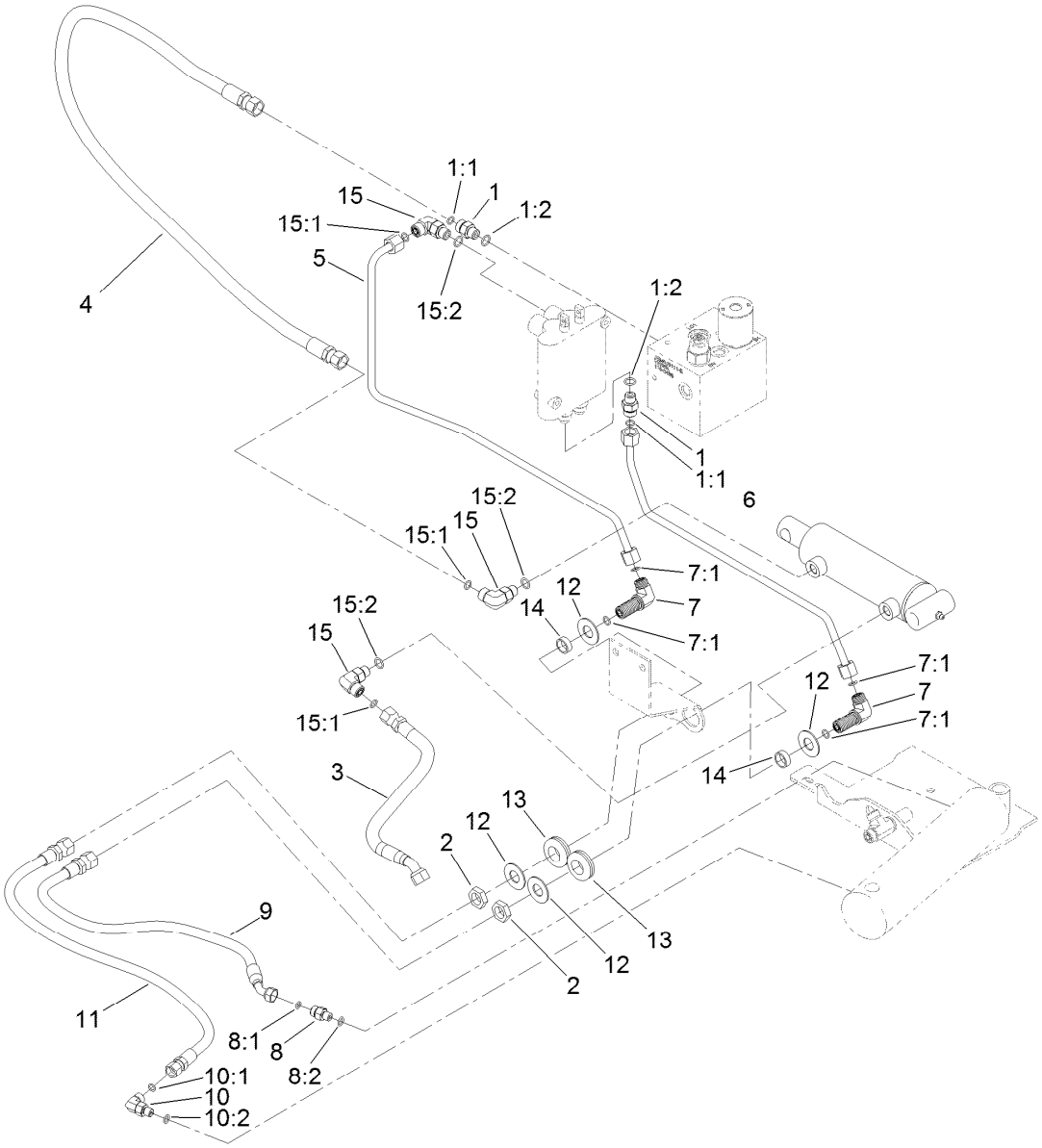

Lift Hydraulic Assembly

Ref.	Part Number	Qty.	Description
1	340-2	2	Fitting-Straight
1:1	237-22	1	O-Ring
1:2	237-42	1	O-Ring
2	340-70	2	Nut-Lock
3	104-0407	1	Hose-HYD
4	100-4891	1	Hose-HYD
5	95-8790	1	Tube-HYD
6	95-8791	1	Tube-HYD
7	340-154	2	Union-Bulkhead
7:1	237-22	2	O-Ring
8	85-9720	1	Fitting-STR, Orifice
8:1	237-78	1	O-Ring

Ref.	Part Number	Qty.	Description
8:2	237-21	1	O-Ring
9	95-8838	1	Hose-HYD
10	340-132	1	Fitting-Elbow, 90 DEG
10:1	237-78	1	O-Ring
10:2	237-21	1	O-Ring
11	95-8839	1	Hose-HYD
12	69-8940	4	Washer
13	240-4	2	Grommet-Rubber
14	69-8970	2	Spacer
15	340-77	3	Fitting-Elbow, 90 DEG
15:1	237-22	1	O-Ring
15:2	237-42	1	O-Ring

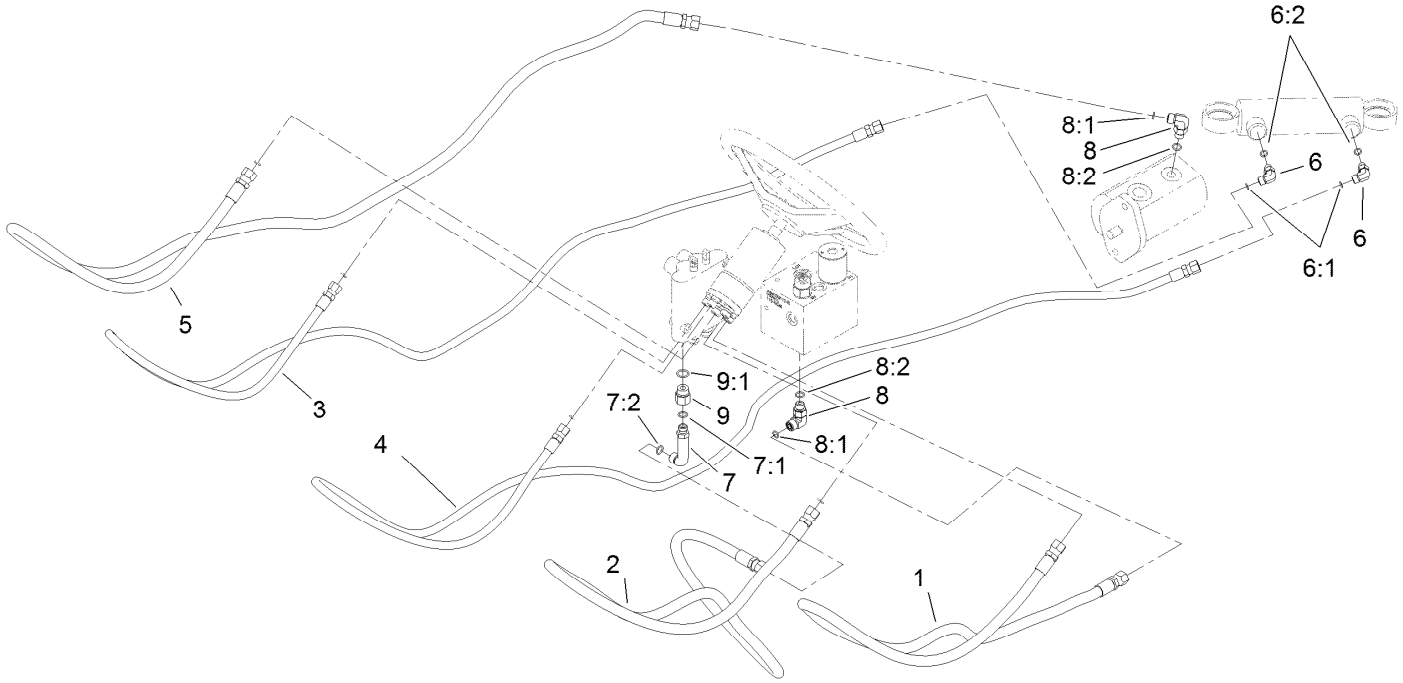

Steering Hydraulic Assembly

Ref.	Part Number	Qty.	Description
1	95-8842	1	Hose-HYD
2	95-8843	1	Hose-HYD
3	100-4892	1	Hose-HYD
4	100-4893	1	Hose-HYD
5	95-8846	1	Hose-HYD
6	340-132	2	Fitting-Elbow, 90 DEG
6:1	237-78	1	O-Ring
6:2	237-21	1	O-Ring

Ref.	Part Number	Qty.	Description
7	69-4320	1	Fitting-HYD, 90 DEG
7:1	237-22	1	O-Ring
7:2	237-42	1	O-Ring
8	340-77	2	Fitting-Elbow, 90 DEG
8:1	237-22	1	O-Ring
8:2	237-42	1	O-Ring
9	353-397	1	Reducer-Adapter
9:1	237-79	1	O-Ring

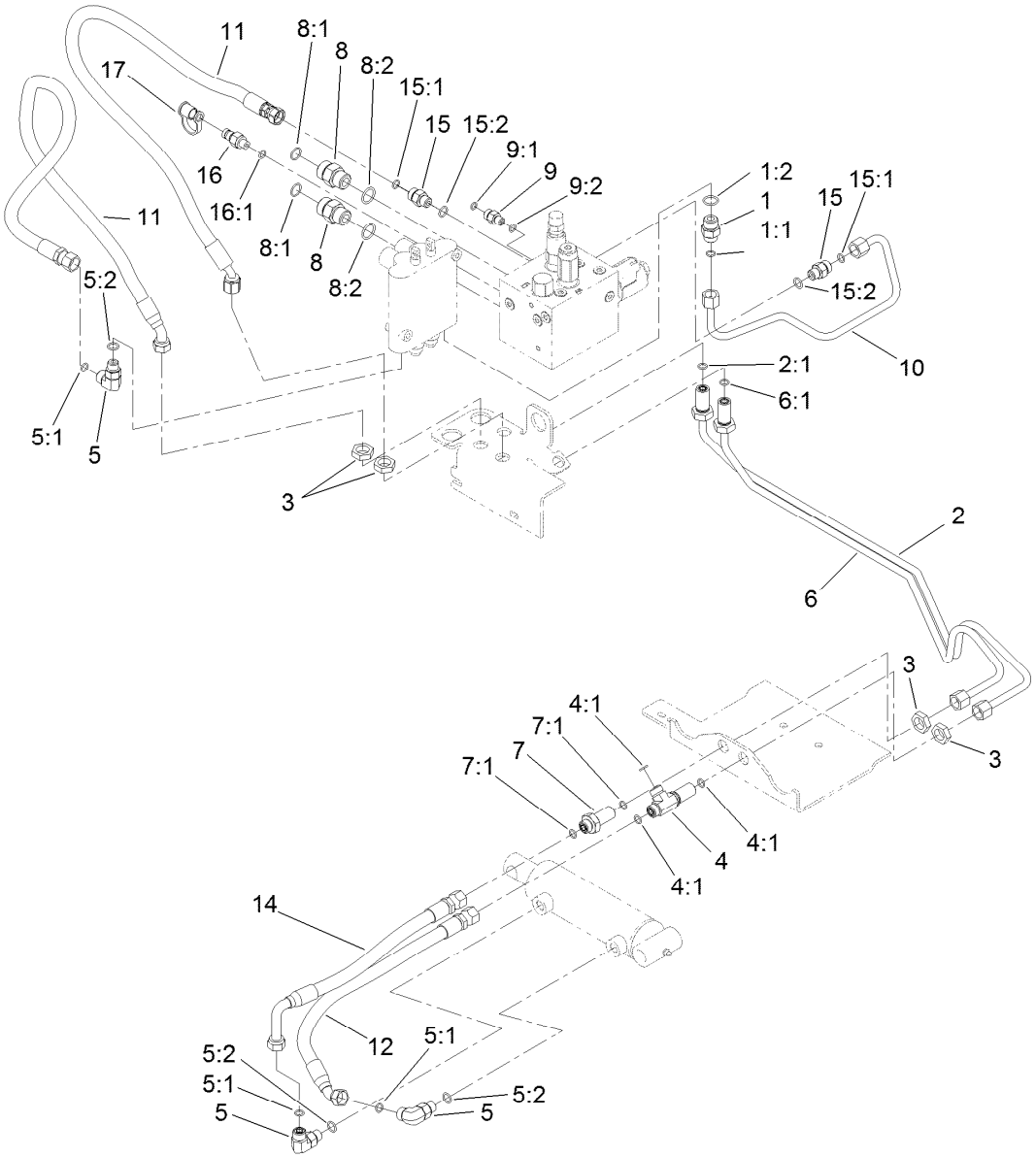

Sidewinder Hydraulic Assembly

Ref.	Part Number	Qty.	Description
1	340-3	1	Fitting-Straight
1:1	237-22	1	O-Ring
1:2	237-79	1	O-Ring
2	104-0402	1	Tube-HYD
2:1	237-22	1	O-Ring
3	340-70	4	Nut-Lock
4	340-68	1	Fitting-Tee, Bulkhead
4:1	237-22	3	O-Ring
5	340-77	3	Fitting-Elbow, 90 DEG
5:1	237-22	1	O-Ring
5:2	237-42	1	O-Ring
6	104-0403	1	Tube ASM
6:1	237-22	1	O-Ring
7	340-71	1	Fitting-Straight, Bulkhead
7:1	237-22	2	O-Ring
8	340-7	2	Fitting-Straight

Ref.	Part Number	Qty.	Description
8:1	237-65	1	O-Ring
8:2	237-80	1	O-Ring
9	340-92	1	Fitting-Straight
9:1	237-78	1	O-Ring
9:2	237-21	1	O-Ring
10	100-4827	1	Tube-HYD
11	95-8822	2	Hose-HYD
12	104-0405	1	Hose-HYD
14	104-0406	1	Hose-HYD
15	340-2	2	Fitting-Straight
15:1	237-22	1	O-Ring
15:2	237-42	1	O-Ring
16	354-77	1	Fitting-Quick
16:1	237-78	1	O-Ring ●
17	354-79	1	Cap-Dust

● Not illustrated

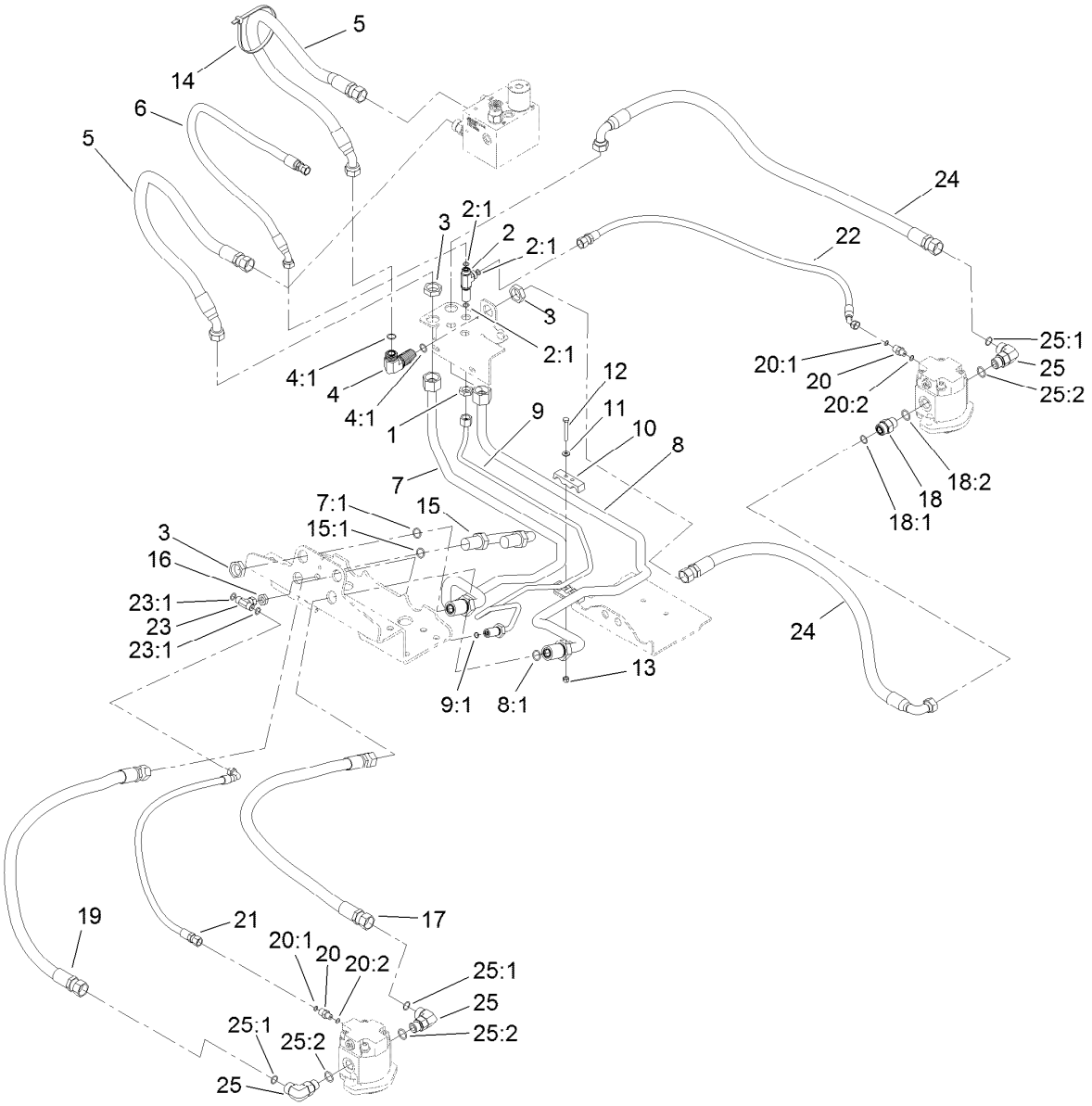

Mow Hydraulic Assembly

Ref.	Part Number	Qty.	Description
1	340-70	1	Nut-Lock
2	340-68	1	Fitting-Tee, Bulkhead
2:1	237-22	3	O-Ring
3	340-74	7	Nut-Lock, Bulkhead
4	340-72	1	Fitting-Bulkhead, 90 DEG
4:1	237-65	2	O-Ring
5	100-4879	2	Hose-HYD
6	115-3411	1	Hose-HYD
7	104-0401	1	Tube ASM
7:1	237-65	2	O-Ring
8	104-0400	1	Tube ASM
8:1	237-65	2	O-Ring
9	104-0404	1	Tube ASM
9:1	237-21	1	O-Ring
10	99-3641	2	Clamp-Tube
11	3256-22	4	Washer-Flat
12	321-11	2	Screw-HH
13	3296-42	2	Nut-Lock, NI
14	3334-945	2	Tie-Cable

Ref.	Part Number	Qty.	Description
15	99-3640	1	Tube ASM
15:1	237-65	2	O-Ring
16	340-78	1	Nut-Lock
17	105-1216	2	Hose-HYD
18	340-7	1	Fitting-Straight
18:1	237-65	1	O-Ring
18:2	237-80	1	O-Ring
19	105-1215	2	Hose-HYD
20	340-92	3	Fitting-Straight
20:1	237-78	1	O-Ring
20:2	237-21	1	O-Ring
21	104-1080	2	Hose-HYD
22	100-4876	1	Hose-HYD
23	99-3477	1	Fitting-Tee
23:1	237-42	2	O-Ring
24	100-4880	2	Hose-HYD
25	340-17	5	Fitting-Elbow, 90 DEG
25:1	237-65	1	O-Ring
25:2	237-80	1	O-Ring

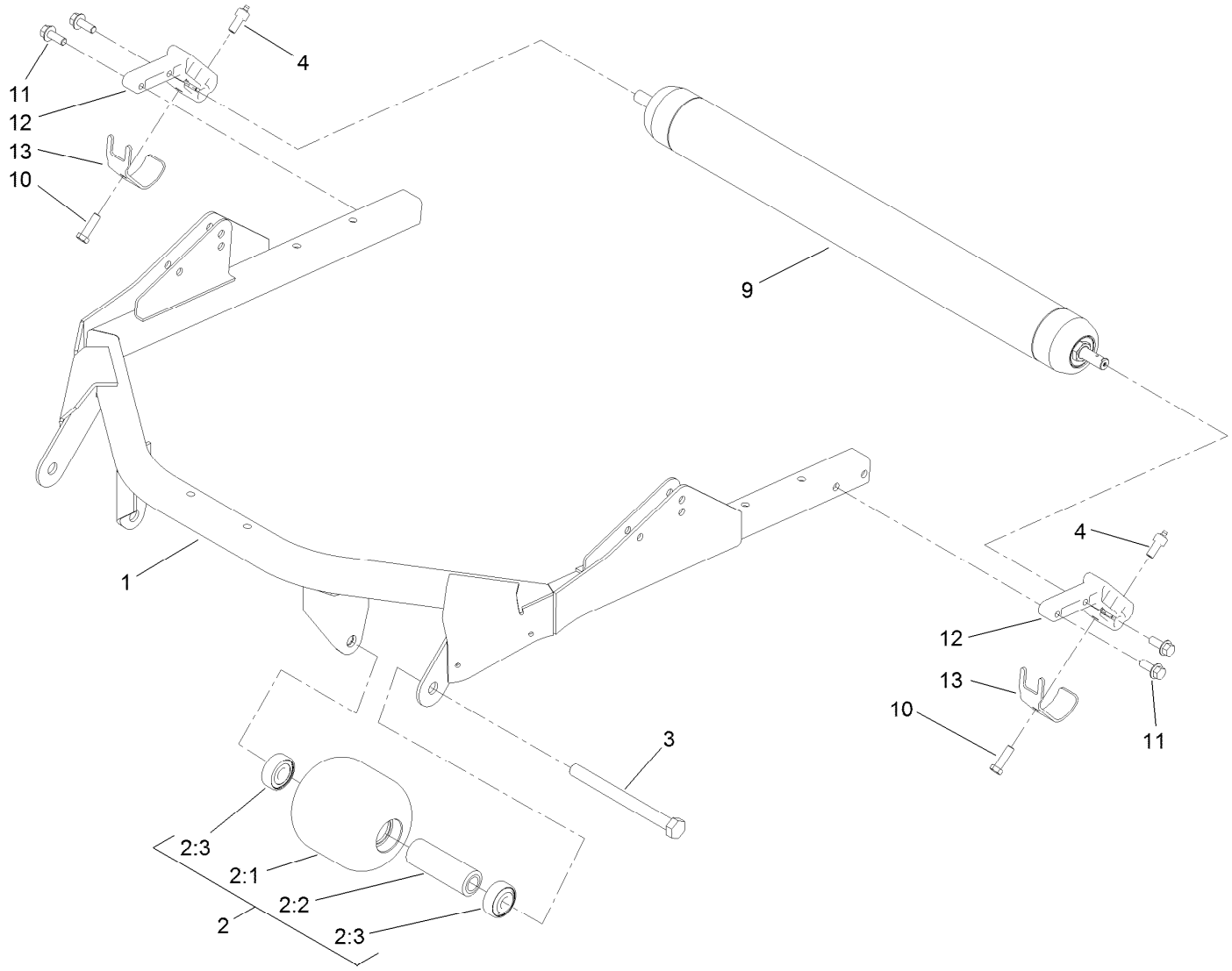

Roller and Carrier Frame Assembly

Ref.	*Part Number*	*Qty.*	*Description*
1	100-5780-03	1	Frame-Deck
2	136-2908	2	Roller ASM
2:1	104-1093	1	Roller
2:2	100-5762	1	Spacer-Bearing
2:3	120-3366	2	Bearing
3	136-2924	2	Screw-HH
4	127-6422	2	Screw-Grease, Roller
9	112-5265	1	Roller ASM
10	323-7	2	Screw-HH
11	3234-11	4	Screw-HHF
12	112-5268	2	Mount-Roller
13	107-7816	2	Bracket-Skid

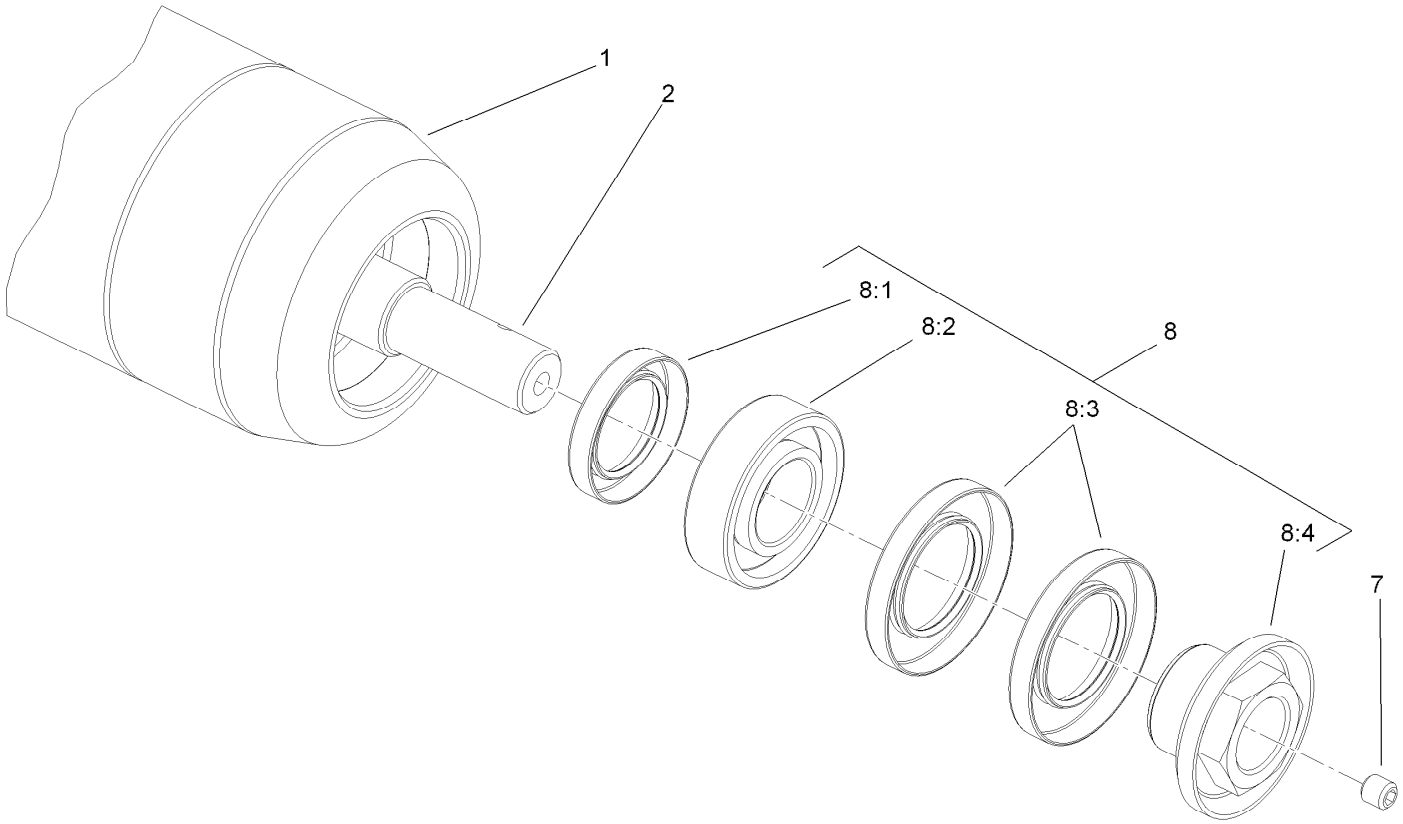

Roller Assembly No. 112-5265

Ref.	*Part Number*	*Qty.*	*Description*
1	112-5274-03	1	Tube ASM
2	117-5100	1	Shaft-Roller, Rear
7	108-0989	2	Screw-Set
8	114-5430	1	Roller Rebuild Kit
8:1	114-3717	2	Seal-Oil
8:2	112-5290	2	Bearing-Steel, Stainless
8:3	112-7494	4	Seal
8:4	114-3745	2	Nut-Lock, Bearing

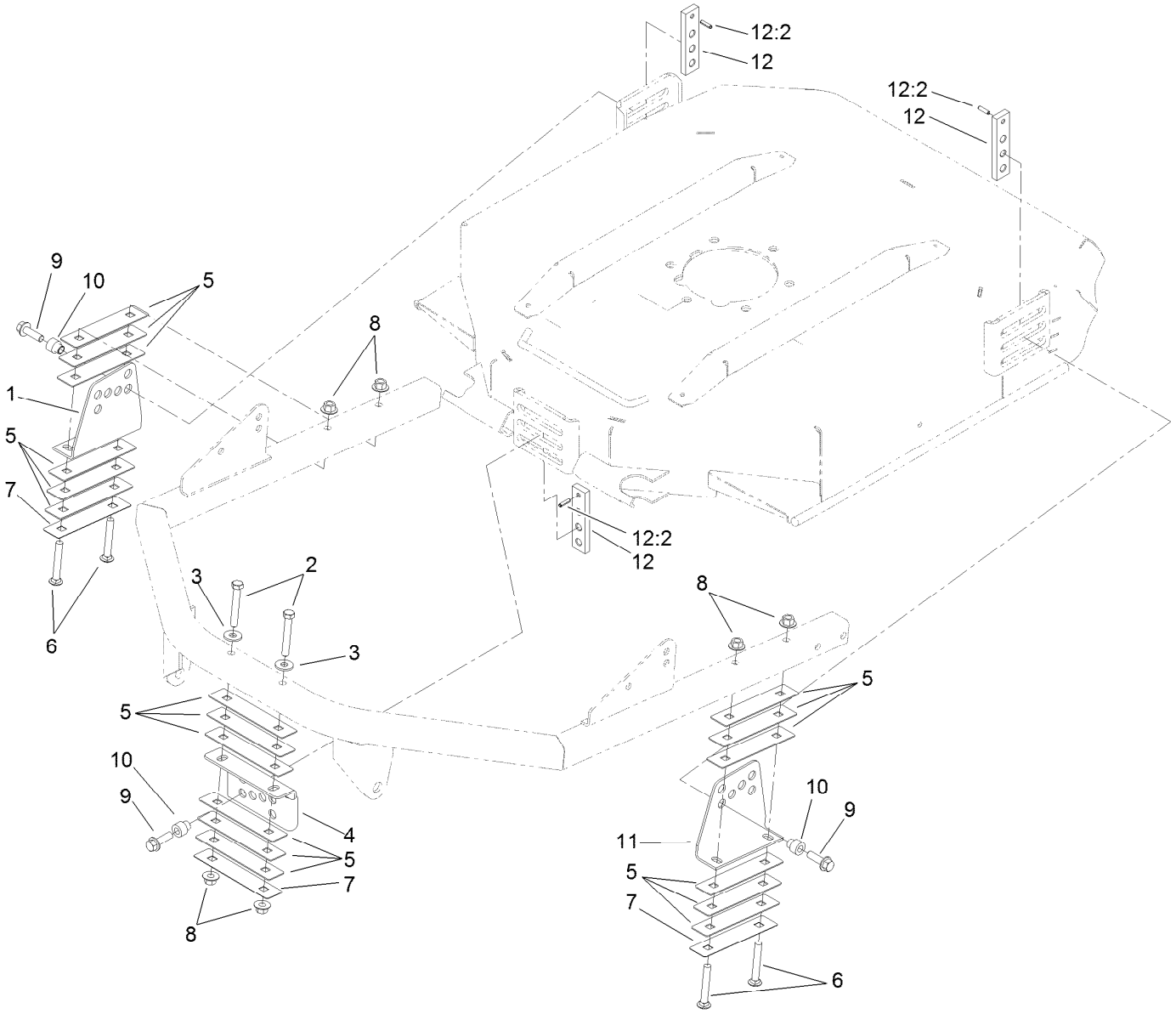

Height-of-Cut Bracket Assembly

Ref.	Part Number	Qty.	Description
1	100-5797-03	1	Bracket-HOC, RH
2	323-12	2	Screw-HH
3	80-6990	2	Washer-Hardened
4	104-1052-03	1	Bracket-HOC, Front
5	100-5799	18	Shim-HOC, .060 Inch
6	3231-9	4	Screw-CARR
7	104-4641	3	Shim-HOC, .030 Inch
8	32128-43	6	Nut-Flange
9	3234-24	3	Screw-HHF
10	121-3575	3	Spacer-HOC
11	104-4624-03	1	Bracket-HOC, LH
12	136-2921	3	HOC Plate ASM
12:2	32121-5	1	Pin-Spring

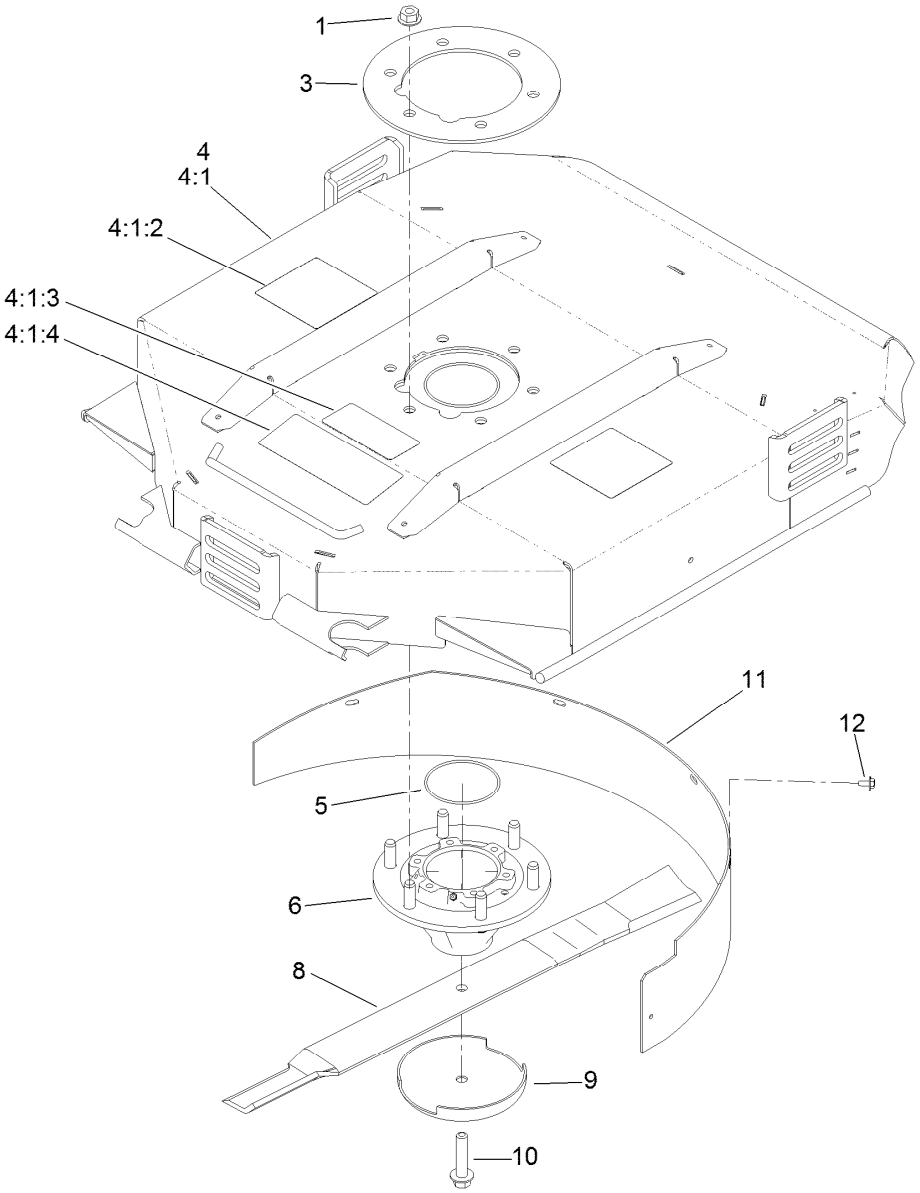

Chamber, Blade and Spindle Assembly

Ref.	Part Number	Qty.	Description
1	32128-39	6	Nut-HHF
3	104-1051-03	1	Plate-Spindle
4	127-6389	1	Deck Chamber Service ASM
4:1		1	Chamber ASM ●
4:1:2	117-4764	2	Decal-Danger
4:1:3	93-7818	1	Decal-Torque, Blade Bolt
4:1:4	121-3627	1	Decal-Height Of Cut
5	237-161	1	O-Ring
6	115-3435	1	Spindle ASM
8	107-0235-03	1	Blade-Atomic
8	108-9026-03	1	Blade-Combo
9	72-9361	1	Cup-Scalp, Anti
10	92-5816	1	Bolt-Blade
11	108-9025-01	1	Baffle-Mulching
12	46-8560	5	Screw-HHFTF

● Not serviced separately

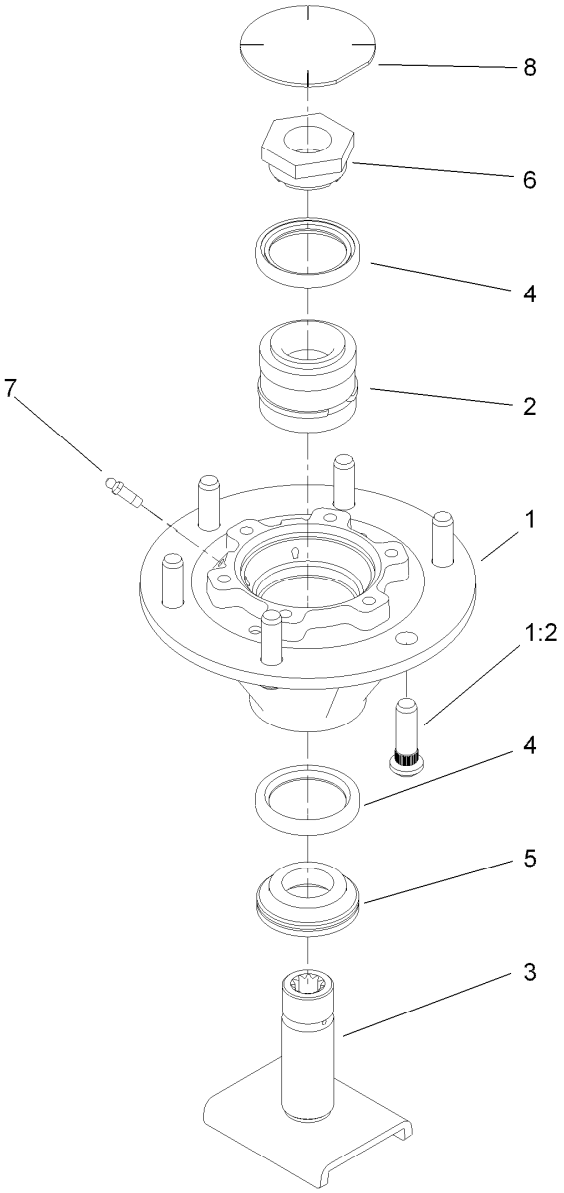

Spindle Assembly No. 115-3435

Ref.	Part Number	Qty.	Description
1	115-3434	1	Spindle
1:2	10-6830	6	Stud-Type, Drive
2	100-5703	1	Spacer And Bearing ASM
3	100-5705	1	Spindle Shaft ASM
4	253-154	2	Seal-Oil
5	69-6950	1	Spacer-Shaft, Spindle
6	100-5709	1	Nut-Spindle, Spcl
7	302-62	2	Fitting-Grease
8	94-2703	1	Plug

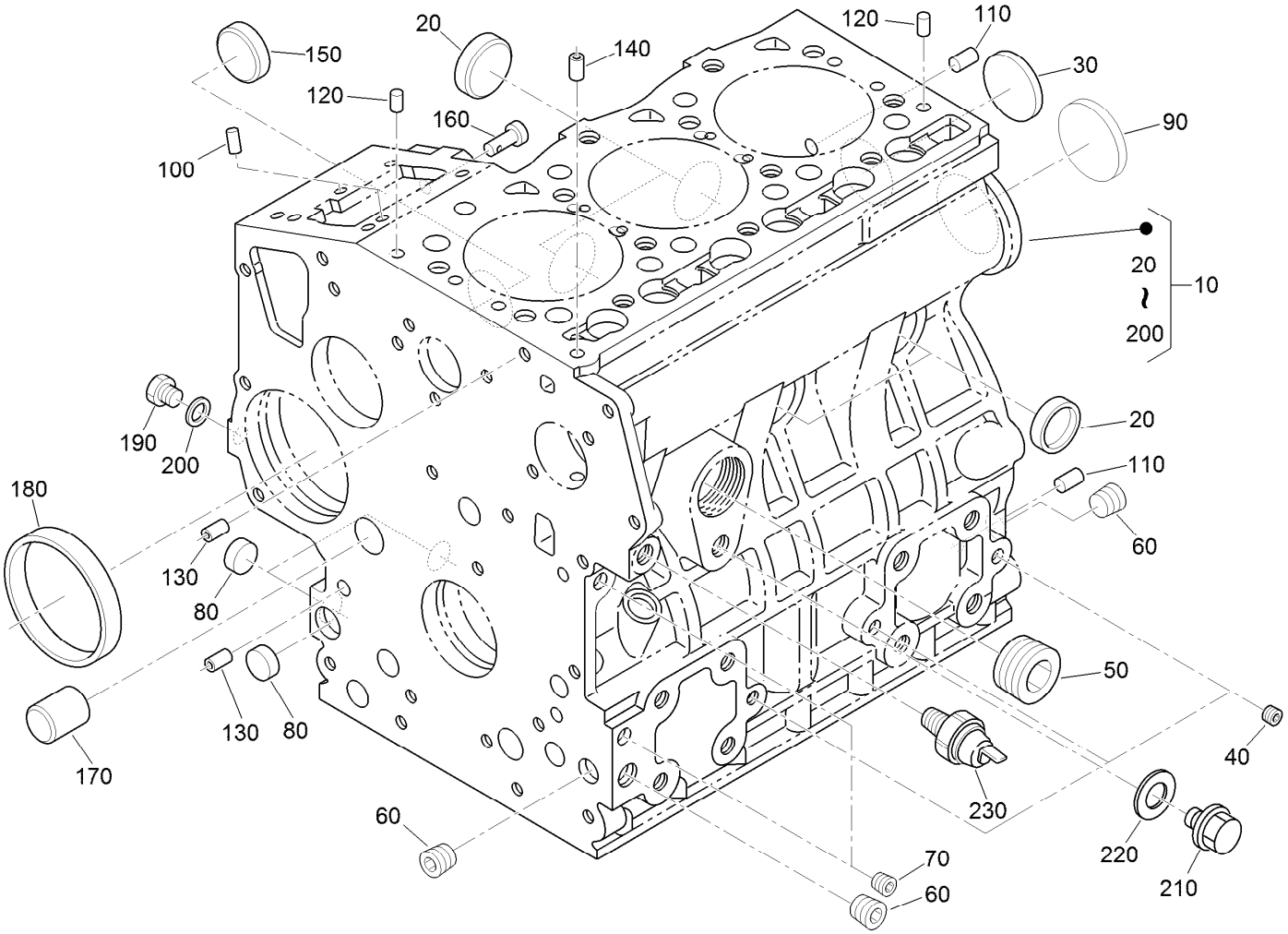

Crankcase Assembly

Ref.	Part Number	Qty.	Description
10	115-3443	1	Crankcase ASM
20	98-9398	4	Cap-Sealing
30	98-7539	1	Cap-Sealing
40	98-9687	3	Plug
50	105-3779	1	Plug
60	98-9597	3	Plug
70	98-7487	2	Plug
80	98-9379	3	Plug-Expansion
90	98-9668	1	Plug-Expansion
100	98-9375	2	Pin-Straight
110	98-9377	2	Pin-Straight
120	98-9376	2	Pin-Straight

Ref.	Part Number	Qty.	Description
130	98-9387	2	Pin-Pipe
140	98-9539	1	Pin-Pipe
150	98-9599	1	Plug
160	98-9630	1	Pin-Spring, Start
170	98-9675	1	Plug
180	98-9656	1	Bushing-Governor, Gear
190	120-2559	1	Plug
200	98-7428	1	Gasket
210	99-3447	1	Plug
220	106-7056	1	Gasket
230	98-9416	1	Switch-Oil

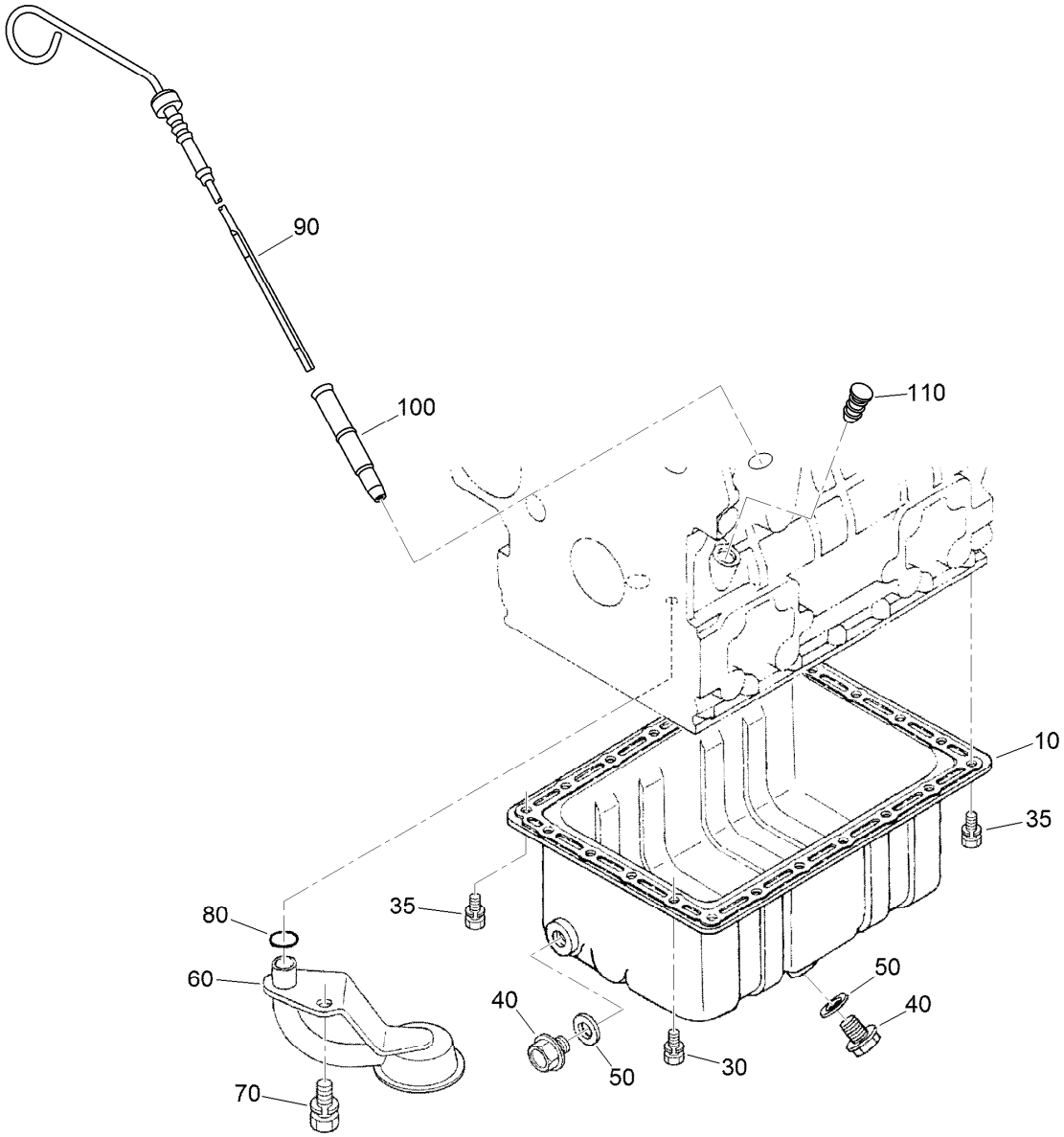

Oil Pan and Dipstick Assembly

Ref.	*Part Number*	*Qty.*	*Description*
10	98-9685	1	Pan-Oil
30	98-9351	20	Bolt
35	98-9351	2	Bolt
40	114-8151	2	Plug-Drain
50	98-7524	2	Gasket
60	108-1401	1	Base-Filter
70	98-7526	1	Bolt
80	105-3776	1	O-Ring
90	104-9348	1	Gauge-Oil
100	105-4580	1	Guide-Gauge, Oil
110	110-3720	1	Plug-Gauge, Oil

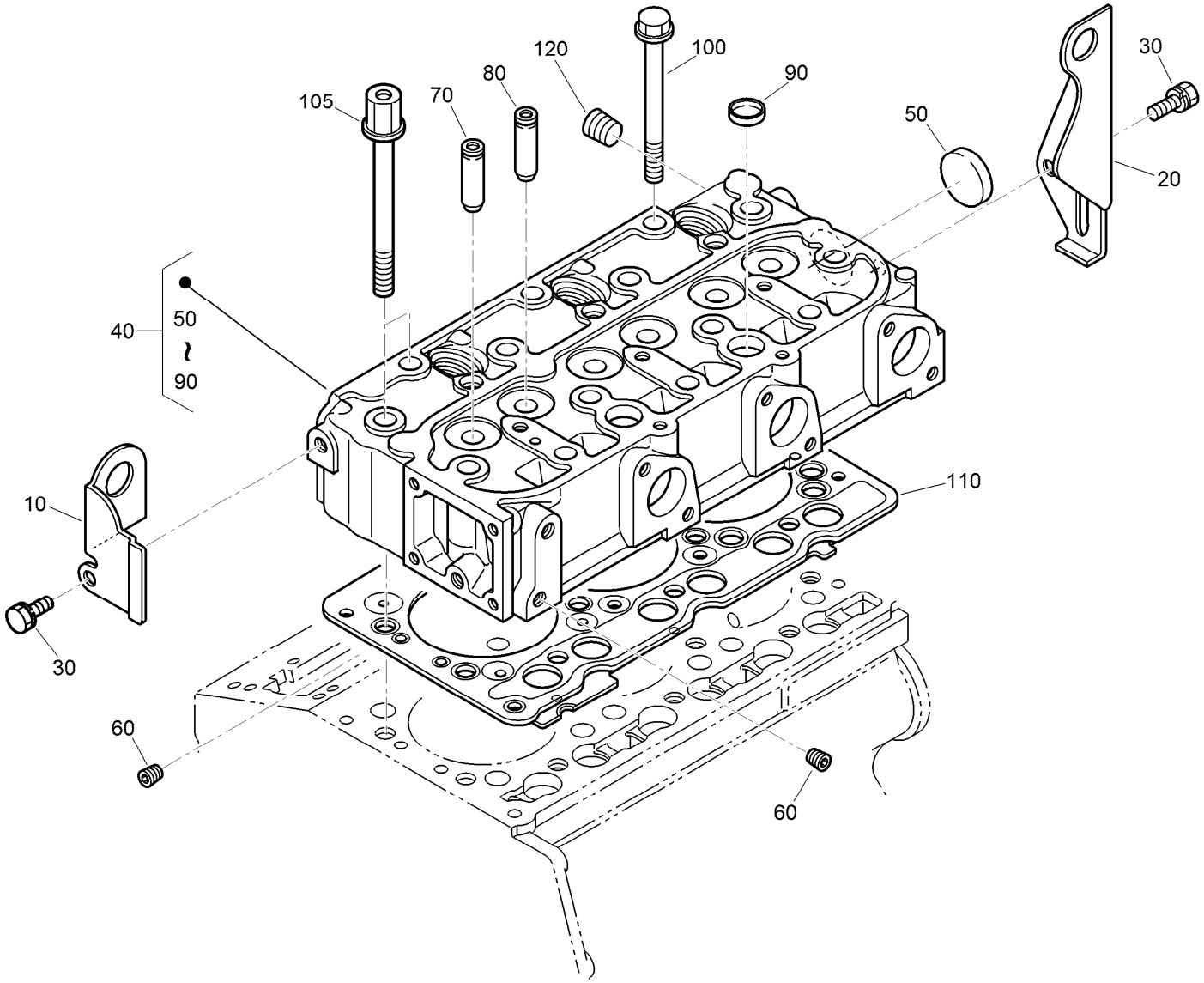

Cylinder Head Assembly

Ref.	Part Number	Qty.	Description
10	130-1231	1	Hook-Engine
20	98-9478	1	Hook-Engine
30	100-9195	2	Bolt
40	130-1544	1	Cylinder Head ASM
50	105-3705	1	Cap-Sealing
60	98-9687	2	Plug
70	107-9066	3	Guide-Valve, Inlet
80	107-9067	3	Guide-Valve, Exhaust
90	98-9389	2	Cap-Sealing
100	98-9479	12	Bolt-Head, Cylinder
105	98-9647	2	Bolt-Head, Cylinder
110	108-6573	1	Gasket-Head, Cylinder
120	98-9444	1	Plug

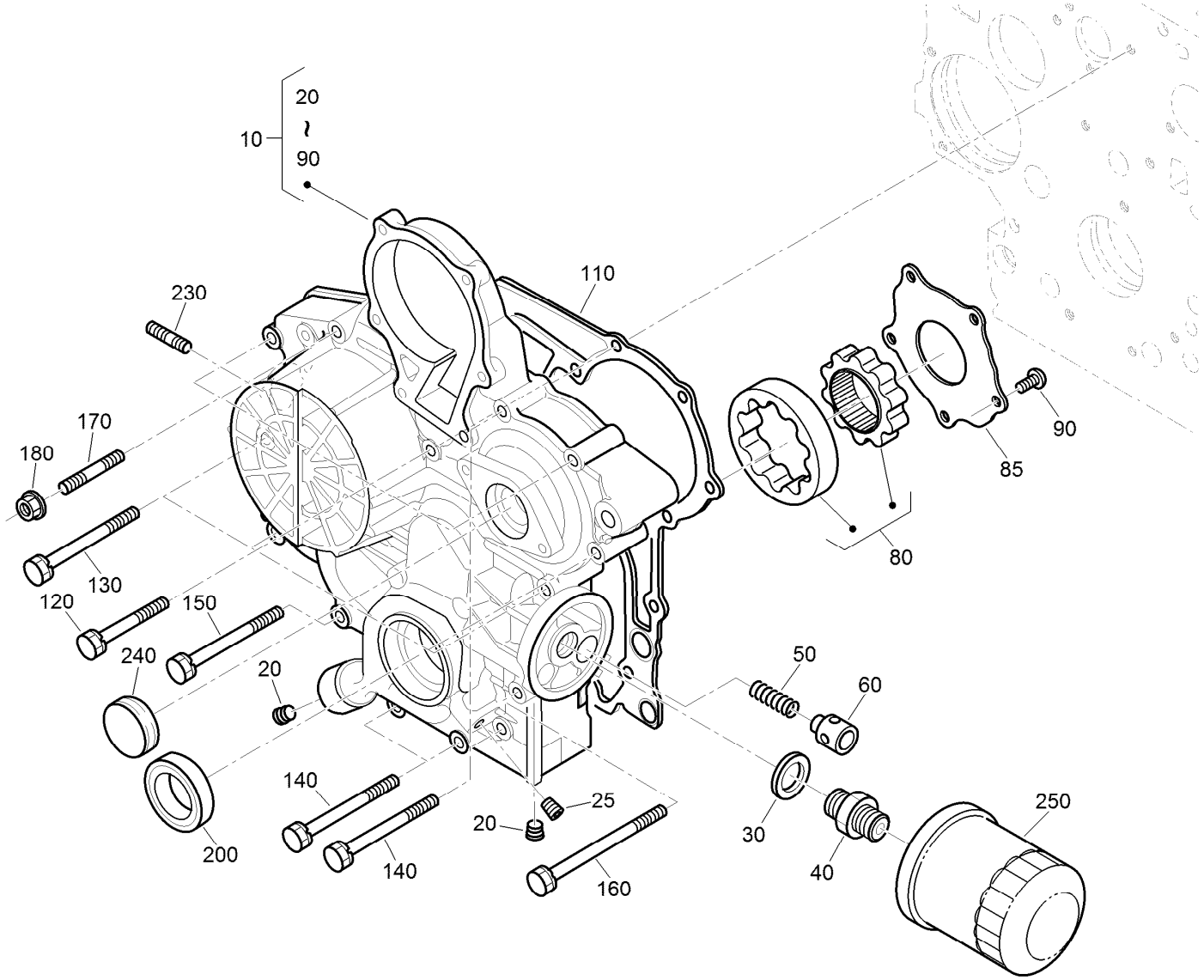

Gear Case and Oil Filter Cartridge Assembly

Ref.	Part Number	Qty.	Description
10	115-4105	1	Gear Case ASM
20	127-0425	2	Plug
25	98-7487	1	Plug
30	98-7562	1	Washer-Plain
40	98-9388	1	Joint-Pipe
50	130-1511	1	Spring
60	130-1510	1	Valve-Relief
80	130-1508	1	Rotor ASM
85	130-1509	1	Cover-Pump, Oil
90	130-1164	5	Screw-Binding
110	98-9633	1	Gasket-Case, Gear

Ref.	Part Number	Qty.	Description
120	100-1765	3	Bolt
130	125-9063	4	Bolt-Sems
140	98-9356	4	Bolt
150	107-9074	1	Bolt
160	98-9586	1	Bolt
170	105-3709	1	Stud
180	100-2203	1	Nut-Flange
200	119-8038	1	Seal-Oil
230	105-3710	2	Stud
240	99-3515	1	Plug-Gearcase
250	108-3841	1	Filter-Oil

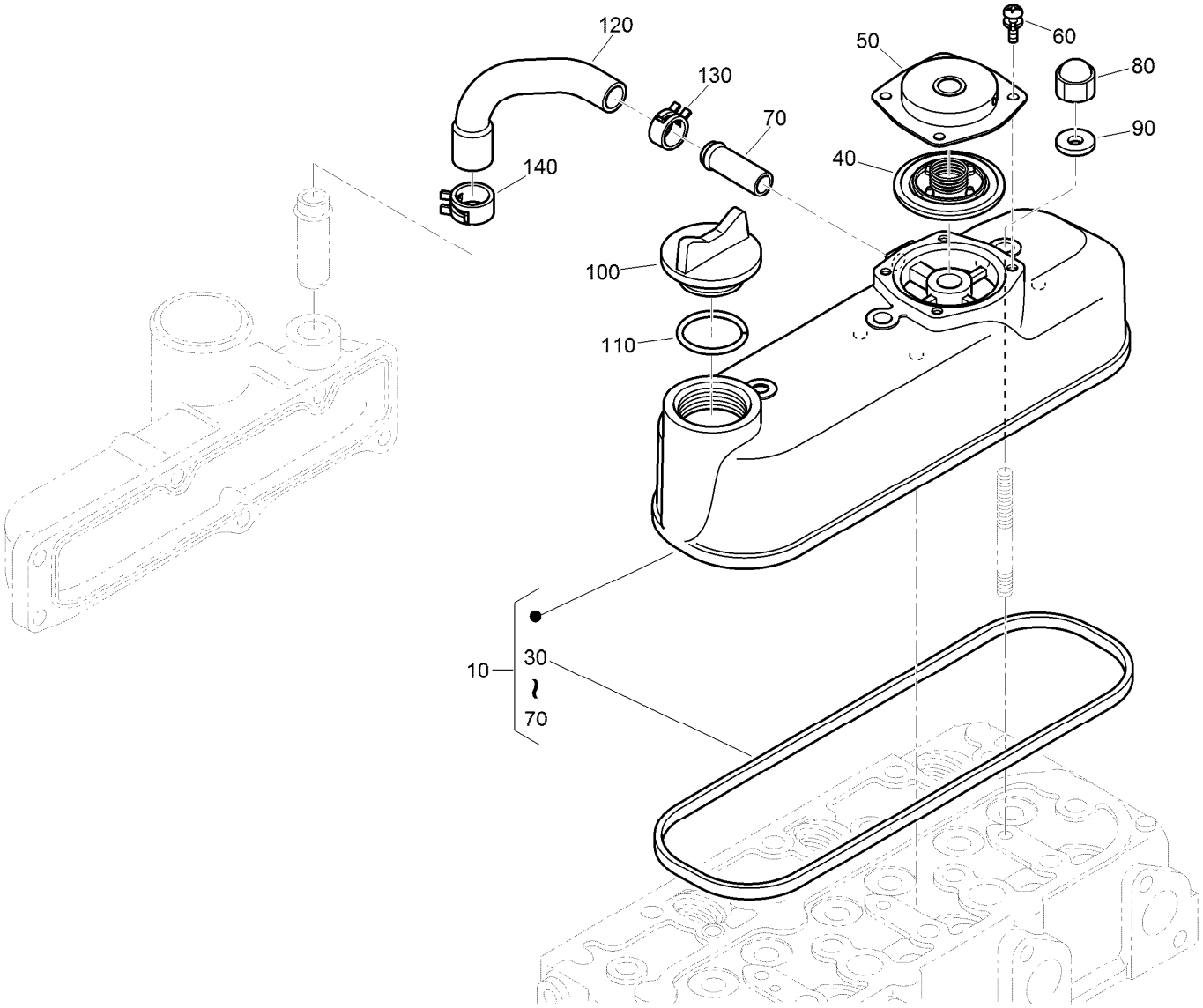

Cylinder Head Cover Assembly

Ref.	*Part Number*	*Qty.*	*Description*
10	130-1372	1	Cylinder Head Cover ASM
30	98-9615	1	Gasket-Cover, Head
40	110-3715	1	Valve-Breather
50	110-3714	1	Cover-Breather
60	98-9364	4	Screw (With Washer)
70	98-7766	1	Pipe-Return, Water
80	98-9455	3	Nut-Cap
90	98-9454	3	Gasket
100	107-9075	1	Plug-Filler, Oil
110	99-3446	1	O-Ring
120	107-7836	1	Tube-Breather
130	108-2859	1	Clamp-Hose
140	108-2860	1	Clamp-Hose

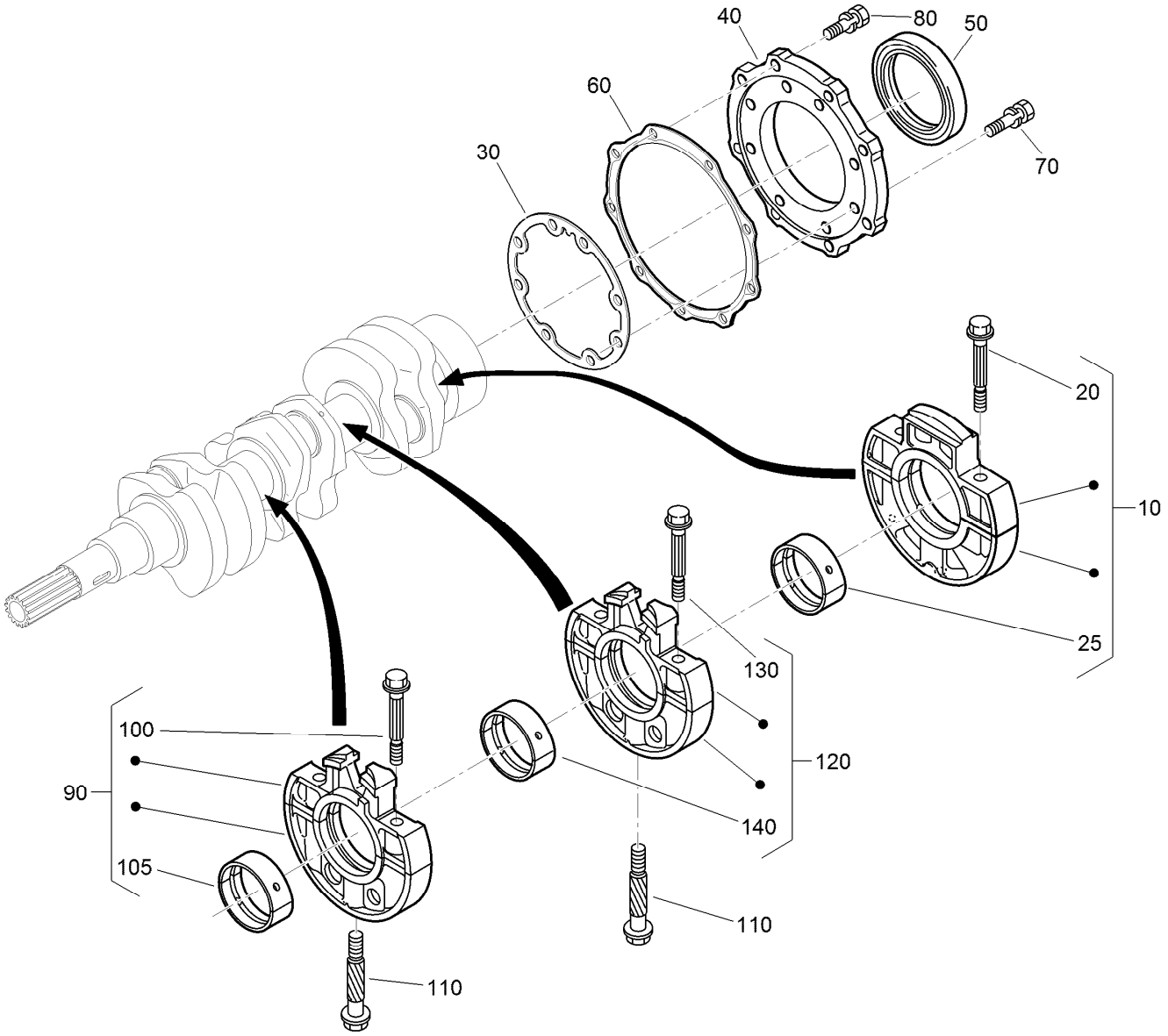

Main Bearing Case Assembly

Ref.	Part Number	Qty.	Description
10	112-7026	1	Wheel Bearing Case ASM
20	98-9484	2	Bolt-Case, Bearing
25	115-4121	1	Metal-Crankshaft (STD)
25	112-7039	1	Metal-Crankshaft (0.2Mm)
25	112-7040	1	Metal-Crankshaft (-0.4Mm)
30	127-0440	1	Gasket-Case, Bearing
40	112-7046	1	Cover-Case, Bearing
50	112-0180	1	Seal-Oil
60	112-7037	1	Gasket-Cover, Case
70	127-0441	8	Bolt
80	127-0442	9	Bolt

Ref.	Part Number	Qty.	Description
90	115-4106	1	Main Bearing Case ASM
100	98-9484	2	Bolt-Case, Bearing
105	98-9524	1	Metal-Crankshaft (STD Set)
105	127-0433	1	Metal-Crankshaft (-0.2MM)
105	98-9531	1	Bearing-Main (0.4MM)
110	98-9485	2	Bolt-Case, Bearing
120	115-4107	1	Main Bearing Case ASM
130	98-9484	2	Bolt-Case, Bearing
140	98-9524	1	Metal-Crankshaft (STD Set)
140	127-0433	1	Metal-Crankshaft (-0.2MM)
140	98-9531	1	Bearing-Main (0.4MM)

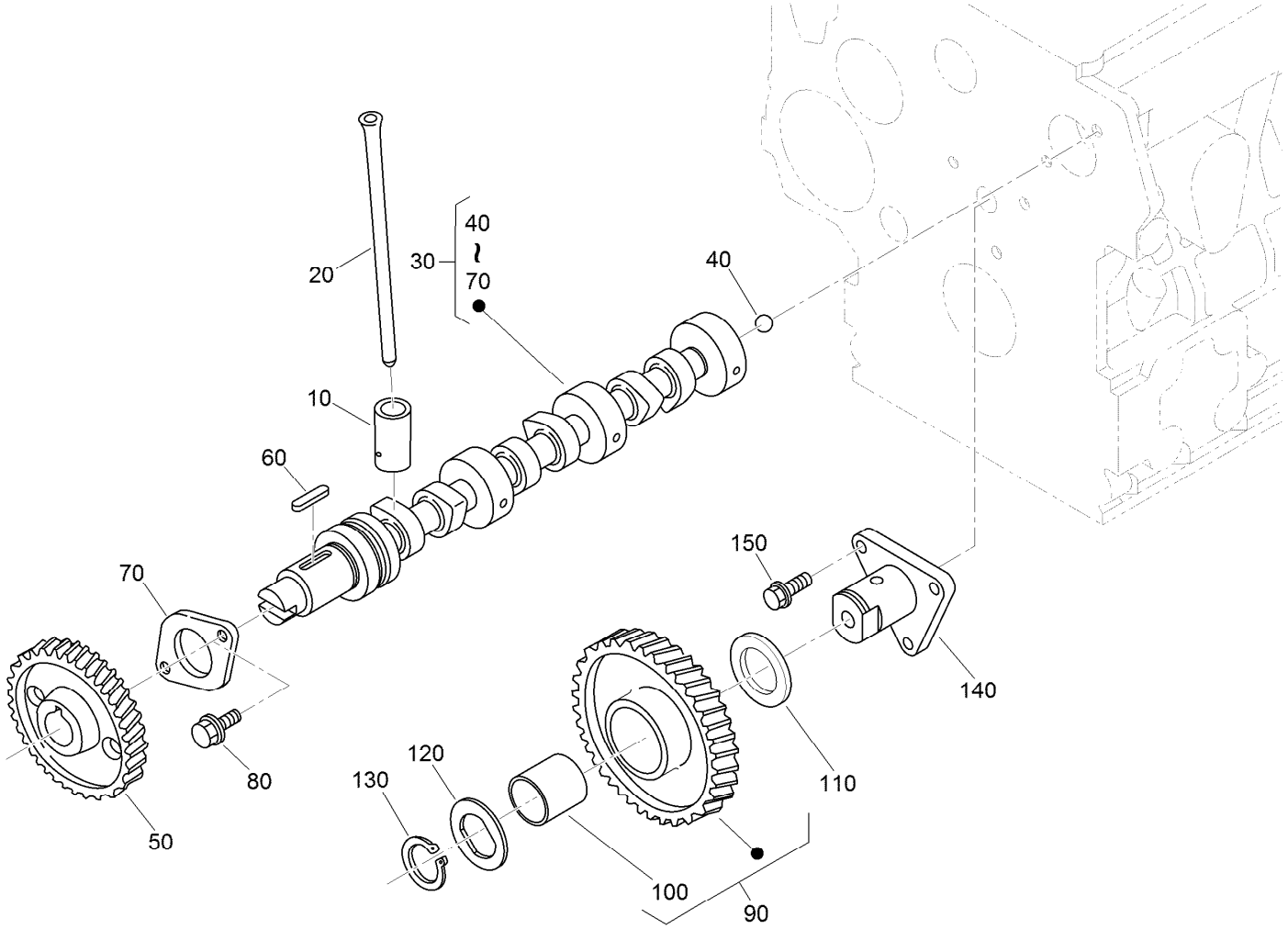

Camshaft and Idle Gear Shaft Assembly

Ref.	*Part Number*	*Qty.*	*Description*
10	112-0185	6	Tappet
20	127-0421	6	Rod-Push
30	130-1545	1	Camshaft ASM
40	110-3729	1	Ball
50	98-9512	1	Gear-Cam
60	98-9378	1	Key-Feather
70	98-9510	1	Stopper-Camshaft
80	98-7692	2	Bolt
90	117-7584	1	Idler Gear ASM
100	117-7585	1	Bushing-Gear, Idle
110	98-9535	1	Collar-Gear, Idle
120	98-9536	1	Collar-Gear, Idle
130	98-9534	1	Circlip-Gear, Idle
140	98-9533	1	Shaft-Gear, Idle
150	98-7692	3	Bolt

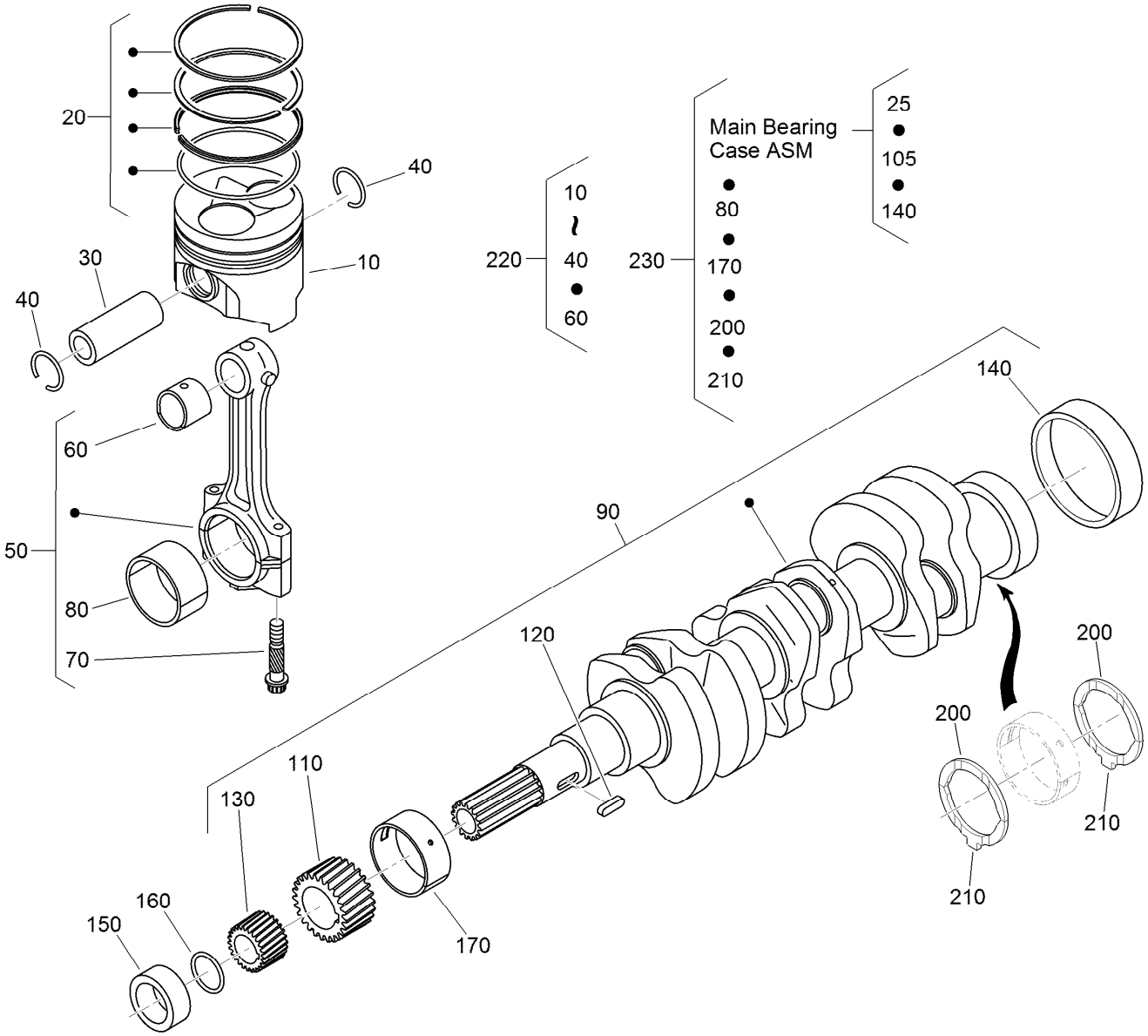

Piston and Crankshaft Assembly

Ref.	Part Number	Qty.	Description
10	130-1546	3	Piston (STD)
10	130-1549	3	Piston (+0.50MM)
20	130-1506	3	Piston Ring ASM (STD)
20	130-1507	3	Piston Ring ASM (+0.50MM)
30	98-9513	3	Pin-Piston
40	98-9514	6	Circlip-Pin, Piston
50	117-7586	3	Connecting Rod ASM
60	115-3014	3	Bushing-Pin, Piston
70	98-9517	6	Bolt-Rod, Connecting
80	98-9553	3	Bearing-Rod (STD)
80	98-9519	3	Bearing-Rod (-0.2MM)
80	117-7588	3	Metal-Crankpin (-0.4MM)
90	130-1375	1	Crankshaft ASM
110	117-7561	1	Gear-Crankshaft
120	98-9666	1	Key
130	127-0445	1	Gear-Drive, Oil Pump
140	98-9522	1	Sleeve-Crankshaft
150	127-0444	1	Collar-Crankshaft

Ref.	Part Number	Qty.	Description
160	105-3783	1	O-Ring
170	112-7005	1	Bearing-Main (STD)
170	98-9528	1	Bearing-Main (-0.2MM)
170	130-1274	1	Metal-Crankshaft (-0.40Mm)
200	98-9413	2	Bearing-Thrust (STD)
200	127-0416	2	Metal-Side (+0.2Mm)
200	127-0417	2	Metal-Side (+0.40Mm)
210	98-9688	2	Bearing-Thrust (STD)
210	127-0437	2	Metal-Side (+0.2MM)
210	127-0438	2	Metal-Side (+0.40MM)
220	130-1547	3	Piston Kit
220	130-1548	3	Piston Kit
230	130-1501	1	Engine Metal Kit (STD)
230	130-1498	1	Engine Metal Kit (-0.20Mm/+0.20Mm)
230	130-1499	1	Engine Metal Kit (-0.40Mm/+0.40Mm)

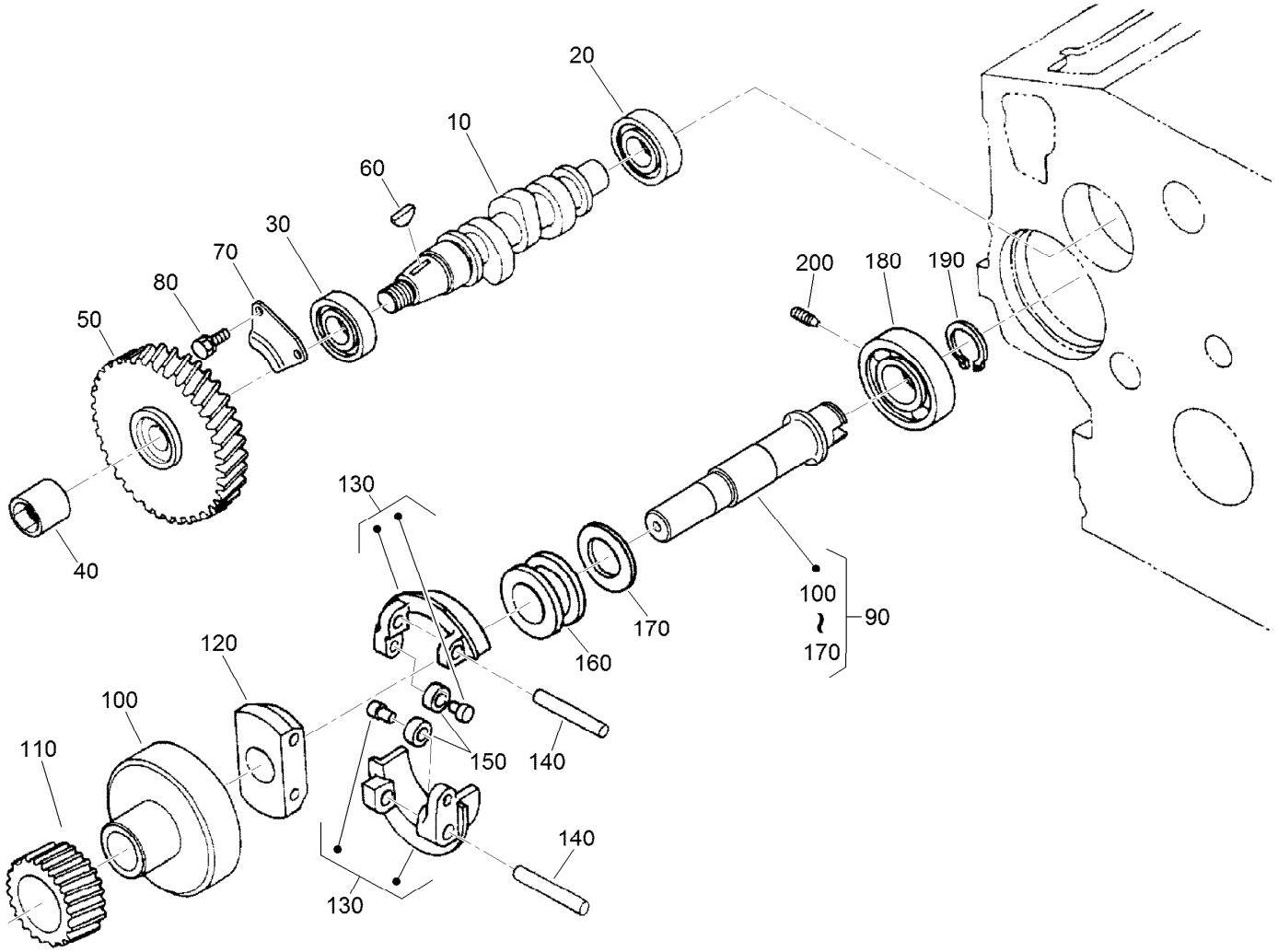

Fuel Camshaft and Governor Shaft Assembly

Ref.	Part Number	Qty.	Description
10	98-9459	1	Camshaft-Fuel
20	107-9077	1	Bearing-Ball
30	107-9078	1	Bearing-Ball
40	130-1512	1	Nut
50	120-2562	1	Gear-Pump, Injection
60	98-9595	1	Key-Woodruff
70	98-9511	1	Stopper-Fuel, Camshaft
80	98-7692	2	Bolt
90	130-1255	1	Governor Shaft ASM
100	98-9562	1	Holder-Gear, Governor

Ref.	Part Number	Qty.	Description
110	98-9673	1	Gear-Governor
120	98-9561	1	Holder-Weight, Governor
130	130-1240	2	Governor Weight ASM
140	98-9560	2	Shaft-Weight, Governor
150	98-9692	2	Roller
160	98-9563	1	Sleeve-Governor
170	98-9564	1	Washer-Thrust
180	107-9079	1	Bearing-Ball
190	98-9657	1	Circlip-Shaft, Governor
200	98-9565	1	Screw-Set

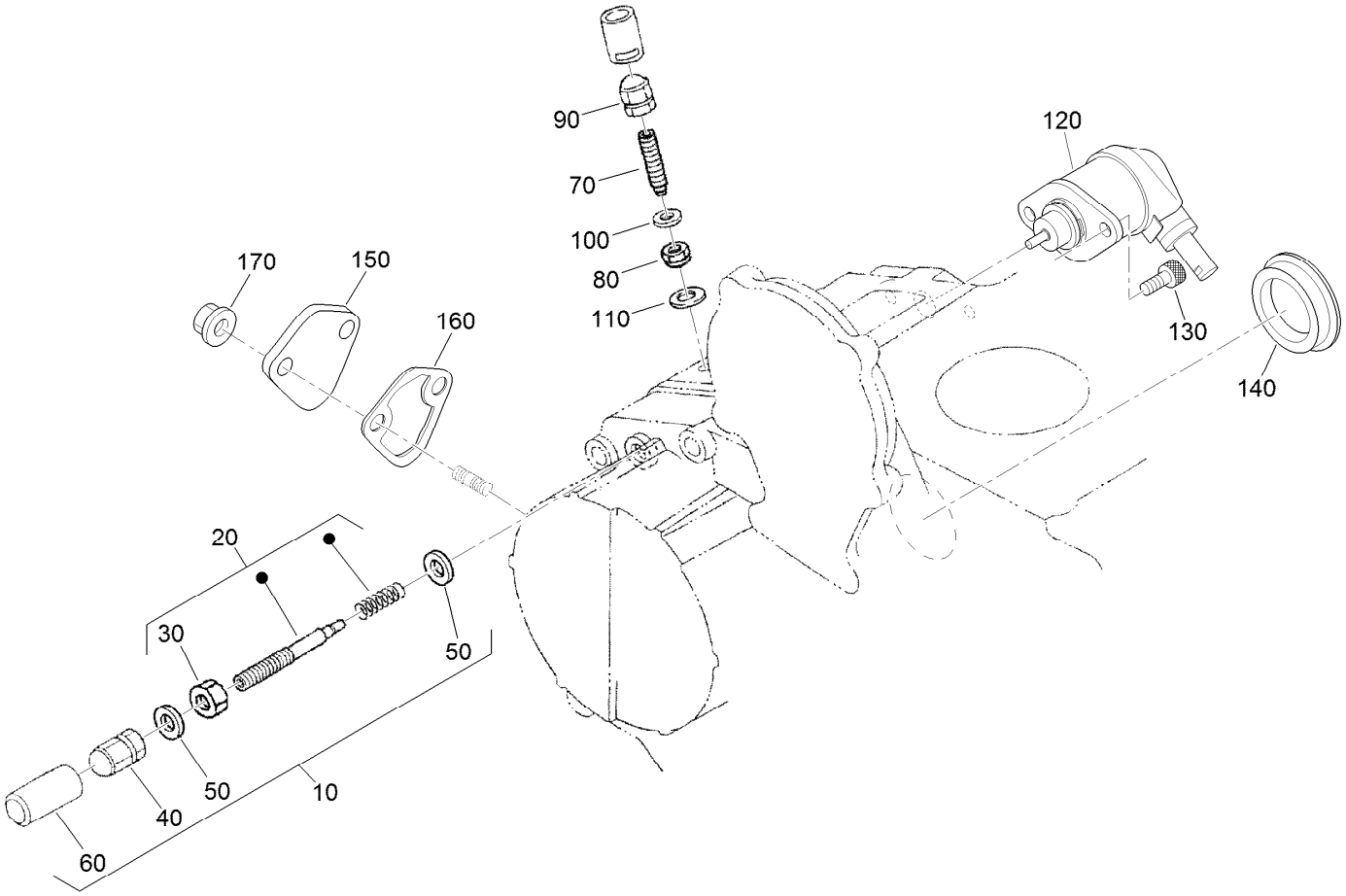

Idle Apparatus and Stop Solenoid Assembly

Ref.	Part Number	Qty.	Description
10	98-9678	1	Idle Apparatus ASM
20	112-7014	1	Adjusting Bolt ASM
30	98-9439	1	Nut
40	112-0181	1	Nut
50	98-7654	2	Gasket
60	98-7656	1	Cap
70	112-7015	1	Bolt-Adjusting
80	100-2175	1	Nut-Lock
90	112-0181	1	Nut

Ref.	Part Number	Qty.	Description
100	98-7654	1	Gasket
110	107-9081	1	Gasket
120	104-5155	1	Solenoid-Stop
130	130-1155	2	Screw-HSH
140	112-7016	1	Cover-Pump
150	99-3514	1	Cover
160	117-7562	1	Gasket-Pump, Fuel
170	100-2203	2	Nut-Flange

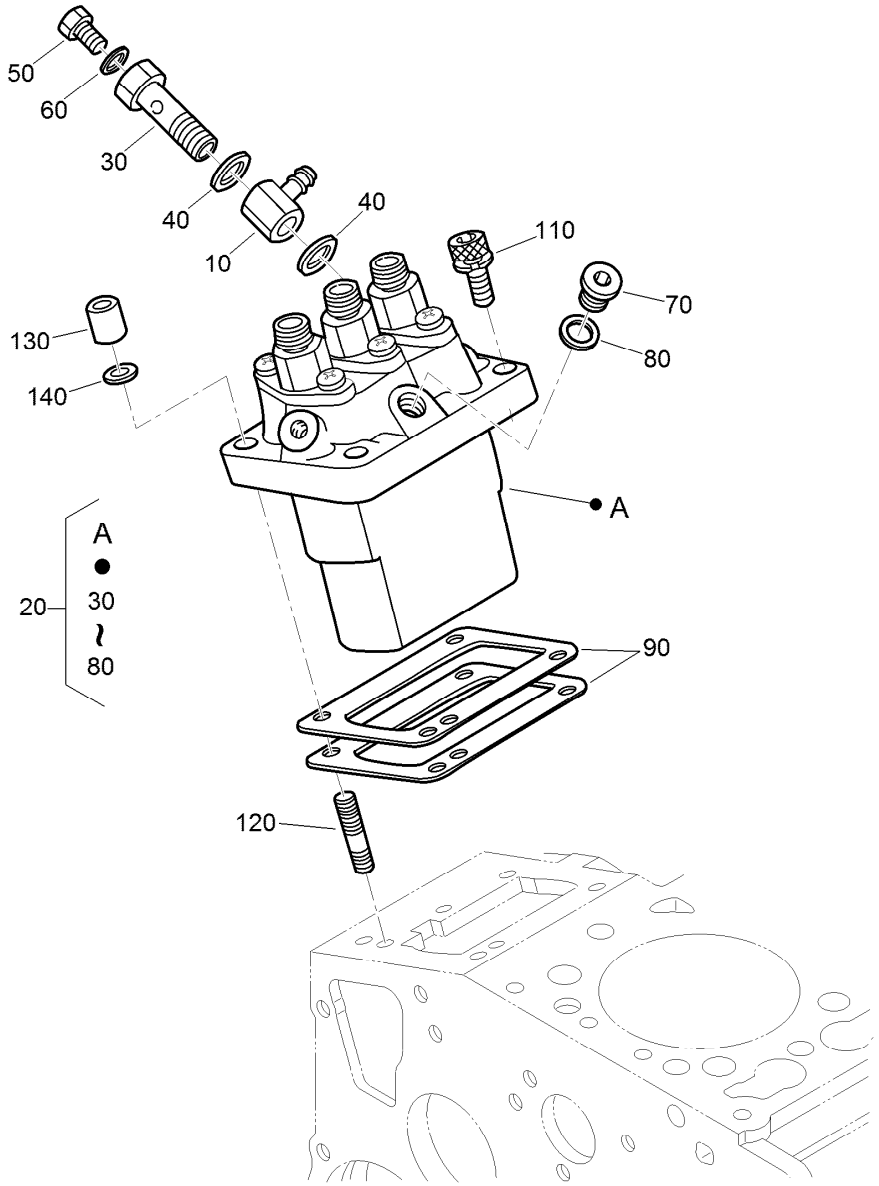

Injection Pump Assembly

Ref.	Part Number	Qty.	Description
10	98-9596	1	Joint-Eye
20	98-9643	1	Injection Pump ASM
30	98-9464	1	Bolt-Joint
40	98-9445	2	Gasket
50	98-9430	1	Screw
60	98-9446	1	Gasket
70	98-9466	1	Plug
80	98-9451	1	Gasket
90	98-9456	1	Shim-Injection (0.20MM)

Ref.	Part Number	Qty.	Description
90	98-9457	1	Shim-Injection (0.25MM)
90	98-9458	1	Shim-Injection (0.30MM)
90	115-3046	1	Shim-Injection (0.35MM)
90	115-3045	1	Shim-Injection (0.175MM)
110	117-7564	2	Bolt-Hex Soc HD
120	98-9438	2	Stud
130	98-9440	2	Nut-Cap
140	98-7699	2	Washer-Spring

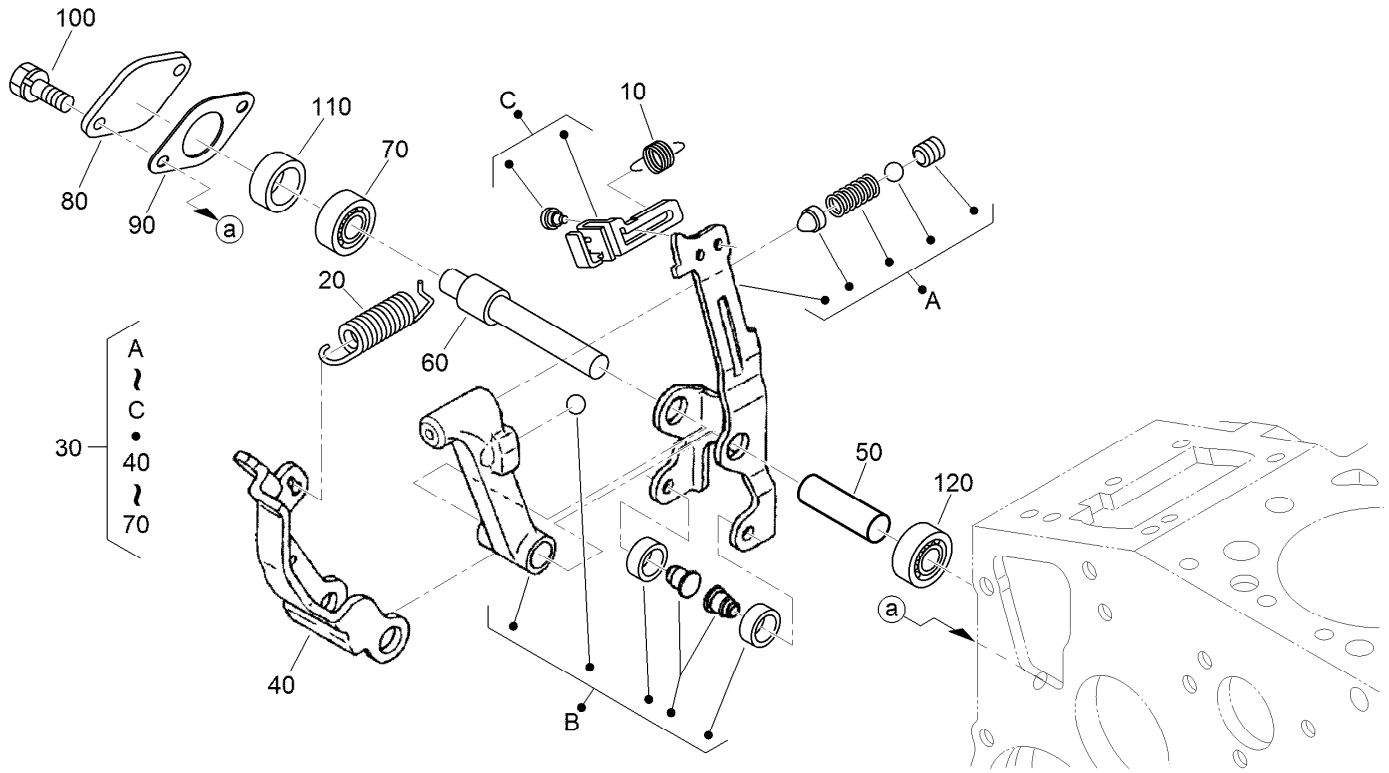

Governor Assembly

Ref.	Part Number	Qty.	Description
10	105-3786	1	Spring-Start
20	98-9681	1	Spring-Governor
30	115-4502	1	Fork Lever ASM
40	107-9084	1	Lever-Fork
50	107-9085	1	Shaft-Lever, Fork
60	107-9086	1	Shaft-Lever, Fork
70	98-9570	1	Bearing-Miniaturize
80	115-4122	1	Cover-Shaft, Fork Lever
90	98-9682	1	Gasket
100	98-9350	2	Bolt
110	98-9567	1	Collar
120	98-9571	1	Bearing-Miniaturize

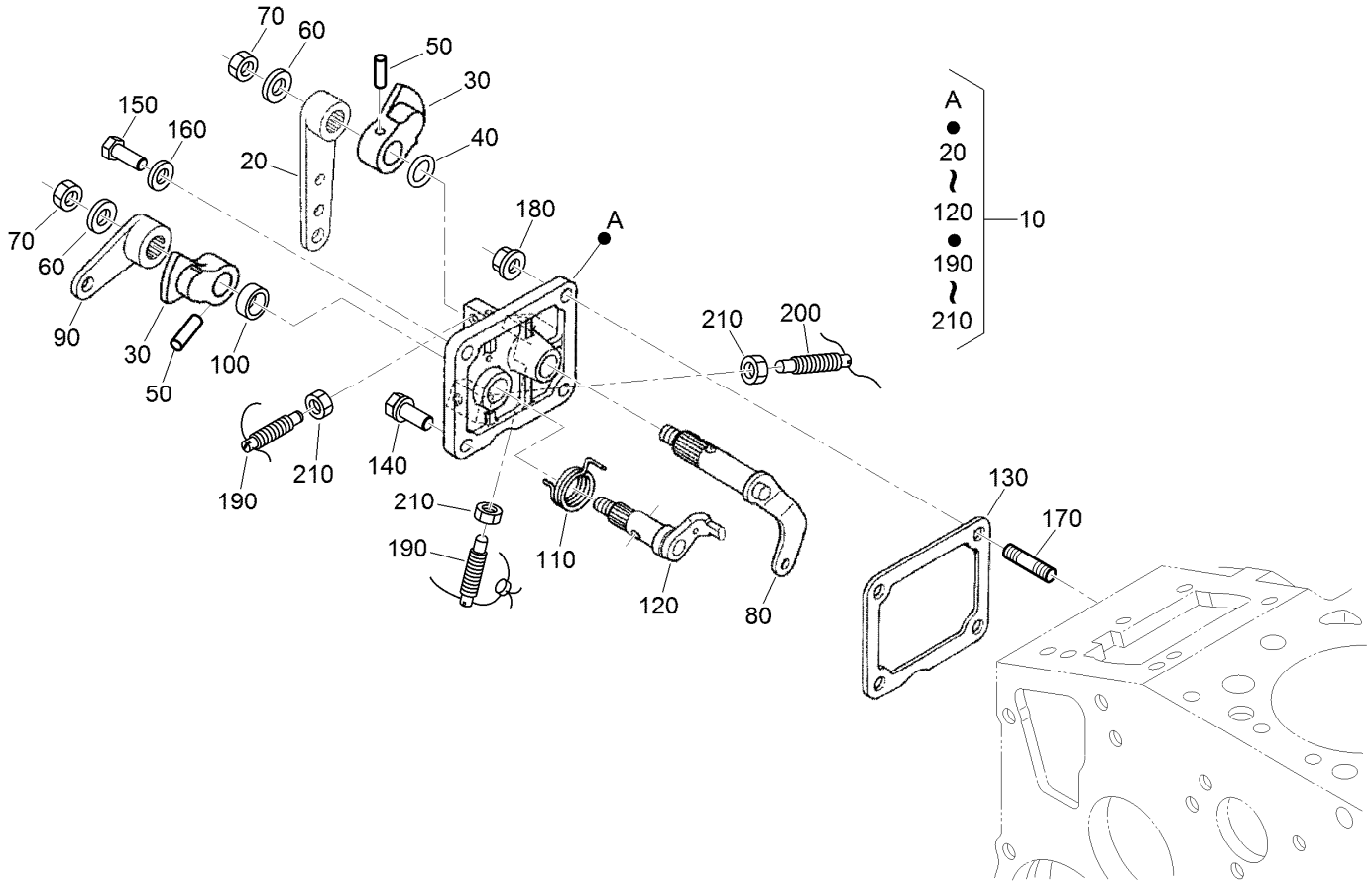

Speed Control Plate Assembly

Ref.	Part Number	Qty.	Description
10	105-3735	1	Control Plate ASM
20	98-9662	1	Lever-Control, Speed
30	98-9572	2	Lever-Control, Speed
40	105-3788	1	O-Ring
50	98-7602	2	Pin-Spring
60	98-9594	2	Washer-Plain
70	98-9589	2	Nut
80	98-9658	1	Governor Lever ASM
90	98-9663	1	Lever-Stop, Engine
100	98-7601	1	Seal-Oil
110	98-9472	1	Spring-Return

Ref.	Part Number	Qty.	Description
120	98-9664	1	Shaft-Lever, Stop
130	98-9637	1	Gasket
140	98-7692	1	Bolt
150	127-0401	1	Bolt-Hex
160	98-7654	1	Gasket
170	105-3710	2	Stud
180	100-2203	2	Nut-Flange
190	117-7565	2	Bolt-Adjusting
200	117-7566	1	Bolt-Adjusting
210	98-7572	3	Nut

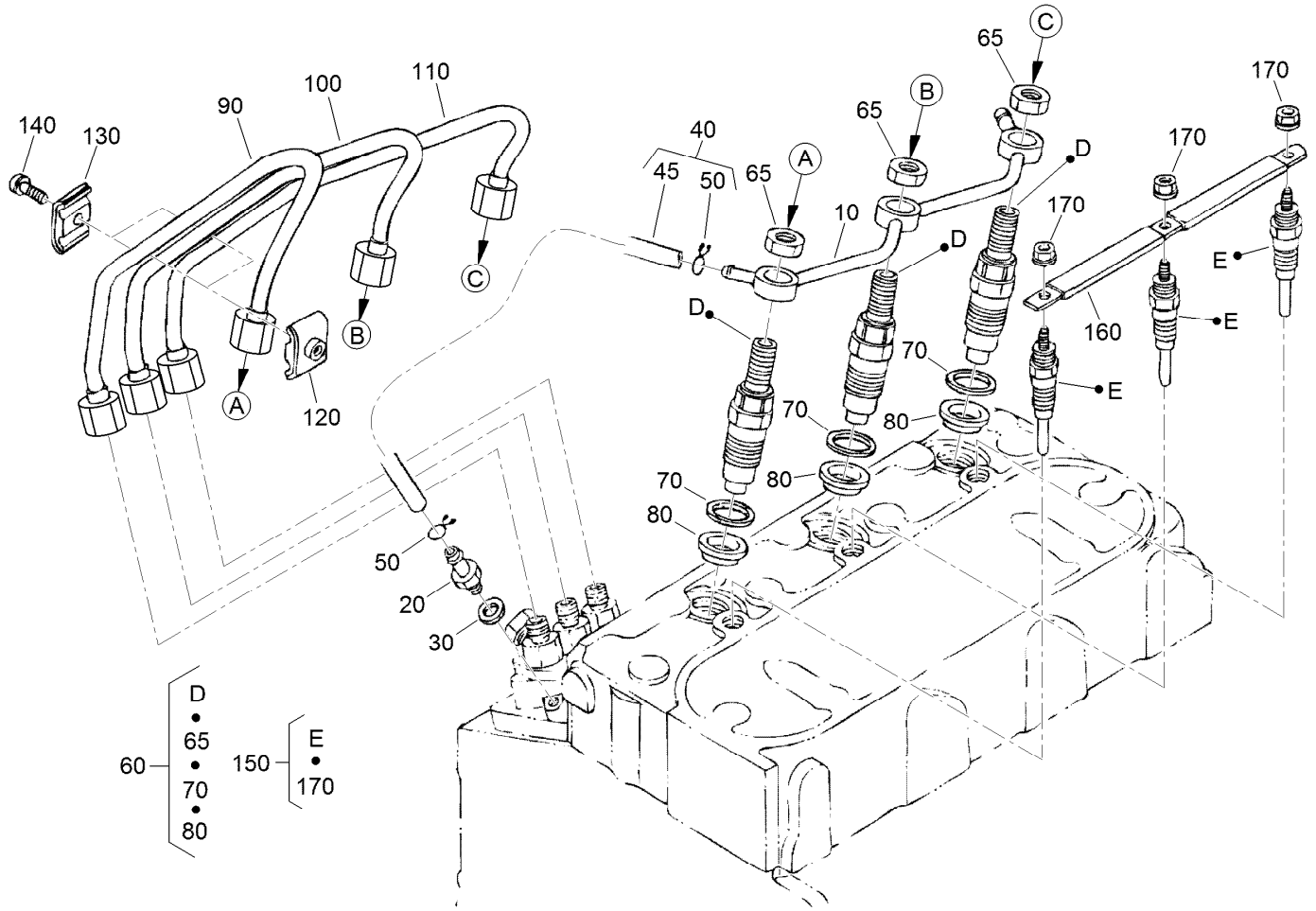

Nozzle Holder and Glow Plug Assembly

Ref.	Part Number	Qty.	Description
10	98-9620	1	Overflow Pipe ASM
20	98-9431	1	Screw-Bleeder, Air
30	98-7654	1	Gasket
40	98-9420	1	Overflow Pipe ASM
45	112-0182	1	Pipe-Overflow
50	98-7671	2	Clip-Pipe
60	115-3018	3	Nozzle Holder Kit
65	121-2411	3	Nut
70	98-7676	3	Gasket
80	98-7677	3	Seal-Heat

Ref.	Part Number	Qty.	Description
90	98-9622	1	Pipe-Injection
100	98-9654	1	Pipe-Injection
110	98-9655	1	Pipe-Injection
120	98-7682	2	Clamp-Pipe
130	98-7683	2	Clamp-Pipe
140	98-7684	2	Screw (W/Washer)
150	130-1411	3	Plug-Glow
160	98-9631	1	Cord-Plug, Glow
170	99-8377	3	Nut-Flange

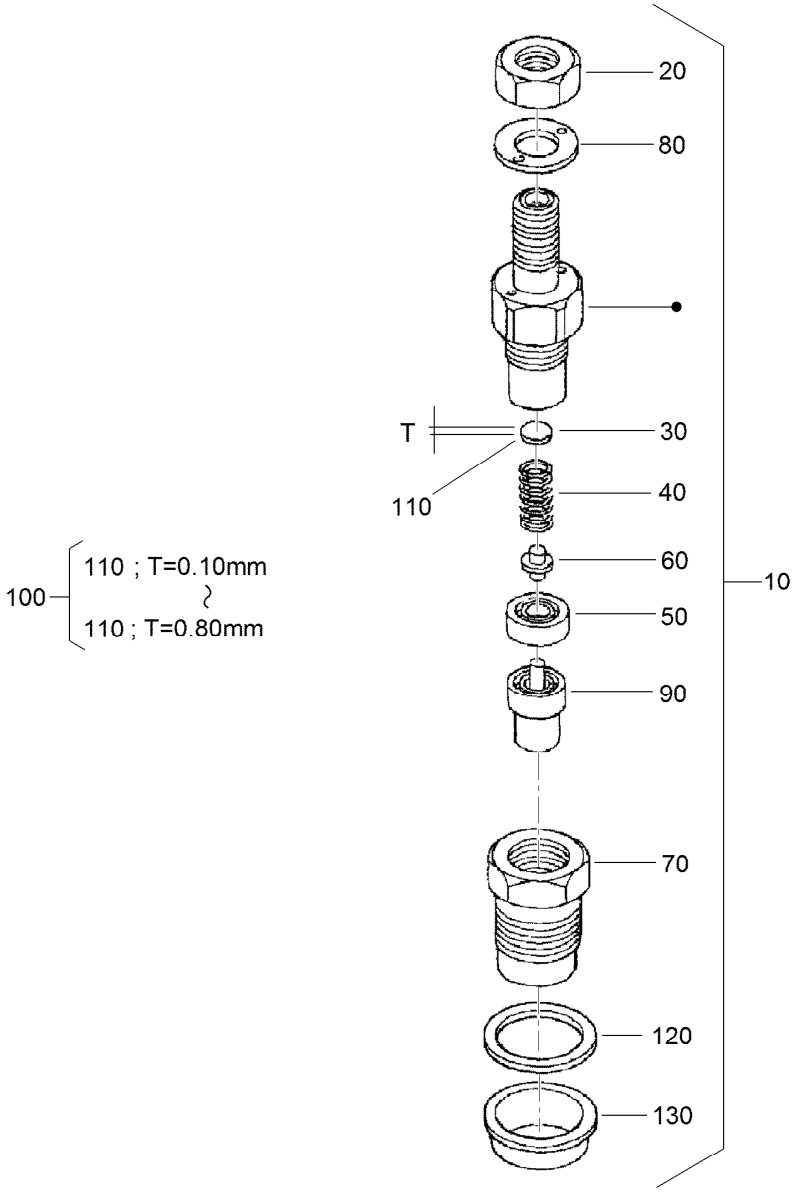

Nozzle Holder Assembly

Ref.	Part Number	Qty.	Description
10	115-3018	3	Nozzle Holder Kit
20	121-2411	3	Nut
30	99-8302	3	Washer-Adjusting
40	99-8303	3	Spring-Nozzle
50	99-8304	3	Spacer-Distance
60	99-8305	3	Rod-Push
70	99-8306	3	Nut-Nozzle
80	99-8307	3	Washer-Plain
90	115-3020	3	Piece-Nozzle
100	99-8309	3	Adjusting Washer ASM
110	99-8310	3	Washer-Adjust (0.10MM)

Ref.	Part Number	Qty.	Description
110	99-8311	3	Washer-Adjust (0.20MM)
110	99-8312	3	Washer-Adjust (0.30MM)
110	99-8313	3	Washer-Adjust (0.40MM)
110	99-8314	3	Washer-Adjust (0.50MM)
110	99-8315	3	Washer-Adjust (0.52MM)
110	99-8316	3	Washer-Adjust (0.54MM)
110	99-8317	3	Washer-Adjust (0.56MM)
110	99-8318	3	Washer-Adjust (0.58MM)
110	99-8319	3	Washer-Adjust (0.80MM)
120	98-7676	3	Gasket
130	98-7677	3	Seal-Heat

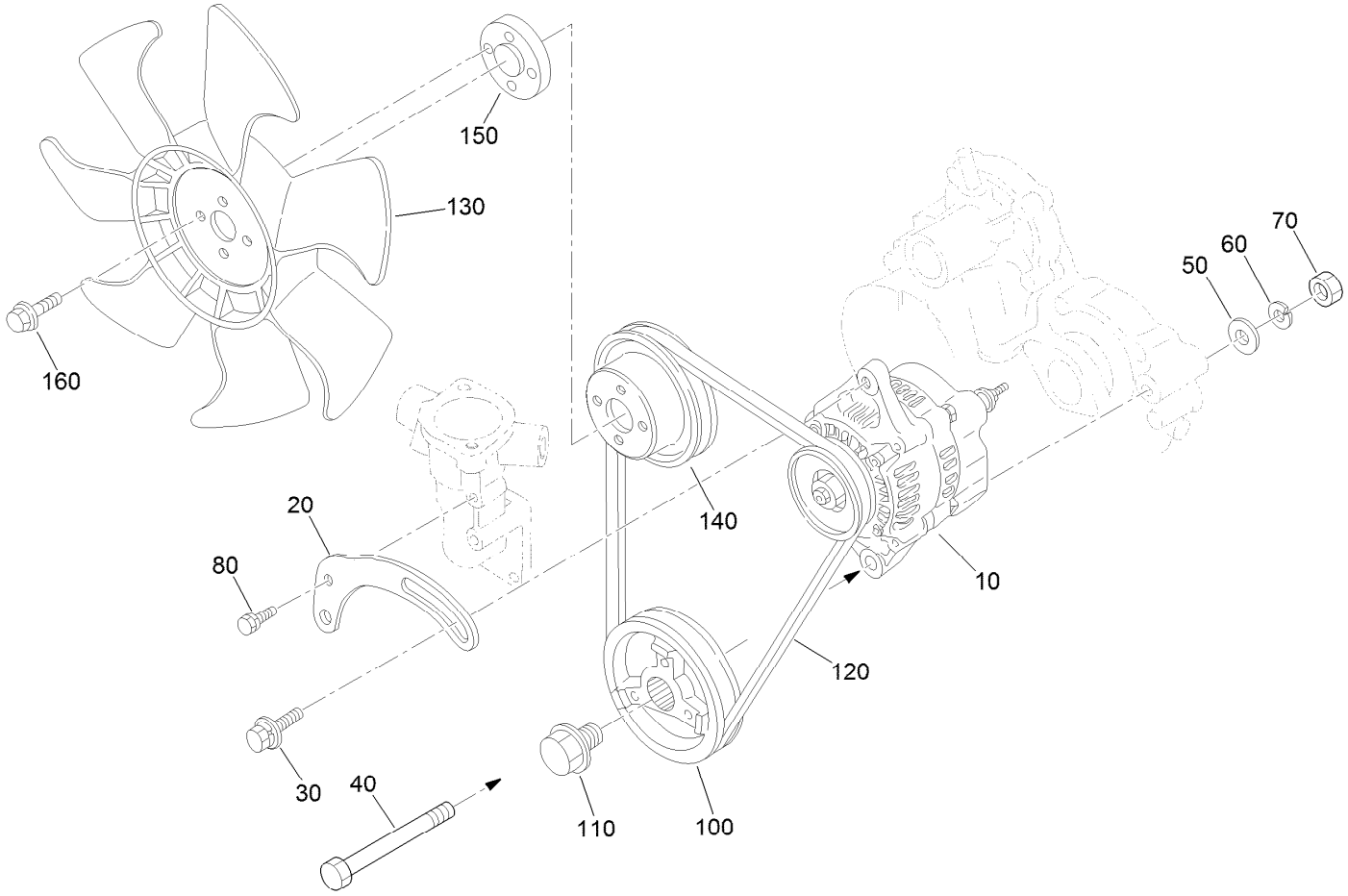

Alternator, Pulley and Fan Assembly

Ref.	Part Number	Qty.	Description
10	98-9474	1	Alternator ASM
20	112-7047	1	Stay-Dynamo
30	108-7088	1	Bolt
40	98-9360	1	Bolt
50	98-9366	1	Washer-Plain
60	98-7738	1	Washer-Spring
70	98-7737	1	Nut
80	98-7692	1	Bolt
100	98-9473	1	Pulley-Drive, Fan
110	98-9585	1	Bolt
120	104-3494	1	Belt-V
130	104-4246	1	Fan-Engine
140	130-1567	1	Pulley-Fan
150	108-2872	1	Collar-Fan
160	108-2873	4	Bolt-Flange

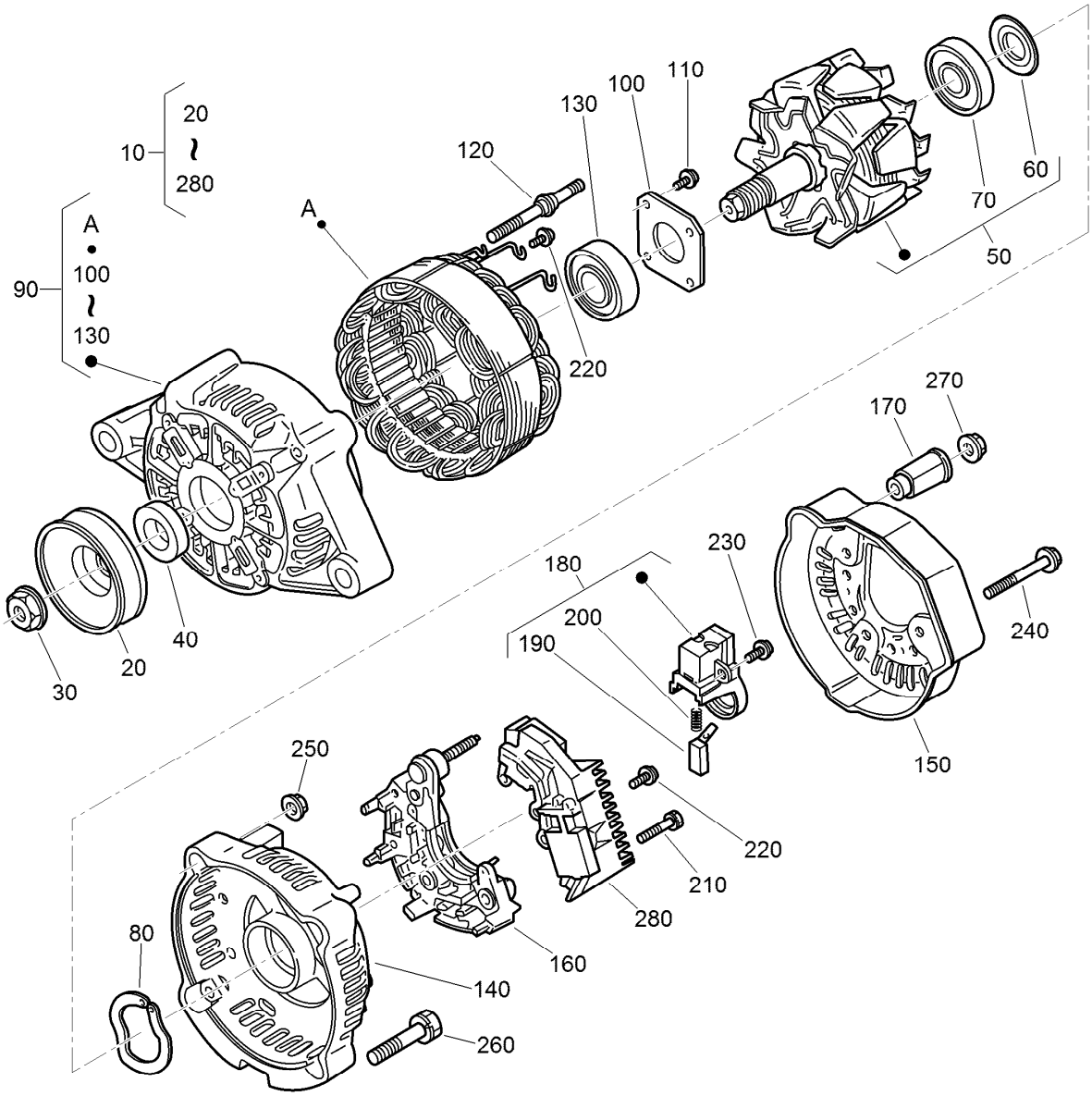

Alternator Components Assembly

Ref.	Part Number	Qty.	Description
10	98-9474	1	Alternator ASM
20	98-9453	1	Pulley-Dynamo
30	98-7708	1	Nut
40	98-7709	1	Collar
50	107-0136	1	Rotor ASM
60	98-7711	1	Cover-Bearing
70	107-0138	1	Bearing-Ball
80	98-7713	1	Washer-Thrust
90	107-0139	1	Drive End Frame ASM
100	98-7715	1	Plate-Retainer
110	98-7716	4	Screw-Head, Round
120	98-7717	2	Bolt-Through
130	133-2811	1	Bearing
140	107-9087	1	Frame-End

Ref.	Part Number	Qty.	Description
150	107-0140	1	Cover-End
160	127-1612	1	Rectifier ASM
170	98-7722	1	Bushing-Insulation
180	107-0141	1	Brush Holder ASM
190	98-7724	2	Brush
200	98-7725	2	Spring-Brush
210	98-7726	2	Screw-Head, Round
220	98-7727	6	Screw-Head, Round
230	98-7728	1	Screw-Head, Round
240	98-7729	3	Bolt
250	98-7730	2	Nut
260	98-7731	2	Bolt
270	98-7732	1	Nut
280	110-3799	1	Regulator ASM

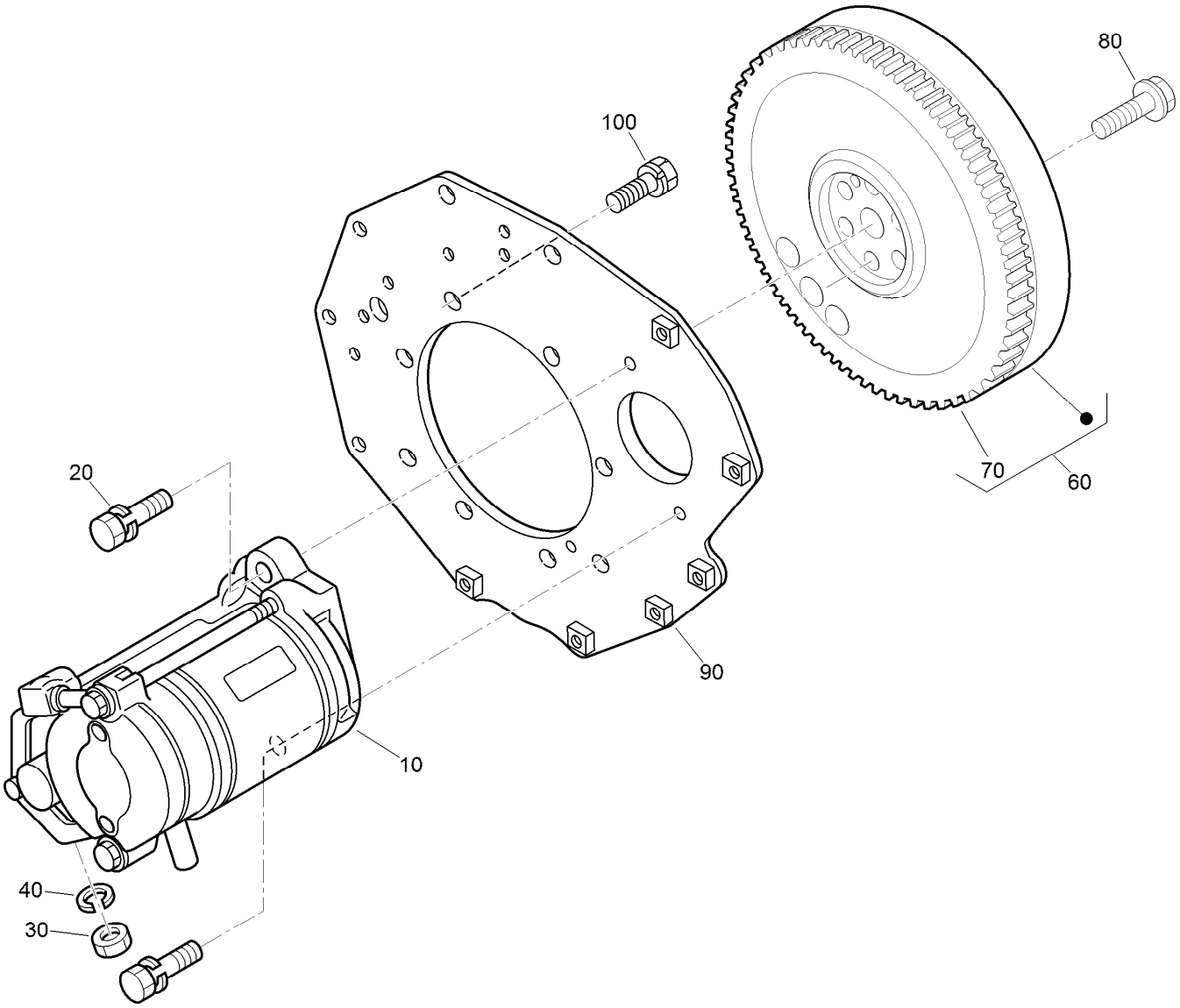

Starter and Flywheel Assembly

Ref.	Part Number	Qty.	Description
10	98-9705	1	Starter ASM
20	98-7697	2	Bolt
30	98-7739	1	Nut
40	105-2893	1	Washer-Spring
60	105-3784	1	Flywheel ASM
70	115-3015	1	Gear-Ring
80	98-9537	6	Bolt-Flywheel
90	98-9486	1	Plate-End, Rear
100	98-9392	8	Bolt

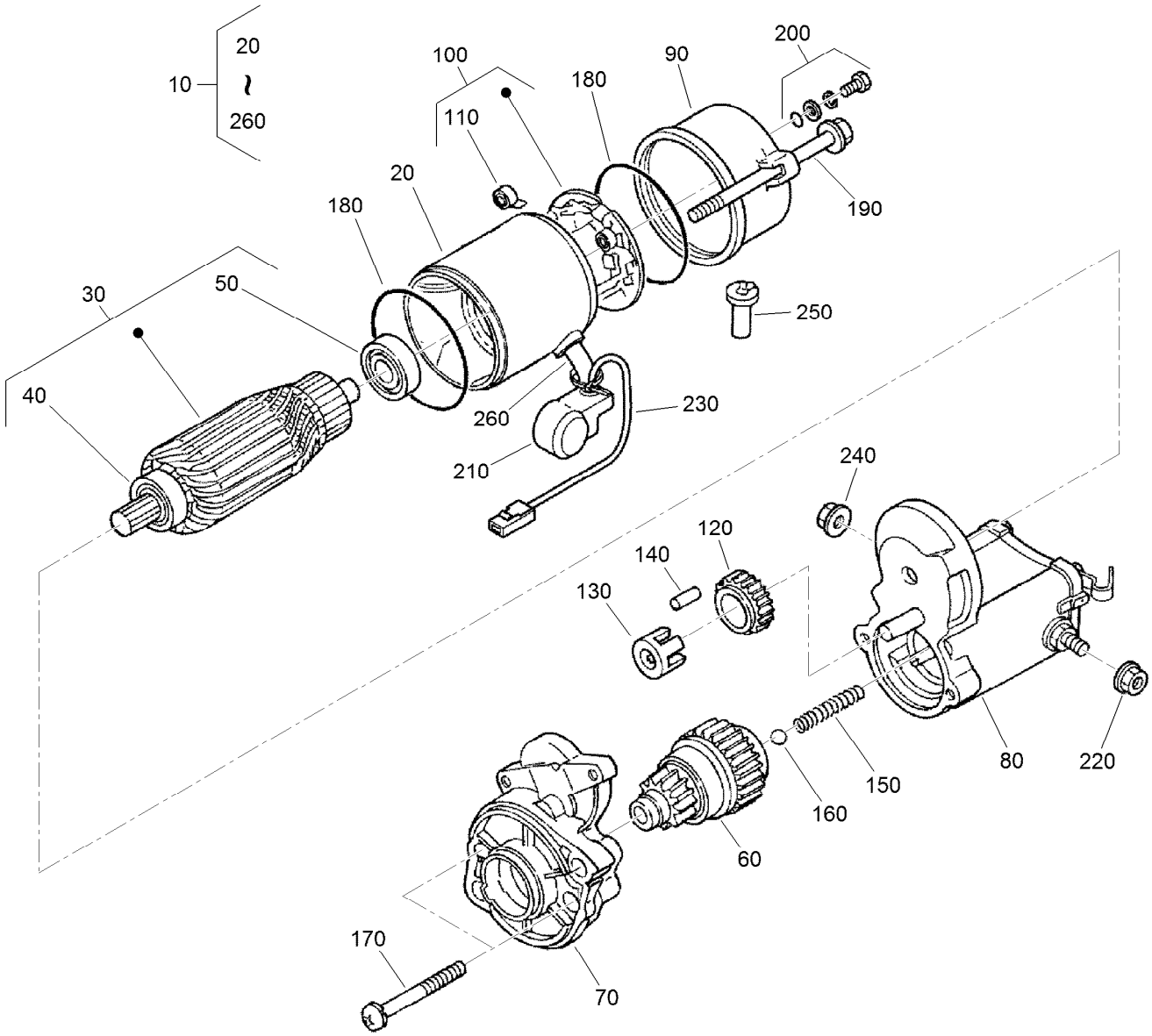

Starter Component Assembly

Ref.	Part Number	Qty.	Description
10	98-9705	1	Starter ASM
20	104-8608	1	Yoke ASM
30	98-7742	1	Armature ASM
40	98-7744	1	Bearing
50	98-7743	1	Bearing
60	99-8373	1	Clutch-Running, Over
70	99-8374	1	Frame-End, Drive
80	105-3746	1	Magnetic Switch ASM
90	98-7748	1	Frame-End
100	98-7749	1	Brush Holder ASM
110	98-7750	4	Spring-Brush
120	98-7751	1	Gear
130	98-7752	1	Retainer

Ref.	Part Number	Qty.	Description
140	98-7753	5	Roller
150	98-7754	1	Spring
160	98-7755	1	Ball
170	98-7756	2	Bolt
180	98-7757	2	O-Ring
190	100-9240	2	Bolt
200	98-7758	2	Bolt ASM
210	99-8375	1	Cover
220	99-8371	1	Nut-Hex
230	98-9711	1	Cord-Solenoid, Stop
240	99-8376	1	Nut-Hex
250	98-7759	1	Pipe-Drain
260	98-9712	1	Band-Cover

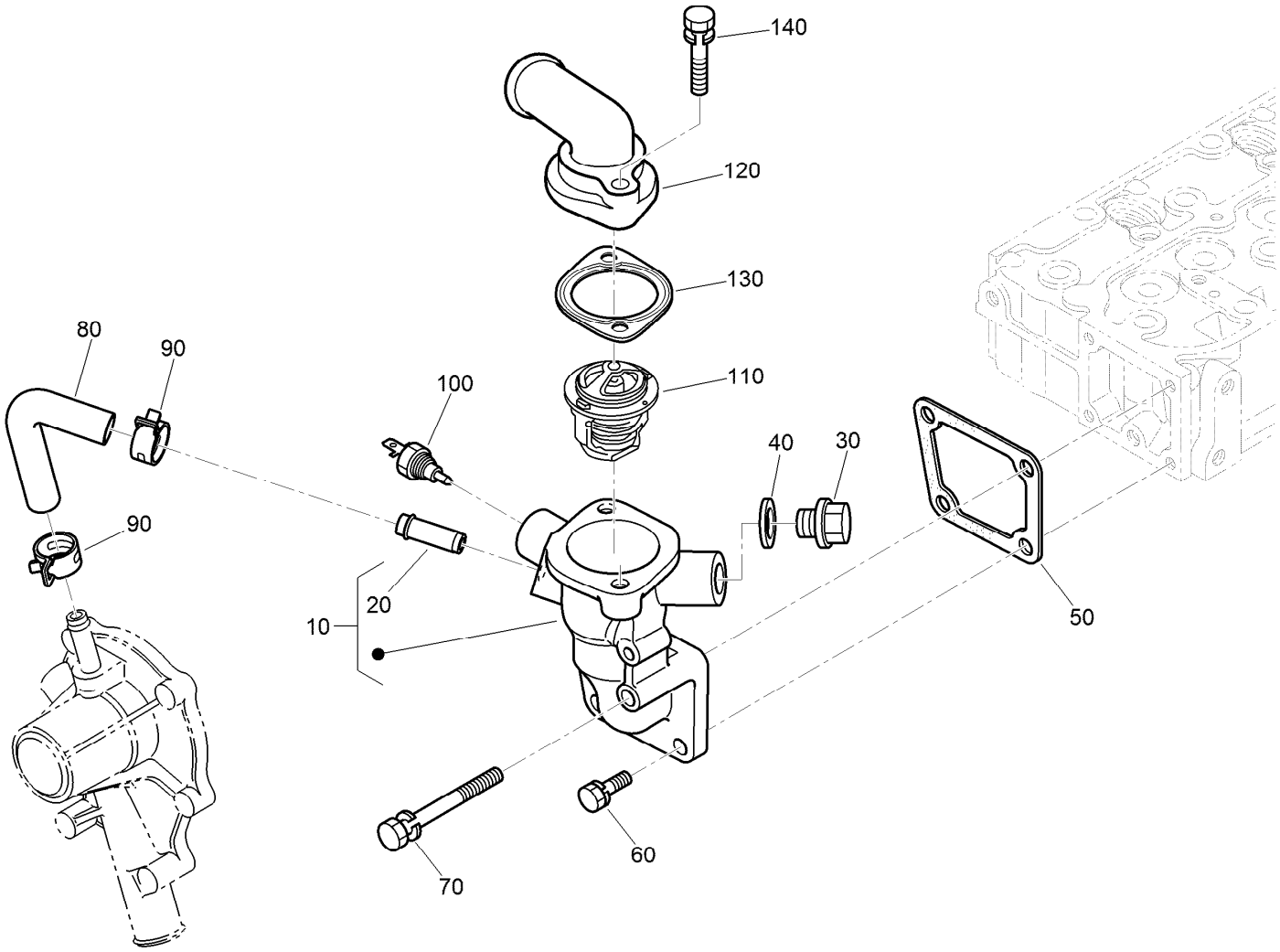

Water Flange and Thermostat Assembly

Ref.	Part Number	Qty.	Description
10	98-9713	1	Water Flange ASM
20	98-9580	1	Pipe-Return, Water
30	105-3747	1	Plug
40	99-3583	1	Gasket
50	98-9638	1	Gasket-Flange, Water
60	98-7692	3	Bolt
70	98-9356	1	Bolt
80	98-9578	1	Pipe-Return, Water
90	125-9078	2	Clamp-Hose
100	98-9719	1	Thermoswitch
110	98-7778	1	Thermostat ASM
120	104-4804	1	Outlet-Water
130	105-3748	1	Gasket-Thermostat
140	98-7777	2	Bolt

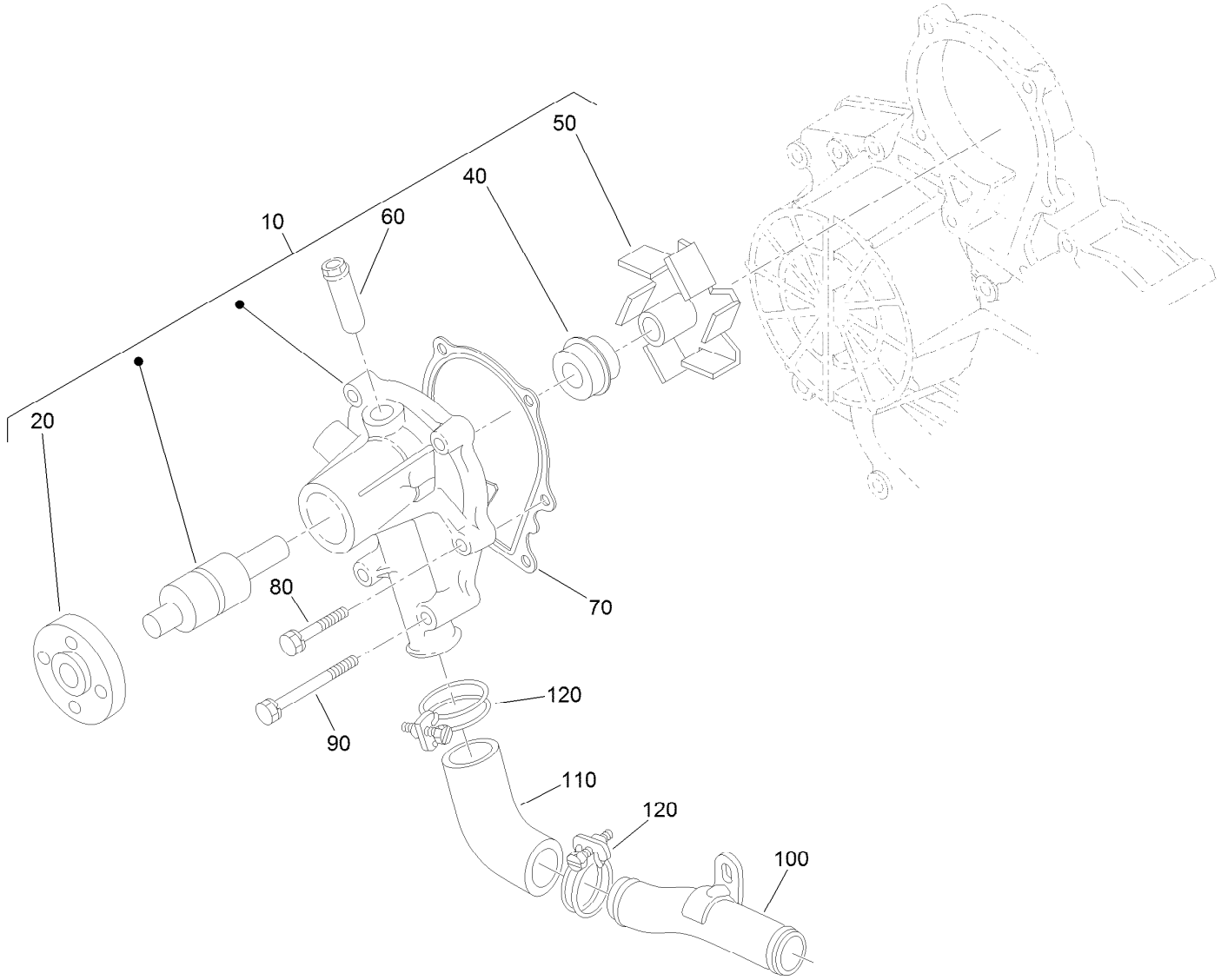

Water Pump Assembly

Ref.	Part Number	Qty.	Description
10	107-9089	1	Water Pump ASM
20	99-3516	1	Flange-Pump, Water
40	105-3750	1	Mechanical Seal ASM
50	112-7017	1	Impeller-Pump, Water
60	100-1932	1	Pipe-Return, Water
70	99-3454	1	Gasket-Pump, Water
80	98-9353	4	Bolt
90	107-9090	2	Bolt
100	98-9716	1	Pipe-Water
110	107-9091	1	Pipe-Water
120	127-0439	2	Clamp-Hose

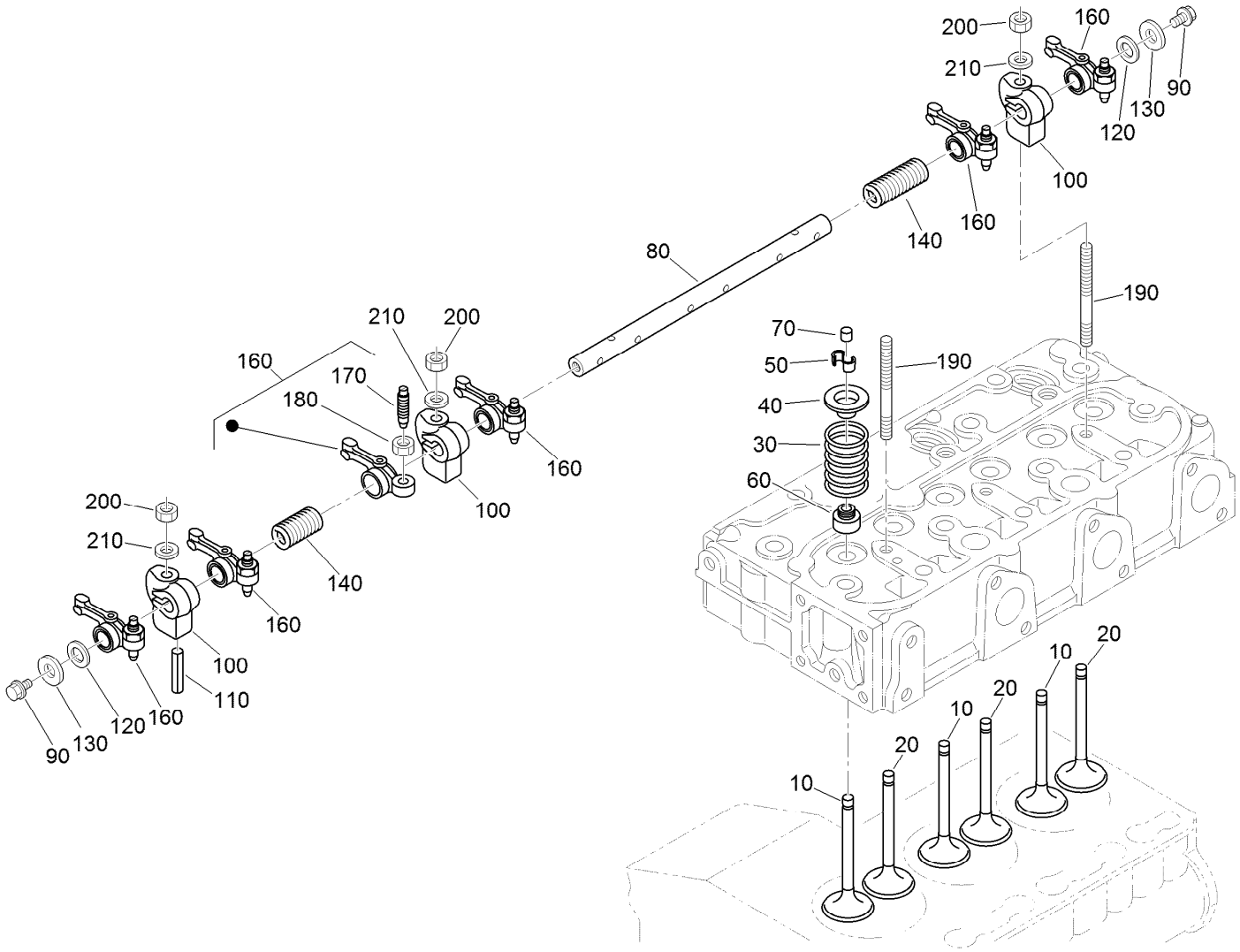

Valve and Rocker Arm Assembly

Ref.	Part Number	Qty.	Description
10	112-7018	3	Valve-Inlet
20	120-2564	3	Valve-Exhaust
30	98-9648	6	Spring-Valve
40	107-9092	6	Retainer-Spring
50	117-7572	6	Collet-Spring, Valve
60	99-8385	6	Seal-Stem, Valve
70	98-9497	6	Cap-Valve
80	130-1248	1	Shaft-Arm, Rocker
90	99-8363	2	Bolt-Flange
100	98-9505	3	Bracket-Arm, Rocker

Ref.	Part Number	Qty.	Description
110	105-3758	1	Pin-Spring
120	98-9507	2	Washer-Shaft, Rocker Arm
130	110-3832	2	Washer-Plain
140	98-9504	2	Spring-Arm, Rocker
160	112-7020	6	Rocker Arm ASM
170	98-9502	6	Screw-Adjusting
180	98-9503	6	Nut
190	98-9506	3	Stud
200	98-9393	3	Nut
210	98-9385	3	Washer-Flat

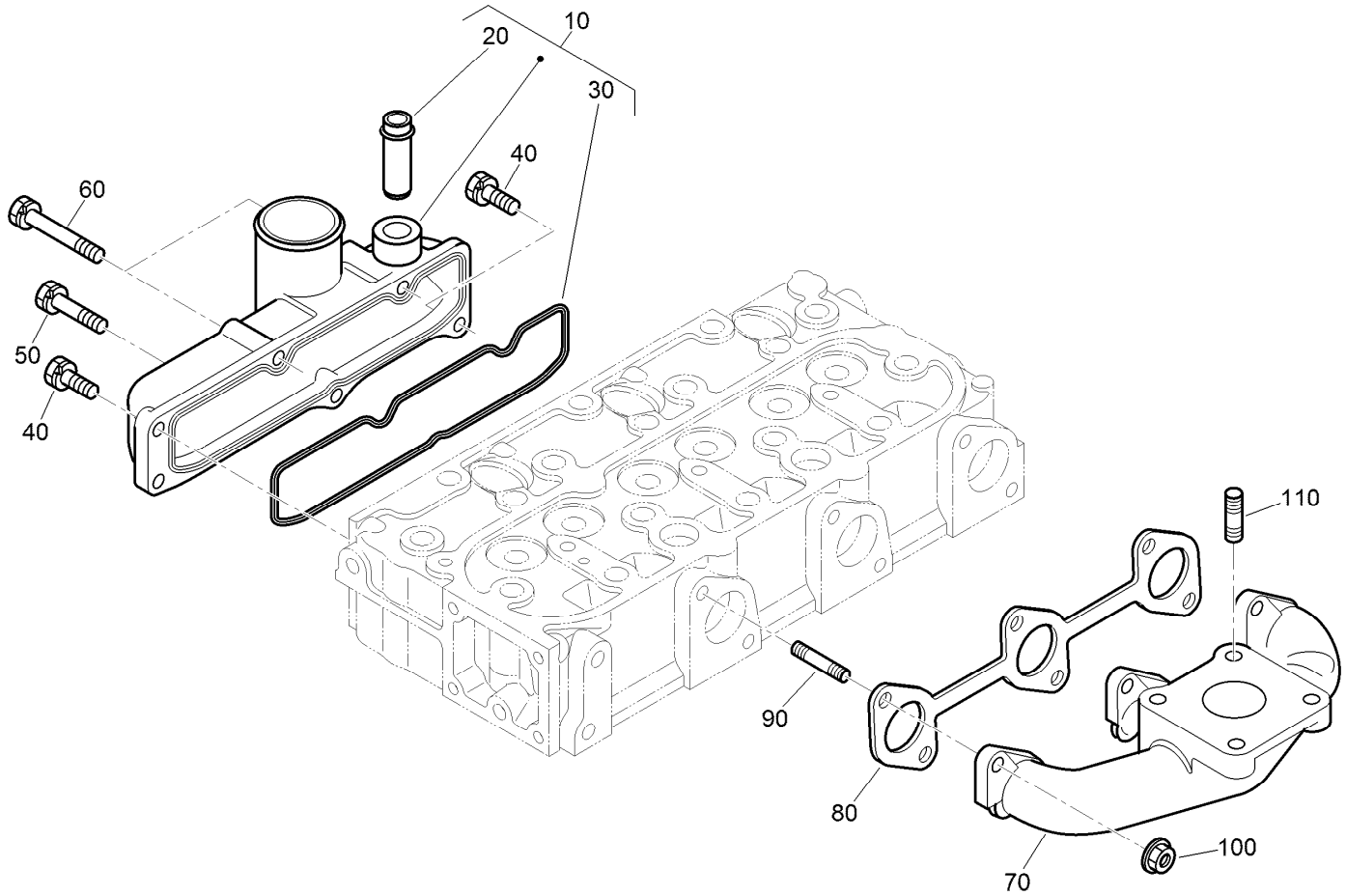

Inlet and Exhaust Manifold Assembly

Ref.	*Part Number*	*Qty.*	*Description*
10	107-7843	1	Manifold Inlet ASM
20	98-9492	1	Joint-Pipe, Breather
30	98-9609	1	Gasket-Manifold, Inlet
40	127-0403	3	Bolt-Flange
50	98-9353	1	Bolt
60	125-9063	2	Bolt-Sems
70	107-9093	1	Manifold-Exhaust
80	99-8327	1	Gasket-Manifold, Exhaust
90	98-9588	6	Stud
100	98-9665	6	Nut
110	98-7769	4	Stud

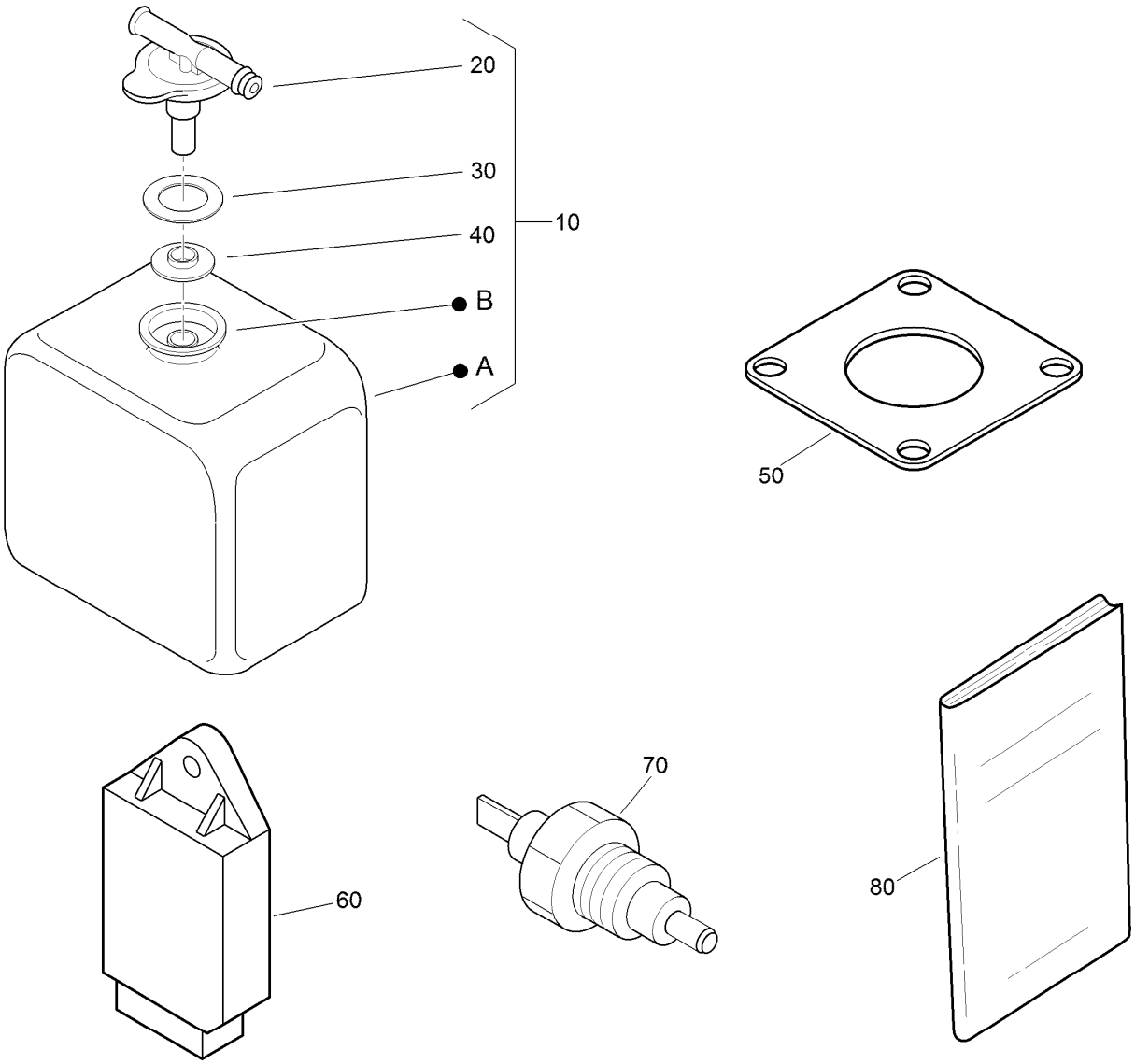

Miscellaneous Engine Parts

Ref.	*Part Number*	*Qty.*	*Description*
10	104-9318	1	Bottle-Overflow
20	115-4132	1	Cap
30	105-3755	1	Gasket
40	105-3756	1	Plate
50	99-8343	1	Gasket-Muffler
60	98-7611	1	Controller-Glow
70	106-7772	1	Thermoswitch
80	130-1543	1	Manual-Operator

Attachments and Accessories

For 30807 Groundsmaster 3500-D Rotary Mower

Product Name	Model/Part
Roller Scraper Kit	104-5168
Blade-High Lift	104-5183
Blade-Angle Sail	105-9810-03
Blade-Atomic	107-0235-03
27in Blade Service Pack (qty 6)	108-1462
Blade-Combo	108-9026-03
LH Short Liftarm Assembly	115-3465
RH Short Liftarm Assembly	115-3466
Wireless Hourmeter	115-4754
External Antenna Kit, Wireless Hourmeter System	115-9524
Base Station Kit, Wireless Hourmeter System	115-9542
Repeater Kit, Wireless Hourmeter System	115-9543
Sectional Roller Assembly	117-5121
Large Seat Cover	120-5179
Roller Asm (UHMW)	131-7800
Ballast Kit (27in C/U)	136-2881
400-hour Filter Maintenance MVP Kit	30058
400-hour Filter Maintenance MVP Kit	30090
Bimini Sunshade for 2-Post Roll-Over Protection System	30358
Premium Seat Kit	30629
27in Rotary Cutting Unit	30834
Leaf Mulching Kit	30836
Work Light Kit	30841

Notes:

TORO®

Count on it.