TORO®

25" H.D. — 23201-80001 THRU 20001 & UP
34" H.D. — 23301-80001 THRU 20001 & UP

PARTS CATALOG

25" & 34" WHIRLWIND® HEVI-DUTY

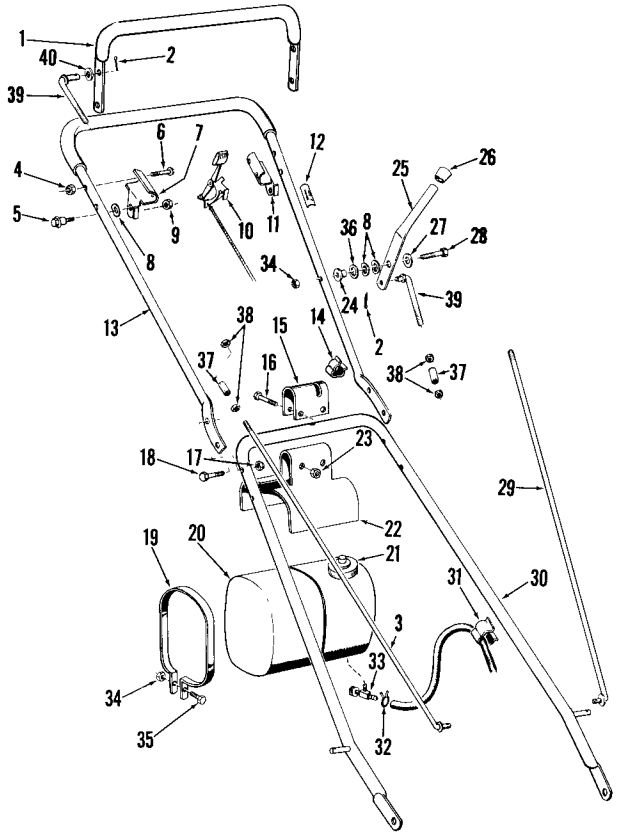

25"& 34" HANDLE ASSEMBLY

Ref. No.	Part No.	Description	No. Used
1	2-9849	Bail & Grip Assembly	1
2	3272-6	Pin, Cotter	2
3	10-9360	Control Rod, Lower	1
4	3296-2	Locknut	4
5	5-2490	Screw, Shoulder	2
6	3251-11	Screw, Machine	4
7	3-7371	Bracket, Control Bail	1
8	3290-211	Washer, Spring	4
9	3296-47	Locknut	2
10	3-7807	Control, Throttle	1
11	3-7372	Bracket, Control Bail	1
12	3-2067	Decal	1
13	3-7569	Handle & Grip Assembly	1
14	5-0748	Clamp	1
15	3-6477	Clamp, Fuel Tank	1
16	322-7	Capscrew	2
17	32146-8	Locknut	4
18	321-8	Capscrew	4
19	3-6346	Strap, Tank	2
20	222-14	Tank	1
21	222-15	Cap, Tank	1

Ref. No.	Part No.	Description	No. Used
22	3-6345	Bracket, Fuel Tank	1
23	32146-5	Locknut	2
24	3-7811	Pivot	1
25	5-2154	Handle, Cutter	1
26	5-0747	Button, Plug	1
27	3256-22	Washer	1
28	321-10	Capscrew	1
29	10-9370	Control Rod, Lower	1
30	3-8193	Lower Handle Assembly 34"	1
30	3-6850	Lower Handle Assembly 25"	1
31	3-5181	Clamp	1
32	2210-87	Clamp, Hose	1
33	304-71	Shut off Valve	1
34	32146-8	Locknut	3
35	321-10	Capscrew	2
36	3256-25	Washer	1
37	3-6481	Sleeve	2
38	3217-6	Nut	4
39	3-8197	Cutter Link	2
40	3-6712	Spacer	1
*	3-8769	Loose Parts Kit 25"	1
*	3-7589	Loose Parts Kit 34"	1

*Not Illustrated

COPYRIGHT 1971 BY
TORO MANUFACTURING CORP.
MINNEAPOLIS, MINN 55420 — U S.A

PRICE $1.00

25'' HEVI-DUTY

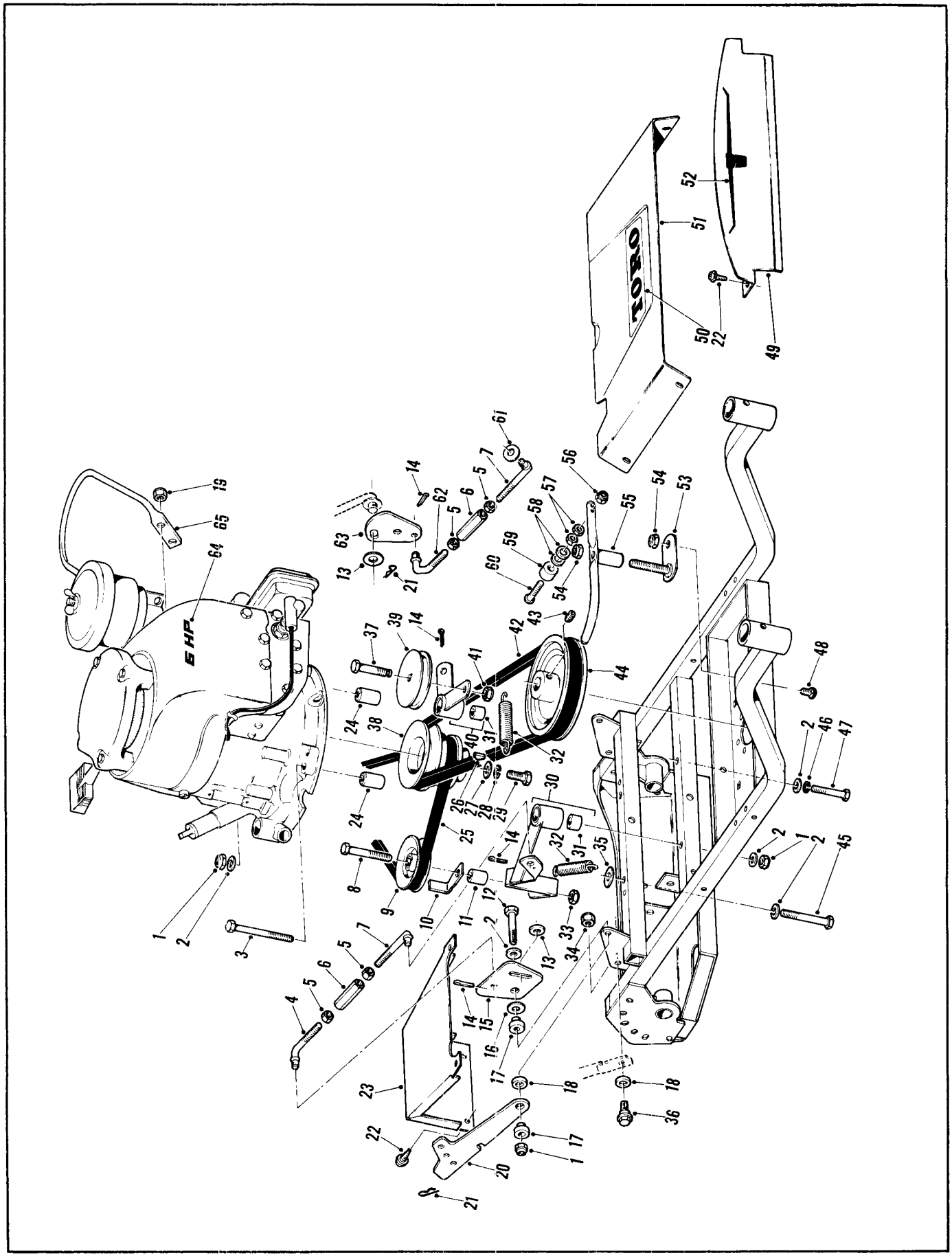

25'' HEVI-DUTY PARTS LIST

Ref. No.	Part No.	Description	No. Used
1	32146-5	Locknut	5
2	3256-23	Washer	7
3	322-23	Capscrew	2
4	5-1493	Link, Traction	1
5	3217-6	Nut	4
6	3-6481	Sleeve	2
7	3-8197	Link	2
8	323-12	Capscrew	1
9	3-4243	Pulley	1
10	3-6471	Hook	1
11	5-1607	Spacer	1
12	32104-34	Screw	2
13	3-6712	Spacer	2
14	3272-6	Cotter Pin	4
15	5-1492	Bell Crank	1
16	5-0744	Washer	2
17	3-7811	Pivot	4
18	3-3287	Washer	4
19	32146-4	Locknut	2
20	3-2656	Latch	2
21	3290-250	Hair Pin Cotter	3
22	32104-77	Self Tapping Screw	10
23	3-8152	Rear Shroud	1
24	3-8164	Pivot	2
25	3-2733	Belt	1
26	3257-17	Key	1
27	3256-4	Washer	1
28	3253-21	Lockwasher	1
29	3211-4	Capscrew	1
30	5-2147	Arm & Bushing Assembly	1
31	256-77	Bushing	2
32	3-8135	Spring	2
33	32146-2	Locknut	1

Ref. No.	Part No.	Description	No. Used
34	32146-5	Locknut	2
35	4-2320	Spacer	2
36	5-2490	Screw	2
37	3-7283	Capscrew	1
38	5-1562	Pulley	1
39	244-63	Pulley	1
40	5-2127	Arm & Bushing Assembly	1
41	32146-6	Locknut	1
42	3-8095	Belt	1
43	3246-3	Set Screw	2
44	3-8423	Pulley	1
45	322-12	Capscrew	1
46	3253-4	Lockwasher	1
47	322-9	Capscrew	1
48	3231-21	Carriage Bolt	1
49	3-8151	Shroud Panel	1
50	3-8154	Decal	1
51	5-2148	Front Shroud	1
52	3-8155	Decal	1
53	3-8306	Pivot Base W. A.	1
54	32146-2	Locknut	2
55	5-2126	Brake Arm	1
56	3296-12	Locknut	1
57	3217-26	Nut	2
58	3256-2	Washer	2
59	237-45	Bumper	1
60	3251-7	Screw	1
61	3-3846	Washer	1
62	5-2142	Link	1
63	5-2135	Bell Crank	1
64	3-8153	Decal	1
65	3-8282	Guard	1

25'' HEVI-DUTY

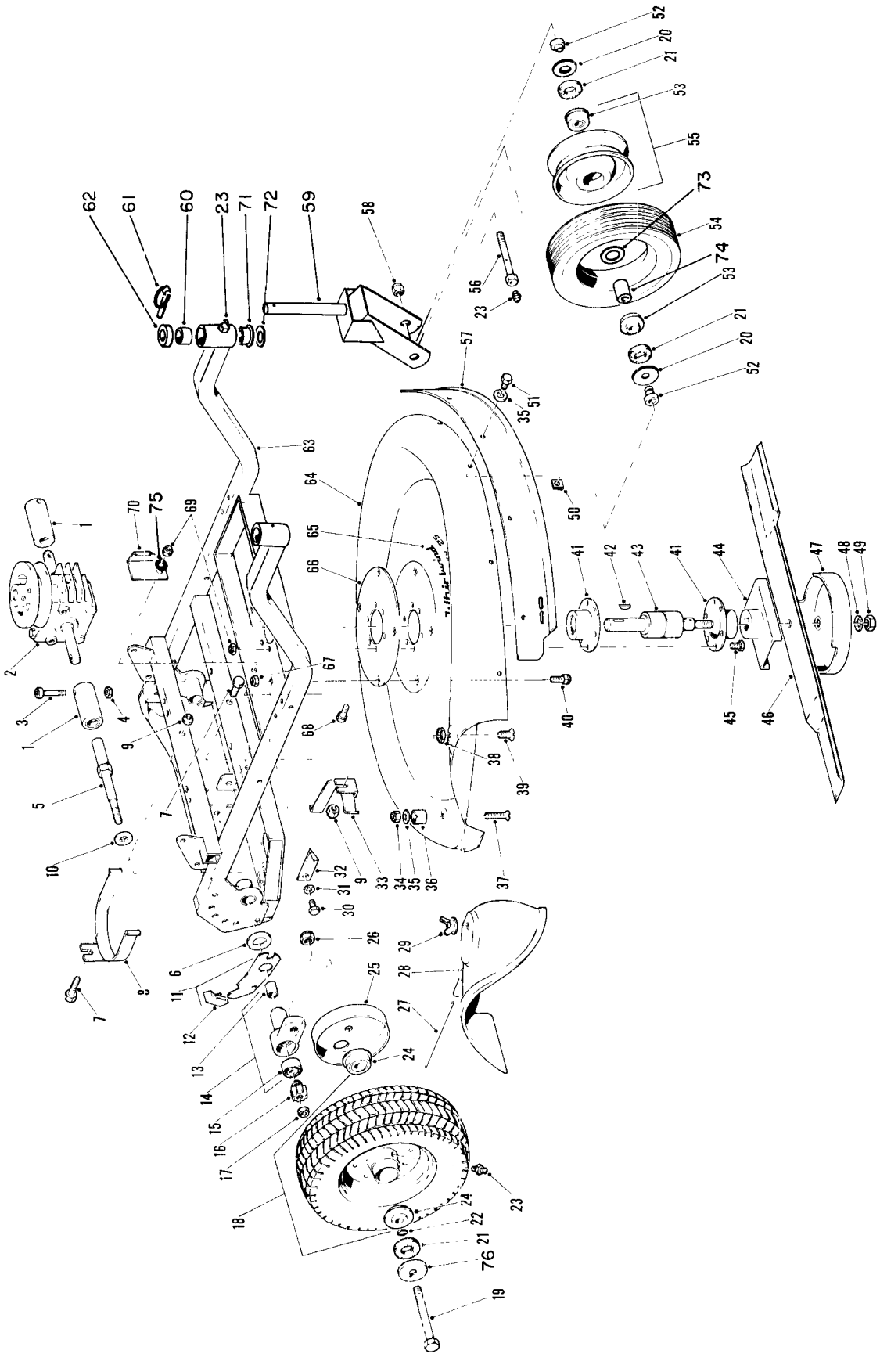

25" HEVI-DUTY PARTS LIST

Ref. No.	Part No.	Description	No. Used
1	5-2138	Clutch Assembly	1
*	5-2140	Clutch Assembly	1
2	3-8699	Transmission Assembly	1
3	5-1491	Screw	2
4	3296-2	Locknut	2
5	5-2131	Drive Spindle, Right	1
*	5-2132	Drive Spindle, Left	1
6	3-8115	Thrust Washer	2
7	322-7	Capscrew	2
8	5-2145	Belt Retainer W. A.	1
9	3296-47	Locknut	2
10	252-73	Washer	2
11	5-2118	Spring Arm Assy., Right	1
*	5-2117	Spring Arm Assy., Left	1
12	5-0657	Knob, Right	1
*	5-0656	Knob, Left	1
13	256-1	Bushing	2
14	3-8117	Pivot Arm Assy., Right	1
*	3-8116	Pivot Arm Assy., Left	1
15	251-183	Bearing	2
16	3-7829	Pinion Kit	1
17	3220-3	Jam Nut, Right	1
*	3-5781	Nut, Special, Left Hand	1
18	3-9219	Rear Wheel Assy.	2
19	3213-12	Capscrew	2
20	3256-28	Washer	4
21	3-4417	Washer	6
22	237-30	"O" Ring	2
23	302-5	Grease Fitting	6
24	251-191	Bearing	4
25	3-8127	Wheel Cover	2
26	3296-28	Locknut	2
27	3-1176	Hinge Pin	1
28	3-0674	Deflector	1
29	3-4808	Wing Nut	1
30	322-3	Capscrew	2
31	3253-4	Lockwasher	2
32	5-1592	Belt Retainer	1
33	5-2144	Belt Retainer W. A.	1
34	32146-8	Locknut	2
35	3256-2	Washer	7

Ref. No.	Part No.	Description	No. Used
36	3-5528	Spacer	2
37	32108-7	Screw	2
38	3290-147	Pal Nut	1
39	32108-21	Screw	1
40	3231-2	Carriage Bolt	4
41	3-1931	Bearing Housing	2
42	3257-23	Key	2
43	3-4533	Spindle Bearing	1
44	3-5220	Retainer, Blade	1
45	322-5	Capscrew	6
46	5-4554	Blade	1
47	3-3803	Cup	1
48	3253-27	Lockwasher	1
49	3296-19	Locknut	1
50	3290-192	Special Nut	1
51	321-5	Capscrew	5
52	10-9270	Spacer	4
53	251-180	Bearing	4
54	234-18	Tire	2
55	3-2839	Wheel W.A. w/Ref. No. 53	2
56	10-9300	Axle Bolt	2
57	3-5536	Housing Cover	1
58	32146-13	Locknut	2
59	10-9380	Caster Fork	2
60	256-101	Bushing	2
61	3290-243	Klik Pin	2
62	10-9310	Spacer	10
63	10-9450	Frame W. A.	1
64	3-4562	Housing	1
65	3-8156	Decal	1
66	3-2118	Plate	1
67	32146-2	Locknut	4
68	322-2	Capscrew	1
69	32146-5	Locknut	7
70	3-8308	Belt Retainer	1
71	256-148	Bushing	2
72	3-0737	Washer	2
73	10-9280	Washer, Special	2
74	10-9290	Spacer, Bearing	2
75	3256-23	Washer	1
76	3-4416	Slinger	2

BAGGING KIT

Ref. No.	Part No.	Description	No. Used
*	3-5219	Bag Hanger Assembly (Includes all hardware)	1

Ref. No.	Part No.	Description	No. Used
*	6-5340	Bag Chute	1
*	4-4879	Giant Bag	1

* Not Illustrated

34'' HEVI-DUTY

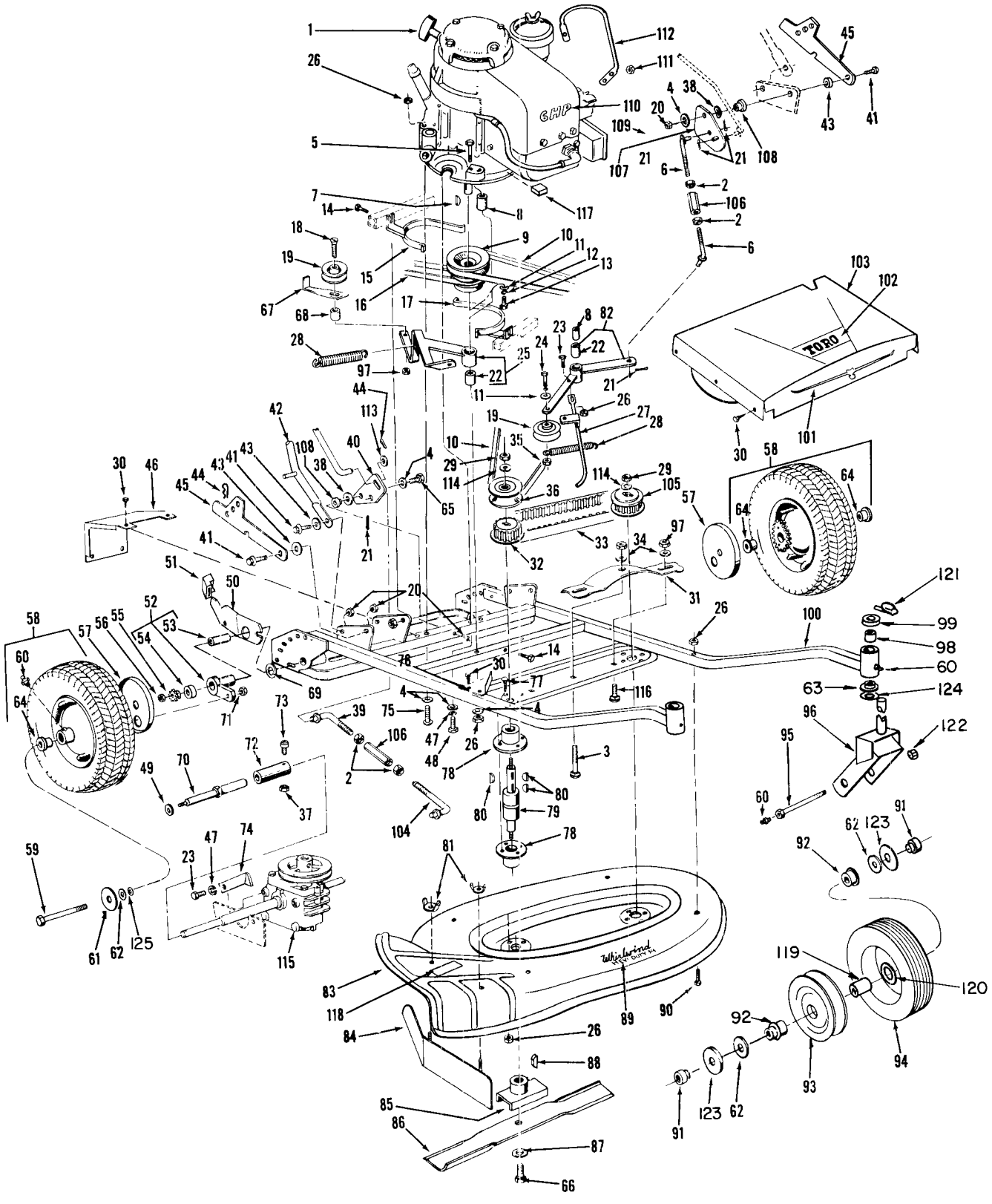

34" HEVI-DUTY PARTS LIST

Ref. No.	Part No.	Description	No. Used
1	221-254	Engine	1
2	3217-6	Nut	4
3	3231-7	Bolt, Carriage	1
4	3256-23	Washer	6
5	322-22	Screw	2
6	5-1493	Link	2
7	3257-17	Key	1
8	3-8164	Spacer	2
9	5-1562	Pulley	1
10	3-8166	Belt	1
11	3256-4	Washer	2
12	3253-21	Lockwasher	1
13	3211-4	Screw	1
14	322-7	Screw	2
15	5-1576	Retainer, Belt	1
16	5-1583	Belt	1
17	5-1568	Retainer, Belt	1
18	323-11	Screw	1
19	3-4243	Pulley	2
20	3296-47	Locknut	6
21	3272-6	Pin, Cotter	5
22	256-77	Bushing	2
23	322-3	Screw	3
24	3-7283	Screw	1
25	5-2147	Arm & Bushing Assy.	1
26	3296-29	Locknut	17
27	3-8203	Arm, Brake	1
28	3-8135	Spring	2
29	3296-33	Locknut	2
30	32104-77	Screw	12
31	5-1534	Plate, Spreader	1
32	5-1488	Pulley	1
33	5-1467	Belt	1
34	3256-24	Washer	3
35	3296-5	Locknut	1
36	5-1567	Pulley	1
37	3296-2	Locknut	2
38	5-0744	Washer	2
39	5-1493	Link	1
40	5-1492	Bellcrank, Traction	1
41	5-2490	Screw, Shoulder	3
42	3-8193	Lower Handle Assy.	1
43	3-3287	Washer, Rubber	4
44	3290-250	Cotter, Hairpin	3
45	3-2656	Latch, Handle	2
46	3-8152	Shroud, Rear	1
47	3253-4	Lockwasher	3
48	322-9	Screw	1
49	252-73	Washer	2
50	5-2118	Arm, Spring Assy. - Right	2
50	5-2117	Arm, Spring Assy. - Left	1
51	5-0657	Knob - Right Hand	2
51	5-0656	Knob - Left Hand	1
52	3-8117	Arm, Bushing & Brg. Assy.	1
*	3-8116	Arm, Bushing & Brg. Assy.	1
53	256-1	Bushing	2
54	251-183	Bearing	2
55	3-7829	Pinion Kit	1
56	3220-3	Jam Nut - Right Hand	1
*	3-5781	Nut, Special - Left Hand	1
57	3-8127	Cover, Wheel	2
58	3-9219	Rear Wheel Assembly	2
59	3213-12	Axle Bolt Use on Serial No. 251 & Up	2
60	302-5	Fitting, Zerk	6
61	3-4416	Slinger	2
62	3-4417	Seal, Felt	6
63	256-148	Bushing	2
64	251-191	Bearing, Use on Serial Nos. 251 & Up	4
65	32104-23	Screw, Self Tap	1
66	3-5246	Screw, Blade	2
67	3-6471	Hook, Belt	1
68	5-1607	Spacer	1
69	3-8115	Washer	2
70	5-2131	Drive Spindle - Right	1
*	5-2132	Drive Spindle - Left	1
71	3296-28	Locknut	2
72	5-2138	Clutch Assy.	1
*	5-2140	Clutch Assy.	1
73	5-1491	Screw	2
74	5-1592	Retainer	1
75	322-12	Screw	1
76	3-8183	Retainer, Belt	1
77	3-5861	Bolt, Carriage	8
78	3-8178	Housing, Bearing	4
79	5-1471	Bearing, Spindle - Right	1
*	5-1472	Bearing, Spindle - Left	1
80	3257-30	Key	5
81	32103-14	Nut, Wing	2
82	5-2246	Arm & Bushing Assy.	1
83	3-8167	Housing	1
84	3-7704	Mulcher, Leaf	1
85	3-8181	Retainer	2
86	3-8312	Blade	2
87	3253-22	Lockwasher	2
88	5-1473	Key	2
89	3-8188	Decal	1
90	32122-35	Screw	4
91	10-9270	Spacer	4
92	251-180	Bearing	4
93	3-2839	Wheel Disc (Incl. Ref. No. 92)	2
94	234-18	Tire	2
95	10-9300	Axle Bolt	2
96	10-9380	Caster Fork	2
97	3296-39	Locknut	4
98	256-101	Bushing	2
99	10-9310	Spacer	10
100	10-9440	Frame	1
101	3-8191	Decal	1
102	3-8154	Decal	1
103	3-8184	Shroud	1
104	3-8197	Link	2
105	5-1490	Pulley	1
106	3-6481	Sleeve	2
107	5-2247	Bellcrank	1
108	3-7811	Pivot	3
109	32104-37	Screw	1
110	3-8187	Decal	1
111	3296-4	Locknut	2
112	3-8282	Arm	1
113	3-6712	Spacer	1
114	3254-5	Lockwasher	2
115	3-7639	Transmission Assembly	1
116	3231-2	Bolt, Carriage	2
117	3-9451	Spacer	1
118	3-5888	Decal	1

* Not Illustrated

34'' HEVI-DUTY

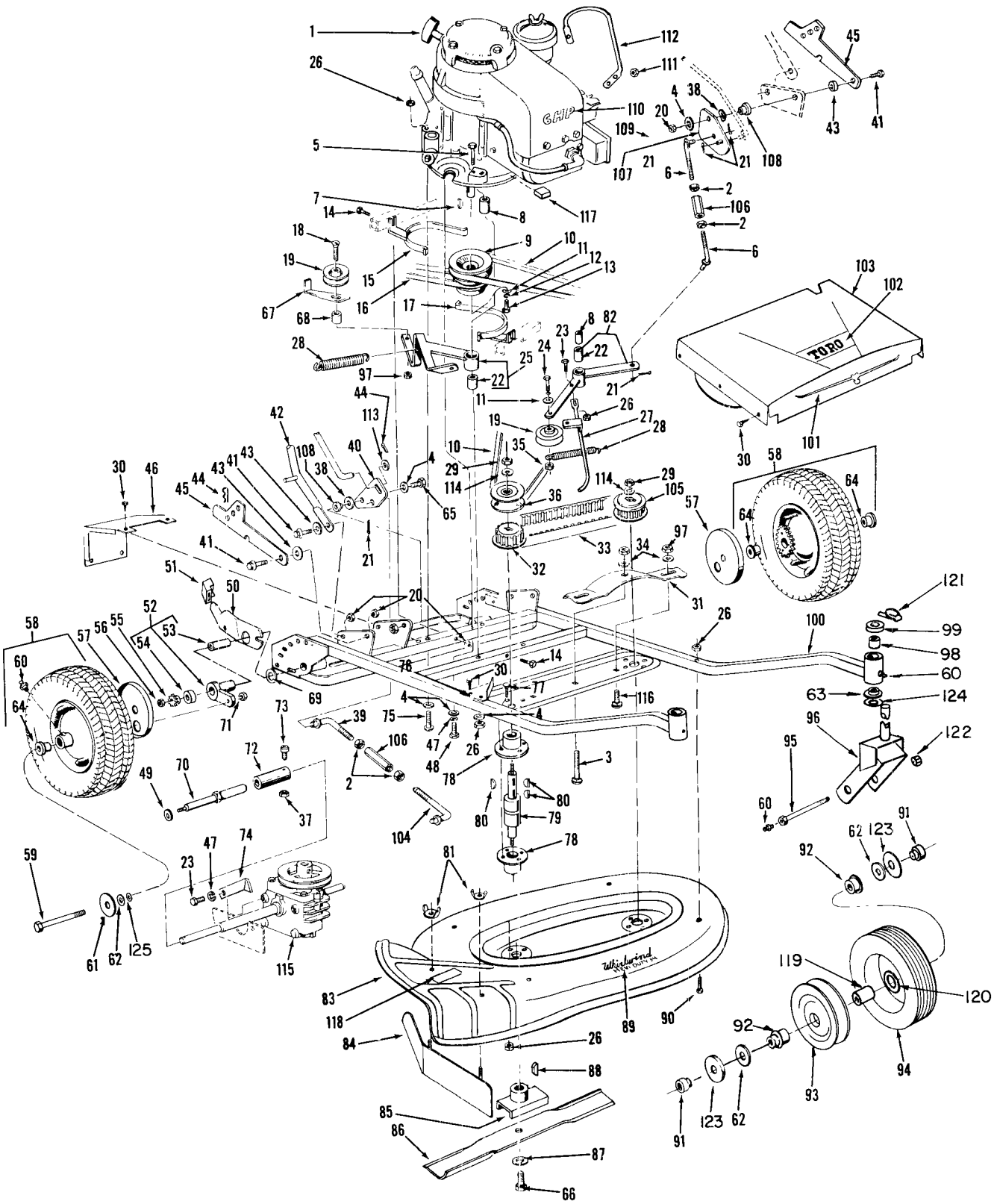

34'' HEVI-DUTY PARTS LIST

Ref. No.	Part No.	Description	No. Used
119	10-9290	Spacer, Bearing	2
120	10-9280	Washer, Special	2
121	3290-243	Klik Pin	2
122	32146-13	Locknut	2

Ref. No.	Part No.	Description	No. Used
123	3256-28	Washer	4
124	3-0737	Washer	2
125	237-30	"O" Ring	2
*	3-7589	Loose Parts Kit, 34"	1

25"& 34" GEAR CASE ASSEMBLY

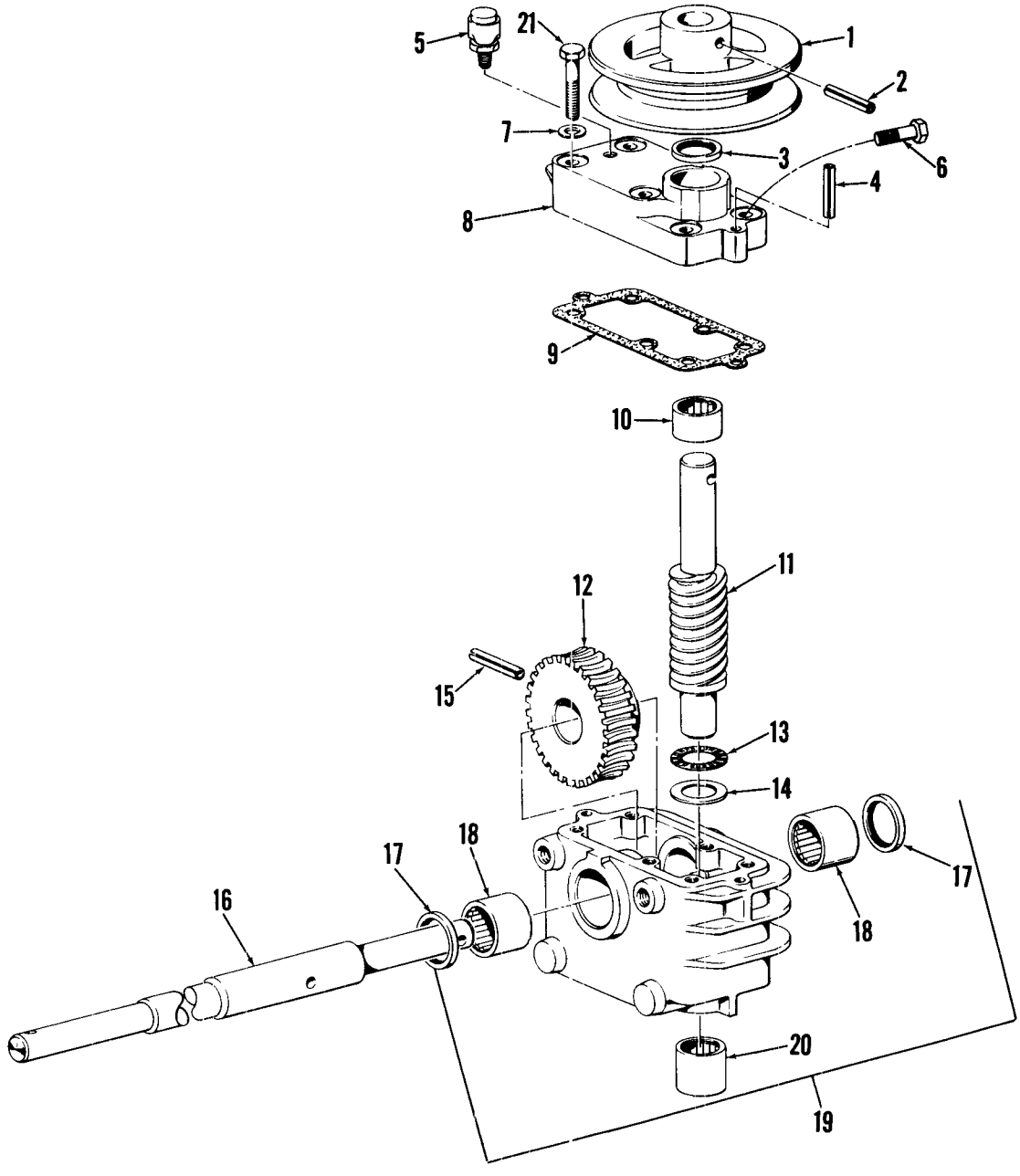

Ref. No.	Part No.	Description	No. Used
1	5-1584	Pulley	1
2	32121-6	Pin	1
3	253-85	Seal, Oil	1
4	32121-2	Pin	2
5	302-14	Vent	1
6	321-8	Screw	2
7	3253-3	Lockwasher	6
8	5-1556	Cover, Gear Case	1
9	3-4512	Gasket	1
10	252-64	Bearing	1
11	5-1563	Shaft, Worm	1

Ref. No.	Part No.	Description	No. Used
12	5-1565	Gear, Worm	1
13	252-58	Bearing, Thrust	1
14	252-59	Washer, Thrust	1
15	32121-12	Pin	1
16	5-2123	Drive Shaft 25" H.D.	1
16	5-2208	Drive Shaft 34" H.D.	1
17	253-84	Seal, Oil	2
18	252-6	Bearing	2
19	3-7539	Gear Case Assy. w/Bearing (Incl. Ref. Nos. 17, 18 & 20)	1
20	252-57	Bearing	1
21	321-9	Capscrew	4

REWIND STARTER NO. 590420

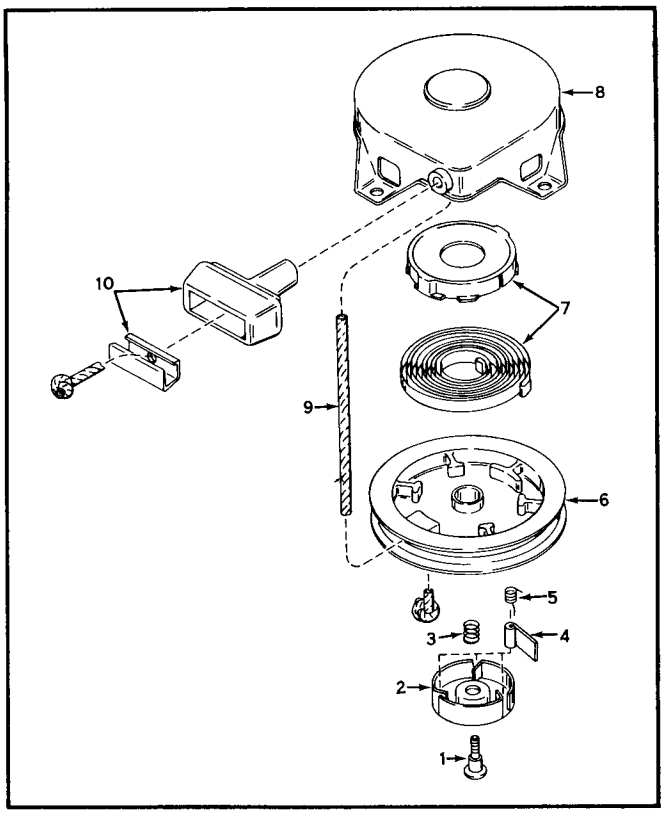

PARTS LIST

Ref. No.	Part No.	Description	No. Used
1	590409	Screw, Retainer	1
2	590410	Retainer, R.H.	1
3	590411	Spring, Brake	1
4	590148	Dog, Starter	1
5	590412	Spring, R.H. Dog	1
6	590413A	Pulley	1
7	590414	Spring & Keeper Assy.	1
8	590415	Housing Assy., Starter	1
9	590386	Rope, Starter	1
10	590387	Handle Assy., Starter	1
11	590459	Pin, Centering	1

MAGNETO MODEL NO. 610689A

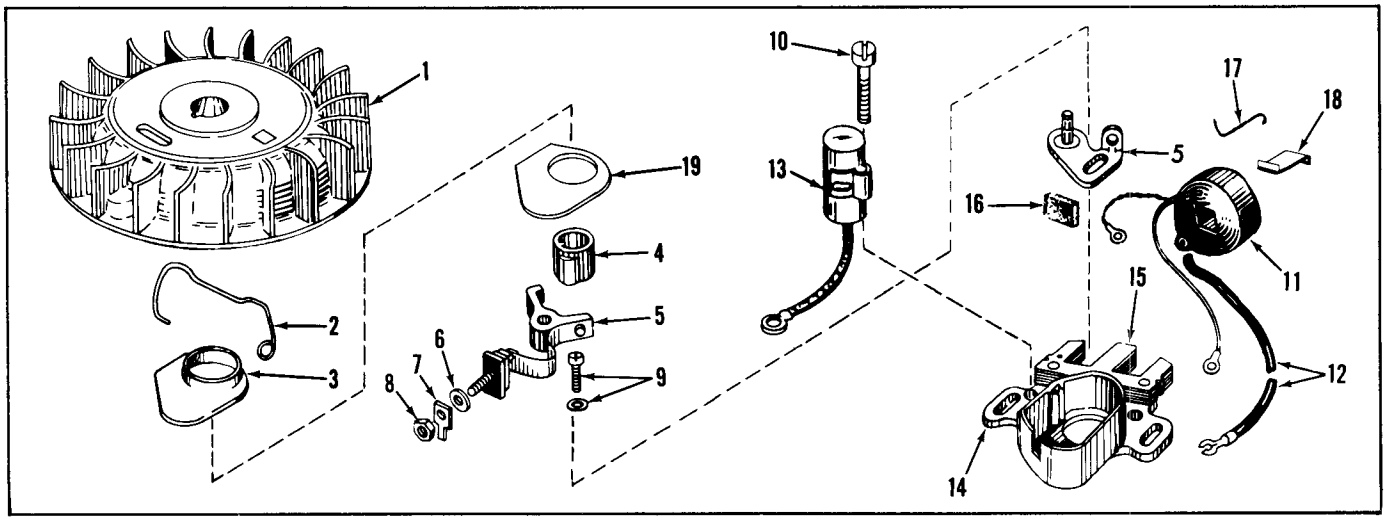

Ref. No.	Part No.	Description	No. Used
1	30555	Flywheel	1
2	30551	Spring, Breaker Box	1
3	30550	Cover, Breaker Box Dust	1
4	30992	Cam Breaker (Not Used on All Engines)	1
5	30547A	Contact Assy., Breaker	1
6	610385	Washer, Terminal	1
7	30843	Tab, Ground Terminal	1
8	610408	Nut, Terminal	1
9	29181	Screw & Washer, Breaker	1
10	610593	Screw, Condenser Fastening	1
11	30560	Coil Assy. (Incl. Ref. Nos. 12, 13 & 18)	1

Ref. No.	Part No.	Description	No. Used
12	30554	Wire, Lead	1
13	30548A	Condenser	1
14	30545	Core & Plate	1
15	30561A	Stator Assy. (Incl. Ref. Nos. 2, 3, 5 thru 14 & 16 thru 19)	1
16	30549	Felt, Cam Wiper	1
17	31311	Clip, Coil Locking	1
18	29629	Spring, Coil Wedge	1
19	30883	Gasket, Dust Cover	1

ENGINE, TECUMSEH

25'' MODEL NO. V50-60052G and 34'' MODEL NO. V60-70073G ENGINE DRAWINGS

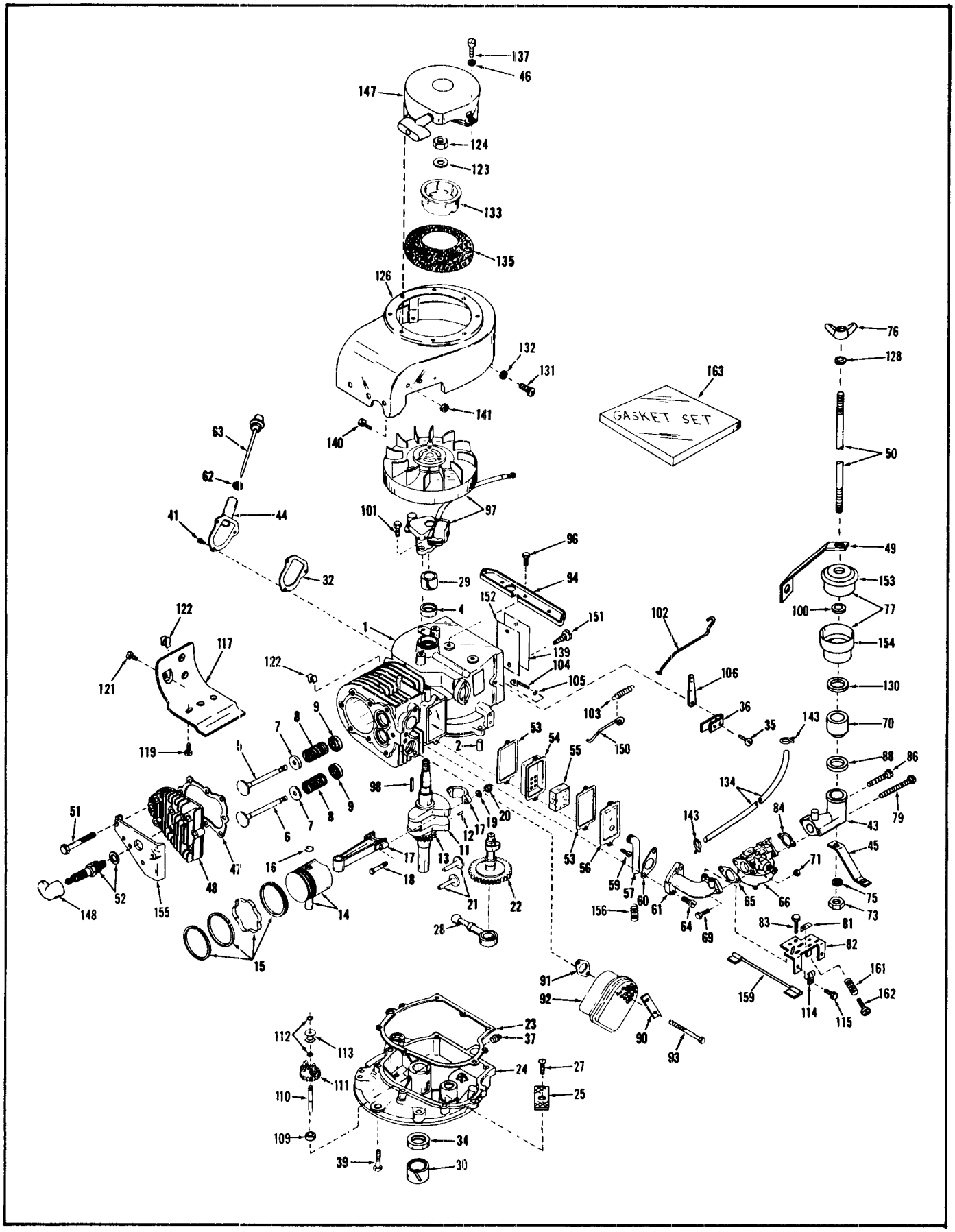

25" and 34" ENGINE PARTS LIST

Ref. No.	Part No.	Description	No. Used
1	31536A	Cylinder Assy. (Incl. Nos. 2, 4, 29 & 32)	1
2	27652	Pin, Dowel	2
4	*27876B	Seal, Oil	1
5	31467A	Valve, Intake (Standard) (Incl. No. 9)	1
5	31468A	Valve, Intake (1/32" Oversize) (Incl. No. 9)	1
6	31469A	Valve, Exhaust (Standard) (Incl. No. 9)	1
6	31470A	Valve, Exhaust (1/32" Oversize) (Incl. No. 9)	1
7	27882	Cap, Upper Valve Spring	2
8	27881	Spring, Valve	2
9	32581	Cap, Lower Valve Spring (Standard)	2
11	31783	Crankshaft Assy. (Incl. Nos. 12 & 13) (Model V50-60052G only)	1
11	30896	Crankshaft Assy. (Incl. Nos. 12 & 13) (Model V60-70073G only)	1
12	29783	Pin, Crankshaft Gear	1
13	27884	Gear, Crankshaft	1
14	30662	Piston & Pin Assy. (Incl. 2 of No. 16) (Standard)	1
14	30663	Piston & Pin Assy. (.010 Oversize) (Incl. 2 of No. 16)	1
14	30664	Piston & Pin Assy. (.020 Oversize) (Incl. 2 of No. 16)	1
15	31498	Ring Set, Piston (Standard)	1
15	31499	Ring Set, Piston (.010 Oversize)	1
15	31500	Ring Set, Piston (.020 Oversize)	1
16	27888	Ring, Piston Pin Retaining	2
17	31466	Rod Assy., Connecting (Incl. Nos. 18, 19 & 20) (Model V50-60052G only)	1
17	30949	Rod Assy., Connecting (Incl. Nos. 18, 19 & 20) (Model V60-70073G only)	1
18	21718	Bolt, Conn. Rod (Model V50-60052G only)	2
18	30682	Bolt, Conn. Rod (Model V60-70073G only)	2
19	26073	Washer, Connecting Rod Bolt	2
20	28264	Nut, Hex	2
21	27893	Lifter, Valve	2
22	32114	Camshaft	1
23	*30684	Gasket, Mounting Flange	1
24	31552B	Flange Assy., Mounting (Incl. Nos. 25, 27, 30, 34, 37 & 110)	1
25	31355	Screen, Oil Filter	1
27	29117	Screw, Sltd. Hex. Hd. S.T.	1
28	31356	Pump Assy., Oil	1
29	31461	Bushing, Crankshaft	1
30	31462	Bushing, Crankshaft	1
32	*28747	Gasket, Filler Tube	1
34	*27897	Seal, Oil	1
35	650548	Screw, Hex Sltd. Washer Hd.	1
36	31335	Clamp, Governor Lever	1
37	27642	Plug, Oil Drain, Sq. Hd.	1
39	650488	Screw, Hex Hd. Cap. Sems	7
41	28749	Screw, Rd. Hd. Sems	3
43	31473	Elbow, Air Cleaner	1
44	29759	Tube, Oil Filler	1
45	31475	Brace, Cleaner Elbow	1
46	650168	Washer, Flat	4
47	*28938B	Gasket, Cylinder Head	1
48	30938A	Head, Cylinder	1
49	31474	Brace, Cleaner	1
50	31476	Stud, Air Cleaner	1
51	28261	Screw, Hex Hd. Cap	8
52	21943	Plug, Spark (Champion J-8 or equivalent)	1
53	*27896	Gasket, Valve Chamber Cover	2
54	28423	Body Assy., Breather	1
55	28424	Element, Breather	1
56	28425	Cover, Valve Chamber	1
57	27627	Tube, Breather	1
59	650128	Screw, Phil. Fil. Hd. Sems	2
60	*27915	Gasket, Intake Pipe	1
61	31512	Pipe, Intake (Model V50-60052G only)	1
61	31358	Pipe, Intake (Model V60-70073G only)	1
62	*29673	Gasket, Dipstick	1
63	29760	Dipstick, Oil (Incl. No. 62)	1
64	650378	Screw, Fil. Hd. Sems	2
65	*26756	Gasket, Carburetor	1
66	631115	Carburetor	1
69	6201	Screw, Hex. Hd. Cap	2
70	29497	Spacer, Cleaner	1
71	29752	Nut, Hex, Lock	2
73	650129	Nut, Hex	1
75	27513	Lockwasher, Split	1
76	650513	Nut, Wing	1
77	31477	Cleaner Assy., Oil Bath Air (Incl. Nos. 100, 128, 130, 153 & 154)	1
79	650519	Screw, Fil. Hd. Mach.	1
81	31495	Decal, Speed Control	1
82	31736	Control Assy., Speed	1
83	30200	Screw, Hex Washer Hd.	2
84	*27272	Gasket, Air Cleaner Elbow	1
86	28597	Screw, Fil. Hd. Sems	1
88	*27165	Gasket, Spacer	1
90	31588	Plate, Locking	1
91	*27930	Gasket, Muffler	1
92	28269	Muffler	1
93	27931	Screw, Hex. Hd. Cap	2
94	28738	Bracket, Blower Housing (Incl. Nos. 131 & 132)	1
96	650561	Screw, Hex. Hd. Cap, Sems	2
97	610689A	Magneto	1
98	30884	Key, Flywheel	1

(Continued next page)

25" and 34" ENGINE PARTS LIST (Continued)

Ref. No.	Part No.	Description	No. Used
100	31480	"O" Ring	1
101	650489	Screw, Hex Hd. Cap. Sems	2
102	31823	Link, Throttle	1
103	31361	Spring, Governor	1
104	30669	Rod, Governor (Incl. No. 105)	1
105	28277	Washer, Flat	1
106	31357	Lever, Governor	1
109	31707	Spacer	1
110	30668	Shaft, Mechanical Governor	1
111	30591	Gear Assy., Governor	1
112	29193	Ring, Retaining	2
113	30588A	Spool, Governor	1
114	27793	Clip, Conduit	1
115	28942	Screw, Hex Hd. Sems	1
117	30622	Extension, Blower Housing	1
119	650128	Screw, Fil. Hd. Sems	1
121	30688	Screw, Hex Hd. Cap. Sems	1
122	27275	Clip, Hi-Tension Wire Ret.	2
123	650490	Washer, Belleville	1
124	8116	Nut, Hex	1
126	32583	Housing, Blower	1
128	31481	Washer, Copper	1
130	31479	Washer, Fiber	1
131	29596	Screw, Fil. Hd. Mach.	2
132	8274	Lockwasher, Med. Split	2

Ref. No.	Part No.	Description	No. Used
133	32125	Cup, Starter	1
134	30962	Line, Fuel	1
135	590417	Screen, Starter Cup	1
137	30513	Screw, Hex Hd. Sems	4
139	31865	Decal, Name & Instruction	1
140	28454	Screw, Hex Hd. Cap	2
141	650586	Nut, Hex Jam	2
143	26460	Clamp, Fuel Line	2
147	590420	Starter, Rewind	1
148	610118	Cover, Spark Plug (Model V50-60052G only)	1
148	27276	Cover, Spark Plug (Model V60-70073G only)	1
150	32582	Link, Governor Spring	1
151	28670	Stud, Drive	2
152	31345	Plate, Identification	1
153	31669	Cover, Oil Bath Cleaner	1
154	31670	Bowl, Oil Bath Cleaner	1
155	30939	Cover, Cylinder Head	1
156	31778	Spring, Coil	1
159	28468	Wire, Ground	1
161	31342	Spring, Compression	1
162	650549	Screw, Fil. Hd. Mach.	1
163	31372A	Gasket Set (Incl. items marked *)	1

THE TORO PROMISE

It is Toro's policy to design and produce Toro products to provide our customers with a high level of performance and durability in normal operation. Our products, however, are produced in high volume, and it is inevitable that occasionally a unit will reach a customer with a defect in materials or workmanship which causes that unit to fall below the normal high level of Toro performance. Invariably, such a defect will be noticed in a residential product within one year, and in an institutional product within ninety days after purchase.

Recognizing this possibility, Toro has established a simple guarantee policy and procedure that is intended to assure customer satisfaction. This guarantee statement is as follows.

The Toro Promise

Toro Manufacturing Corporation promises to repair any TORO product for the original purchaser if defective in materials or workmanship. The following time periods from date of purchase apply:

Residential products . . . . . 1 year
Residential products used commercially . . 45 days
Institutional products . . . . . 90 days

The costs of parts and labor are included, but the customer pays the transportation costs. Just return any residential product to a TORO Service Dealer, or any institutional product to a TORO distributor.

Should you feel that a product is defective, and wish to rely on The Toro Promise, the following procedure is recommended

1. Contact any TORO dealer or distributor, but preferably the dealer or distributor from whom you purchased the product.
2. He will instruct you to either return the product to him, or tell you the name and address of your nearest TORO Service Dealer if the product is to be returned to such dealer.
3. Take the product and your original sales slip, or other evidence of purchase date, to the servicing dealer.
4. The servicing dealer will inspect the unit, advise you whether the product is defective and, if so, make all repairs necessary to correct the defect without extra charge to you.

If for any reason you are dissatisfied with the dealer's analysis of the defect or the service he performs, we urge you to contact us Write

TORO "Customer Care" Department
8111 Lyndale Avenue South
Minneapolis, Minnesota 55420

IMPORTANT ORDERING INSTRUCTIONS

Repair parts are available from your TORO distributor or service dealer. To insure getting correct parts without delay, please furnish the following information.

1. Serial number of your mower as shown on the name plate.
2. Part number, description and quantity of each part required.
3. Name and address where parts are to be shipped.
4. Do not order by reference number; use part number only.

CARBURETOR MODEL NO. 631115

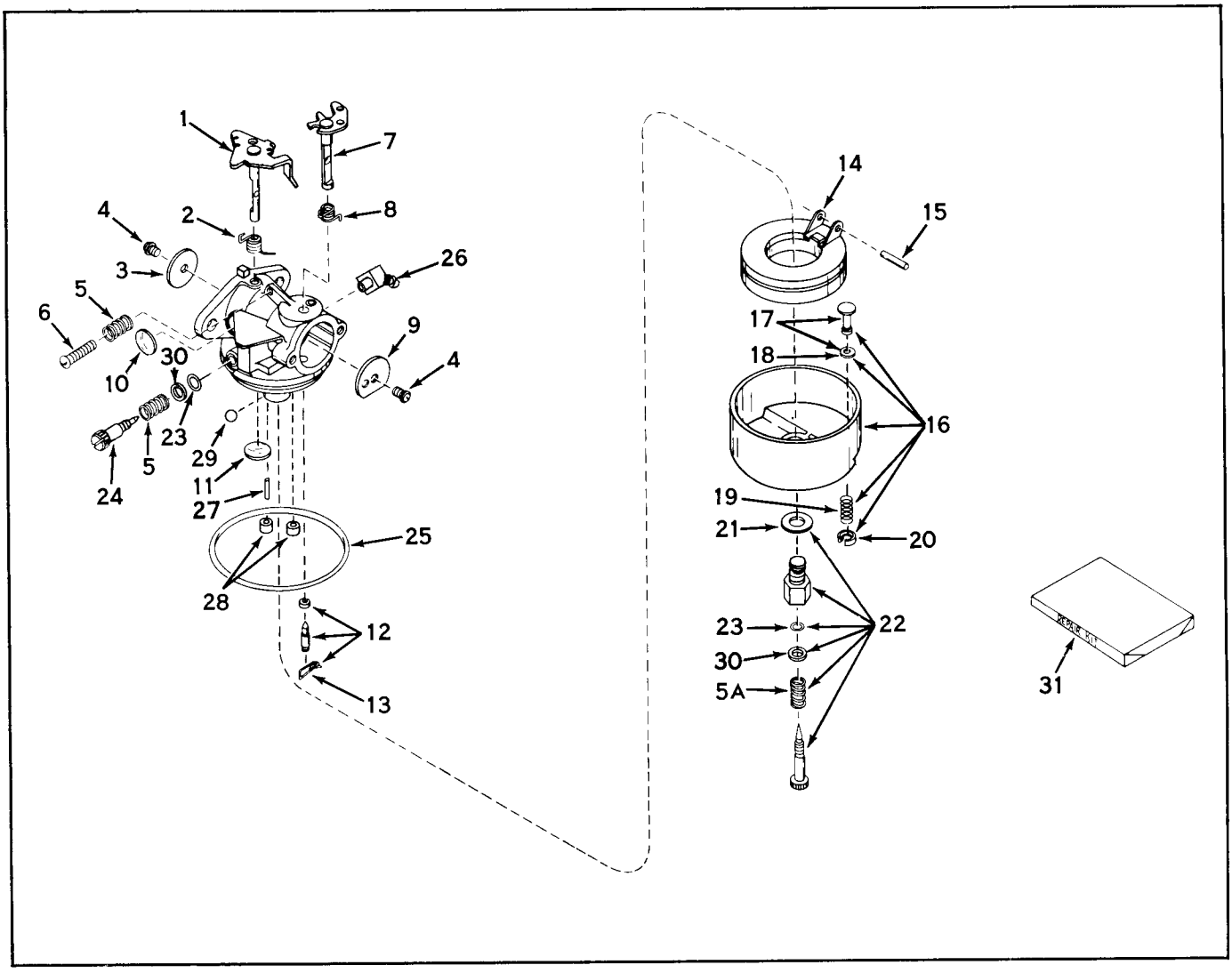

PARTS LIST

Ref. No.	Part No.	Description	No. Used
1	31834	Shaft & Lever Assy, Throttle	1
2	630731	Spring, Throttle return	1
3	631036	Shutter, Throttle	1
4	650506	Screw	2
5	630766	Spring, Idle regulating screw	2
5A	630738	Spring, Main adjustment screw	1
6	650417	Screw, Idle regulating	1
7	630973	Shaft & Lever Assy., Choke	1
8	630821	Spring, Choke return	1
9	6301037	Shutter, Choke	1
10	630748	Plug, Welch	1
11	631027	Plug, Welch	1
12	*631021	Inlet Needle, Seat & Clip Assy (Incl. No. 13)	1
13	631022	Clip, Inlet Needle	1
14	631023	Float, Carburetor	1
15	*631024	Shaft, Float	1

Ref. No.	Part No.	Description	No. Used
16	631025	Bowl & Drain Assy., Float (Incl. Nos. 17 thru 20)	1
17	27136	Plunger Assy., Drain (Incl. No. 18)	1
18	27554	Gasket, Drain Plunger	1
19	27137	Spring, Drain Plunger	1
20	27138	Retainer, Plunger spring	1
21	*27110	Gasket, Bowl-to-body	1
22	*631026	Adjustment Screw Assy., Main (Incl. Nos. 5A, 21, 23 & 30)	1
23	630740	"O" Ring, Adjustment screw	2
24	*631078	Screw, Idle adjustment	1
25	*631028	"O" Ring, Bowl-to-body	1
26	631133	Fitting, Fuel Inlet	1
27	631039	Pin	1
28	630747	Plug, Cup	2
29	631081	Ball, Aluminum	1
30	630739	Washer, Flat	2
31	631029	Repair Kit (Incl. items marked *)	1

MAINTENANCE RECORD

Date	Hours Used	Oil Change	Air Cleaner Service	Lubri-cation	Sharpen Blades	Winter Storage	Spring Service	Spark Plug Gap