Form No. 3442-284 Rev B

TORO®

Count on it.

Parts Catalog

Greensmaster® eTriFlex 3370

Traction Unit

Model No. 04590—Serial No. 408000000 and Up

Register at www.Toro.com.
Original Instructions (EN)

CE

3442-284 B

Ordering Replacement Parts

To order replacement parts, please supply the part number, the quantity, and the description of each part desired.

Understanding Reference Numbers

Each identified part in an illustration has a reference number. The reference number for a part also appears in the parts list, along with other information about the part.

This catalog uses two special reference number formats, one to indicate parts in a service assembly and another to indicate the quantity of a given part in an illustration.

Service Assembly Reference Numbers

Parts in service assemblies have reference numbers in the form a:b. The a represents the reference number of the entire service assembly and the b represents a sequential number unique to each part within the service assembly.

For example, a wheel assembly might be identified by reference number 6, the tire by 6:1, the valve by 6:2, and the wheel by 6:3. When you order the assembly identified by reference number 6, you receive all parts identified by reference numbers 6:1,6:2, and 6:3. However, you may also order any part individually. Reference numbers of this type appear in illustration and in parts lists.

Reference Numbers Indicating Quantity

In an illustration, if a reference number indicates more than one part, the reference number has the form nX y. The n represents the quantity of the part, the X is the multiplication symbol, and the y represents the reference number.

For example, in an illustration, the reference number 2X 37 means that two of the parts identified by reference number 37 are indicated.

Contents

Frame Assembly . . . 4
ROPS Assembly . . . 5
Platform Assembly . . . 6
Traction Pedal Assembly . . . 7
Brake Pedal Assembly . . . 8
Brake Actuator Assembly . . . 9
Brake Rod Assembly No. 137-2185 . . . 10
Steering Assembly . . . 11
Wheel and Tire Assembly . . . 12
Wheel Spindle Assembly No. 119-4490 . . . 13
Console Assembly . . . 14
Joystick Bracket Assembly No. 120-5280 . . . 15
Seat Plate Assembly . . . 16
Top Battery Tray Assembly . . . 17
Side Battery Tray Assembly . . . 18
Traction Assembly . . . 19
RH Wheel Motor Assembly No. 127-1525 . . . 20
Gearbox Assembly No. 127-1529 . . . 21
LH Wheel Motor Assembly No. 127-1527 . . . 22
Lift Assembly . . . 23
Suspension, Reel Motor and Basket Assembly . . . 24
Electric Reel Motor Assembly No. 138-8905 . . . 25
Electric Motor Assembly . . . 26
Basket Assembly No. 132-9599 . . . 27
Suspension Pin Position Assembly . . . 28
Hood Assembly . . . 29
Hood Assembly No. 139-8317 . . . 30
Electrical Assembly . . . 31
Wire Harness Assembly No. 122-1620 . . . 33
Controller Assembly . . . 34
Harness Bracket Assembly . . . 35
Suspension A-Arm Assembly . . . 36
Suspension Crossarm Assembly . . . 37
Top Battery Installation Assembly . . . 38
Battery Assembly No. 04070 . . . 39
Side Battery Installation Assembly . . . 40
1200 Watt Lithium Battery Charger Assembly . . . 41
Attachments and Accessories . . . 42

© 2021—The Toro® Company
8111 Lyndale Avenue South
Bloomington, MN 55420

Contact us at www.Toro.com.
Printed in the USA.
All Rights Reserved

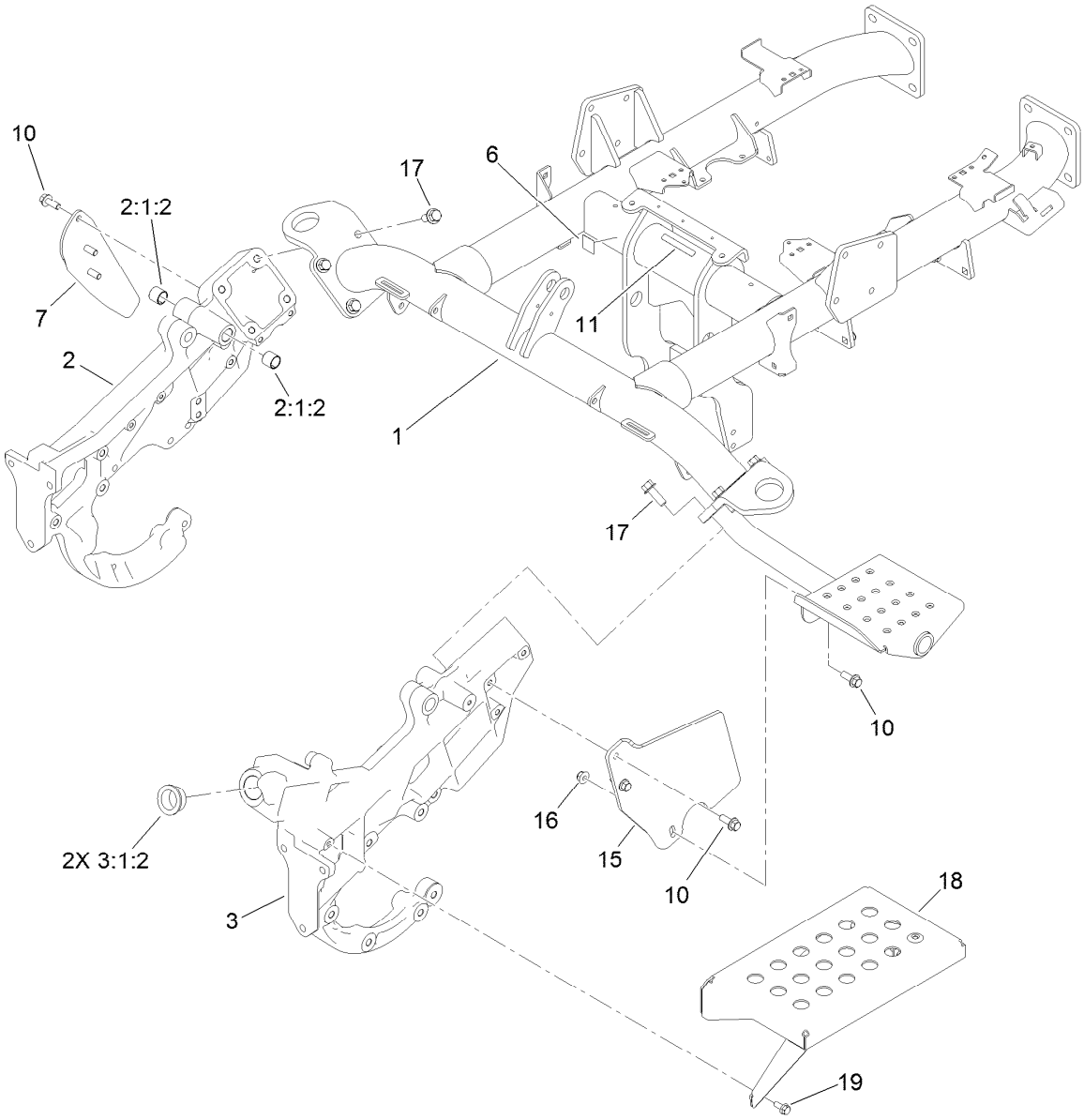

Frame Assembly

Ref.	Part Number	Qty.	Description
1	139-8585SP	1	Frame ASM
2	139-8318	1	Side Casting, RH
2:1:2	94-9609	2	Bushing-Straight
3	139-8319	1	Side Casting, LH
3:1:2	60-0080	2	Bushing
6	133-8095	1	Decal-CE
7	133-0062-01	1	Bracket-Jack
10	3234-42	6	Screw-HHF
11	133-8061	1	Decal-Warning
15	133-0004-01	1	Bracket-Step
16	104-8301	1	Nut-HF, NI
17	117-9035	8	Screw-HHF
18	132-9994-01	1	Step
19	3234-47	4	Screw-HHF

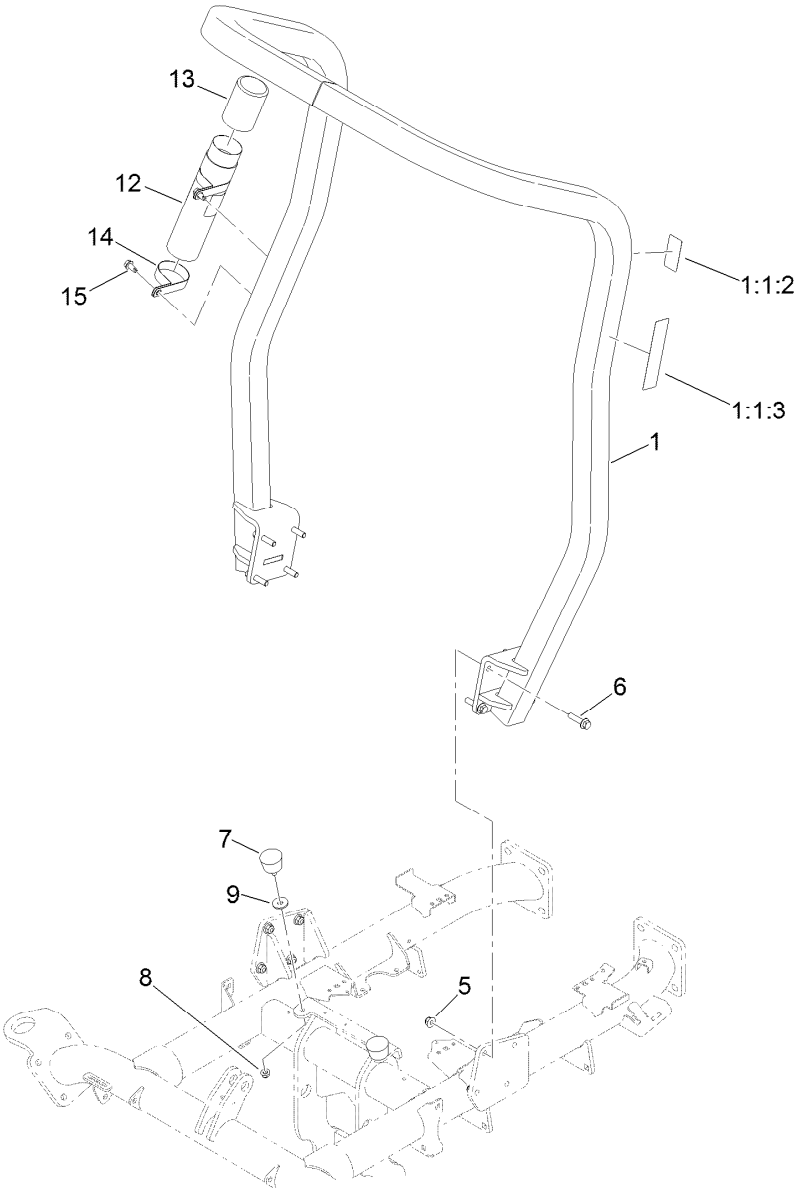

ROPS Assembly

Ref.	Part Number	Qty.	Description
1	139-8311	1	ROPS ASM
1:1:2	115-8199	1	Decal-ROPS
1:1:3	115-8226	1	Decal-ROPS
5	104-8301	8	Nut-HF, NI
6	137-7951	8	Screw-HHF
7	68-3270	2	Bumper-Rubber
8	104-8300	2	Nut-HF, NI
9	52-2861	2	Washer
12	104-7050	1	Tube-Manual
13	104-7048	1	Cap-Housing
14	2412-133	2	Clamp-R
15	32104-32	2	Screw-HWH

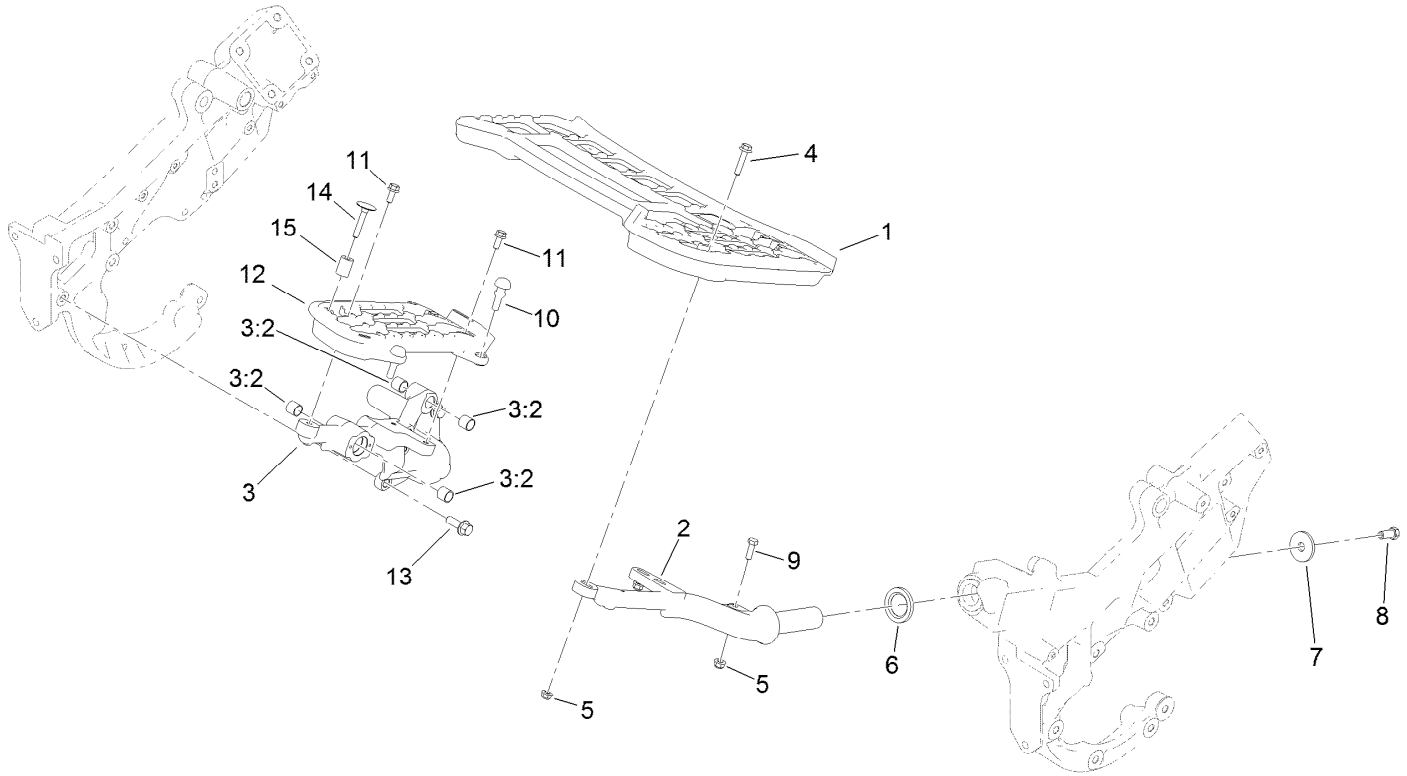

Platform Assembly

Ref.	Part Number	Qty.	Description
1	137-7768	1	Platform-LH
2	117-9006-01	1	Support-Platform, LH
3	132-9895	1	Support-Platform, RH
3:2	256-311	4	Bushing-Split
4	115-1794	3	Screw-HHF
5	104-8300	4	Nut-HF, NI
6	94-8946	1	Washer-Thrust
7	84-1560	1	Washer-Thrust

Ref.	Part Number	Qty.	Description
8	324-4	1	Screw-HH
9	322-5	1	Screw-HH
10	117-9072	2	Bumper-Rubber
11	3234-47	3	Screw-HHF
12	117-9008	1	Platform-RH
13	117-9035	3	Screw-HHF
14	115-8240	1	Screw-Elevator
15	119-0718	1	Spacer

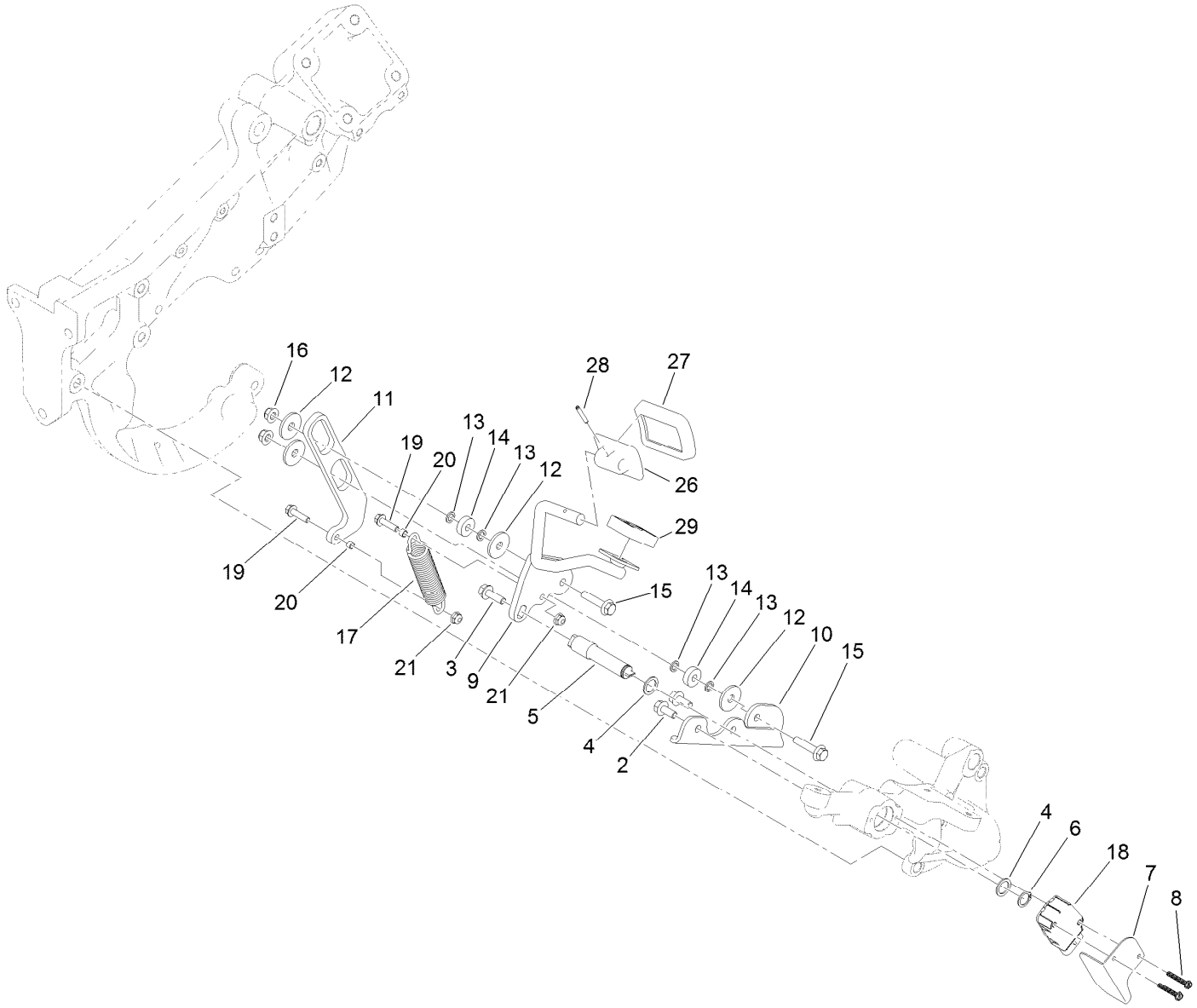

Traction Pedal Assembly

Ref.	Part Number	Qty.	Description
2	98-9940	2	Screw-HHF
3	115-5142	1	Screw-HHF
4	7-3590	2	Washer
5	132-9852	1	Shaft-Pedal
6	32151-62	1	Ring-Retaining
7	121-7035	1	Shield-Sensor
8	692501	2	Screw-SHWH
9	137-7814-01	1	Rod-Traction
10	137-7811-01	1	Bracket-Control, Motion
11	139-8405	1	Link-Connecting
12	107675	4	Washer
13	75-5470	4	Spacer-Bearing

Ref.	Part Number	Qty.	Description
14	251-259	2	Bearing-Ball
15	115-1794	2	Screw-HHF
16	104-8300	2	Nut-HF, NI
17	137-7944	1	Spring-Extension
18	122-0917	1	Sensor-Position
19	120-4654	2	Screw-HHF
20	121-2015	2	Spacer
21	104-7201	2	Nut-HF, NI
26	117-9507	1	Pedal-Accelerator
27	74-9100	1	Pad-Pedal, Forward
28	32121-45	1	Pin-Spring
29	74-9110	1	Pad-Pedal, Reverse

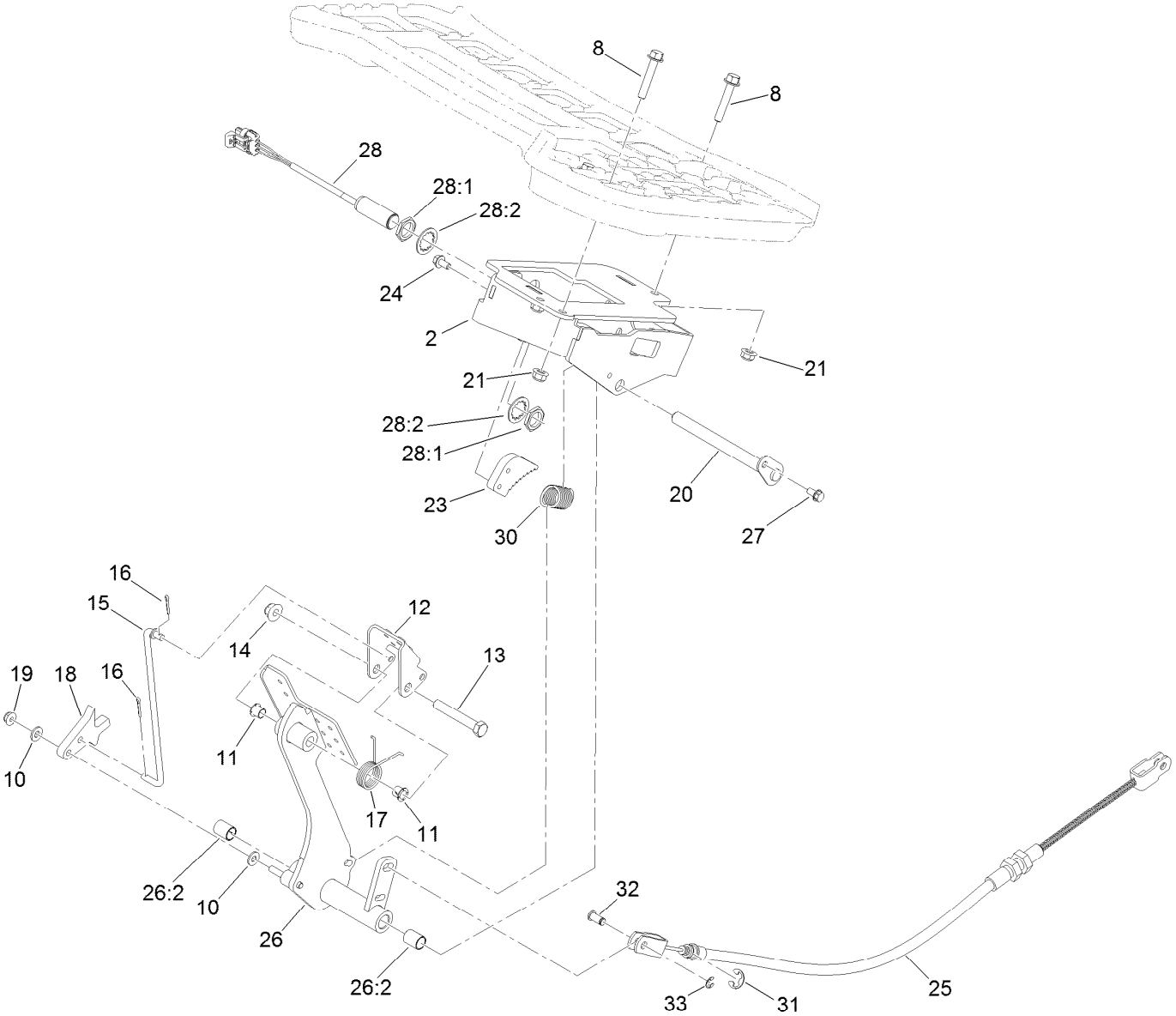

Brake Pedal Assembly

Ref.	Part Number	Qty.	Description
2	132-9890-03	1	Support-Pedal
8	94-5780	3	Screw-HWH
10	3256-22	2	Washer-Flat
11	52-2891	2	Bushing-Flanged, Nylon
12	99-7963-03	1	Pedal-Park
13	323-12	1	Screw-HH
14	104-8301	1	Nut-HF, NI
15	115-0129	1	Rod-Pawl, Brake
16	3272-6	2	Pin-Cotter
17	99-7140	1	Spring-Torsion
18	117-0238	1	Detent
19	104-7201	1	Nut-HF, NI
20	133-0089	1	Pivot-Pedals
21	104-8300	3	Nut-HF, NI

Ref.	Part Number	Qty.	Description
23	99-7214	1	Pawl-Brake
24	119-1065	2	Screw-HWH
25	137-7770	1	Cable-Brake
26	137-8109	1	Brake Pedal ASM
26:2	133-0090	2	Bushing-Split
27	32144-4	1	Screw-HWH
28	115-5300	1	Proximity Switch ASM
28:1	117-3207	2	Nut-Hex
28:2	117-3208	2	Washer-Lock, Internal Tooth
30	136-7316	1	Spring-Extension
31	32120-47	1	Ring-Retaining, External
32	109-6887	1	Pin-Clevis
33	701197	1	E-Ring

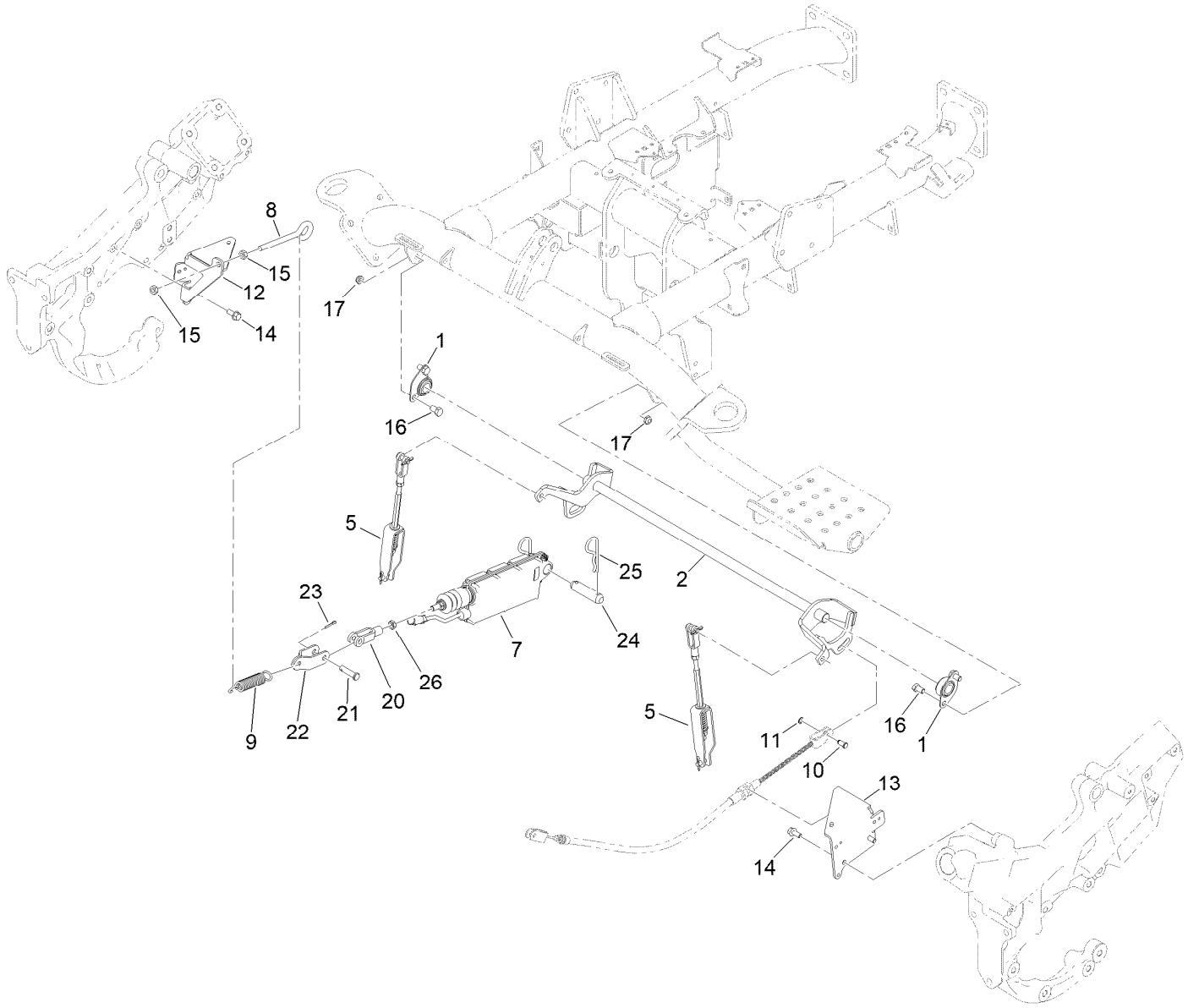

Brake Actuator Assembly

Ref.	Part Number	Qty.	Description
1	1-633102	2	Bearing-Flange, Side
2	145-0060-03	1	Cross Shaft-Brake
5	137-2185	2	Brake Rod ASM
7	137-2160	1	Actuator-Brake
8	137-8026	1	Bolt-Eye
9	93-5985	1	Spring-Extension
10	109-6887	1	Pin-Clevis
11	701197	1	E-Ring
12	137-7790-03	1	Bracket-Spring
13	137-7769-03	1	Bracket-Cable
14	98-9940	4	Screw-HHF

Ref.	Part Number	Qty.	Description
15	3217-7	2	Nut-Hex
16	323-34	4	Screw-HH
17	3296-59	4	Nut-Lock, NI
20	1-633131	1	Yoke-Linkage, Brake
21	283-10	1	Pin-Clevis
22	137-7838	1	Link ASM
23	3272-10	1	Pin-Cotter
24	27-4240	1	Pin-Cylinder
25	3290-256	2	Pin-Hair
26	3220-3	1	Nut-HJ

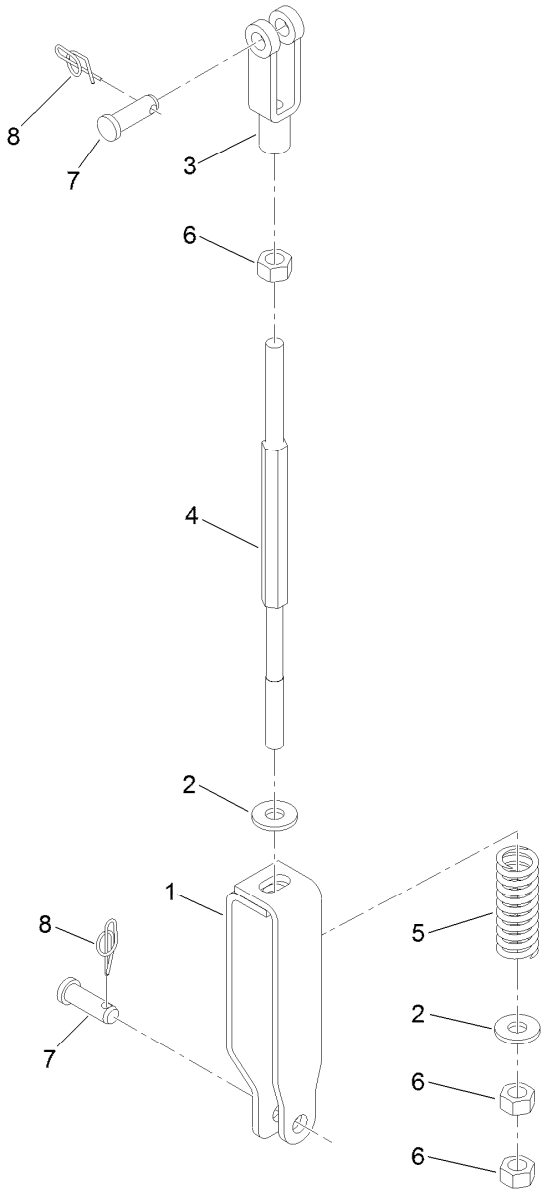

Brake Rod Assembly No. 137-2185

Ref.	*Part Number*	*Qty.*	*Description*
1	137-2180	1	Brake Clevis ASM
2	120-9646	2	Washer-Flat
3	282-2	1	Yoke
4	137-8056	1	Rod-Brake
5	137-8085	1	Spring-Seat, Compression
6	3219-2	3	Nut-Hex
7	283-1	2	Pin-Clevis
8	116-6639	2	Pin-Cotter, Locking

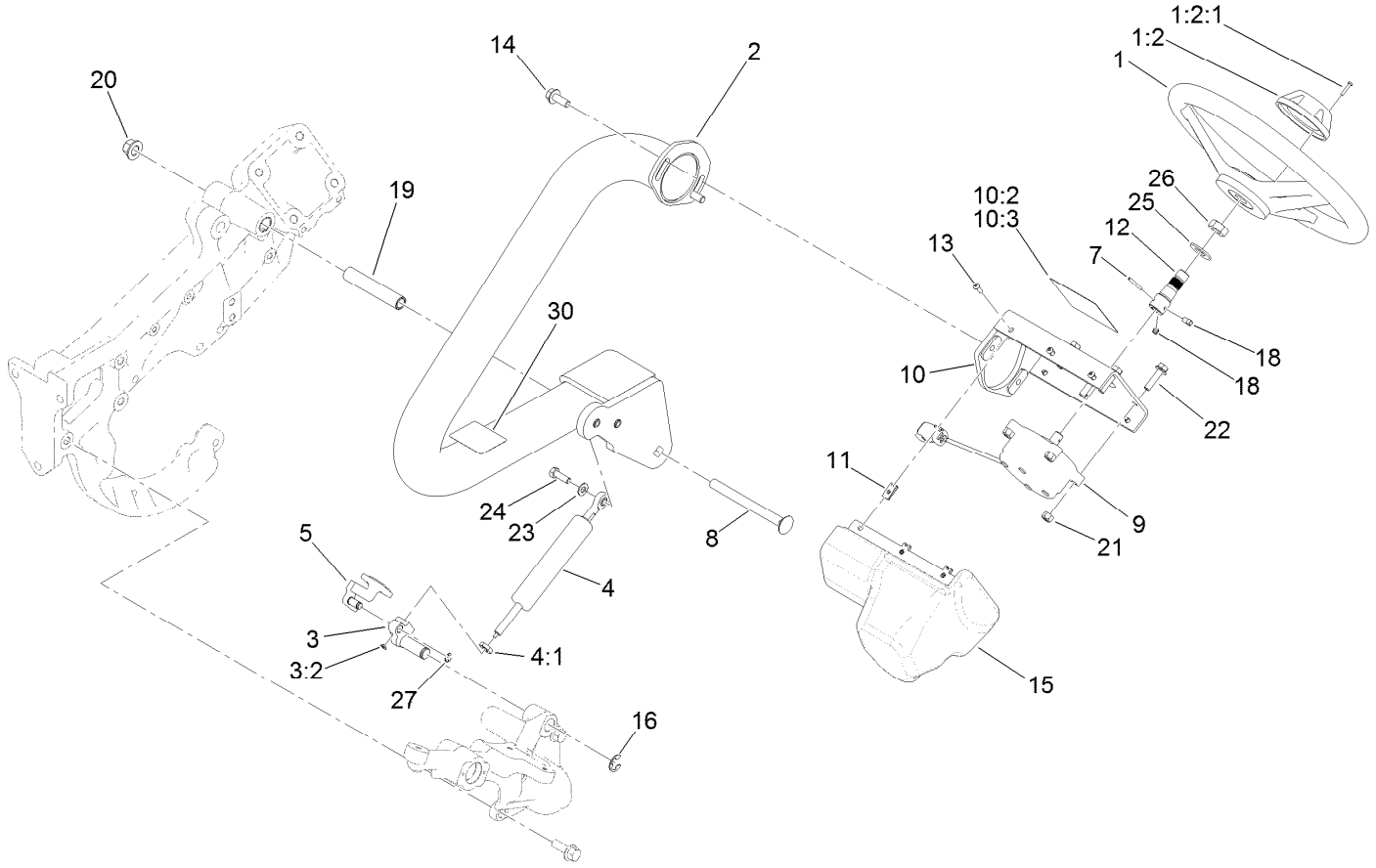

Steering Assembly

Ref.	Part Number	Qty.	Description
1	75-0560	1	Steering Wheel ASM
1:2	68-5140	1	Cap-Wheel, Steering
1:2:1	32144-21	1	Screw
2	139-8582-01	1	Steering Arm ASM [red]
3	133-9030	1	Pivot Lever ASM
3:2	133-8995	1	Bushing
4	133-9036	1	Cylinder-Gas
4:1	112-8617	1	Nut-Hex
5	138-6456	1	Lever (Mach)
7	933156	1	Pin-Roll
8	114-7723	1	Screw-CARR
9	132-9935	1	Steering Unit
10	137-8092	1	Steering Mount ASM
10:2	139-8320	1	Decal-Danger
10:3	139-8321	1	Decal-Danger, CE
11	3290-277	6	Nut-Speed

Ref.	Part Number	Qty.	Description
12	136-4262	1	Shaft-Adapter, Steering
13	3274-39	6	Screw-HSBH
14	3234-42	2	Screw-HHF
15	119-9300	1	Cover-Valve, Steering
16	32120-19	1	E-Ring
18	126-3824	2	Screw-Set, SQH
19	117-9002	1	Spacer
20	99-5107	1	Nut-Lock
21	3296-29	4	Nut-Lock, NI
22	119-4036	4	Screw-HHF
23	3256-23	1	Washer-Plain
24	322-5	1	Screw-HH
25	3256-27	1	Washer-Flat
26	3296-33	1	Nut-Lock, NI
27	701197	1	E-Ring
30	119-9346	1	Decal-Arm, Steering

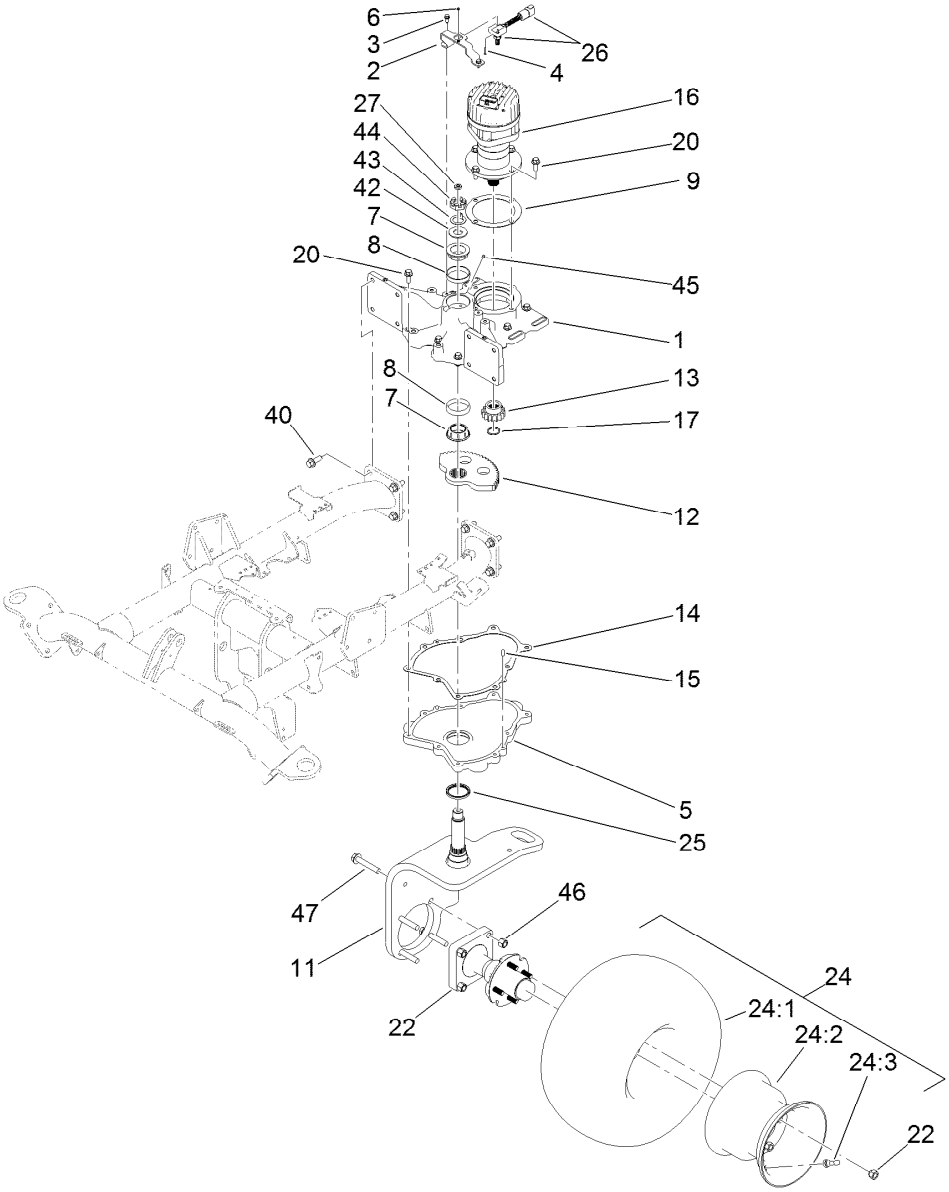

Wheel and Tire Assembly

Ref.	Part Number	Qty.	Description
1	139-8314	1	Housing-Steering
2	137-7868-03	1	Bracket-Sensor, Steering
3	32144-10	2	Screw-HWH
4	3290-313	2	Screw-SPH
5	137-8166-03	1	Housing
6	3296-52	2	Nut-Lock, NI
7	107-7589	2	Cone-Bearing (W/ Seal)
8	107-7590	2	Cup-Bearing
9	133-0347	1	Gasket
11	139-8313	1	Fork-Caster
12	137-8170	1	Gear-Spur, 64T
13	133-0346	1	Pinion-16T
14	133-0348	1	Gasket
15	136-2667	2	Pin-Dowel
16	133-0349	1	Steering Unit ASM
17	32120-2	1	Ring-Retaining
20	3234-42	13	Screw-HHF

Ref.	Part Number	Qty.	Description
22	119-4490	1	Wheel Spindle ASM
24		1	Wheel And Tire ASM ●
24:1	120-2783	1	Tire
24:2	217-60	1	Rim
24:3	232-27	1	Stem-Valve
25	108-7019	1	Seal-Shaft
26	122-0914	1	Sensor-Rotary, Body/Magnet Matched Set
27	112-8617	1	Nut-Hex
40	117-9035	8	Screw-HHF
42	137-8171	1	Washer
43	137-7943	1	Washer-Tang
44	137-7942	1	Nut-Castle
45	302-59	1	Plug-EXT Hex Spl
46	3296-23	4	Nut-Lock, NI
47	3234-40	4	Screw-HF

● Not serviced separately

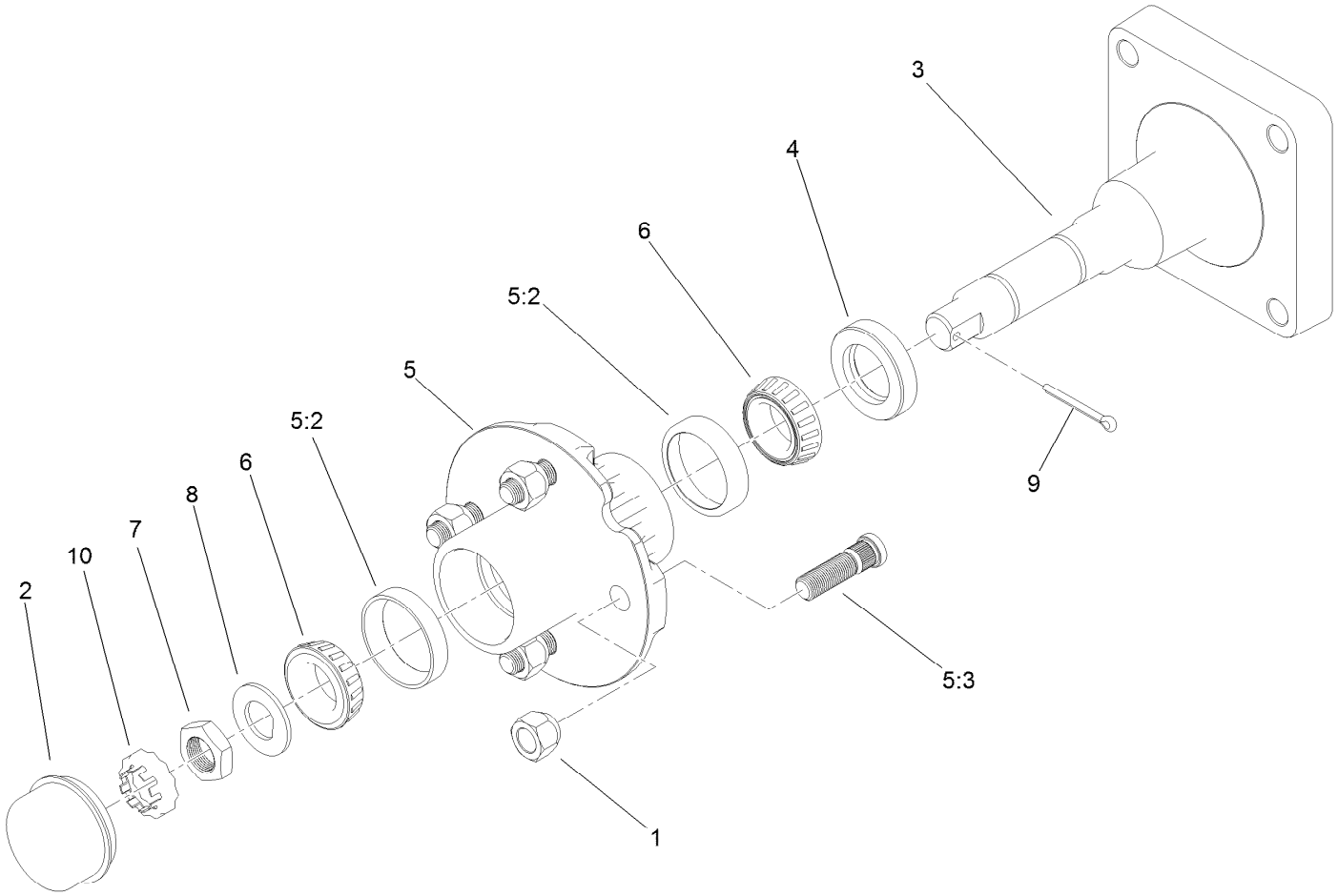

Wheel Spindle Assembly No. 119-4490

Ref.	*Part Number*	*Qty.*	*Description*
1	242-50	4	Nut-Lug
2	241-119	1	Cap-Dust
3	112-7173	1	Spindle
4	112-1690	1	Seal-Oil
5	117-9093	1	Hub ASM
5:2	254-72	2	Bearing-Cup, Tapered
5:3	114-3918	4	Stud-Wheel
6	254-92	2	Cone-Bearing, Outer
7	117-8260	1	Nut
8	117-8259	1	Washer-Spindle
9	3272-18	1	Pin-Cotter
10	93-0307	1	Nut-Lock, Retainer

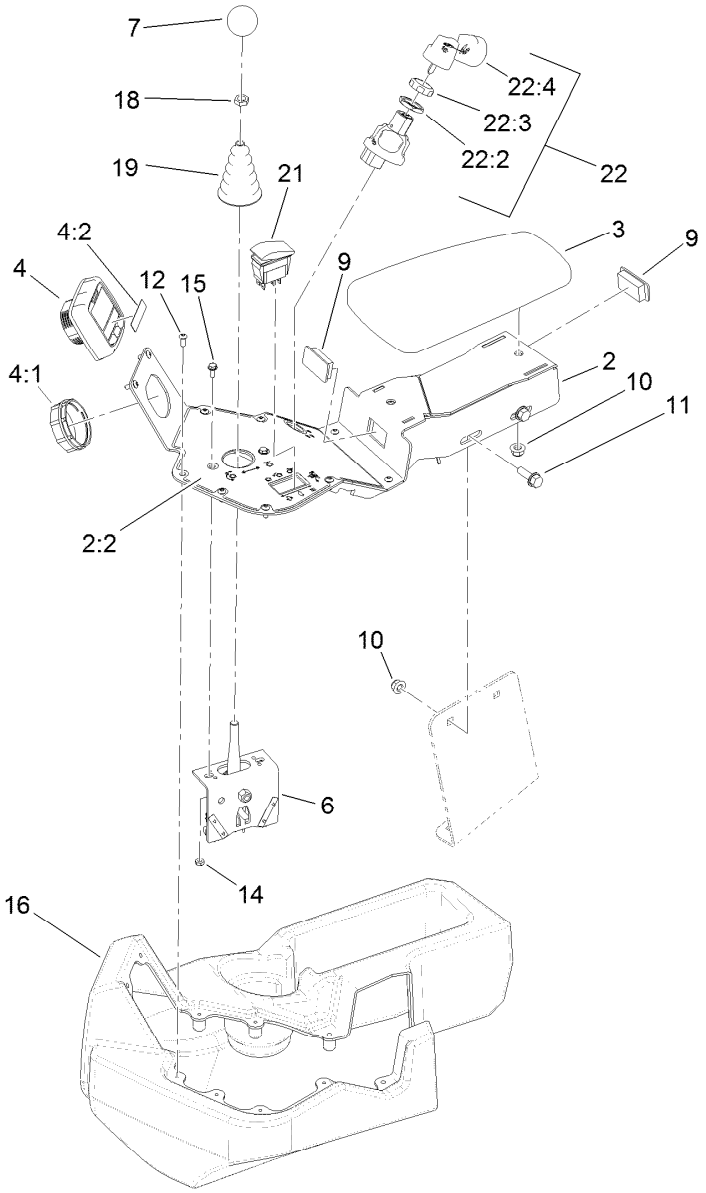

Console Assembly

Ref.	Part Number	Qty.	Description
2	137-8094	1	Console ASM
2:2	137-8058	1	Decal-Console
3	108-7602	1	Rest-Arm
4	120-6310	1	LCD Display ASM
4:1	120-4630	1	Nut-Display
4:2	120-6311	1	Decal-Display
6	120-5280	1	Bracket-Joystick
7	120-9752	1	Knob-Round, Yellow
9	99-7420	2	Plug-Hole
10	104-8300	4	Nut-HF, NI
11	3234-29	2	Screw-HHF

Ref.	Part Number	Qty.	Description
12	115-9830	10	Screw-HSBH
14	3296-12	2	Nut-Lock, NI
15	3290-321	2	Screw-HWH
16	132-9955	1	Cover-Console
18	3218-3	1	Nut-Jam
19	93-5961	1	Boot-Lever
21	112-3530	1	Switch-Rocker, On-On-On
22	106-5269	1	Ignition Switch ASM
22:2	108-8660	1	Nut-Mounting
22:3	106-5270	1	Ignition Key Set
22:4	108-8659	1	Washer-Backup

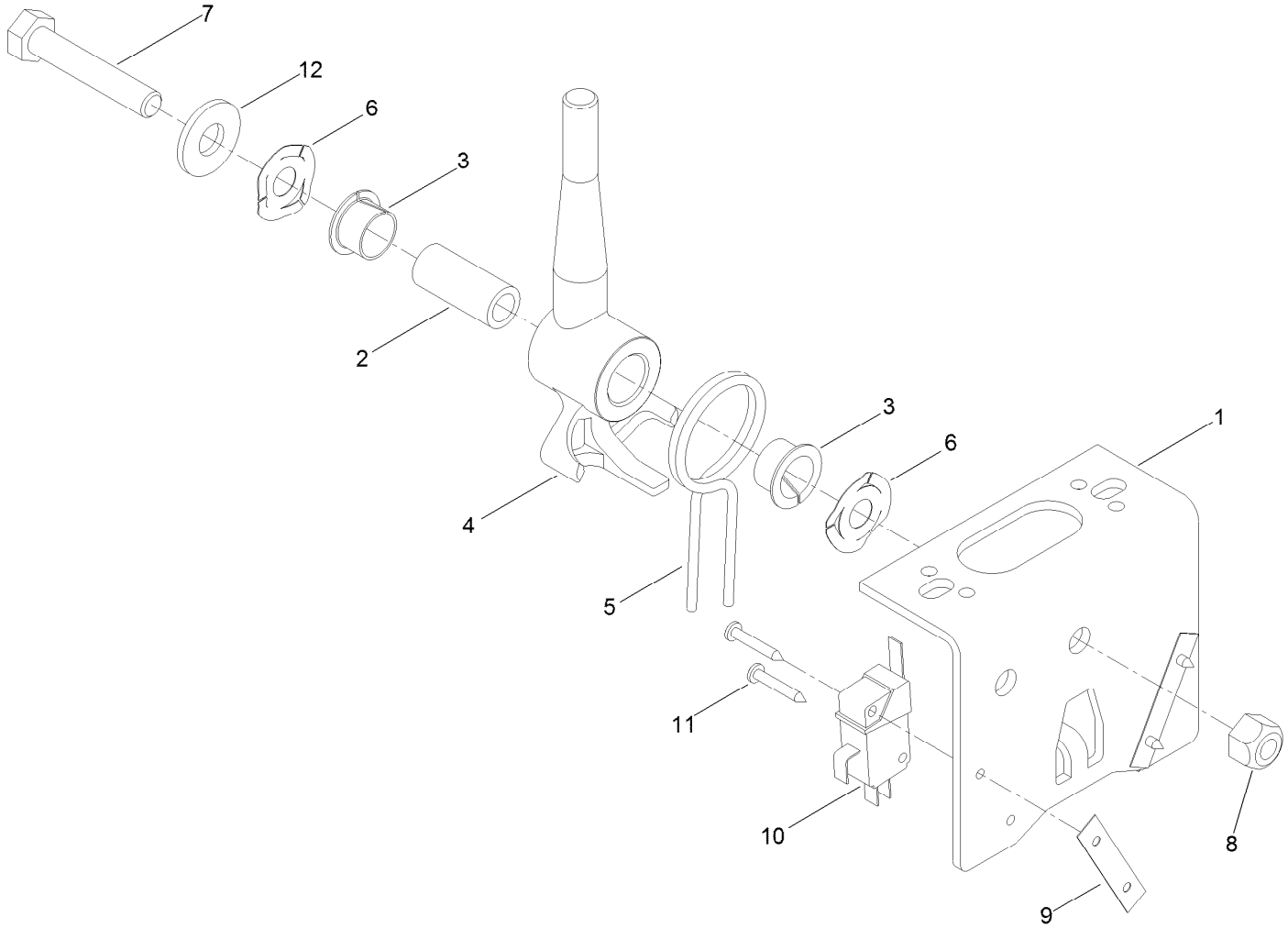

Joystick Bracket Assembly No. 120-5280

Ref.	*Part Number*	*Qty.*	*Description*
1	115-5357-03	1	Bracket-Joystick
2	106-4192	1	Spacer
3	93-5547	2	Bushing-Nylon
4	119-3540	1	Hub-Pivot, Joystick
5	105-8289	1	Spring-Torsion
6	106-4193	2	Washer-Finger, Spring
7	322-9	1	Screw-HH
8	3296-29	1	Nut-Lock, NI
9	3290-354	2	Nut-Speed
10	108-6496	2	Switch (W/Boot)
11	95-3003	4	Screw-PPHTF
12	3256-3	1	Washer-Flat

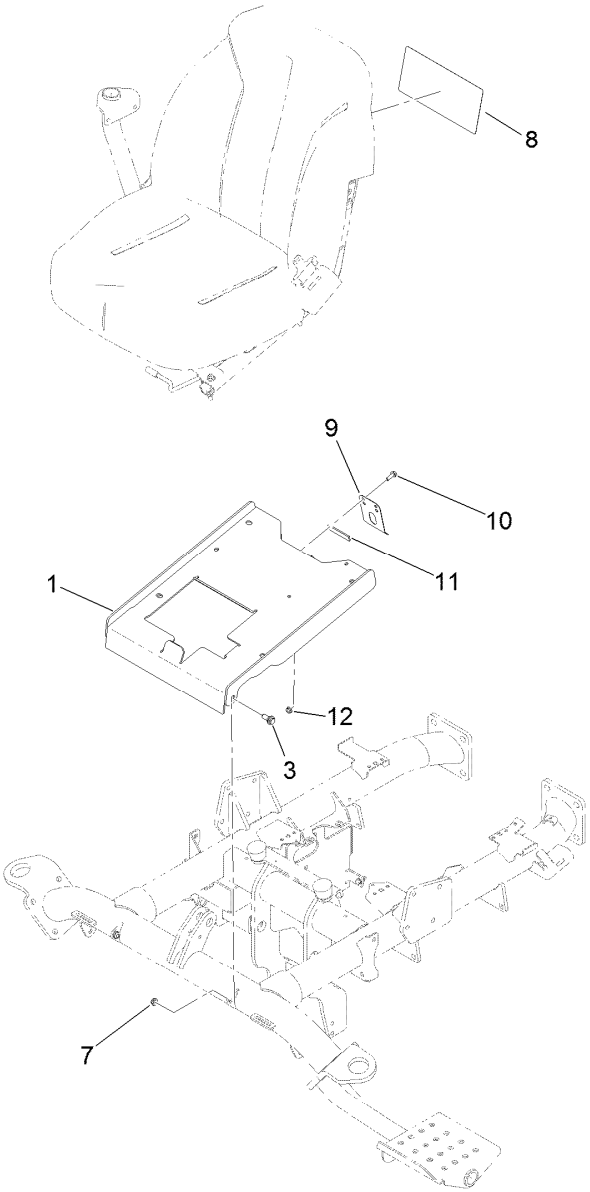

Seat Plate Assembly

Ref.	Part Number	Qty.	Description
1	139-8552-03	1	Seat Plate ASM [black]
3	94-7582	2	Bolt-Shoulder
7	3296-59	2	Nut-Lock, NI
8	137-8052	1	Decal-Service
9	139-8557	1	Latch-Seat
10	115-5103	2	Screw-HHF
11	120-5753	1	Strip-Foam
12	104-7201	2	Nut-HF, NI

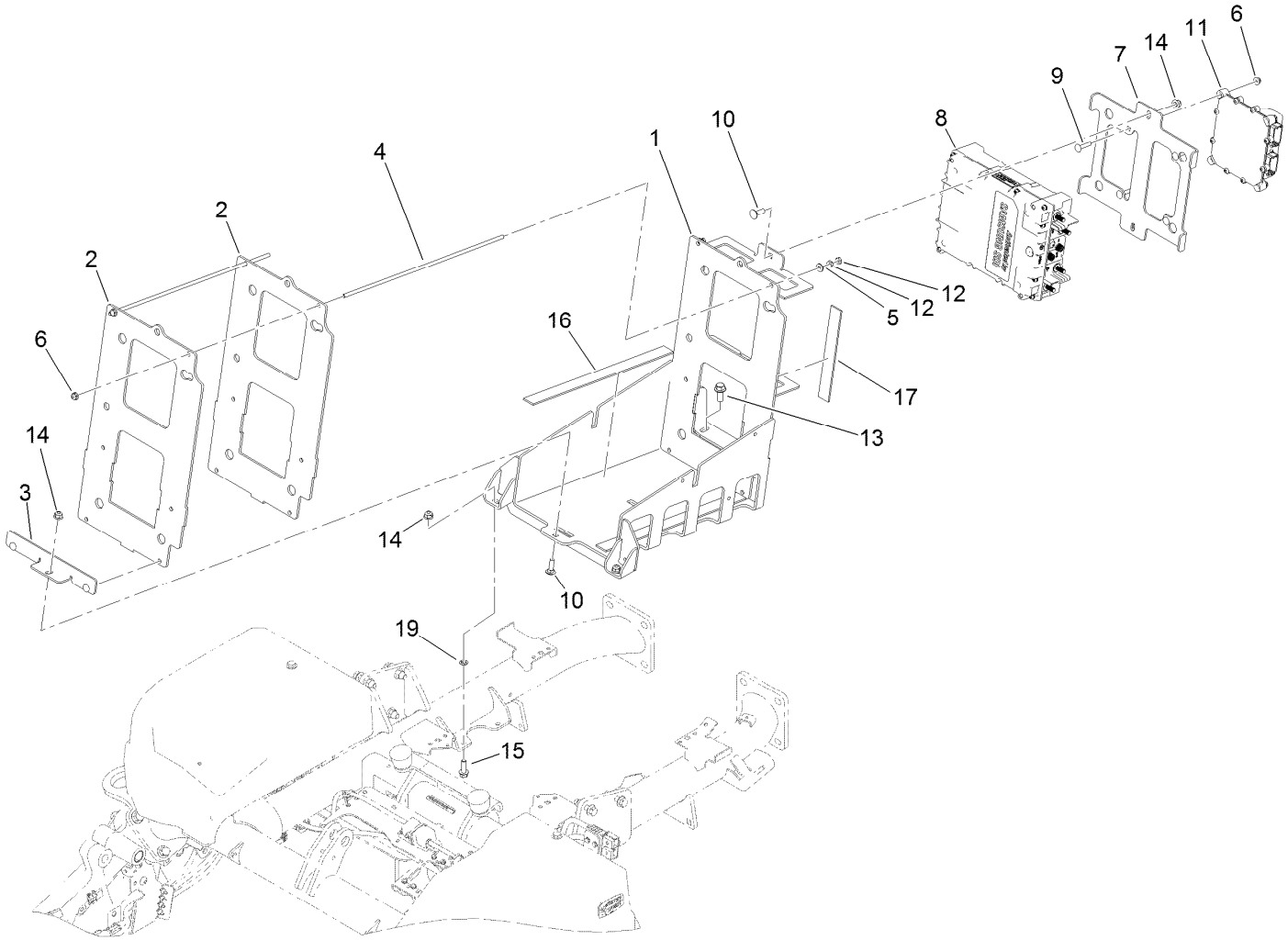

Top Battery Tray Assembly

Ref.	Part Number	Qty.	Description
1	137-7996-03	1	Main Battery ASM
2	137-8011-03	2	Support-Battery
3	137-8192-03	1	Clamp-Battery
4	137-8009	2	Rod-Support, Battery
5	3256-22	2	Washer-Flat
6	104-7201	6	Nut-HF, NI
7	137-8007-03	1	Bracket-Controller
8	137-9651	1	Controller
9	3229-3	4	Screw-CARR

Ref.	Part Number	Qty.	Description
10	3230-2	3	Bolt-CARR
11	122-1683	1	Controller-Tec 2402
12	3218-1	4	Nut-Jam
13	3234-42	2	Screw-HHF
14	104-8300	5	Nut-HF, NI
15	3234-29	2	Screw-HHF
16	137-8082	2	Strip-Foam
17	137-8083	2	Strip-Foam
19	109-5667	2	Nut-Push

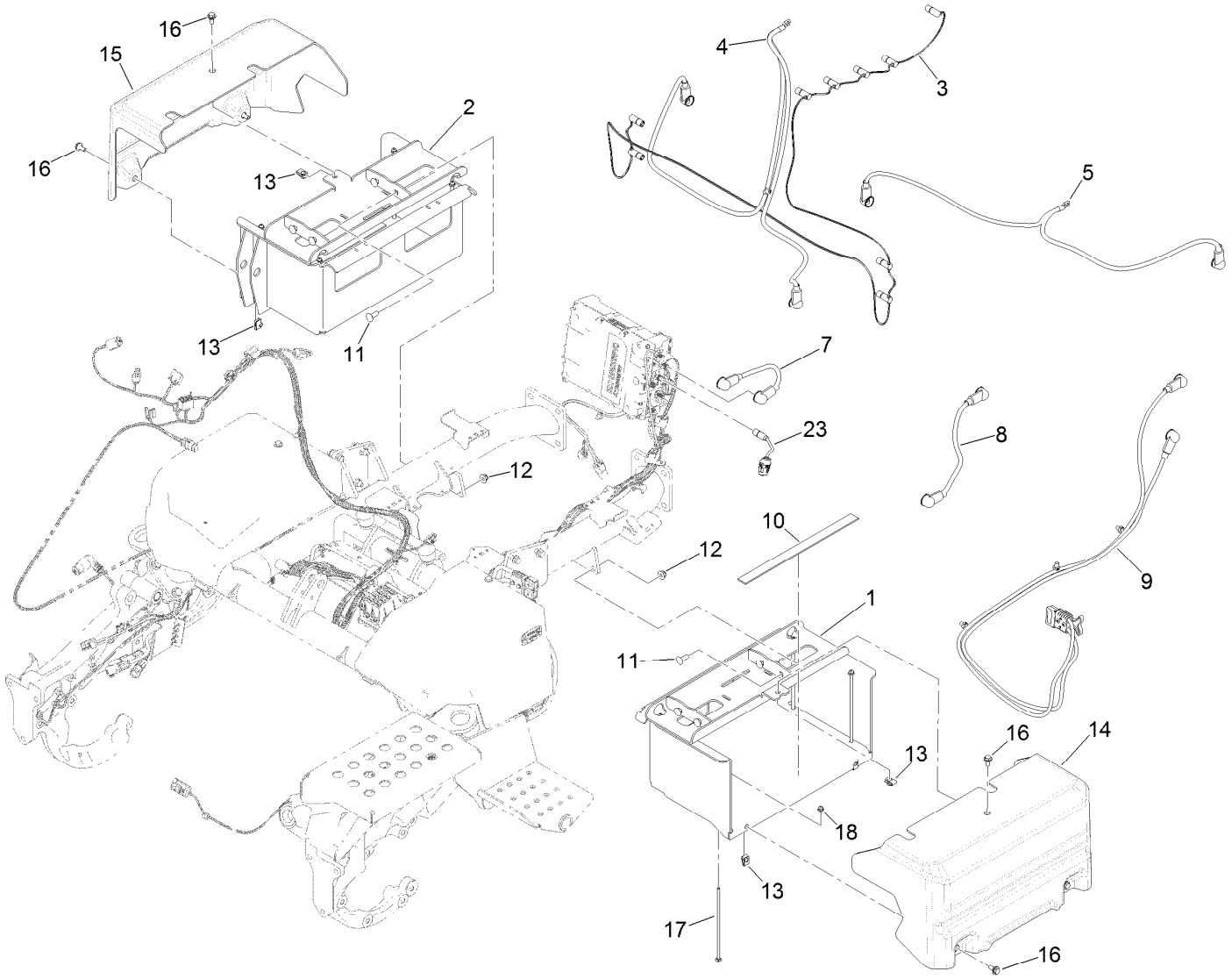

Side Battery Tray Assembly

Ref.	Part Number	Qty.	Description
1	137-8104-01	1	Tray-Battery
2	137-8105-01	1	Tray-Battery, RH
3	122-1511	1	Harness-Wire, Samsung Interface, M/S
4	122-1517	1	Cable-Battery, Positive
5	122-1518	1	Cable-Battery, Negative
7	122-1664	1	Cable-Battery, Positive
8	122-1564	1	Cable-Battery, Negative
9	122-1565	1	Cable-Battery, Pos And Neg
10	137-8082	2	Strip-Foam

Ref.	Part Number	Qty.	Description
11	3231-22	8	Screw-CARR
12	104-8301	8	Nut-HF, NI
13	112-3306	6	Nut
14	137-8046	1	Cover-Li, LH
15	137-8169	1	Cover-Li, RH
16	19-1470	6	Screw-Shoulder
17	137-8106	8	Screw-CARR
18	104-7201	8	Nut-HF, NI
23	122-1335	1	Harness-Wire, Interface(System)

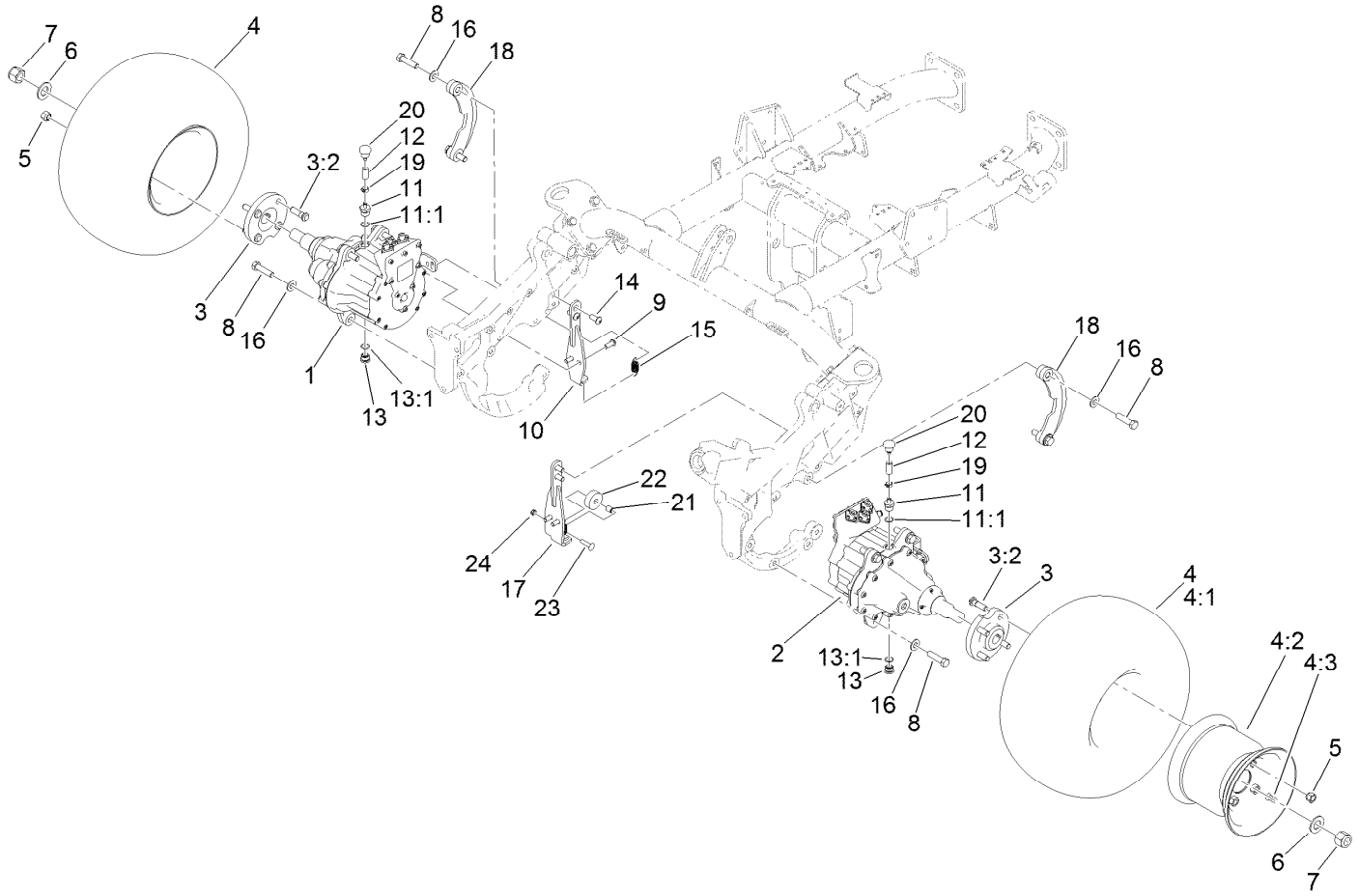

Traction Assembly

Ref.	Part Number	Qty.	Description
1	127-1525	1	RH Wheel Motor ASM
2	127-1527	1	LH Wheel Motor ASM
3	121-9264	2	Wheel Hub ASM
3:2	85-6540	4	Stud-Drive
4		2	Wheel And Tire ASM ●
4:1	120-2783	1	Tire
4:2	117-9032	1	Rim
4:3	232-27	1	Stem-Valve
5	242-50	8	Nut-Lug
6	AU496-11094	2	Washer-Flat
7	137-7973	2	Nut-Hex
8	325-8	12	Screw-HH
9	3274-94	4	Screw-HSBH
10	137-7727-01	1	Gusset-Motor, RH
11	139-8331	2	Fitting-Straight

Ref.	Part Number	Qty.	Description
11:1	237-79	1	O-Ring
12	139-8326	2	Hose-Fuel
13	133-7659	2	Plug ASM
13:1	237-79	1	O-Ring
14	3274-105	4	Screw-HSBH
15	136-7153	2	Spring-Extension
16	87-7270	12	Washer-Thrust
17	139-8348-01	1	Gusset-LH
18	132-9996-01	2	Link-Support
19	92-2379	2	Clamp-Hose
20	139-8332	2	Vent-Barb
21	88-7450	1	Spacer-Lever, Control
22	139-8346	1	Roller
23	112-6950	1	Screw-CARR
24	3296-47	1	Nut-Lock,NI

● Not serviced separately

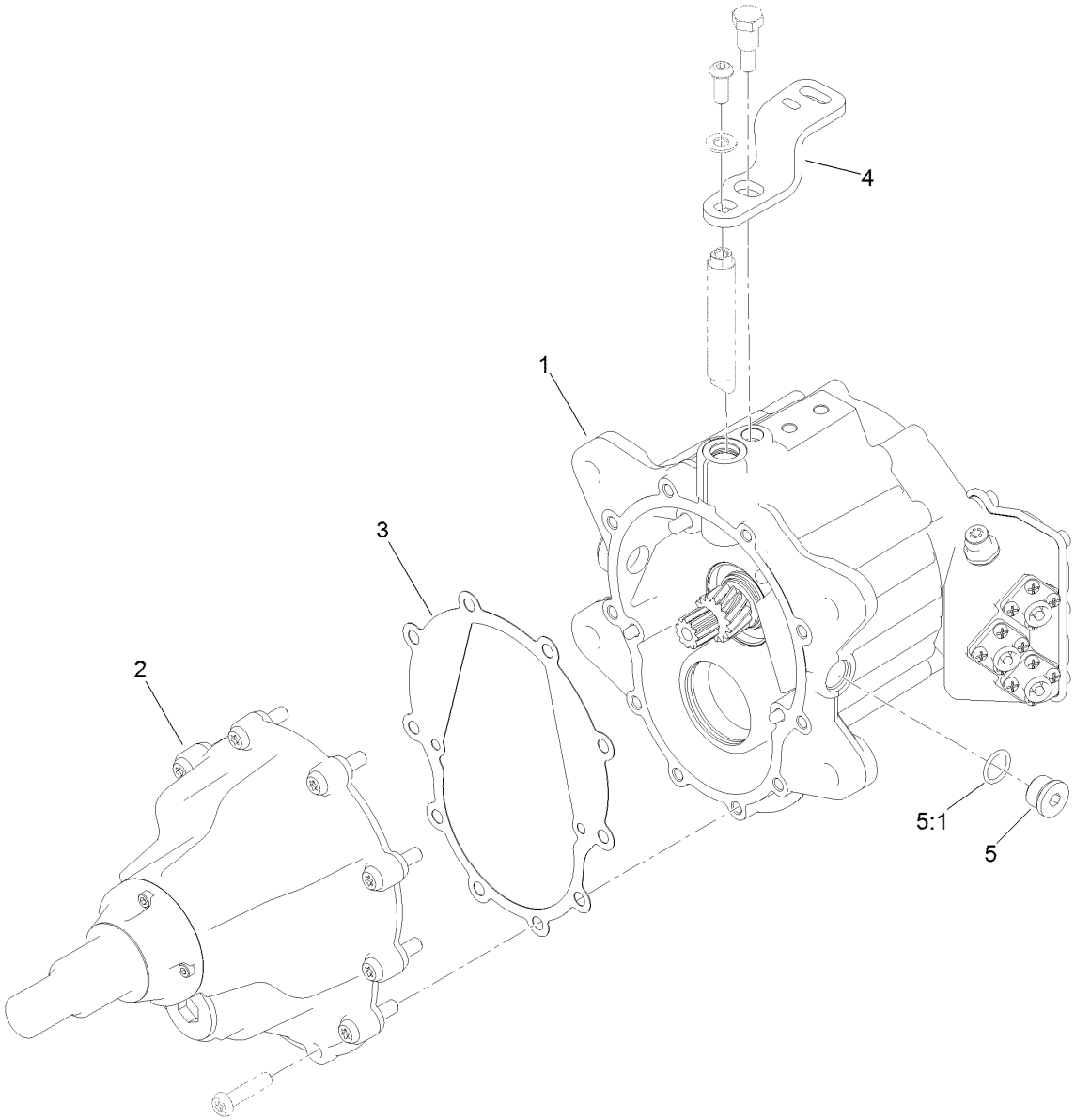

RH Wheel Motor Assembly No. 127-1525

Ref.	*Part Number*	*Qty.*	*Description*
1	127-1526	1	RH Motor ASM
2	127-1529	1	Gear Box ASM
3	121-9254	1	Gasket-Gearbox
4	132-9873	1	Lever-Brake, RH
5	353-988	2	Plug-Hex
5:1	237-79	1	O-Ring

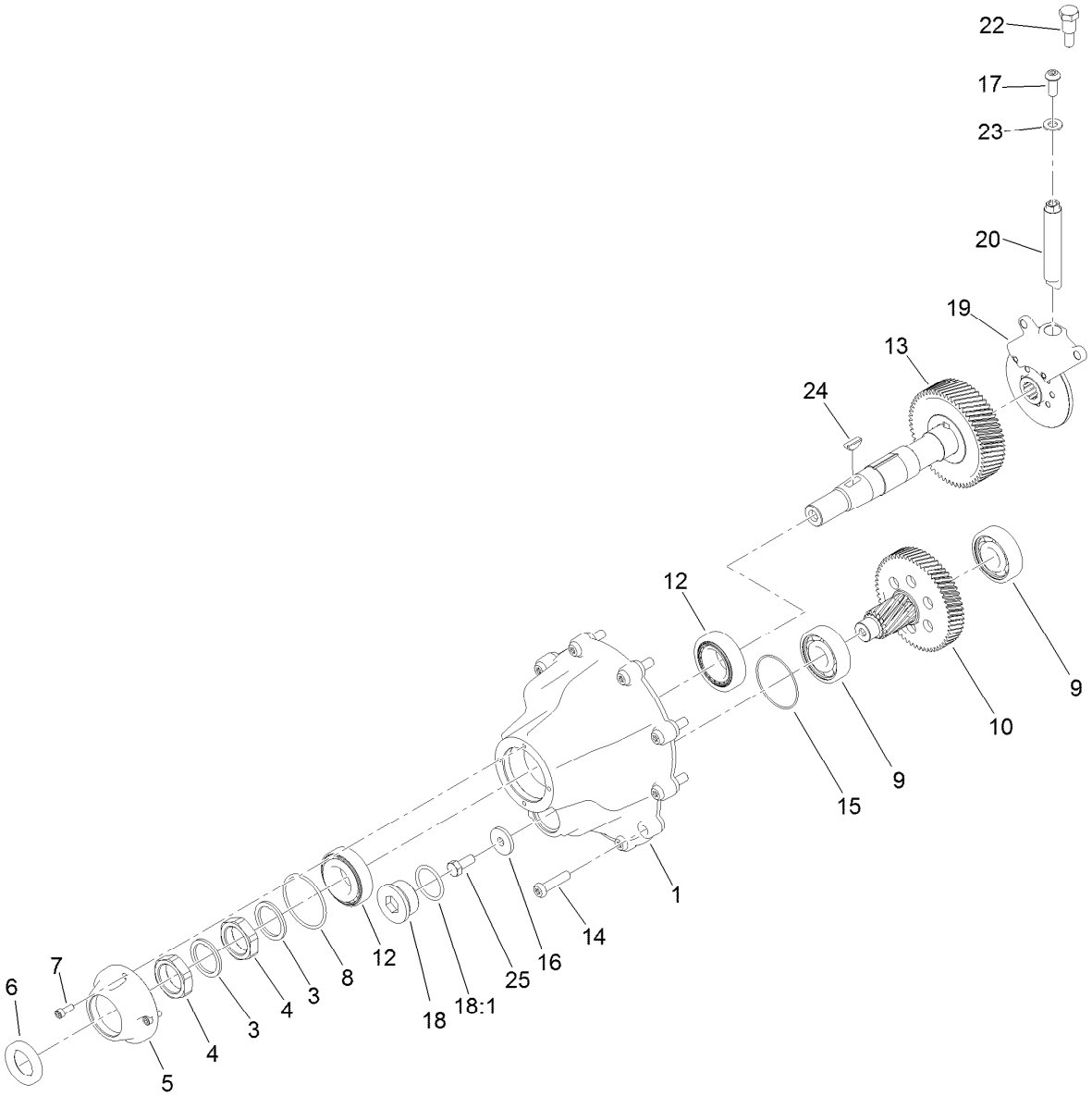

Gearbox Assembly No. 127-1529

Ref.	Part Number	Qty.	Description
1	127-1559	1	Cover-Motor, Axle
3	121-5235	2	Washer-Special
4	121-9263	2	Nut-Jam
5	127-1561	1	Cover-Nose, Axle
6	137-7857	1	Seal-Shaft
7	112-5181	4	Screw -HSH
8	108-9919	1	O-Ring
9	121-9266	2	Bearing-Ball
10	132-9978	1	Countershaft Gear ASM
12	121-9256	2	Bearing-Taper
13	132-9841	1	Shaft ASM
14	127-1519	10	Screw-BHCS

Ref.	Part Number	Qty.	Description
15	121-9273	1	O-Ring
16	132-9927	1	Washer-Flat
17	3274-96	1	Screw-HSBH
18	105-3921	1	Fitting-Plug
18:1	237-146	1	O-Ring
19	132-9974	1	Brake ASM
20	121-9247	1	Shaft-Brake
22	121-9250	1	Pin-Lever, Stop
23	120-9683	1	Washer-Plain
24	132-9904	1	Key-Woodruff #91
25	137-7767	1	Screw-HH

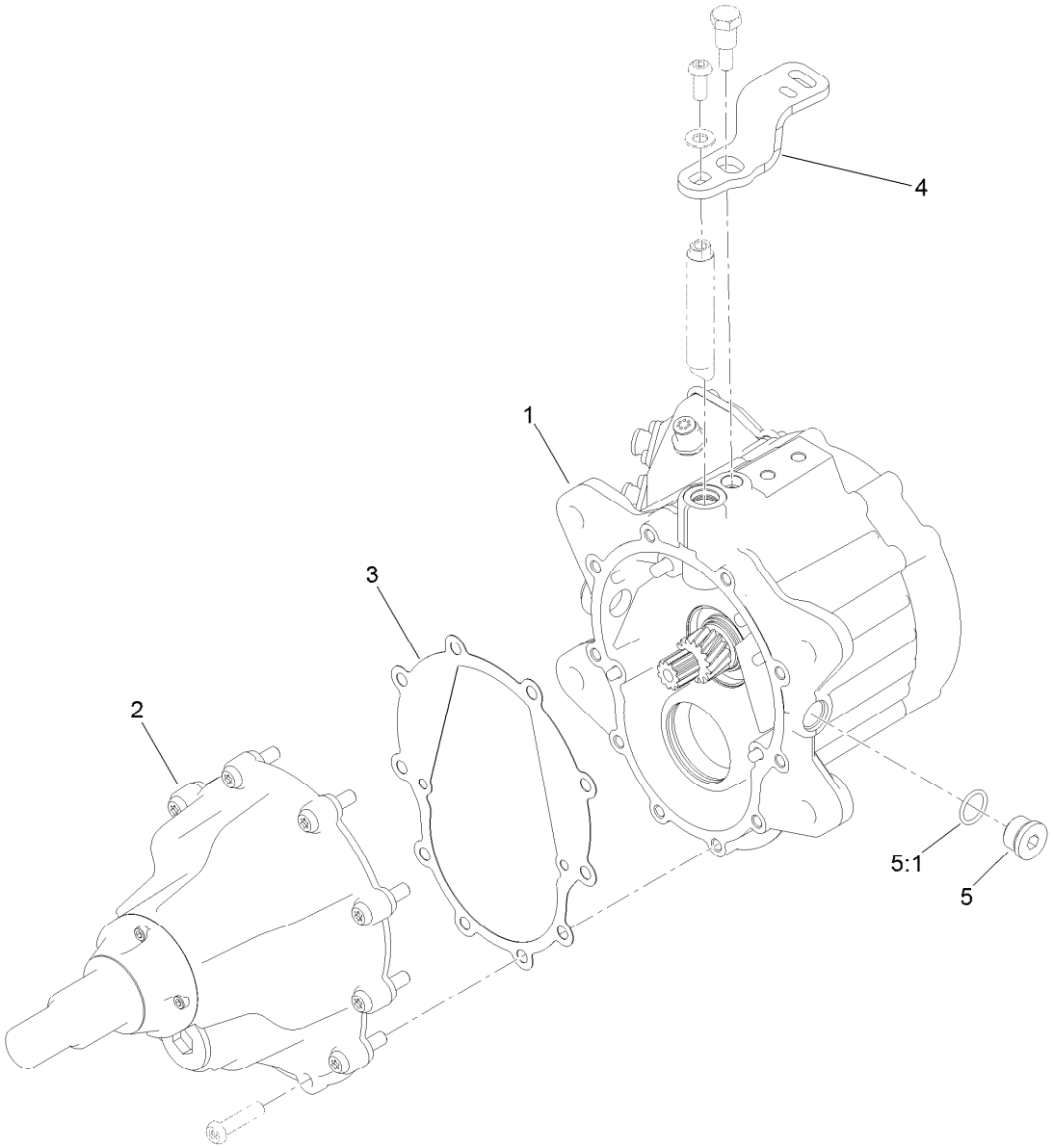

LH Wheel Motor Assembly No. 127-1527

Ref.	*Part Number*	*Qty.*	*Description*
1	127-1528	1	LH Motor ASM
2	127-1529	1	Gear Box ASM
3	121-9254	1	Gasket-Gearbox
4	132-9874	1	Lever-Brake, LH
5	353-988	2	Plug-Hex
5:1	237-79	1	O-Ring

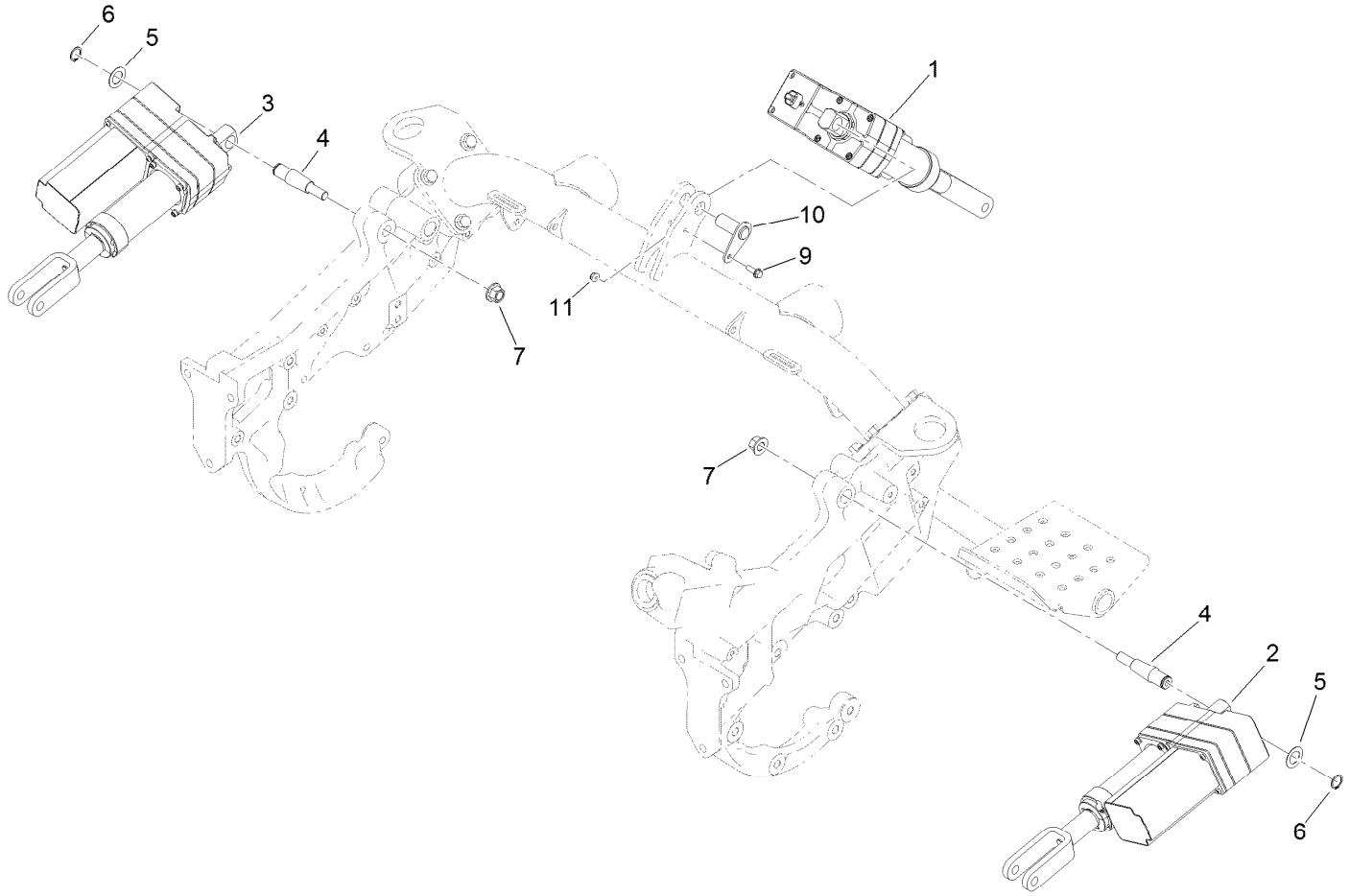

Lift Assembly

Ref.	*Part Number*	*Qty.*	*Description*
1	137-7933	1	Actuator-1 Crown
2	137-7934	1	Actuator-2 Crown
3	137-7935	1	Actuator-3 Crown
4	136-2691	2	Pin-Tapered
5	9202574	2	Washer-Flat
6	32120-72	2	Ring-Snap
7	99-5107	2	Nut-Lock
9	115-5103	1	Screw-HHF
10	137-7766	1	Pin ASM
11	104-7201	1	Nut-HF, NI

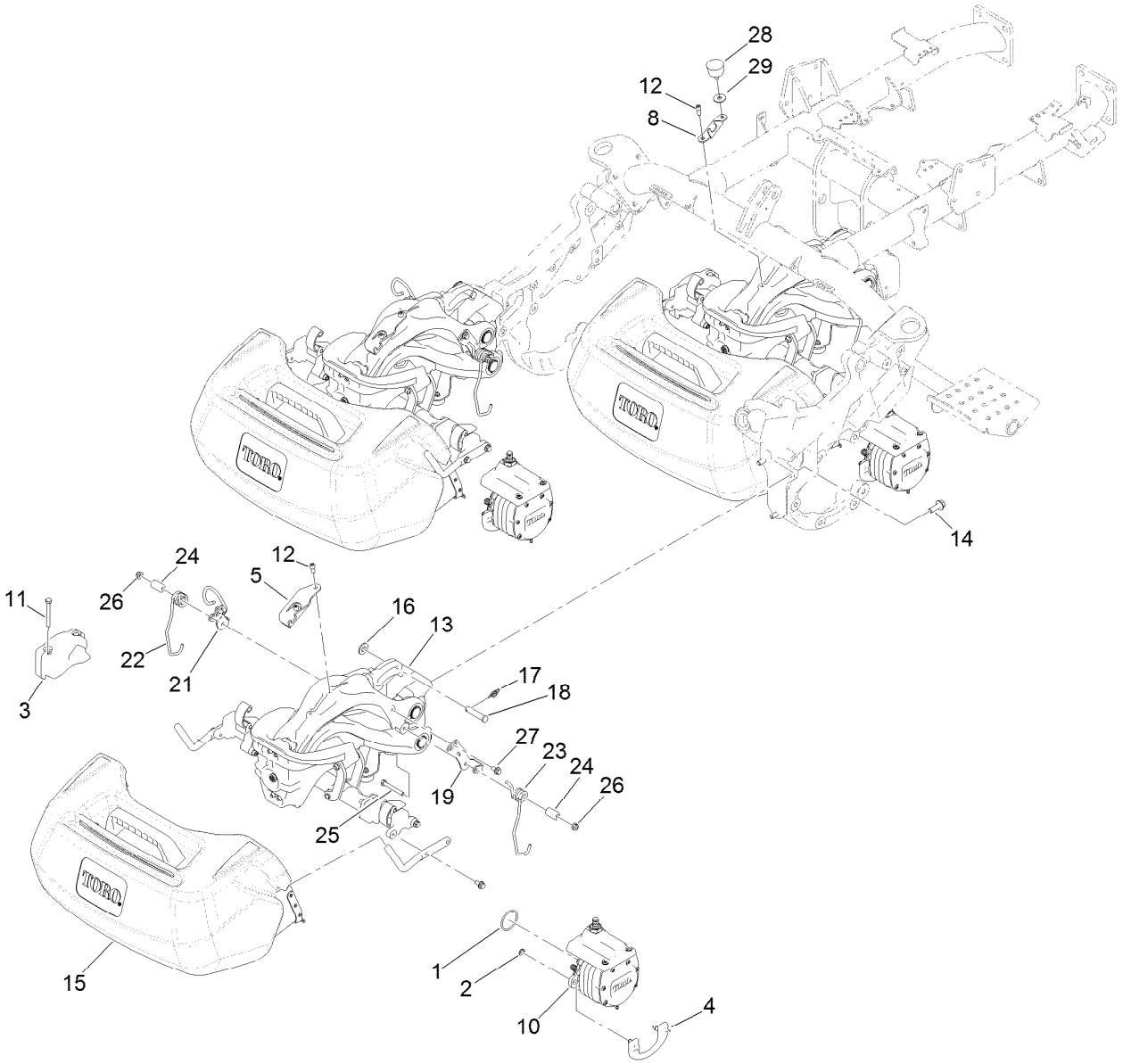

Suspension, Reel Motor and Basket Assembly

Ref.	Part Number	Qty.	Description
1	115-3298	3	O-Ring
2	133-8926	6	Ring-Retaining (Metric)
3	117-6774-03	3	Weight-Electric
4	115-5389	3	Cam-Mount, Motor
5	119-7487	2	Bracket-Clamp, Hose
8	119-7540	1	Bracket-Hose, Rear
10	138-8905	3	Electric Motor ASM
11	322-13	6	Screw-HH
12	100-2401	5	Screw-HSH
13		3	Suspension ASM ●
14	117-9035	9	Screw-HHF
15	132-9599	3	Basket ASM
16	29-8910	3	Washer
17	112-1491	3	Pin-Cotter
18	92-2739	3	Pin-Clevis
19	133-8998	3	Retainer-Spring, LH
21	133-9025	3	Bracket ASM
22	117-6826	3	Spring-Stabilizer, RH
23	117-6827	3	Spring-Stabilizer, LH
24	117-6825	6	Spacer
25	322-12	6	Screw-HH
26	104-8300	6	Nut-HF, NI
27	114-7728	6	Screw-HF
28	68-3270	1	Bumper-Rubber
29	52-2861	1	Washer

● Not serviced separately

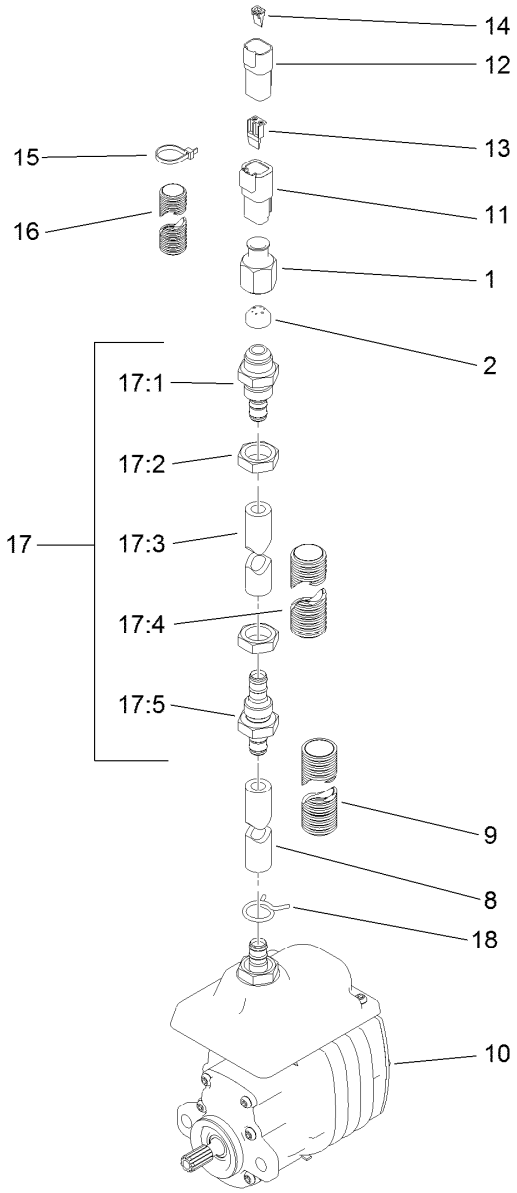

Electric Reel Motor Assembly No. 138-8905

Ref.	Part Number	Qty.	Description
1	119-7481	1	Nut-Ferrule
2	119-7480	1	Ferrule
8	119-7476	1	Hose
9	119-7558	1	Tubing-Convoluted, Slit
10		1	Motor-Electric ●
11	32160-245	1	Connector
12	32160-315	1	Connector
13	32180-083	1	Wedge
14	32180-084	1	Wedge

Ref.	Part Number	Qty.	Description
15	3290-378	4	Tie-Cable
16	120-3223	1	Tubing-Convoluted, Slit
17	120-4532	1	Hose ASM
17:1	119-7545	1	Fitting-Bulkhead
17:2	119-7457	2	Nut
17:3	119-7524	1	Hose
17:4	119-7559	1	Tubing-Convoluted, Slit
17:5	119-7544	1	Fitting-Bulkhead
18	138-8924	1	Clamp-Hose

● Not serviced separately

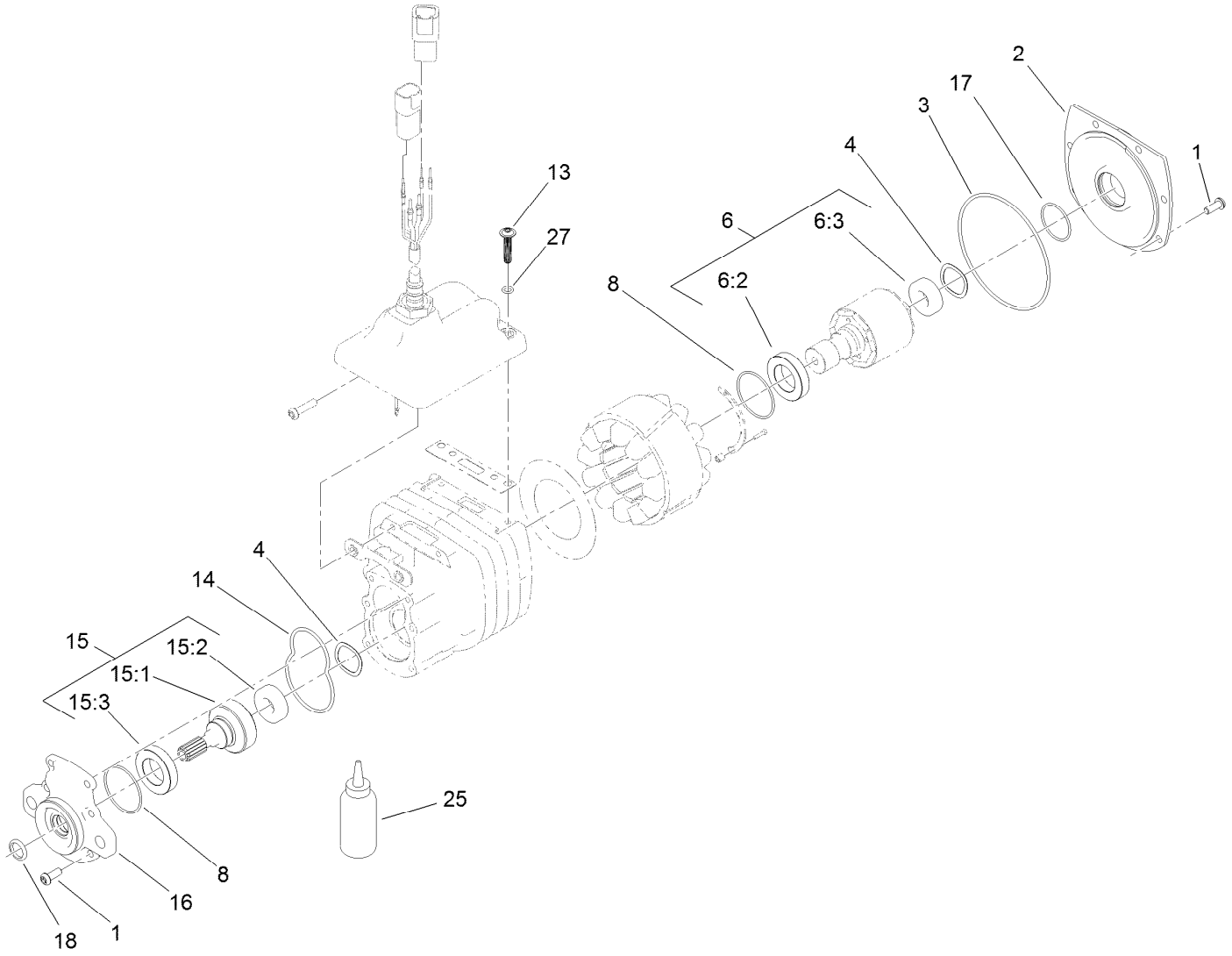

Electric Motor Assembly

Ref.	Part Number	Qty.	Description
1	120-4559	12	Screw-BHCS
2	115-4779	1	Cover-Motor
3	112-9609	1	O-Ring
4	112-5163	2	Washer-Wave
6	119-7450	1	Rotor ASM
6:2	112-5158	1	Bearing-Ball
6:3	120-4557	1	Bearing
8	112-9616	2	O-Ring
13	138-8918	2	Screw-Fbhcs
14	112-9611	1	O-Ring

Ref.	Part Number	Qty.	Description
15	115-4782	1	Output Gear ASM
15:1	112-5153	1	Gear-Output
15:2	120-4557	1	Bearing
15:3	112-5158	1	Bearing-Ball
16	115-4777	1	Cover-Gearbox
17	119-1156	1	O-Ring
18	119-7451	1	Seal-Oil
25	136-8595	1	Grease-Synthetic
27	138-8916	2	O-Ring

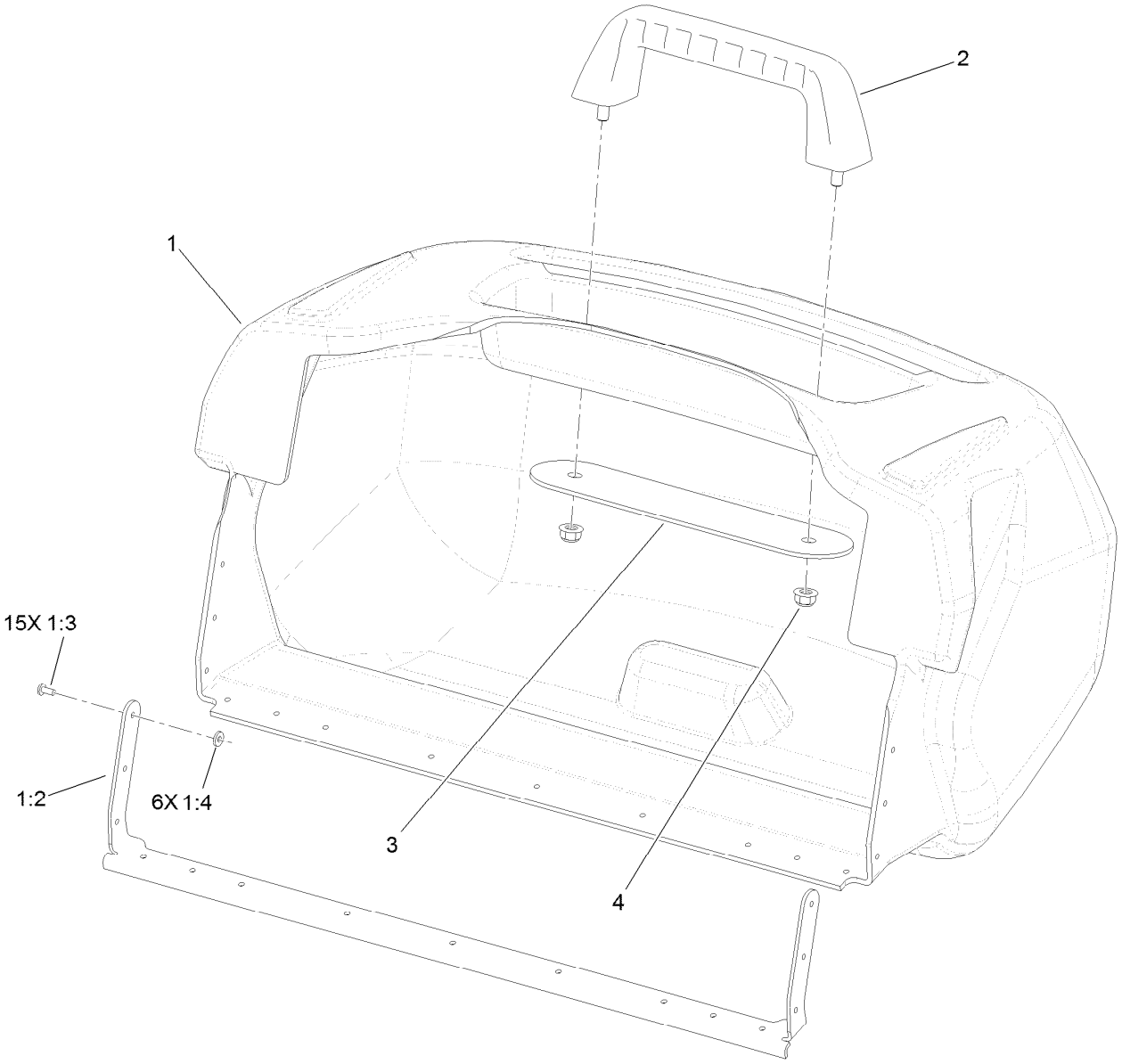

Basket Assembly No. 132-9599

Ref.	Part Number	Qty.	Description
1	132-9510	1	Basket Assembly
1:2	132-3806	1	Support-Basket
1:3	3269-25	15	Rivet-Pop
1:4	3256-75	6	Washer-Flat
2	117-8088	1	Handle-Grab
3	117-8092-03	1	Plate-Mounting
4	104-8300	2	Nut-HF, NI

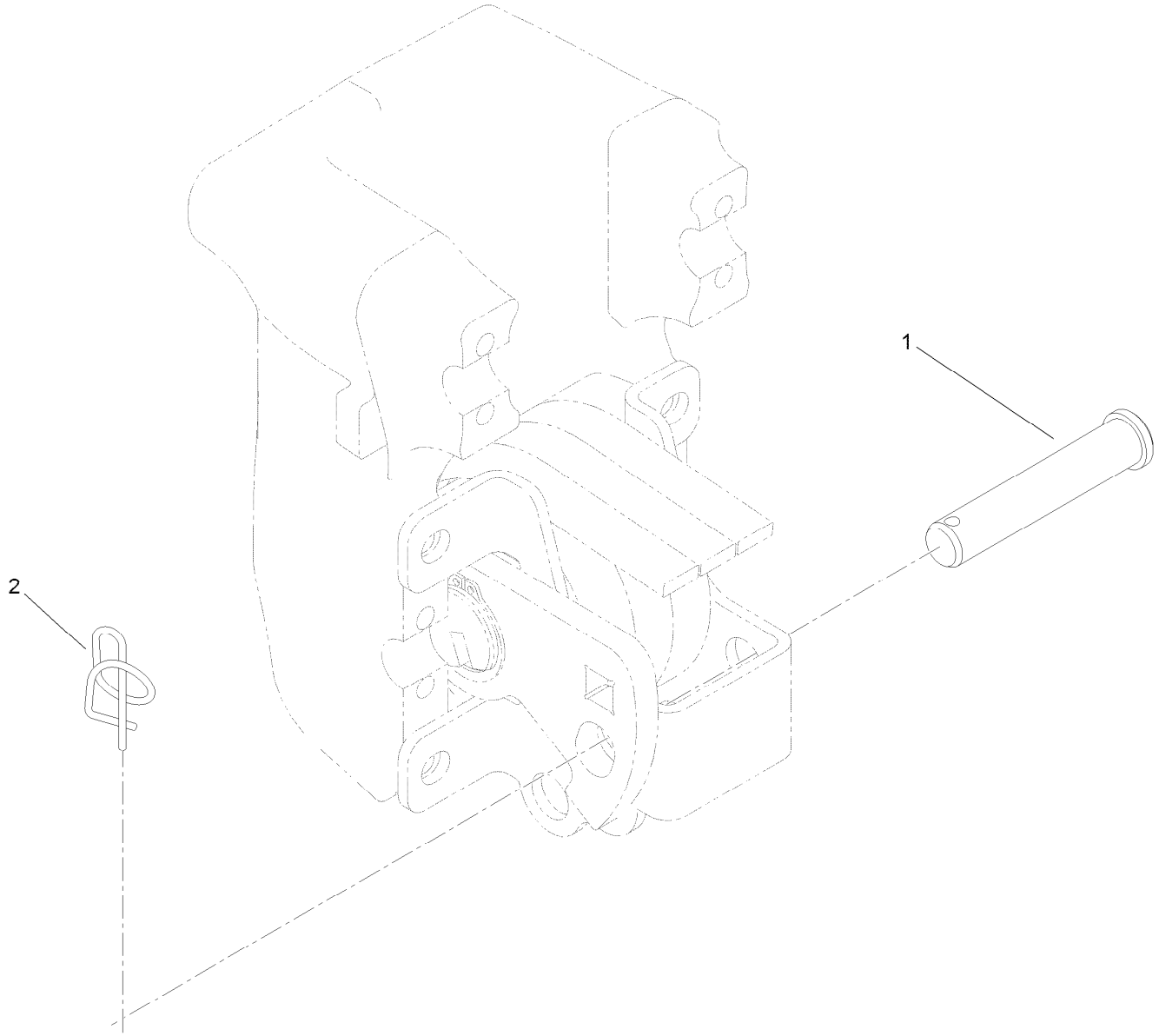

Suspension Pin Position Assembly

Ref.	Part Number	Qty.	Description
1	100-6541	3	Pin-Clevis
2	112-1491	3	Pin-Cotter

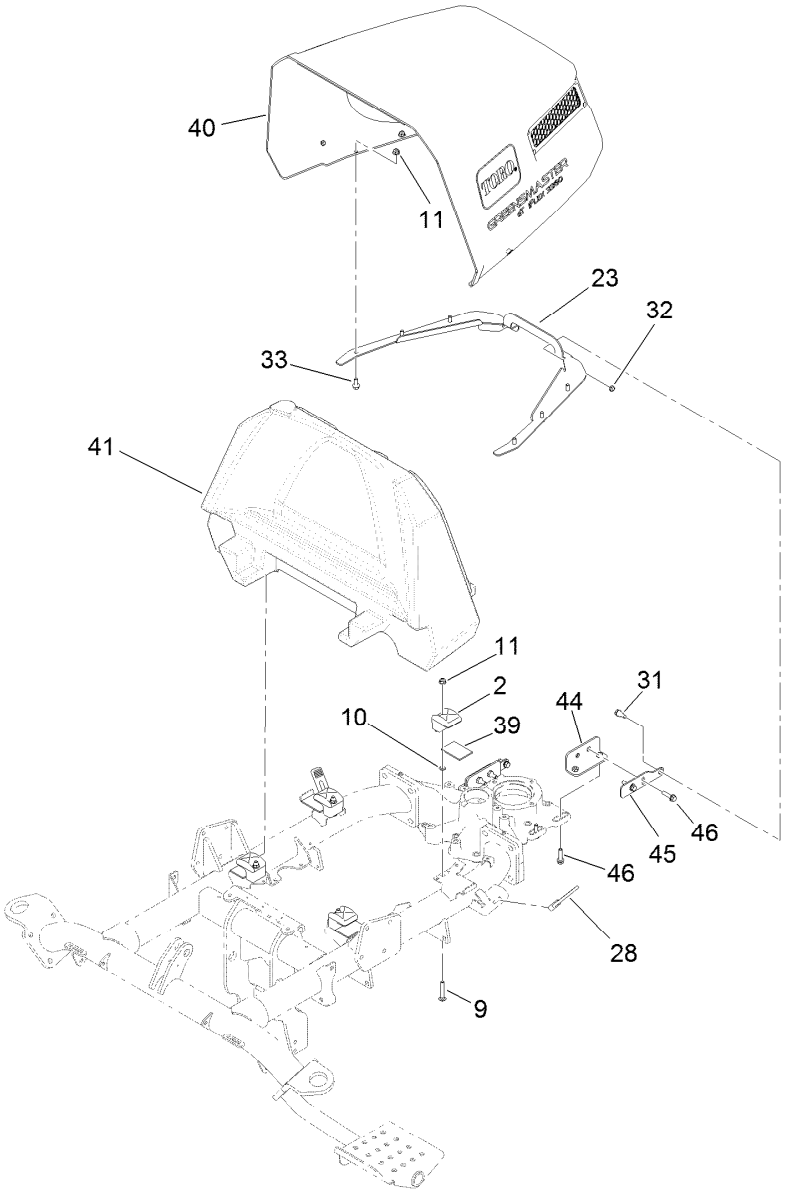

Hood Assembly

Ref.	Part Number	Qty.	Description
2	107-4543	4	Clamp
9	3230-6	4	Bolt-CARR
10	109-5667	4	Nut-Push
11	104-8300	10	Nut-HF, NI
23	137-2193-03	1	Bracket-Hinge, Shroud
28	131-8402	2	Strap-Down, Hold
31	115-1958	2	Bolt-Shoulder
32	99-6007	2	Nut-Lock, NI
33	3234-47	6	Screw-HHF
39	136-4259	4	Foam-Strip, Tank
40	139-8317	1	Battery Hood ASM
41	137-7829	1	Cover-Battery
44	137-2242-03	2	Bracket-Hood
45	137-7914	2	Bracket-Hood
46	119-4036	8	Screw-HHF

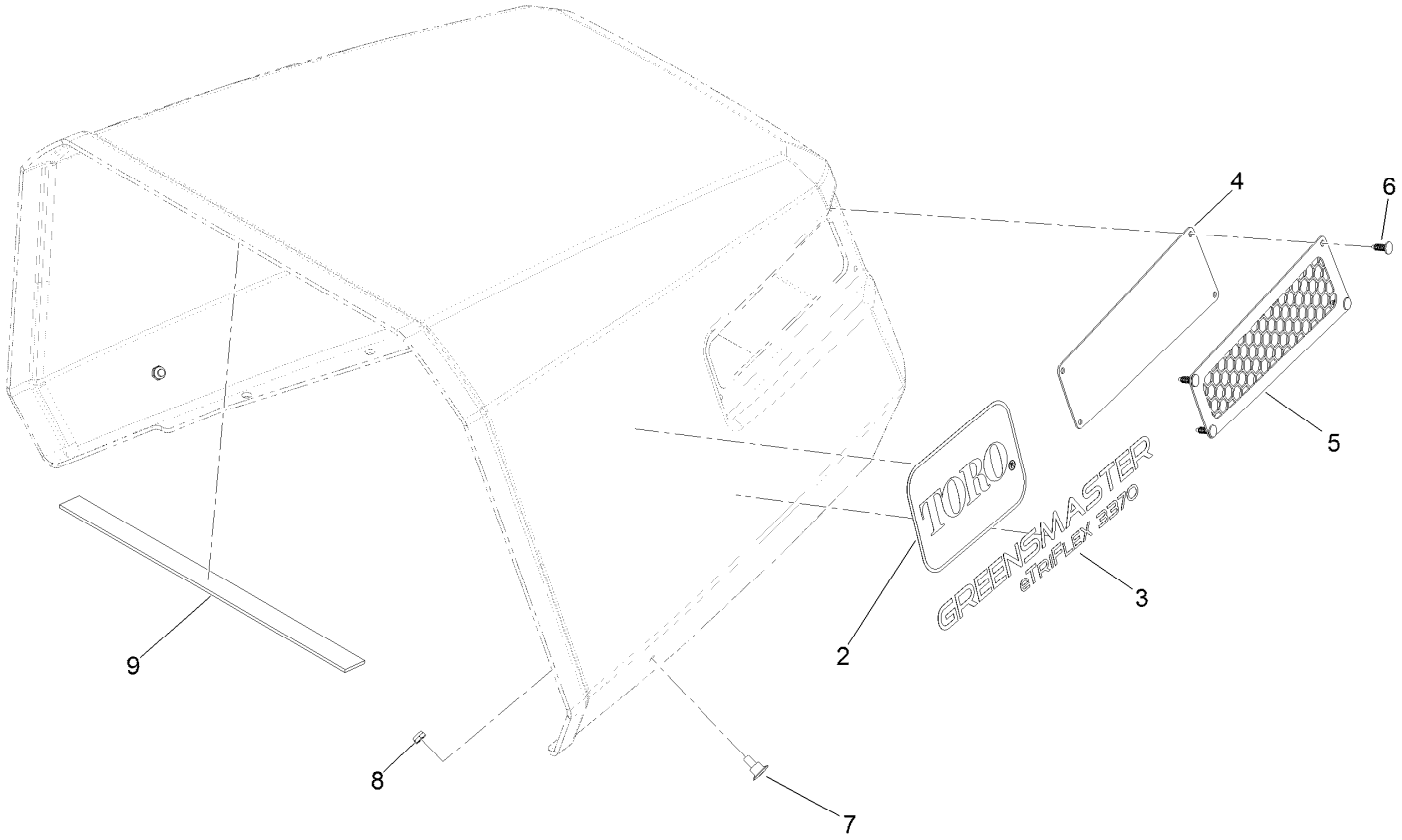

Hood Assembly No. 139-8317

Ref.	Part Number	Qty.	Description
2	62-5550	2	Decal
3	137-7928	2	Decal-Etriflex 3370
4	137-7926-03	2	Screen
5	137-7911-03	2	Screen
6	120-6737	8	Plug-Plastic
7	125-1122	2	Screw
8	3296-56	2	Nut-Lock, NI
9	137-8082	1	Strip-Foam

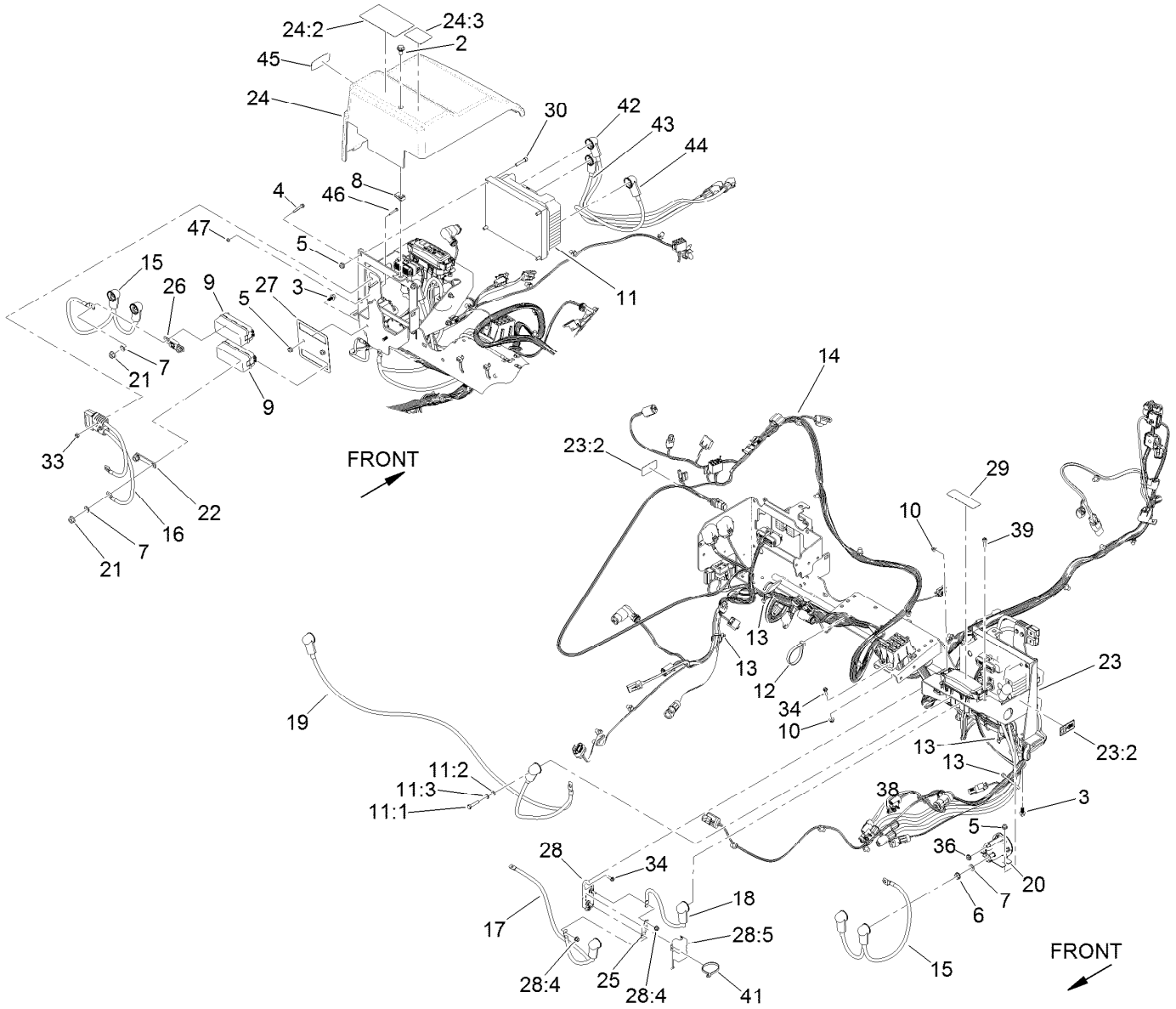

Electrical Assembly

Ref.	Part Number	Qty.	Description
2	19-1470	1	Screw-Shoulder
3	99-6810	6	Screw-HHF
4	100-4352	2	Screw-HWH
5	104-7201	10	Nut-HF, NI
6	107-0380	4	Nut-HHF
7	107-0394	8	Washer-Flat
8	112-3306	1	Nut
9	114-3318	2	Holder-Fuse, Mega
10	120-4578	6	Nut-HF
11	120-4780	1	Controller-Motor, Traction
11:1	33113-030	5	Screw-HH
11:2	33093-00	5	Washer-Flat
11:3	43-5930	5	Washer-Lock, Spring
12	3334-945	3	Tie-Cable
13	3290-379	4	Tie-Cable
14	122-1620	1	Harness-Wire
15	122-1695	1	Cable-Battery, Positive
16	122-1698	1	Cable-Battery, Pos And Neg
17	122-1108	1	Cable-Battery, Positive
18	122-1112	1	Cable-Battery, Positive
19	122-1115	1	Cable-Battery, Negative

Ref.	Part Number	Qty.	Description
20	122-1274	2	Contactor-DC, 48V
21	127-2371	4	Nut-HF
22	132-9815	1	Strap-Jumper
23	137-8196	1	Bracket-Components
23:2	137-8127	2	Decal-No Spray
24	139-8472	1	Cover-LH
24:2	139-8471	1	Decal-Charging
24:3	139-8554	1	Decal-Warning, Charger
25	137-7707	1	Fuse-60 Amp
26	139-8414	1	Fuse-175 Amp
27	137-7835	1	Bracket-Fuses
28	137-7861	1	Fuse Block ASM
28:4	120-4580	2	Nut-HF
28:5	137-7863	1	Cover-Fuse
29	137-8037	1	Decal-Fuses, Cutting Unit
30	3274-51	4	Screw-HSH
33	3296-2	2	Nut-Lock, NI
34	32105-13	6	Screw-HWH
36	32149-8	4	Nut-Keps
38	32180-103	2	Clip-Connector
39	52-6290	2	Screw-HSH

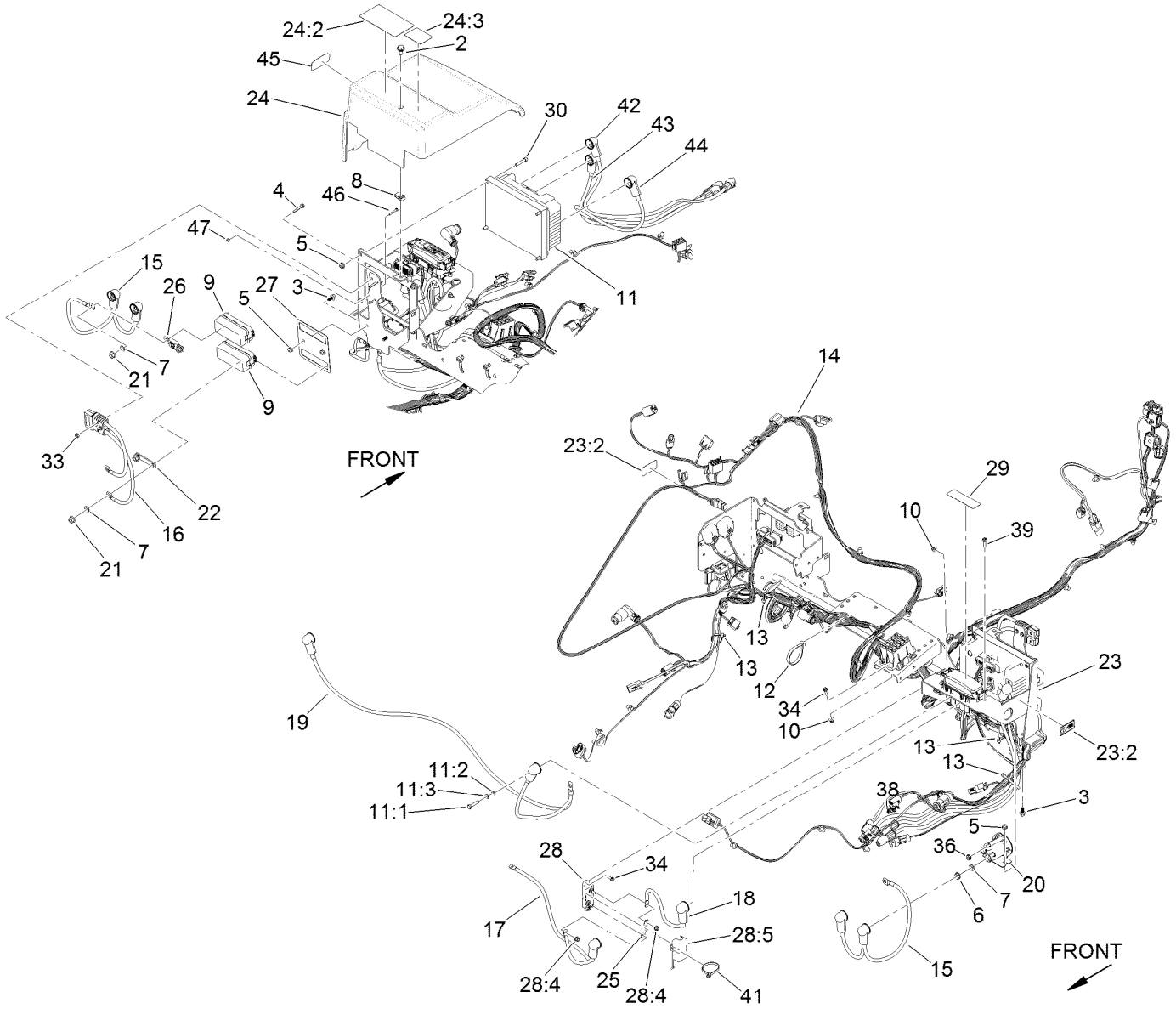

Electrical Assembly (continued)

Ref.	Part Number	Qty.	Description
41	3290-378	1	Tie-Cable
42	122-1611	1	Cable-Battery, Positive
43	122-1612	1	Cable-Battery, Positive
44	122-1613	1	Cable-Battery, Positive
45	119-7580	1	Decal-Smart, Energy
46	32105-9	2	Screw
47	120-9684	2	Nut-Lock

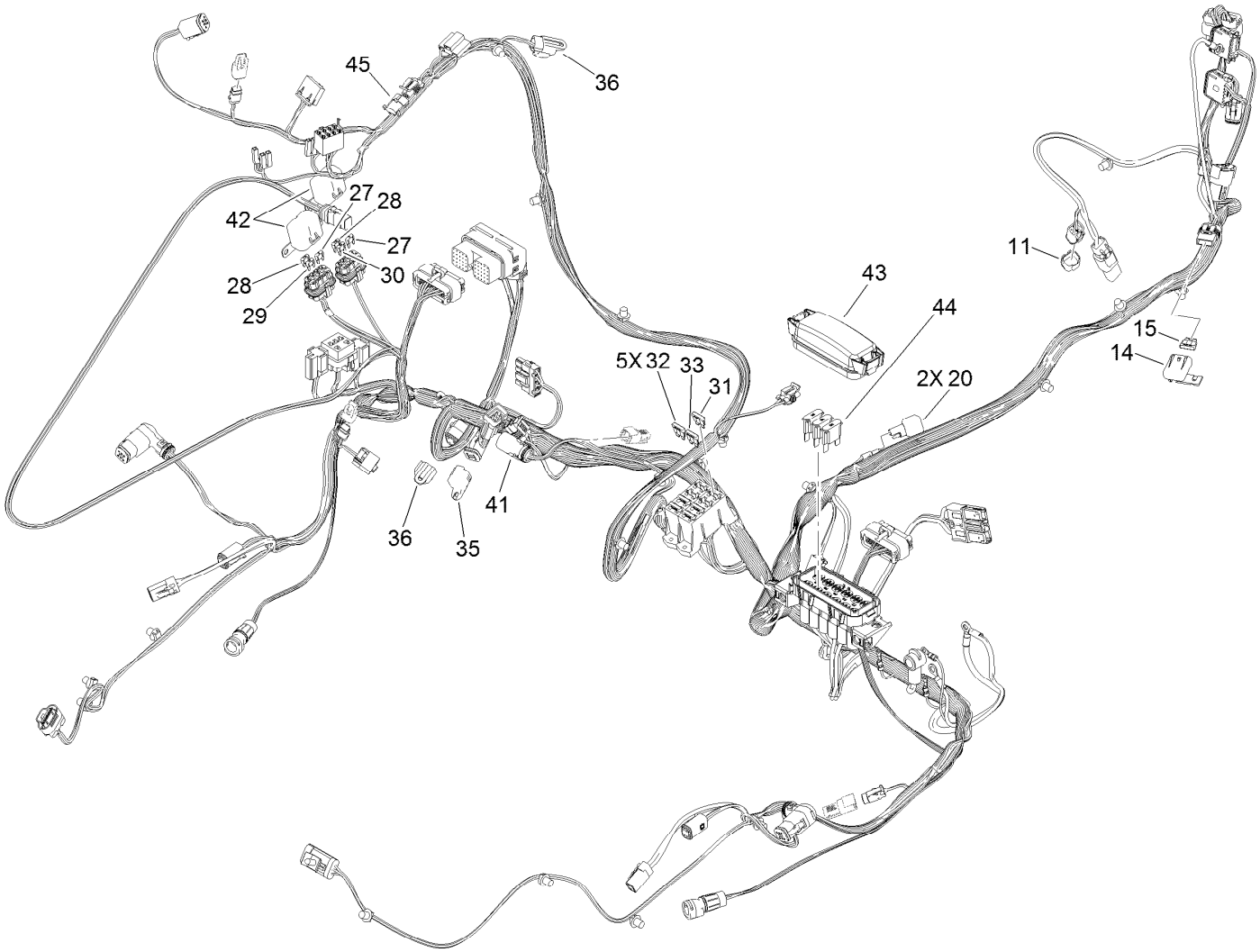

Wire Harness Assembly No. 122-1620

Ref.	Part Number	Qty.	Description
11	32180-260	1	Cap-Deutsch, Dust, 4 Way
12	32180-091	1	Cap-Dust, 2 Way ●
14	32180-019	1	Cover-Fuse, Single
15	117-4720	1	Fuse-Blade, 3A
20	100-4918	2	Diode
27	121-8861	2	Fuse-Mini Blade, 2 Amp
28	121-8865	2	Fuse-Mini Blade, 7.5 Amp
29	121-8866	1	Fuse-Mini Blade, 10 Amp
30	121-8867	1	Fuse-Mini Blade, 15 Amp
31	117-4722	1	Fuse-Blade, 5A

Ref.	Part Number	Qty.	Description
32	117-4724	5	Fuse-Blade, 10A
33	117-4728	1	Fuse-Blade, 30A
35	32180-156	1	Cap-Plug, 6 Way
36	32180-089	2	Cap-Plug, 3 Way
41	32180-090	3	Backshell-Deutsch, Dt06-06S 90 DEG
42	32180-179	2	Cover-Bussman
43	32180-146	1	Cover-Fuse
44	122-0255	3	Fuse-Maxi, 35 Amp-58V
45	32180-056	1	Cap

● Not illustrated

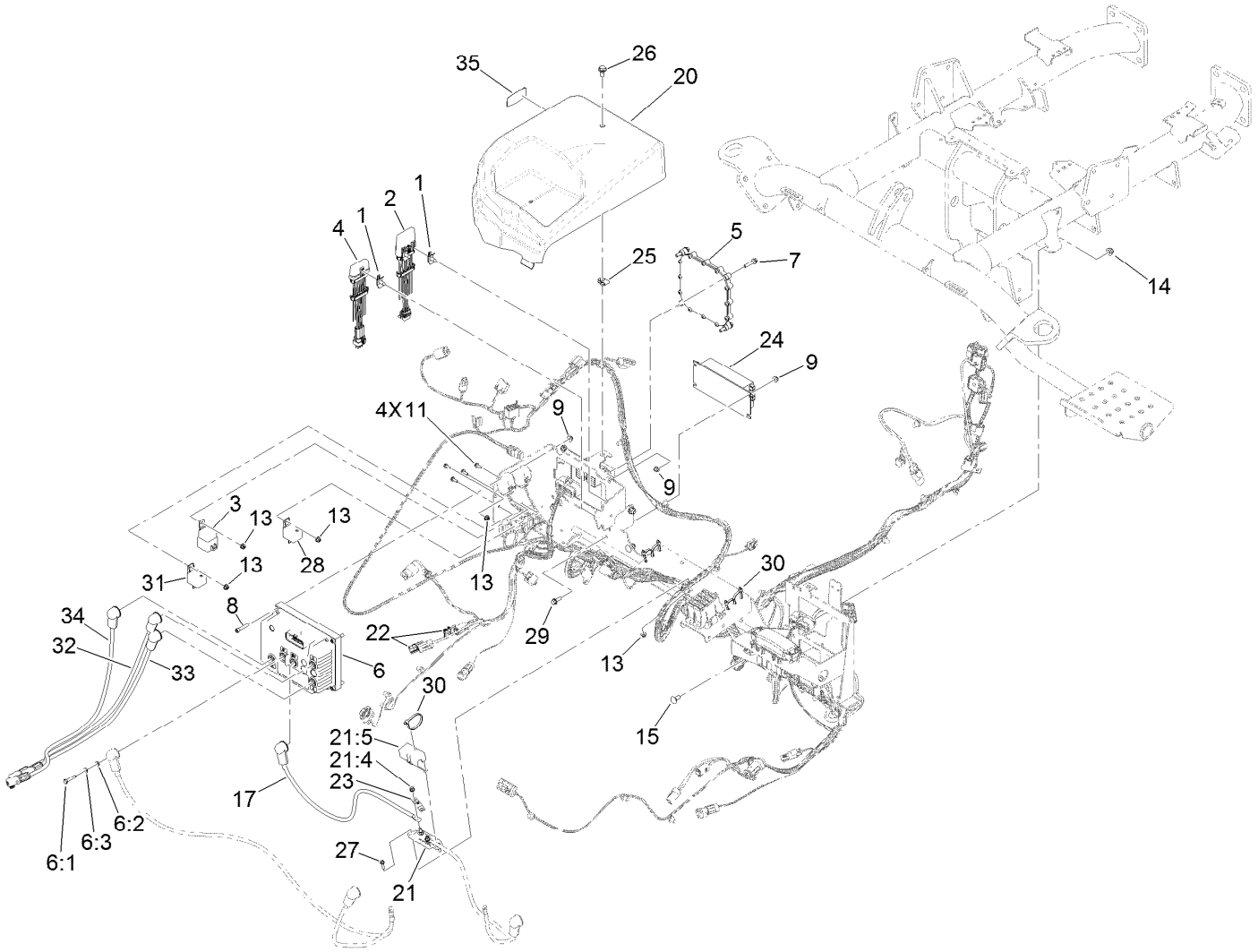

Controller Assembly

Ref.	Part Number	Qty.	Description
1	32180-011	3	Clip-Connector
2	119-4330	1	Isolated Can Module ASM
3	99-7430	1	Relay-Mini
4	112-9630	1	Module-Reel, I.D.
5	127-2770	1	Controller
6	120-4780	1	Controller-Motor, Traction
6:1	33113-030	5	Screw-HH
6:2	33093-00	5	Washer-Flat
6:3	43-5930	5	Washer-Lock, Spring
7	127-8639	4	Screw-HHF
8	3274-51	4	Screw-HSH
9	104-7201	10	Nut-HF, NI
11	32105-23	7	Screw
13	120-4578	9	Nut-HF
14	104-8300	4	Nut-HF, NI
15	3230-1	4	Bolt-CARR
17	122-1110	1	Cable-Battery, Positive
20	133-0095	1	Cover-RH

Ref.	Part Number	Qty.	Description
21	137-7861	1	Fuse Block ASM
21:4	120-4580	2	Nut-HF
21:5	137-7863	1	Cover-Fuse
22	32180-103	2	Clip-Connector
23	137-7707	1	Fuse-60 Amp
24	107-0686	1	Converter
25	112-3306	1	Nut
26	19-1470	1	Screw-Shoulder
27	32105-13	2	Screw-HWH
28	122-1487	1	Relay
29	3234-4	2	Screw-HHF
30	3290-378	3	Tie-Cable
31	122-1488	1	Relay
32	122-1614	1	Cable-Battery, Positive ASM
33	122-1615	1	Cable-Battery, Positive ASM
34	122-1616	1	Cable-Battery, Positive ASM
35	119-7580	1	Decal-Smart, Energy

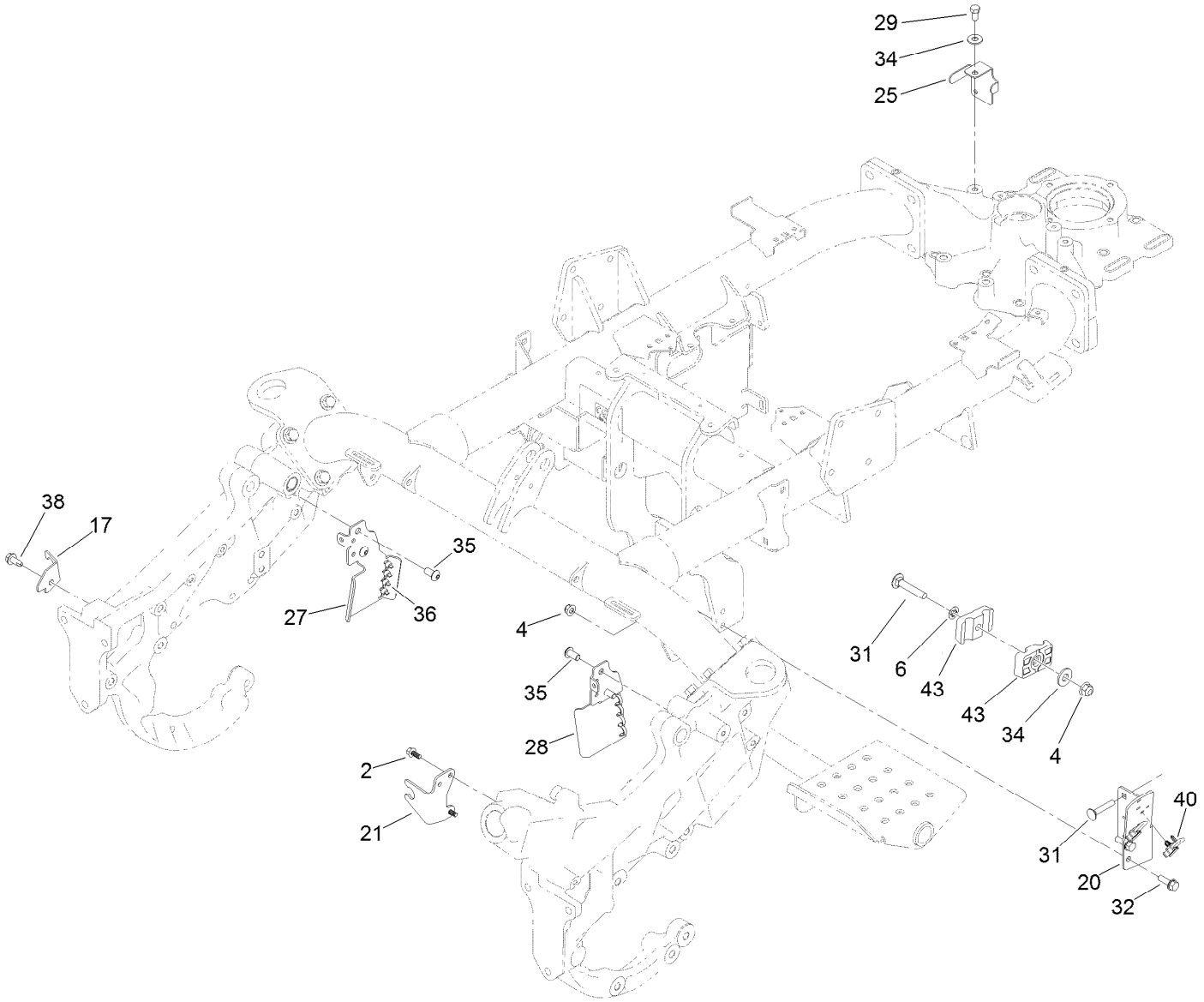

Harness Bracket Assembly

Ref.	Part Number	Qty.	Description
2	99-6810	2	Screw-HHF
4	104-8300	3	Nut-HF, NI
6	109-5667	1	Nut-Push
17	139-8409	1	Brkt-Hose
20	137-8146-03	1	Bracket-Hose, Rear
21	136-2697	1	Bracket-Hose
25	137-7859	1	Bracket-Harness
27	137-7905-01	1	Bracket-Harness, RH
28	137-7906-01	1	Bracket-Harness, LH

Ref.	Part Number	Qty.	Description
29	3210-2	1	Screw-HH
31	3230-5	1	Bolt-CARR
32	3234-29	2	Screw-HHF
34	3256-3	2	Washer-Flat
35	3274-80	4	Screw-HH
36	3290-378	8	Tie-Cable
38	32104-32	1	Screw-HWH
40	32180-103	2	Clip-Connector
43	56-7971	2	Clamp-Tube

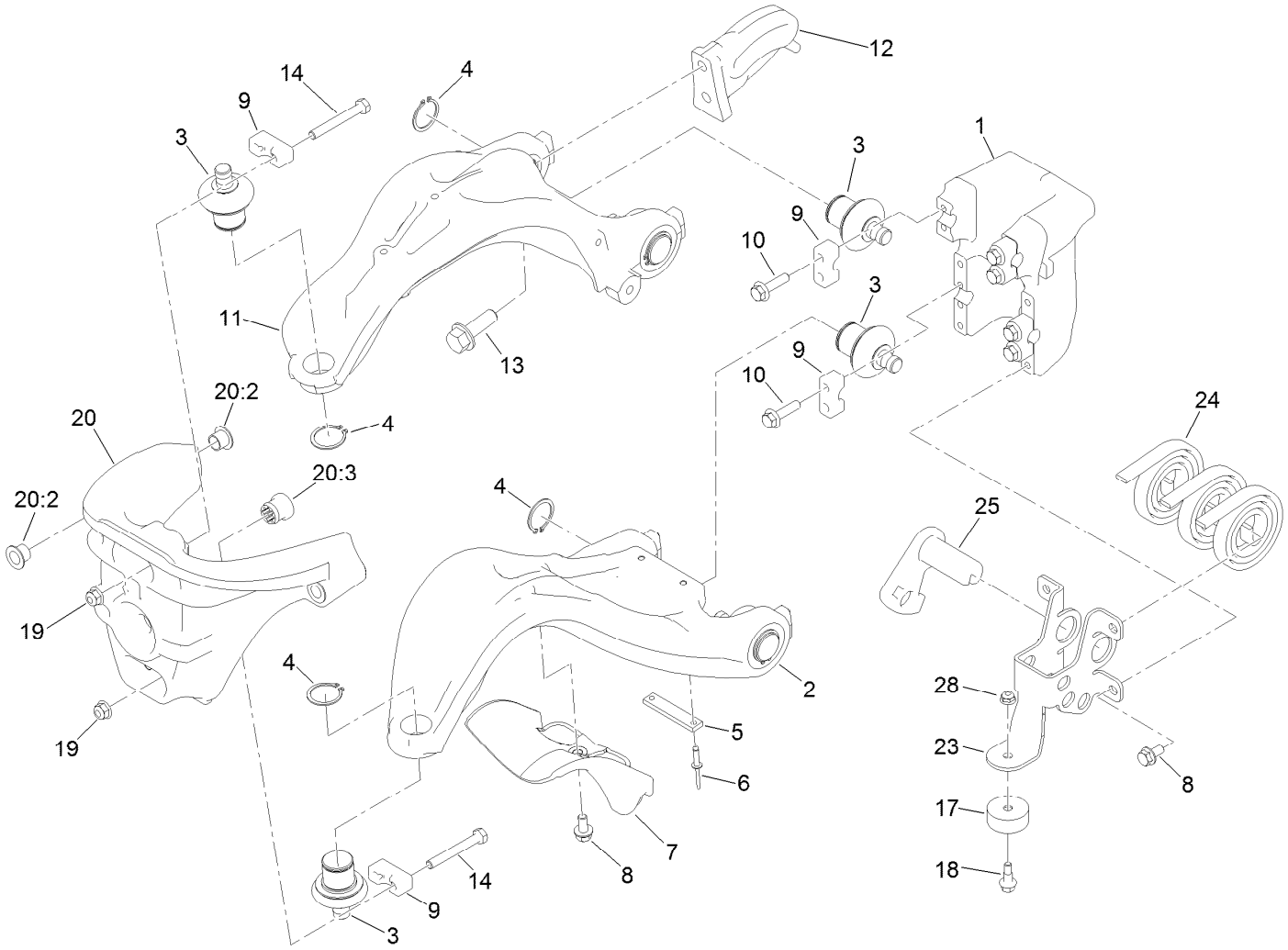

Suspension A-Arm Assembly

Ref.	Part Number	Qty.	Description
1	117-9480	1	Mount-Pivot, A-Arms
2	117-6656	1	A-Arm, Lower
3	132-6959	6	Balljoint
4	120-3225	6	Ring-Retaining, EXT
5	117-6674	1	Plate-Striker
6	3269-28	2	Rivet-Pop
7	117-6755	1	Stop-Steering
8	114-7728	5	Screw-HF
9	112-5647	6	Clamp
10	132-3837	8	Screw-HHF
11	139-6452	1	A-Arm, Upper
12	139-8407	1	Plate-Lift

Ref.	Part Number	Qty.	Description
13	100-6116	2	Screw-HHF
14	132-3838	4	Screw-HH
17	133-0308	1	Bumper-Rubber
18	133-0315	1	Screw-Shoulder, HF
19	104-8300	4	Nut-HF, NI
20	120-3216	1	Steering Head ASM
20:2	125-5239	4	Bushing-Flange
20:3	131-1836	1	Grommet
23	140-5232	1	C-Balance Mount
24	114-9306	3	Spring
25	140-5234	1	Tensioner
28	104-7201	1	Nut-HF, NI

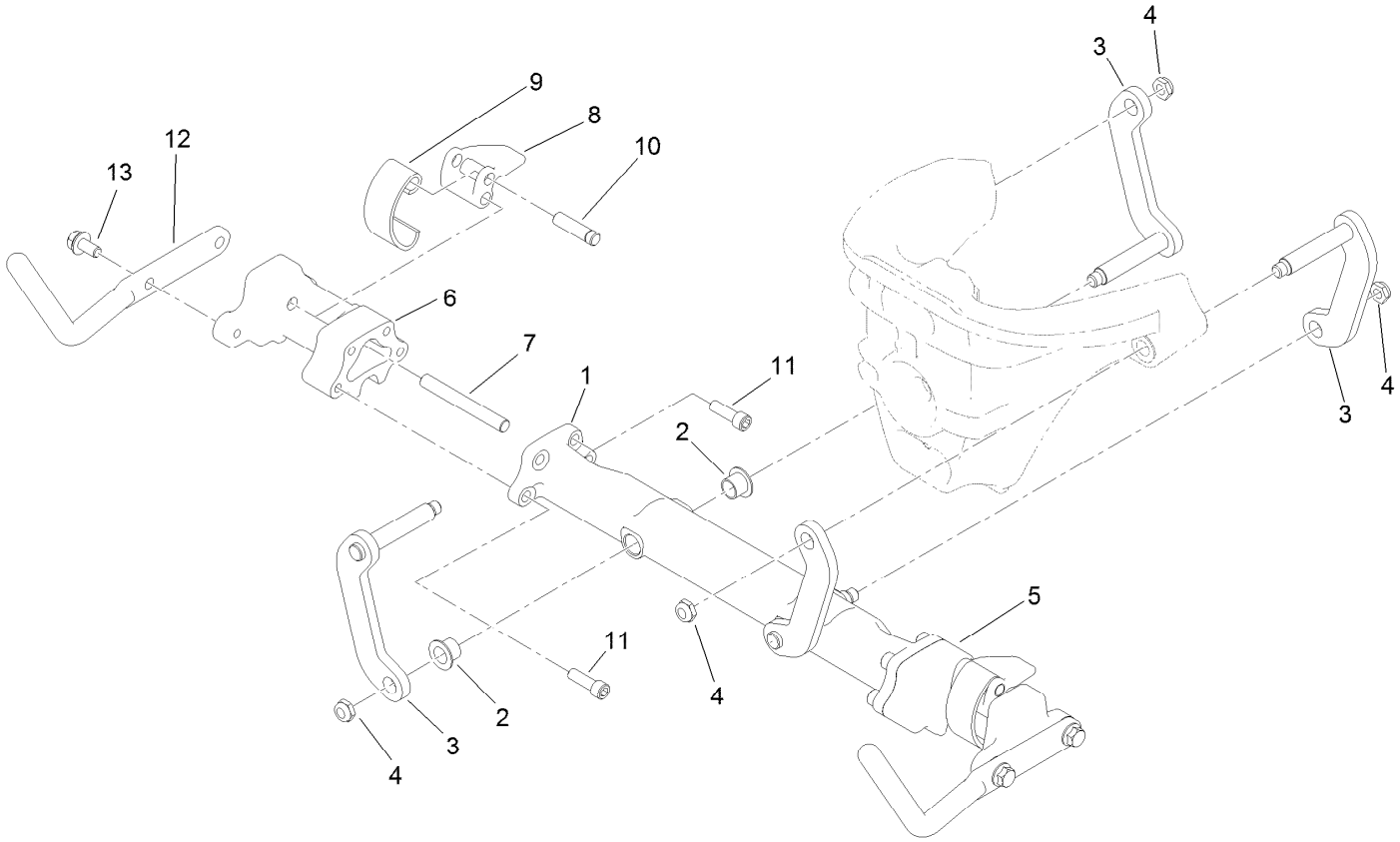

Suspension Crossarm Assembly

Ref.	*Part Number*	*Qty.*	*Description*
1	120-3217	1	Crossarm
2	125-5239	4	Bushing-Flange
3	117-6654	4	Link
4	3296-59	4	Nut-Lock, NI
5	117-9482	1	Mount-Cross Arm, LH
6	117-9492	1	Mount-Cross Arm, RH
7	114-8051	2	Pin-Pivot
8	114-8047	2	Lever
9	114-8048	2	Spring
10	114-8049	2	Pin-Pivot
11	120-3227	8	Screw-HSH
12	120-2784-01	2	Horn-Basket
13	114-7728	4	Screw-HF

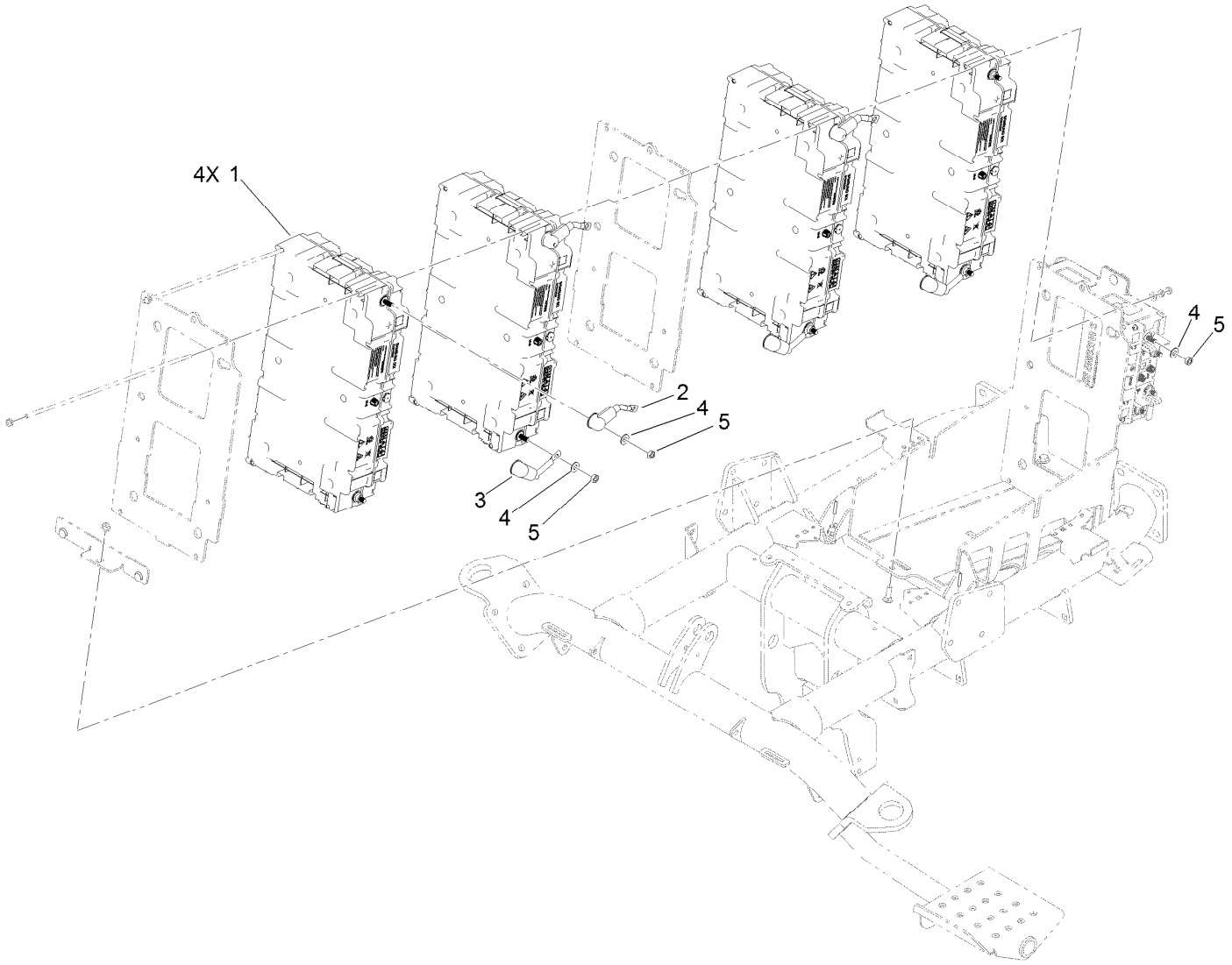

Top Battery Installation Assembly

Ref.	*Part Number*	*Qty.*	*Description*
1	04070	4	Battery
2	122-1696	3	Cable-Battery, Positive
3	122-1697	3	Cable-Battery, Negative
4	107-0279	12	Washer
5	137-8088	12	Nut-Hex

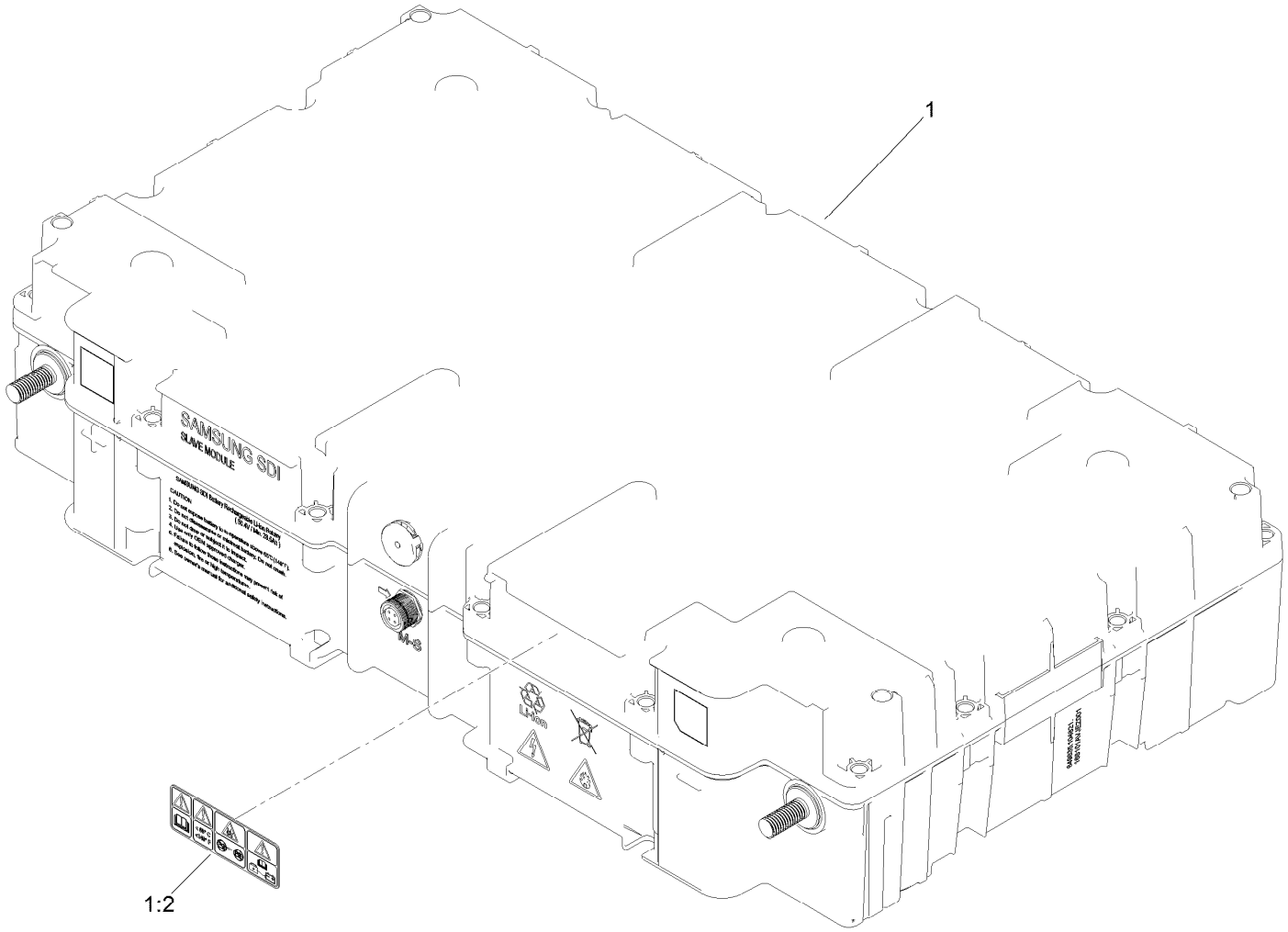

Battery Assembly No. 04070

Ref.	Part Number	Qty.	Description
1		1	Battery Service ASM ●
1:2	137-9712	1	Decal-Safety

● Not serviced separately

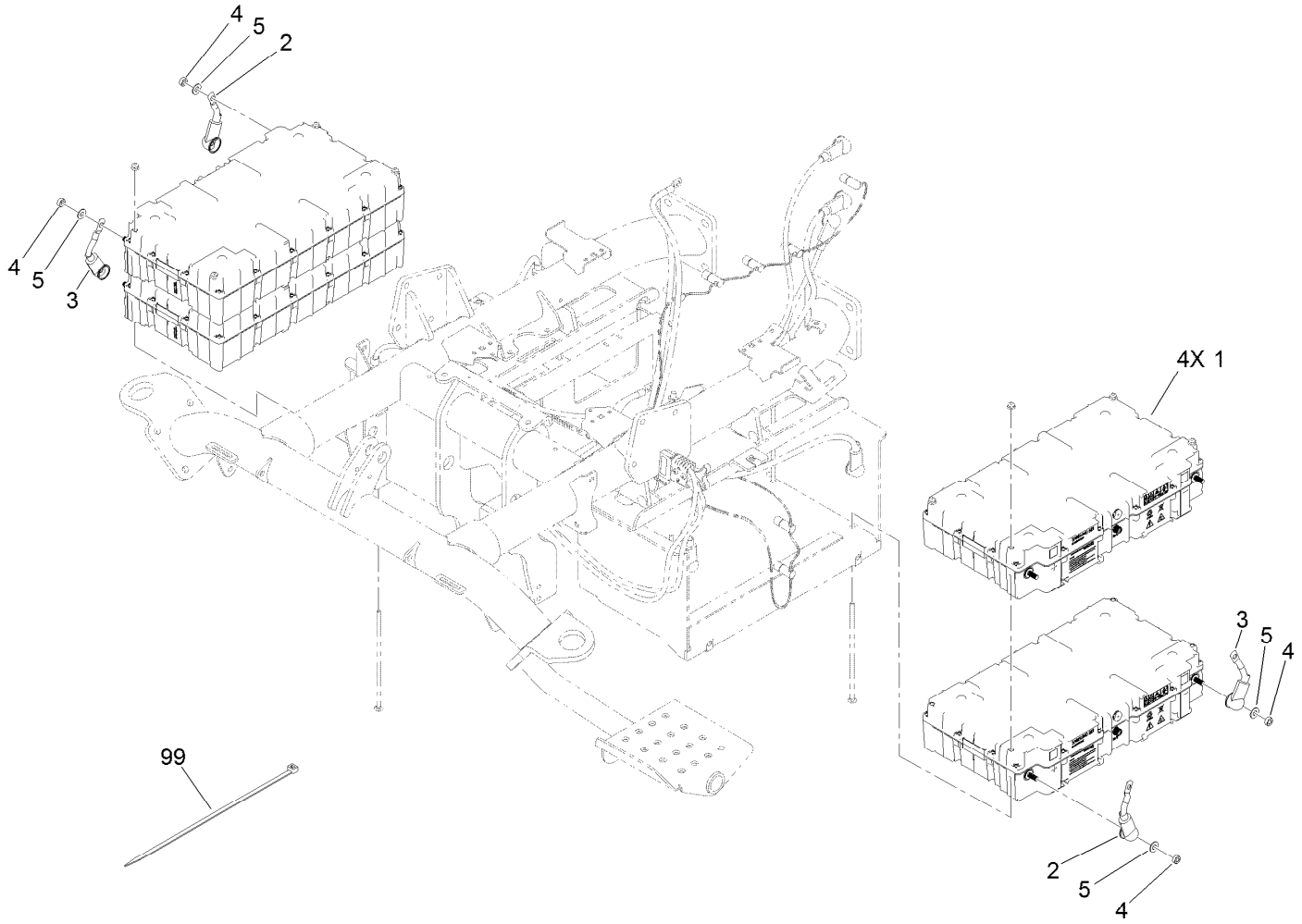

Side Battery Installation Assembly

Ref.	*Part Number*	*Qty.*	*Description*
1	04070	4	Battery
2	122-1696	2	Cable-Battery, Positive
3	122-1697	2	Cable-Battery, Negative
4	137-8088	8	Nut-Hex
5	107-0279	8	Washer
99	1-809066	2	Cable Tie-Plastic

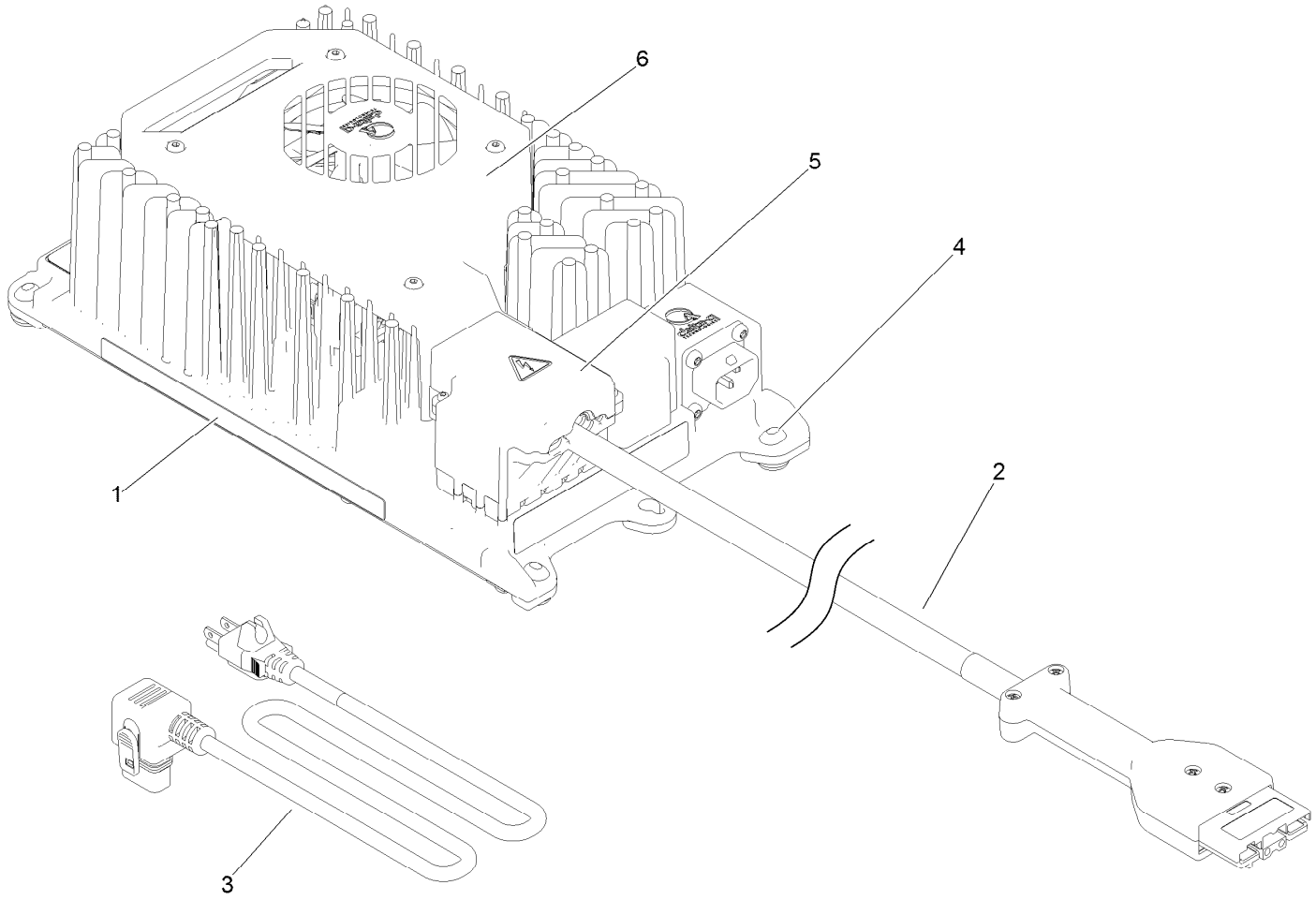

1200 Watt Lithium Battery Charger Assembly

Ref.	Part Number	Qty.	Description
1	137-9713	1	Decal-Charger
2	137-9715	1	Cord-DC W/Can Bus
3	107-0382	1	Powercord-AC, Europe ●■
3	107-0383	1	Powercord-AC, U.K. ●■
3	137-7983	1	Cord-AC, 120V
4	137-7984	1	Handle And Feet Kit
5	137-7985	1	Cover-Plastic, DC Power
6	139-8423	1	Fan-Service

● Not illustrated

■ Optional Equipment

Attachments and Accessories

For 04590 Greensmaster eTriFlex 3370 Traction Unit

Product Name	Model/Part
1200 Watt LI-ION Battery Charger	04012
Turf Evaluator	04399
Light Kit	04500
3WD Kit, Electric Triflex	04503
Standard Greensmower Seat Kit	04508
8-Blade DPA Reel Mower	04651
11-Blade DPA Reel Mower	04653
14-Blade DPA Reel Mower	04655
Anti-Bobbing Kit	04716
Tri-Roller	04722
Spiker	04723
Premium Seat	04729
Powercord-AC, Europe	107-0382
Powercord-AC, U.K.	107-0383
Wireless Hourmeter	115-4754
Premium Armrest Kit	119-7105
Weight Kit	119-7129
Armrest Kit	121-3660
Rear Light Kit	137-7945
Front Light Mount Kit	137-7947
Bag Kit	137-8130
Bimini Shade Kit	138-8579
Kit-Fuses	139-8482
Height-of-Cut Bar	94-9010
Tire-TURFMATE	99-4506

Notes:

TORO®

Count on it.