Form No. 3433-426 Rev G

TORO®

Count on it.

Parts Catalog

Greensmaster® 3360 eTriFlex

Traction Unit

Model No. 04580—Serial No. 405000001 and Up

Register at www.Toro.com.
Original Instructions (EN)

3433-426 G

Ordering Replacement Parts

To order replacement parts, please supply the part number, the quantity, and the description of each part desired.

Understanding Reference Numbers

Each identified part in an illustration has a reference number. The reference number for a part also appears in the parts list, along with other information about the part.

This catalog uses two special reference number formats, one to indicate parts in a service assembly and another to indicate the quantity of a given part in an illustration.

Service Assembly Reference Numbers

Parts in service assemblies have reference numbers in the form a:b. The a represents the reference number of the entire service assembly and the b represents a sequential number unique to each part within the service assembly.

For example, a wheel assembly might be identified by reference number 6, the tire by 6:1, the valve by 6:2, and the wheel by 6:3. When you order the assembly identified by reference number 6, you receive all parts identified by reference numbers 6:1,6:2, and 6:3. However, you may also order any part individually. Reference numbers of this type appear in illustration and in parts lists.

Reference Numbers Indicating Quantity

In an illustration, if a reference number indicates more than one part, the reference number has the form nX y. The n represents the quantity of the part, the X is the multiplication symbol, and the y represents the reference number.

For example, in an illustration, the reference number 2X 37 means that two of the parts identified by reference number 37 are indicated.

Contents

Frame Assembly 4
ROPS Assembly 5
Platform Assembly 6
Forward and Reverse Pedal Assembly 7
Brake Pedal Assembly 8
Brake Actuator Assembly 9
Brake Rod Assembly No. 137-2185 10
Steering Assembly 11
Wheel and Tire Assembly 12
Wheel Spindle Assembly No. 119-4490 13
Console Assembly 14
Joystick Bracket Assembly No. 106-4167 15
Seat Plate Assembly 16
Engine Assembly 17
Generator/Controller Assembly No. 127-2580 19
Generator Assembly No. 127-2579 20
Generator Service Assembly No. 127-2578 21
Traction Assembly 22
RH Wheel Motor Assembly No. 127-1525 23
Gearbox Assembly No. 127-1529 24
LH Wheel Motor Assembly No. 127-1527 25
Lift Assembly 26
Suspension, Reel Motor and Basket Assembly 27
Electric Reel Motor Assembly No. 138-8905 28
Electric Motor Assembly 29
Basket Assembly No. 132-9599 30
Suspension Pin Position Assembly 31
Fuel Tank and Hood Assembly 32
Hood Assembly No. 139-8316 33
Electrical Assembly 34
Wire Harness Assembly No. 122-1619 36
Controller Assembly 37
Battery Assembly 38
Suspension A-Arm Assembly 39
Suspension Crossarm Assembly 40
Attachments and Accessories 41

© 2021—The Toro® Company
8111 Lyndale Avenue South
Bloomington, MN 55420

Contact us at www.Toro.com.
Printed in the USA.
All Rights Reserved

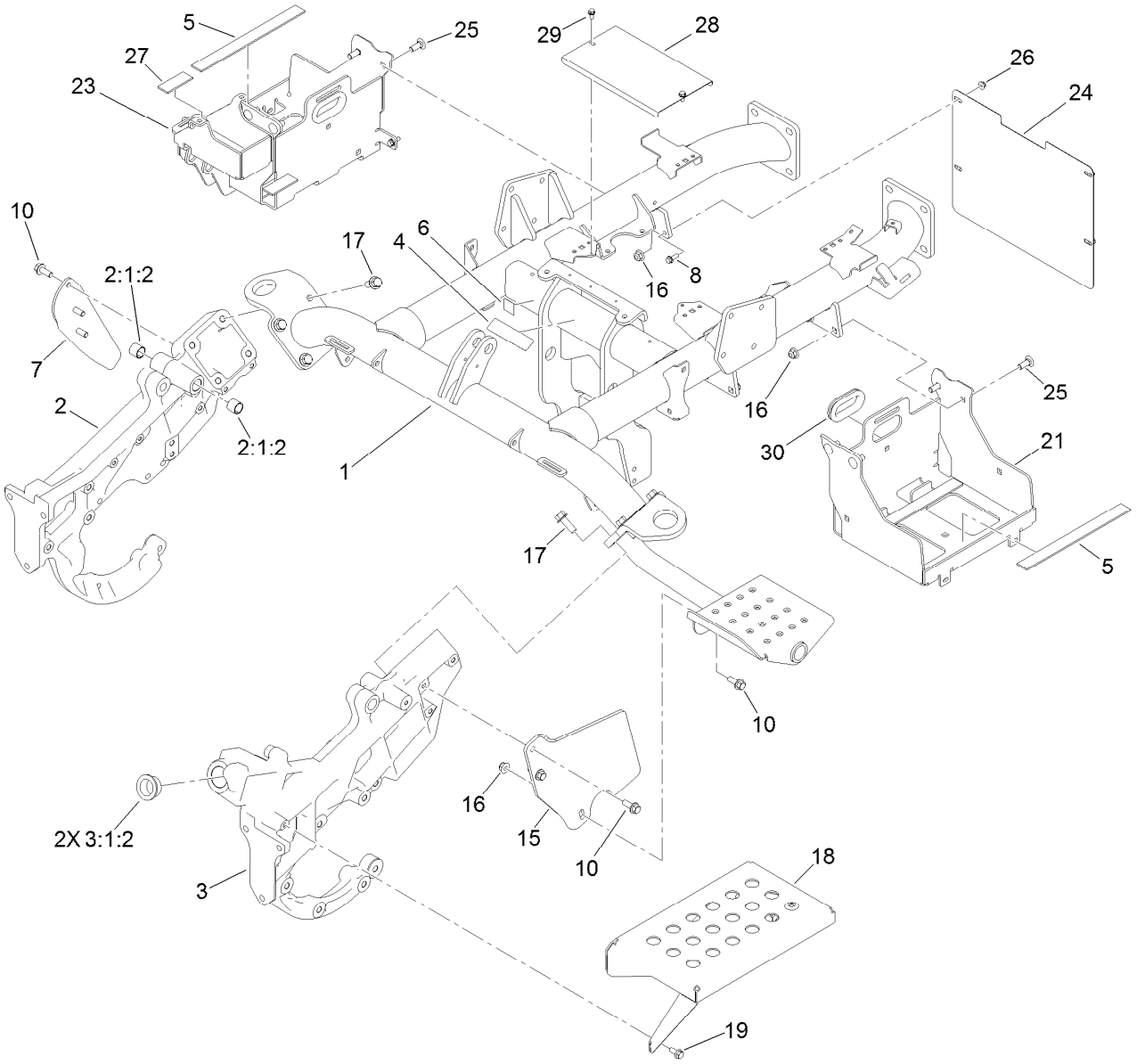

Frame Assembly

Ref.	Part Number	Qty.	Description
1	137-8045-SP	1	Frame
2	139-8318	1	Side Casting, RH
2:1:2	94-9609	2	Bushing-Straight
3	139-8319	1	Side Casting, LH
3:1:2	60-0080	2	Bushing
4	133-8062	1	Decal-Arrestor, Spark
5	133-5782	4	Strip-Foam
6	93-7252	1	Decal
7	133-0062-01	1	Bracket-Jack
8	115-5103	4	Screw-HHF
10	3234-42	6	Screw-HHF
15	133-0004-01	1	Bracket-Step
16	104-8301	9	Nut-HF, NI

Ref.	Part Number	Qty.	Description
17	117-9035	8	Screw-HHF
18	132-9994-01	1	Step
19	3234-47	4	Screw-HHF
21	137-7972-01	1	Tray-Battery
23	137-7797-01	1	Tray-Battery, RH
24	137-7799-01	1	Shield-Heat
25	3231-22	8	Screw-CARR
26	104-7201	4	Nut-HF, NI
27	133-0081	2	Strip-Foam
28	137-7881-03	1	Cover-Pulley
29	32144-4	2	Screw-HWH
30	240-12	2	Grommet-Rubber

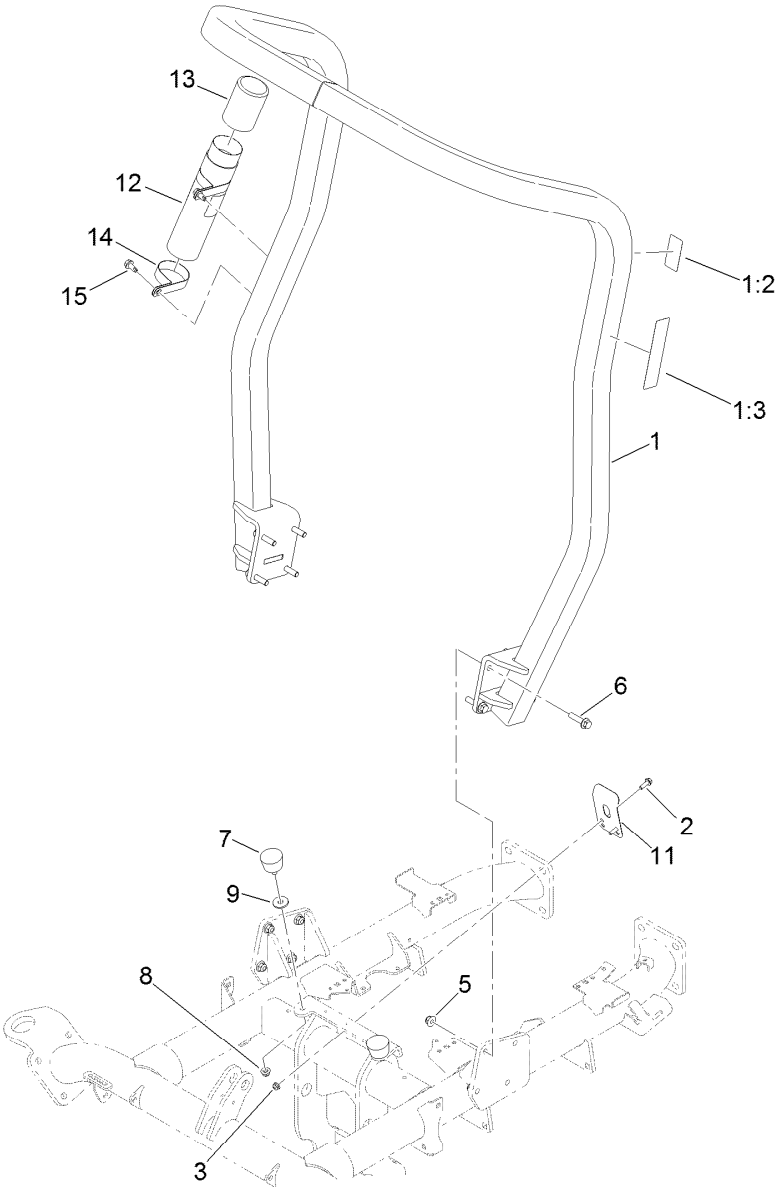

ROPS Assembly

Ref.	Part Number	Qty.	Description
1	137-8095	1	ROPS ASM
1:2	115-8199	1	Decal-ROPS
1:3	115-8226	1	Decal-ROPS
2	115-5103	2	Screw-HHF
3	104-7201	2	Nut-HF, NI
5	104-8301	8	Nut-HF, NI
6	137-7951	8	Screw-HHF
7	68-3270	2	Bumper-Rubber
8	104-8300	2	Nut-HF, NI
9	52-2861	2	Washer
11	66-2630	1	Latch-Seat
12	104-7050	1	Tube-Manual
13	104-7048	1	Cap-Housing
14	2412-133	2	Clamp-R
15	32104-32	2	Screw-HWH

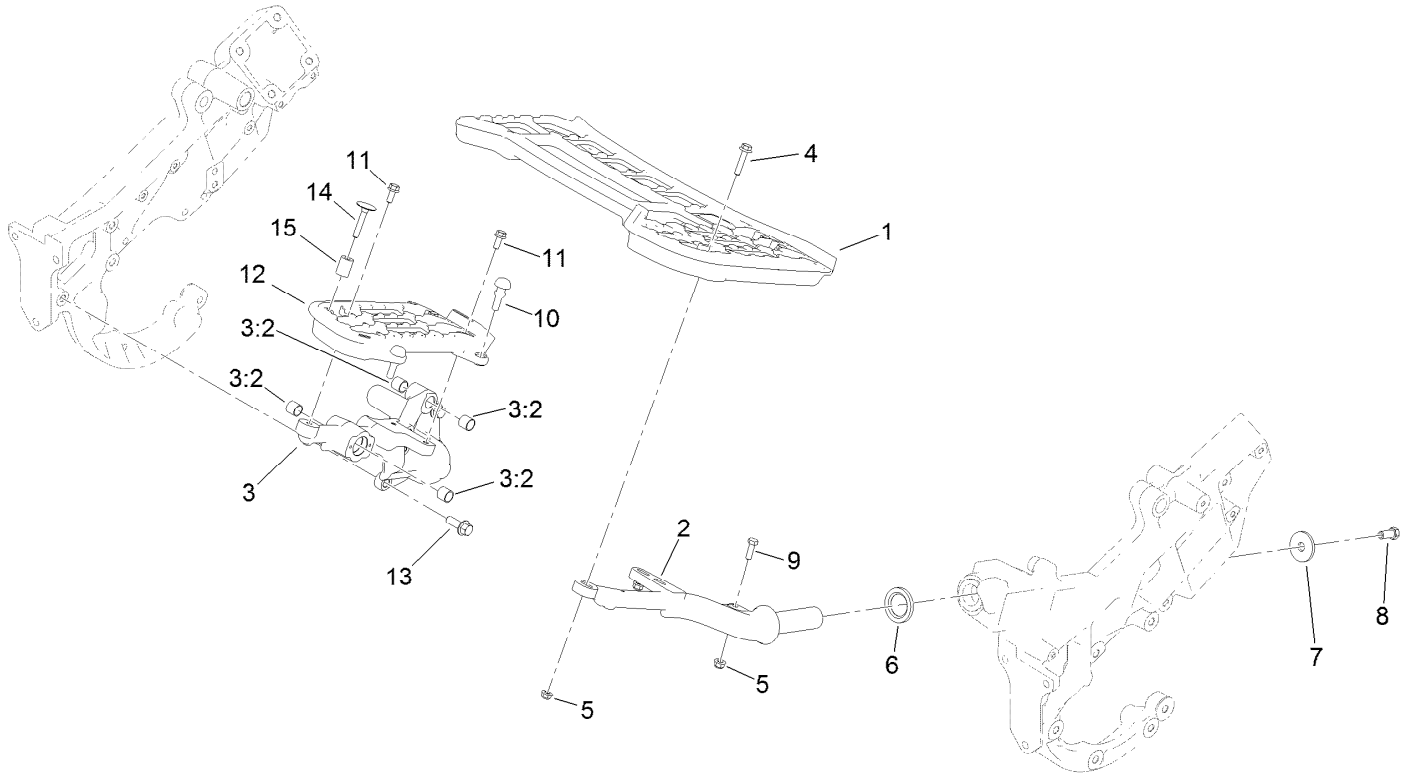

Platform Assembly

Ref.	Part Number	Qty.	Description
1	137-7768	1	Platform-LH
2	117-9006-01	1	Support-Platform, LH
3	132-9895	1	Support-Platform, RH
3:2	256-311	4	Bushing-Split
4	115-1794	3	Screw-HHF
5	104-8300	4	Nut-HF, NI
6	94-8946	1	Washer-Thrust
7	84-1560	1	Washer-Thrust

Ref.	Part Number	Qty.	Description
8	324-4	1	Screw-HH
9	322-5	1	Screw-HH
10	117-9072	2	Bumper-Rubber
11	3234-47	3	Screw-HHF
12	117-9008	1	Platform-RH
13	117-9035	3	Screw-HHF
14	115-8240	1	Screw-Elevator
15	119-0718	1	Spacer

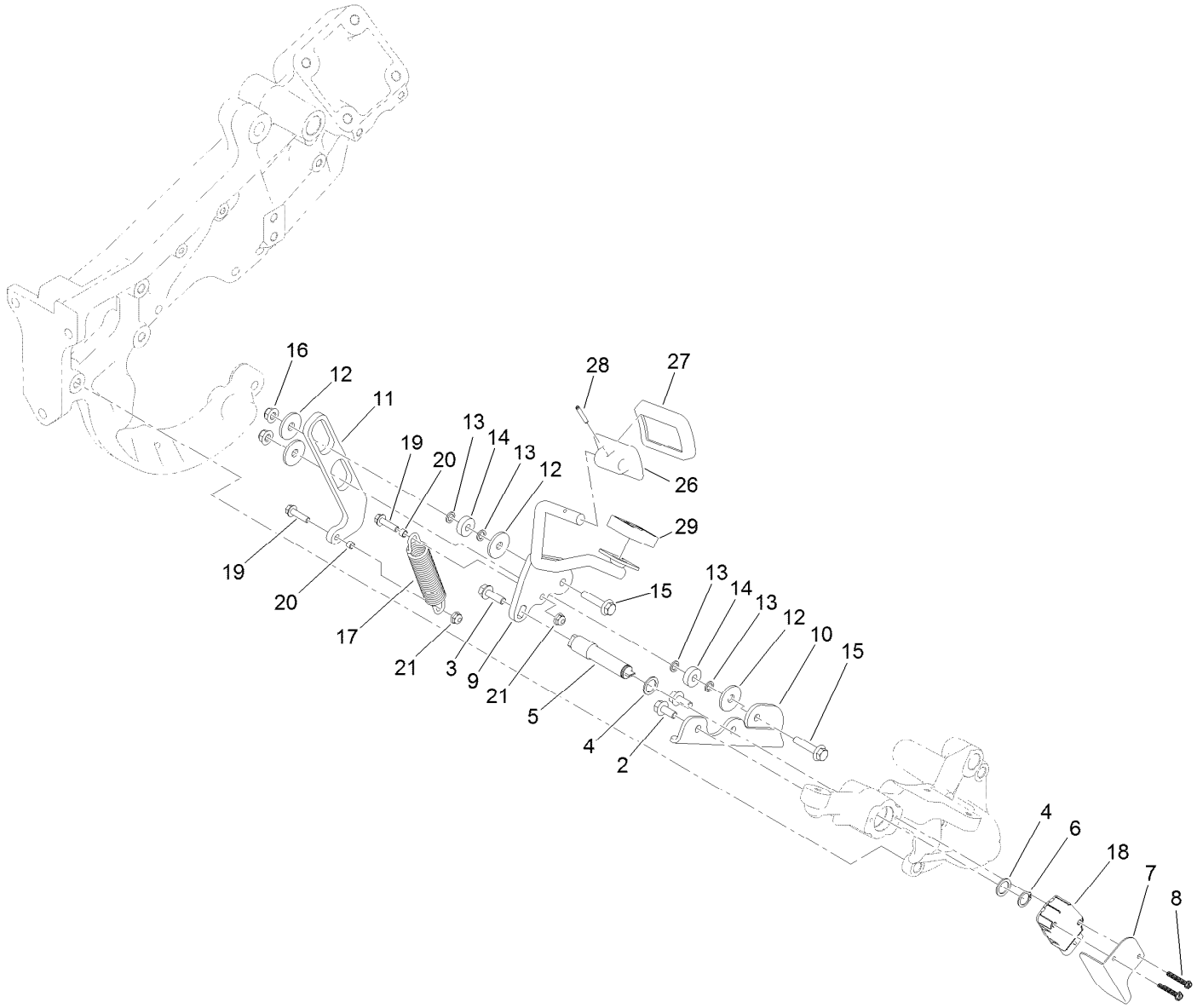

Forward and Reverse Pedal Assembly

Ref.	Part Number	Qty.	Description
2	98-9940	2	Screw-HHF
3	115-5142	1	Screw-HHF
4	7-3590	2	Washer
5	132-9852	1	Shaft-Pedal
6	32151-62	1	Ring-Retaining
7	121-7035	1	Shield-Sensor
8	692501	2	Screw-SHWH
9	137-7814-01	1	Rod-Traction
10	137-7811-01	1	Bracket-Control, Motion
11	139-8405	1	Link-Connecting
12	107675	4	Washer
13	75-5470	4	Spacer-Bearing

Ref.	Part Number	Qty.	Description
14	251-259	2	Bearing-Ball
15	115-1794	2	Screw-HHF
16	104-8300	2	Nut-HF, NI
17	137-7944	1	Spring-Extension
18	122-0917	1	Sensor-Position
19	120-4654	2	Screw-HHF
20	121-2015	2	Spacer
21	104-7201	2	Nut-HF, NI
26	117-9507	1	Pedal-Accelerator
27	74-9100	1	Pad-Pedal, Forward
28	32121-45	1	Pin-Spring
29	74-9110	1	Pad-Pedal, Reverse

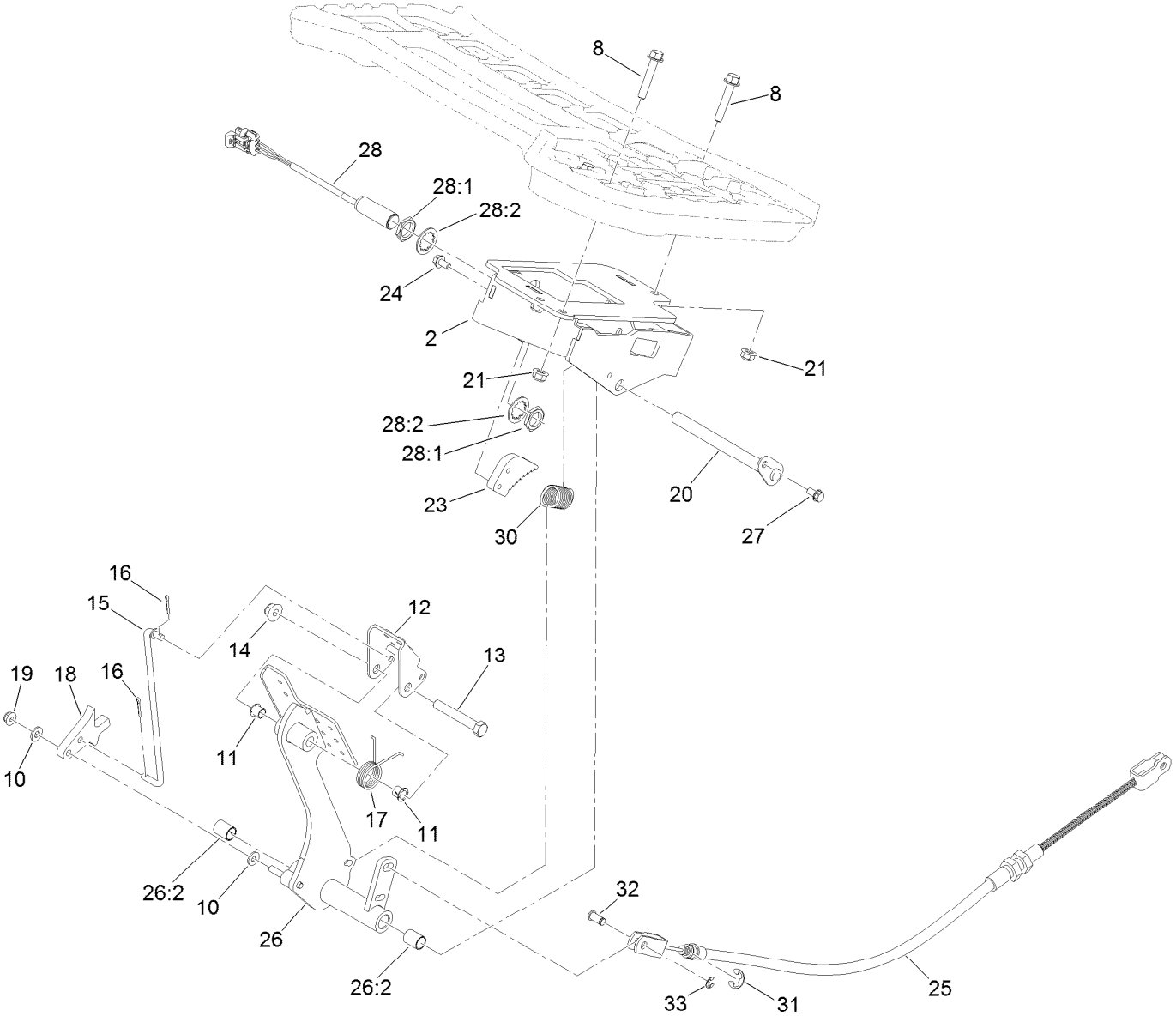

Brake Pedal Assembly

Ref.	Part Number	Qty.	Description
2	132-9890-03	1	Support-Pedal
8	94-5780	3	Screw-HWH
10	3256-22	2	Washer-Flat
11	52-2891	2	Bushing-Flanged, Nylon
12	99-7963-03	1	Pedal-Park
13	323-12	1	Screw-HH
14	104-8301	1	Nut-HF, NI
15	115-0129	1	Rod-Pawl, Brake
16	3272-6	2	Pin-Cotter
17	99-7140	1	Spring-Torsion
18	117-0238	1	Detent
19	104-7201	1	Nut-HF, NI
20	133-0089	1	Pivot-Pedals
21	104-8300	3	Nut-HF, NI

Ref.	Part Number	Qty.	Description
23	99-7214	1	Pawl-Brake
24	119-1065	2	Screw-HWH
25	137-7770	1	Cable-Brake
26	137-8109	1	Brake Pedal ASM
26:2	133-0090	2	Bushing-Split
27	32144-4	1	Screw-HWH
28	115-5300	1	Proximity Switch ASM
28:1	117-3207	2	Nut-Hex
28:2	117-3208	2	Washer-Lock, Internal Tooth
30	136-7316	1	Spring-Extension
31	32120-47	1	Ring-Retaining, External
32	109-6887	1	Pin-Clevis
33	701197	1	E-Ring

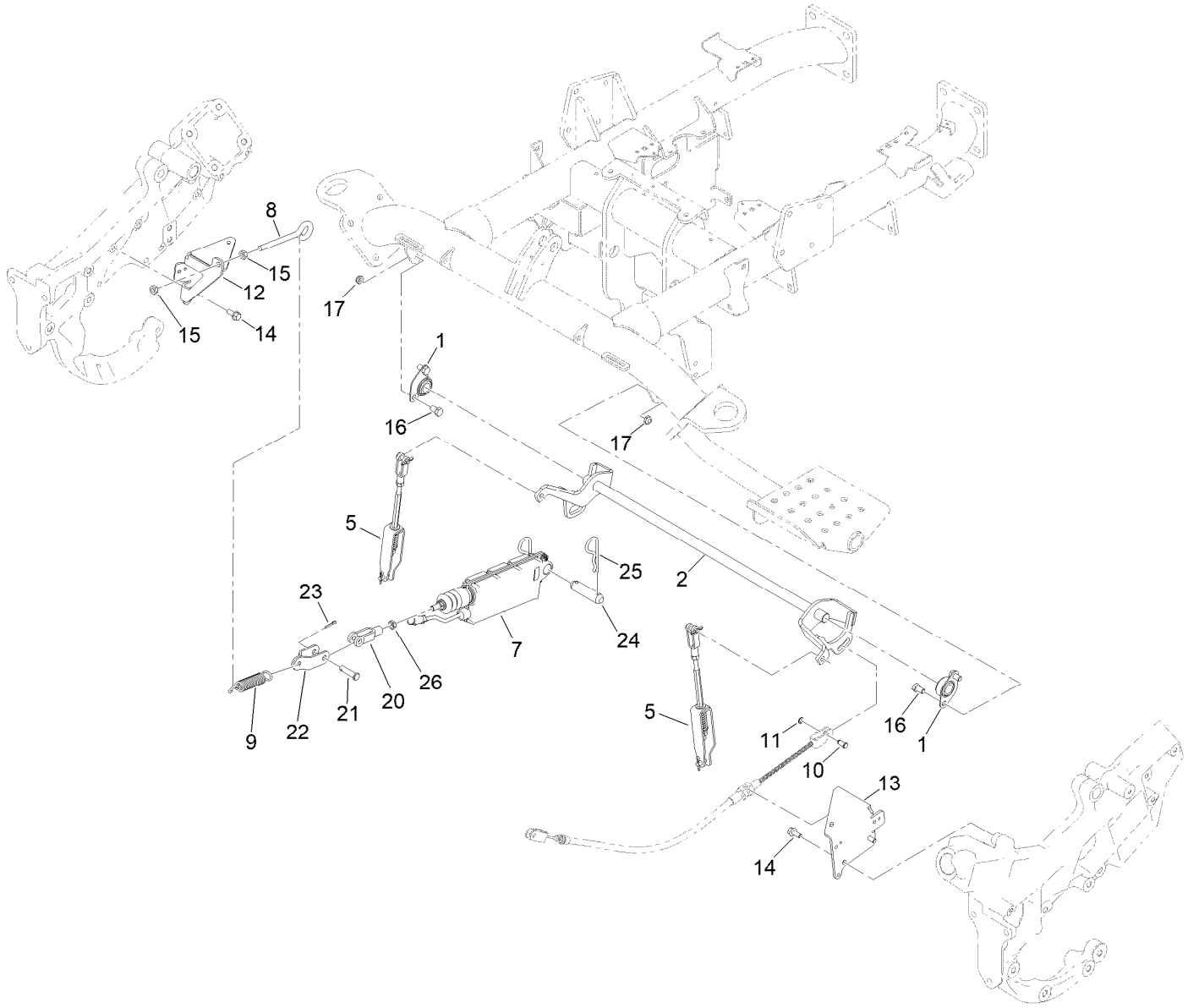

Brake Actuator Assembly

Ref.	Part Number	Qty.	Description
1	1-633102	2	Bearing-Flange, Side
2	145-0060-03	1	Cross Shaft-Brake
5	137-2185	2	Brake Rod ASM
7	137-2160	1	Actuator-Brake
8	137-8026	1	Bolt-Eye
9	93-5985	1	Spring-Extension
10	109-6887	1	Pin-Clevis
11	701197	1	E-Ring
12	137-7790-03	1	Bracket-Spring
13	137-7769-03	1	Bracket-Cable
14	98-9940	4	Screw-HHF

Ref.	Part Number	Qty.	Description
15	3217-7	2	Nut-Hex
16	323-34	4	Screw-HH
17	3296-59	4	Nut-Lock, NI
20	1-633131	1	Yoke-Linkage, Brake
21	283-10	1	Pin-Clevis
22	137-7838	1	Link ASM
23	3272-10	1	Pin-Cotter
24	27-4240	1	Pin-Cylinder
25	3290-256	2	Pin-Hair
26	3220-3	1	Nut-HJ

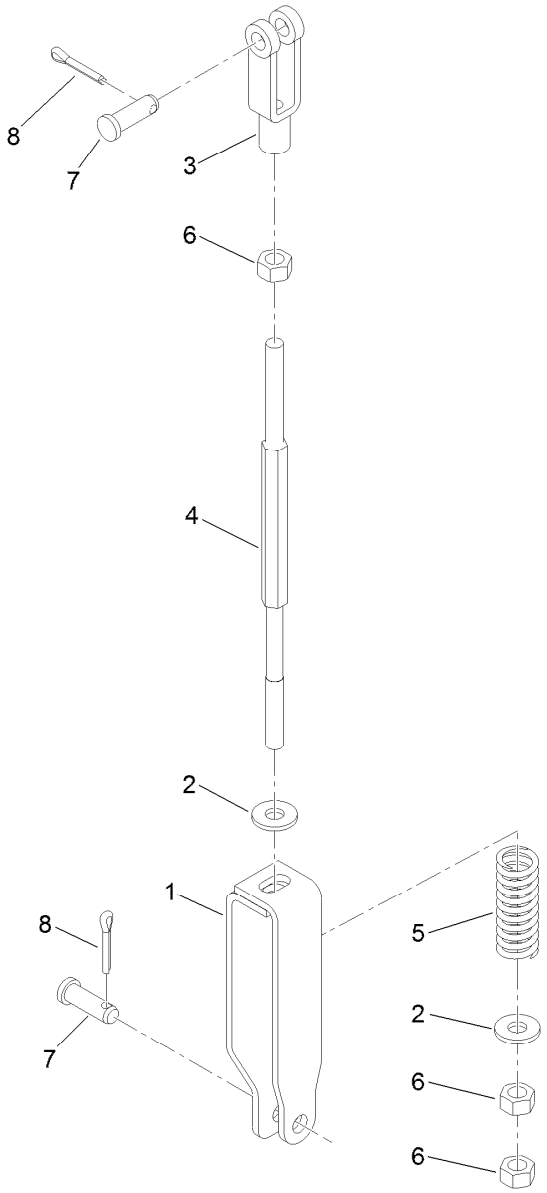

Brake Rod Assembly No. 137-2185

Ref.	*Part Number*	*Qty.*	*Description*
1	137-2180	1	Brake Clevis ASM
2	120-9646	2	Washer-Flat
3	282-2	1	Yoke
4	137-8056	1	Rod-Brake
5	137-8085	1	Spring-Seat, Compression
6	3219-2	3	Nut-Hex
7	283-1	2	Pin-Clevis
8	3272-10	2	Pin-Cotter

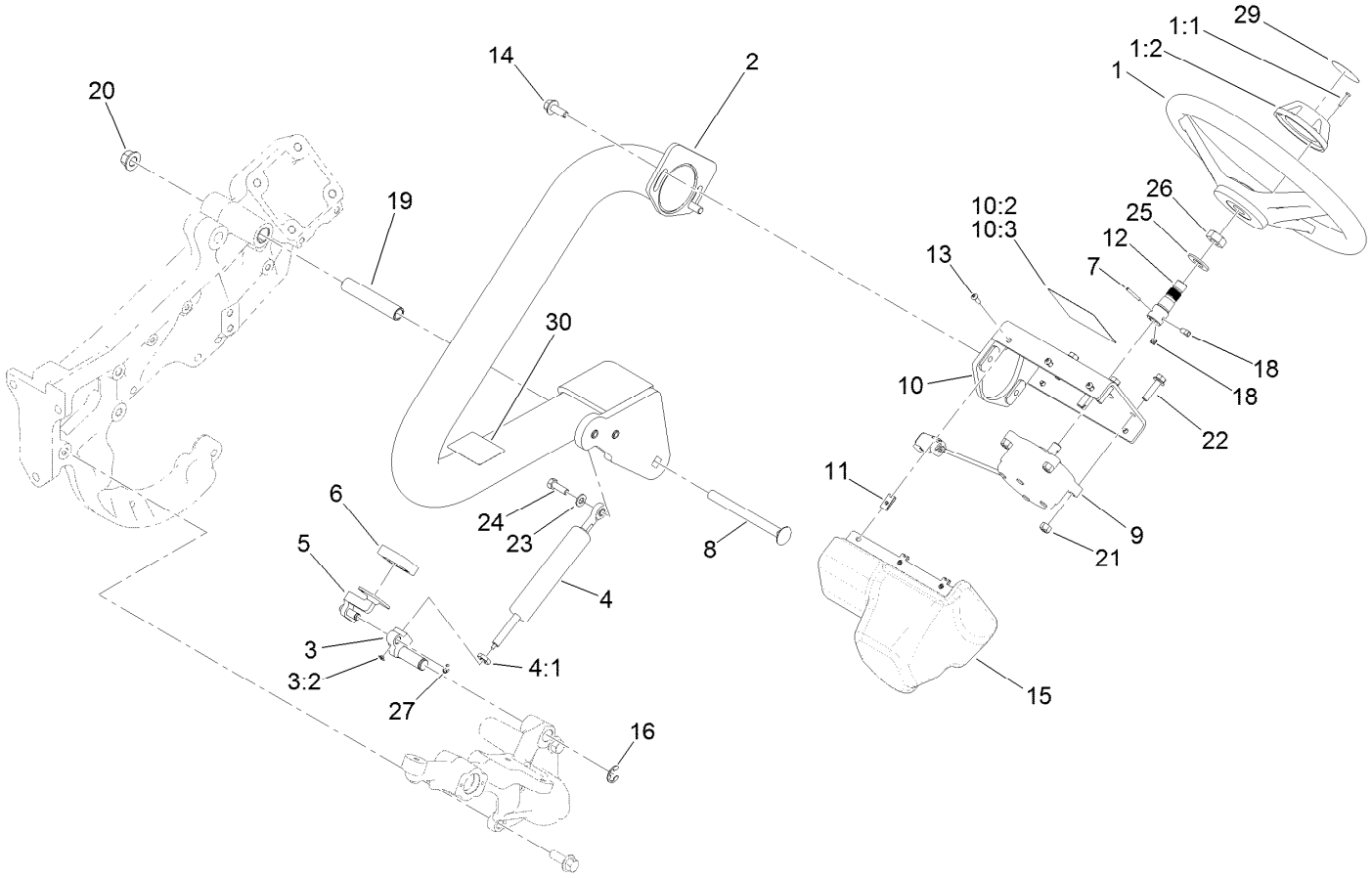

Steering Assembly

Ref.	Part Number	Qty.	Description
1	75-0560	1	Steering Wheel ASM
1:1	32144-21	1	Screw
1:2	68-5140	1	Cap-Wheel, Steering
2	137-7892-01	1	Arm-Steering
3	133-9030	1	Pivot Lever ASM
3:2	133-8995	1	Bushing
4	133-9036	1	Cylinder-Gas
4:1	112-8617	1	Nut-Hex
5	132-9848	1	Lever
6	74-9110	1	Pad-Pedal, Reverse
7	933156	1	Pin-Roll
8	114-7723	1	Screw-CARR
9	132-9935	1	Steering Unit
10	137-8092	1	Steering Mount ASM
10:2	139-8320	1	Decal-Danger
10:3	139-8321	1	Decal-Danger, CE
11	3290-277	6	Nut-Speed

Ref.	Part Number	Qty.	Description
12	136-4262	1	Shaft-Adapter, Steering
13	3274-39	6	Screw-HSBH
14	3234-42	2	Screw-HHF
15	119-9300	1	Cover-Valve, Steering
16	32120-19	1	E-Ring
18	126-3824	2	Screw-Set, SQH
19	117-9002	1	Spacer
20	99-5107	1	Nut-Lock
21	3296-29	4	Nut-Lock, NI
22	119-4036	4	Screw-HHF
23	3256-23	1	Washer-Plain
24	322-5	1	Screw-HH
25	3256-27	1	Washer-Flat
26	3296-33	1	Nut-Lock, NI
27	701197	1	E-Ring
29	68-5370	1	Decal
30	119-9346	1	Decal-Arm, Steering

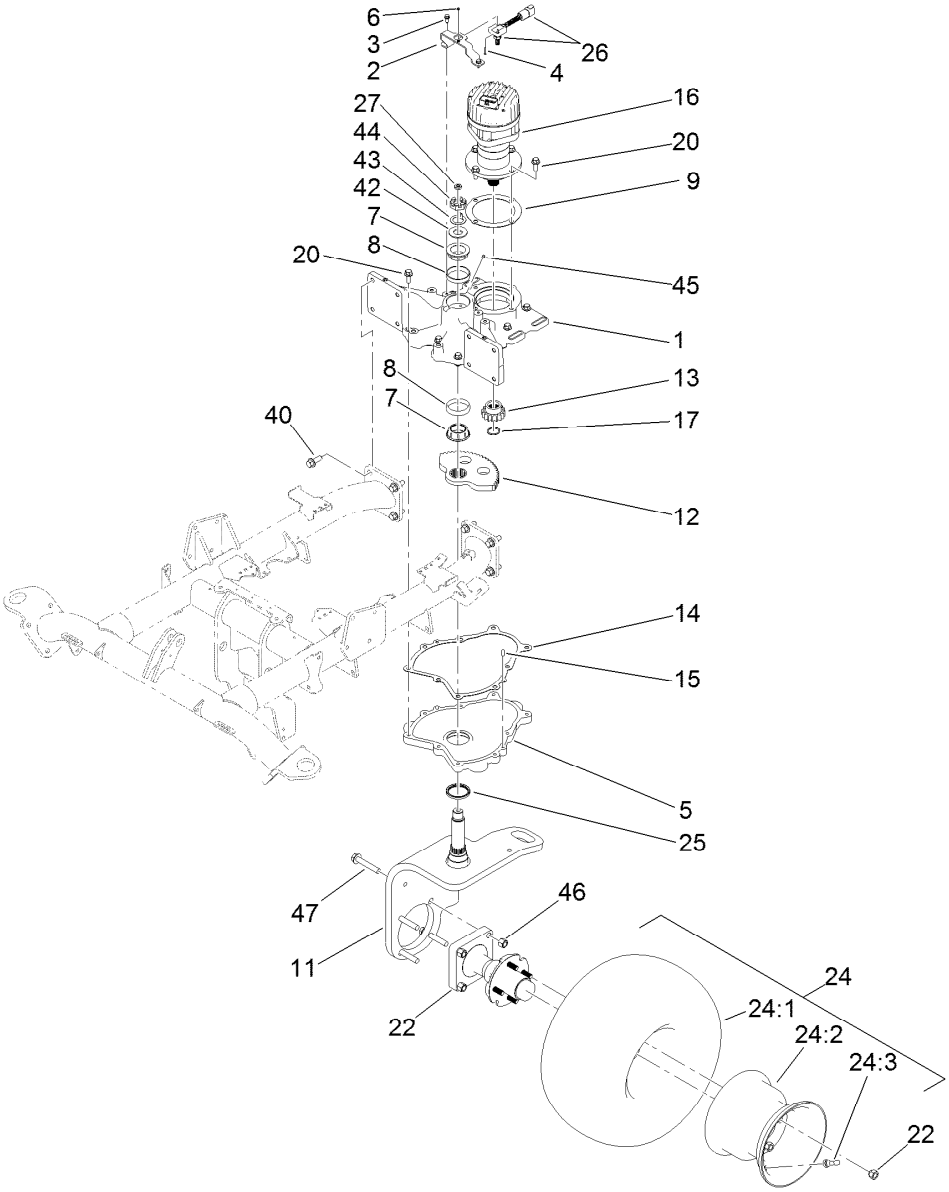

Wheel and Tire Assembly

Ref.	Part Number	Qty.	Description
1	139-8314	1	Housing-Steering
2	137-7868-03	1	Bracket-Sensor, Steering
3	32144-10	2	Screw-HWH
4	3290-313	2	Screw-SPH
5	137-8166-03	1	Housing
6	3296-52	2	Nut-Lock, NI
7	107-7589	2	Cone-Bearing (W/ Seal)
8	107-7590	2	Cup-Bearing
9	133-0347	1	Gasket
11	139-8313	1	Fork-Caster
12	137-8170	1	Gear-Spur, 64T
13	133-0346	1	Pinion-16T
14	133-0348	1	Gasket
15	136-2667	2	Pin-Dowel
16	133-0349	1	Steering Unit ASM
17	32120-2	1	Ring-Retaining
20	3234-42	13	Screw-HHF

Ref.	Part Number	Qty.	Description
22	119-4490	1	Wheel Spindle ASM
24		1	Wheel And Tire ASM ●
24:1	120-2783	1	Tire
24:2	217-60	1	Rim
24:3	232-27	1	Stem-Valve
25	108-7019	1	Seal-Shaft
26	122-0914	1	Sensor-Rotary, Body/Magnet Matched Set
27	112-8617	1	Nut-Hex
40	117-9035	8	Screw-HHF
42	137-8171	1	Washer
43	137-7943	1	Washer-Tang
44	137-7942	1	Nut-Castle
45	302-59	1	Plug-EXT Hex Spl
46	3296-23	4	Nut-Lock, NI
47	3234-40	4	Screw-HF

● Not serviced separately

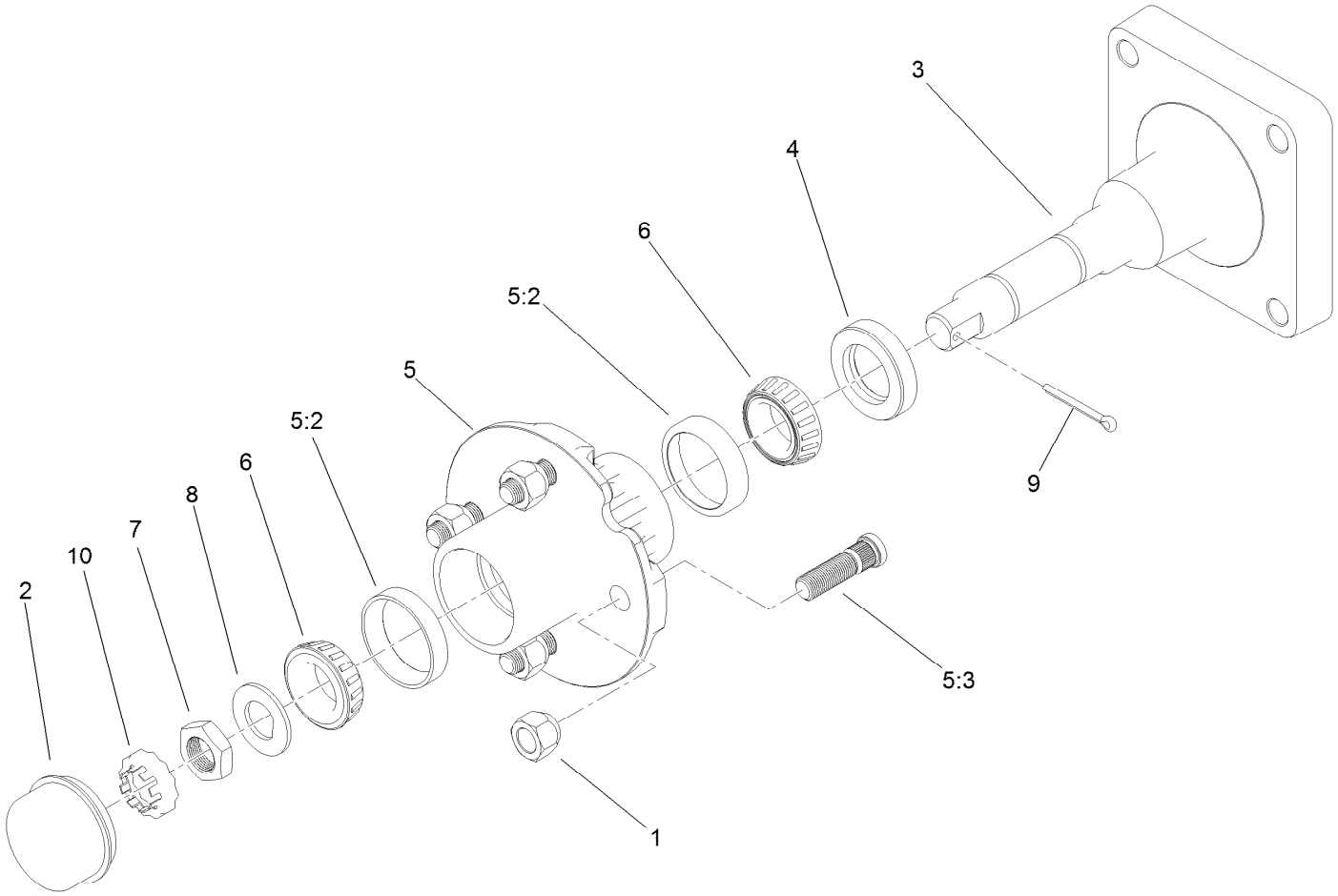

Wheel Spindle Assembly No. 119-4490

Ref.	*Part Number*	*Qty.*	*Description*
1	242-50	4	Nut-Lug
2	241-119	1	Cap-Dust
3	112-7173	1	Spindle
4	112-1690	1	Seal-Oil
5	117-9093	1	Hub ASM
5:2	254-72	2	Bearing-Cup, Tapered
5:3	114-3918	4	Stud-Wheel
6	254-92	2	Cone-Bearing, Outer
7	117-8260	1	Nut
8	117-8259	1	Washer-Spindle
9	3272-18	1	Pin-Cotter
10	93-0307	1	Nut-Lock, Retainer

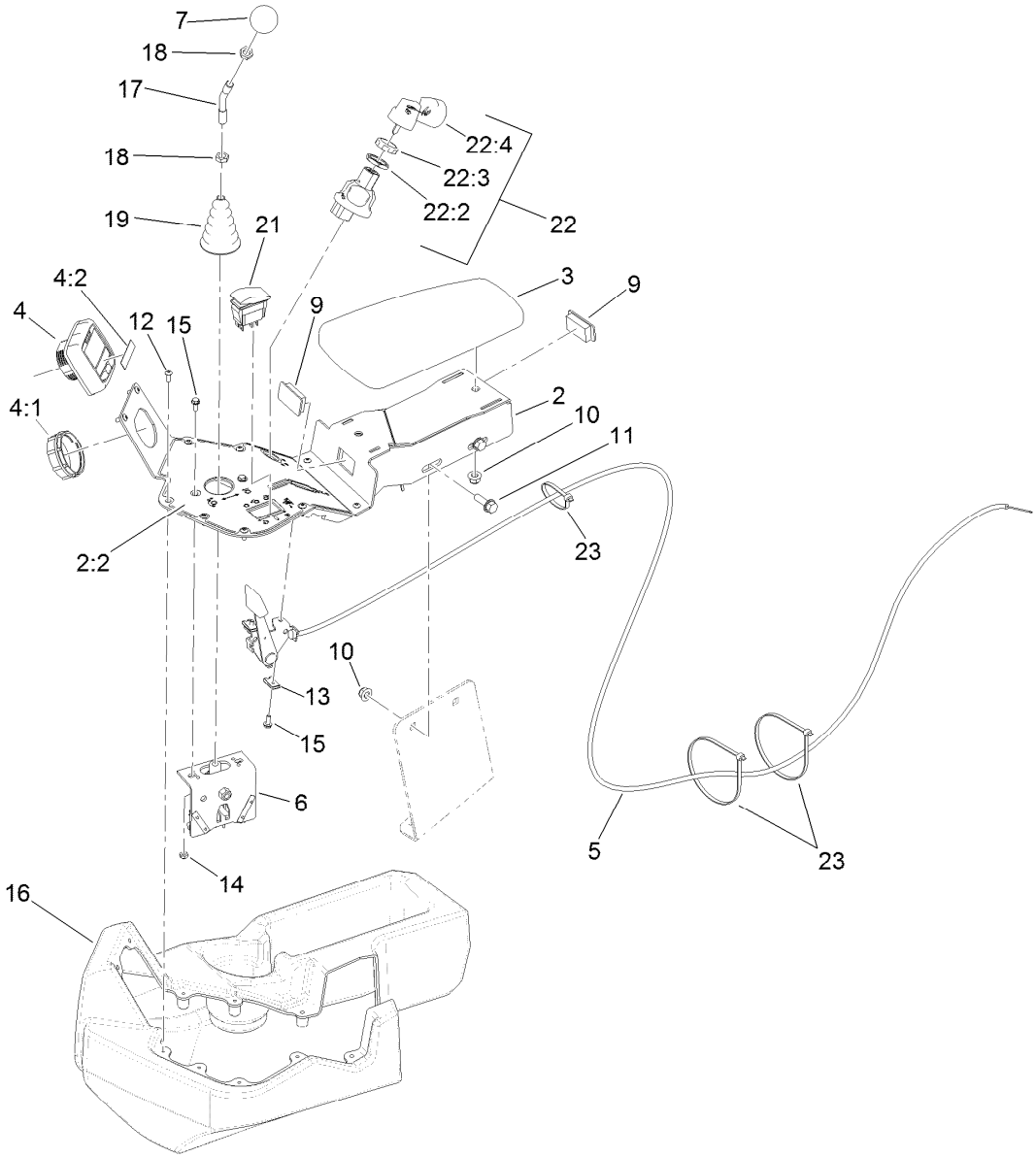

Console Assembly

Ref.	Part Number	Qty.	Description
2	137-8093	1	Console ASM
2:2	133-0098	1	Decal-Console
3	108-7602	1	Rest-Arm
4	120-6310	1	LCD Display ASM
4:1	120-4630	1	Nut-Display
4:2	120-6311	1	Decal-Display
5	133-5825	1	Lever-Choke
6	106-4167	1	Joystick Bracket ASM
7	120-9752	1	Knob-Round, Yellow
9	99-7420	2	Plug-Hole
10	104-8300	4	Nut-HF, NI
11	3234-29	2	Screw-HHF
12	115-9830	10	Screw-HSBH

Ref.	Part Number	Qty.	Description
13	3290-277	2	Nut-Speed
14	3296-12	2	Nut-Lock, NI
15	3290-321	4	Screw-HWH
16	132-9955	1	Cover-Console
17	121-6681	1	Stem-Joystick
18	3218-3	2	Nut-Jam
19	93-5961	1	Boot-Lever
21	112-3530	1	Switch-Rocker, On-On-On
22	121-5159	1	Ignition Switch ASM
22:2	121-5160	1	Nut-Hex
22:3	121-5161	1	Nut-Face
22:4	121-5162	1	Set-Key, Ignition
23	3290-379	3	Tie-Cable

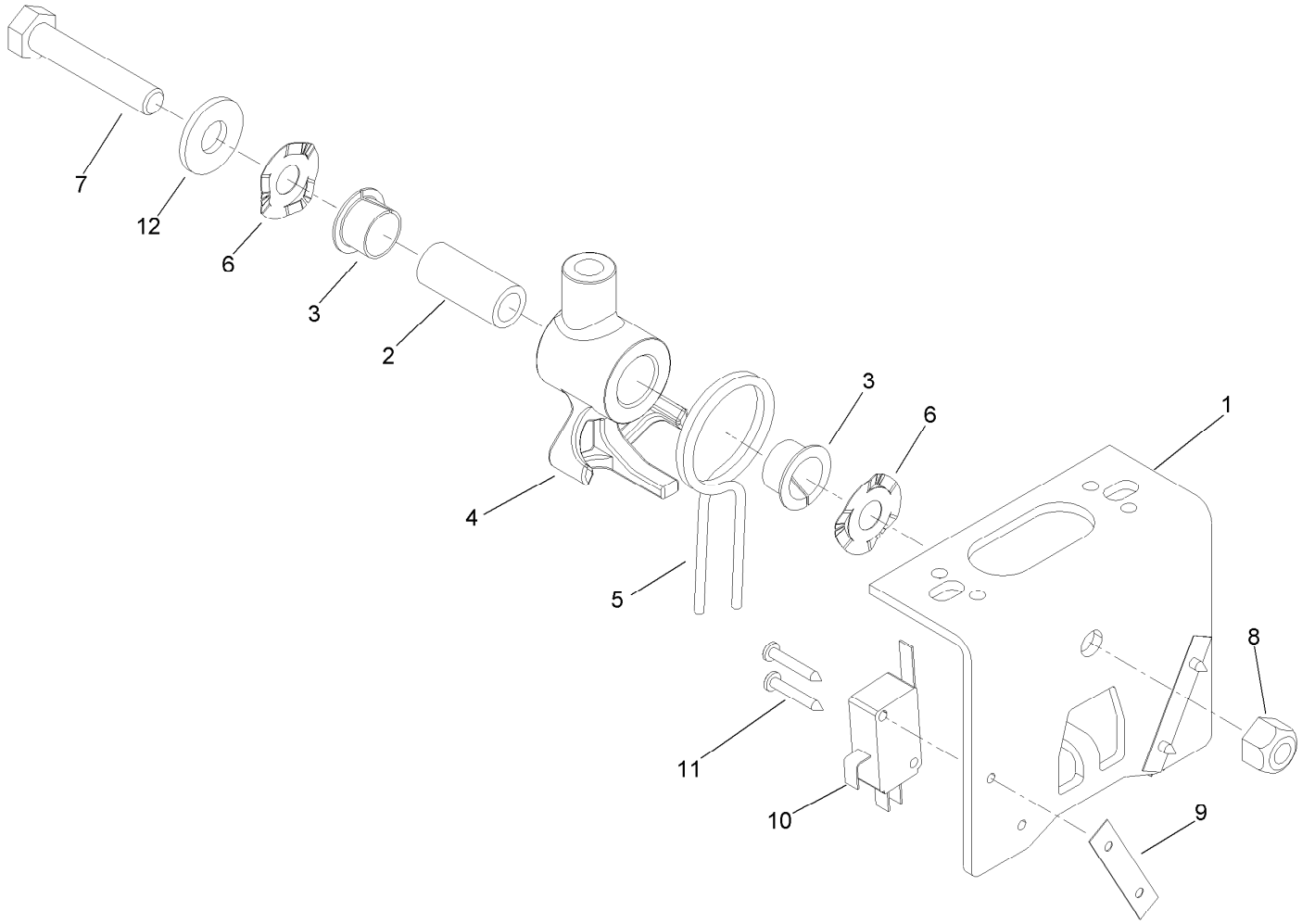

Joystick Bracket Assembly No. 106-4167

Ref.	*Part Number*	*Qty.*	*Description*
1	115-5357-03	1	Bracket-Joystick
2	106-4192	1	Spacer
3	93-5547	2	Bushing-Nylon
4	105-7507	1	Hub-Pivot, Joystick
5	105-8289	1	Spring-Torsion
6	106-4193	2	Washer-Finger, Spring
7	322-9	1	Screw-HH
8	3296-29	1	Nut-Lock, NI
9	3290-354	2	Nut-Speed
10	108-6496	2	Switch (W/Boot)
11	95-3003	4	Screw-PPHTF
12	3256-3	1	Washer-Flat

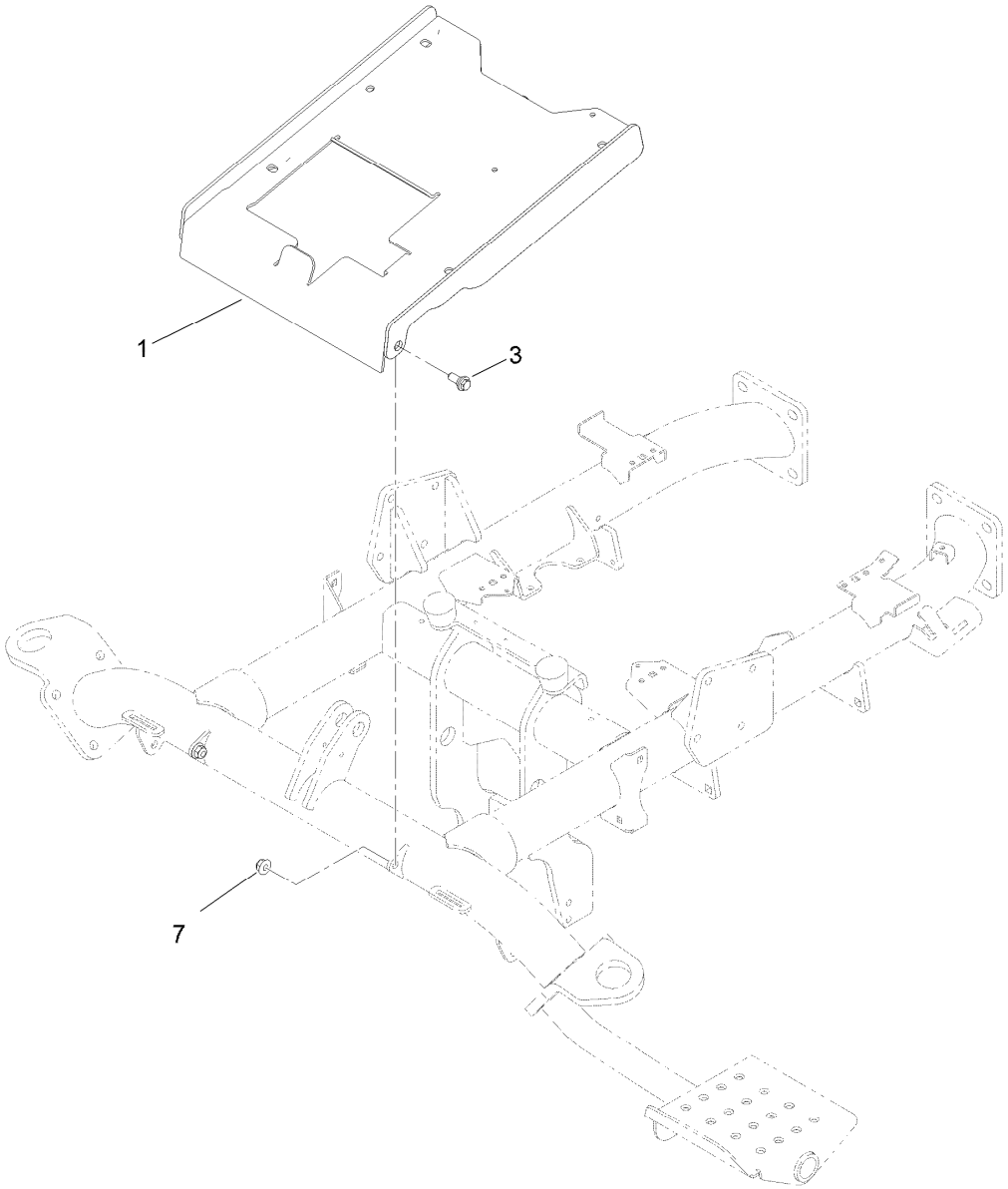

Seat Plate Assembly

Ref.	Part Number	Qty.	Description
1	137-8199-03	1	Seat Plate ASM
3	94-7582	2	Bolt-Shoulder
7	104-8301	2	Nut-HF, NI

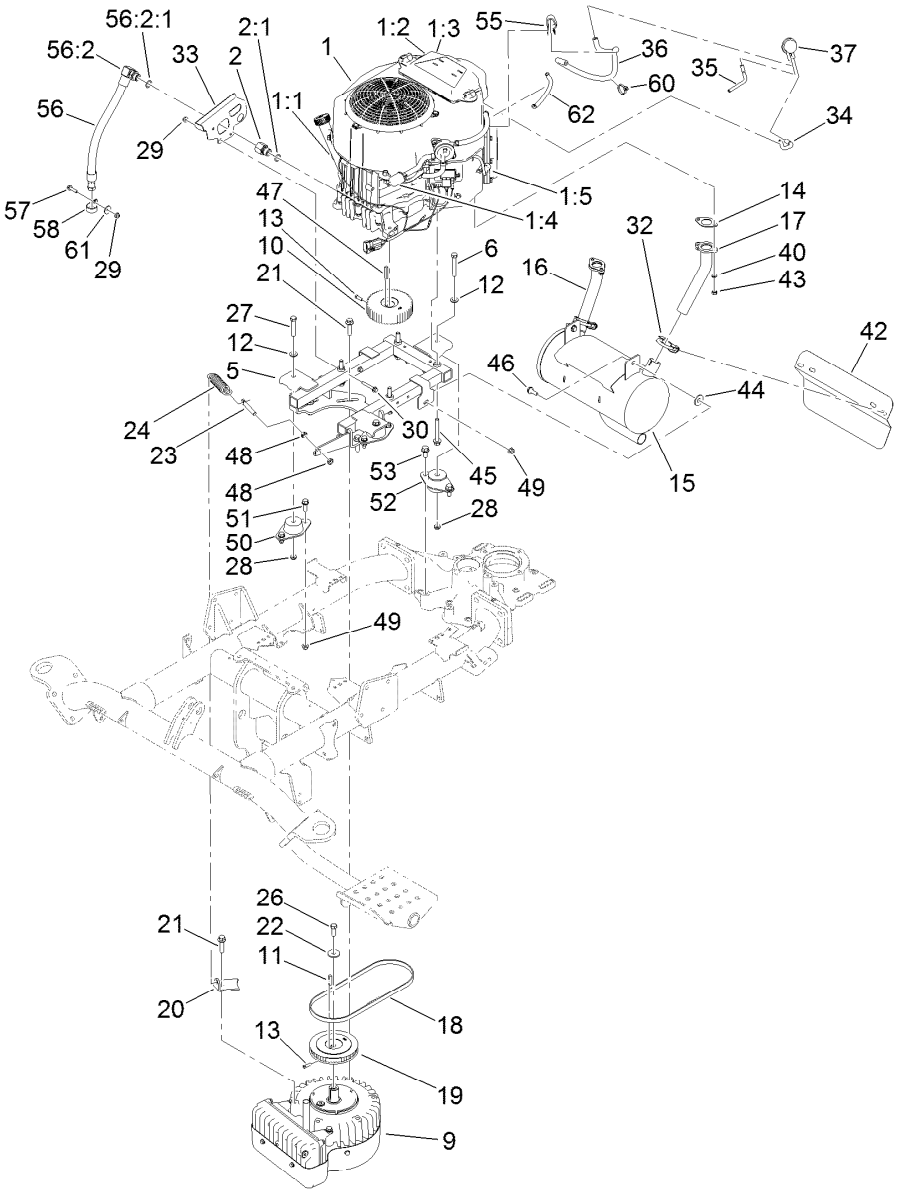

Engine Assembly

Ref.	Part Number	Qty.	Description
1		1	Engine-Kawasaki, Fs481V-S34 ■●
1:1	119-5852	1	Filter-Oil
1:2	120-7447	1	Filter-Air, Foam
1:3	120-7448	1	Filter-Air, Paper
1:4	121-4570	1	Filter-Fuel
1:5	92-2153	1	Plug-Spark
2	139-8416	1	Fitting-Straight
2:1	237-69	1	O-Ring
5	133-5797-03	1	Frame-Engine
6	323-12	1	Screw-HH
9	127-2580	1	Generator/Controller ASM
10	137-8128	1	Pulley-Belt
11	5-0698	1	Key
12	3256-24	3	Washer-Flat
13	3241-6	4	Screw-SQH
14	1-653313	2	Gasket-Exhaust
15	133-5745	1	Muffler

Ref.	Part Number	Qty.	Description
16	133-5750	1	Pipe-Exhaust, LH
17	133-5751	1	Pipe-Exhaust, RH
18	137-7828	1	Belt-Timing
19	137-8131	1	Pulley ASM
20	133-5737	1	Bracket-Spring
21	114-4681	5	Screw-HHF
22	63-8410	1	Washer
23	133-0332	1	Pin-Adjustment, Generator
24	133-5738	1	Spring-Extension
26	3211-4	1	Screw-HH
27	323-10	2	Screw-HH
28	3296-59	3	Nut-Lock, NI
29	104-7201	3	Nut-HF, NI
30	32105-18	2	Screw-HHF
32	104-4090	2	Clamp-Muffler
33	132-9908	1	Shield-Drip
34	119-8502	1	Hose-Vent, Formed
35	119-8501	1	Hose-Vent, Formed

● Not serviced separately

■ Obtain parts from www.kawpower.com

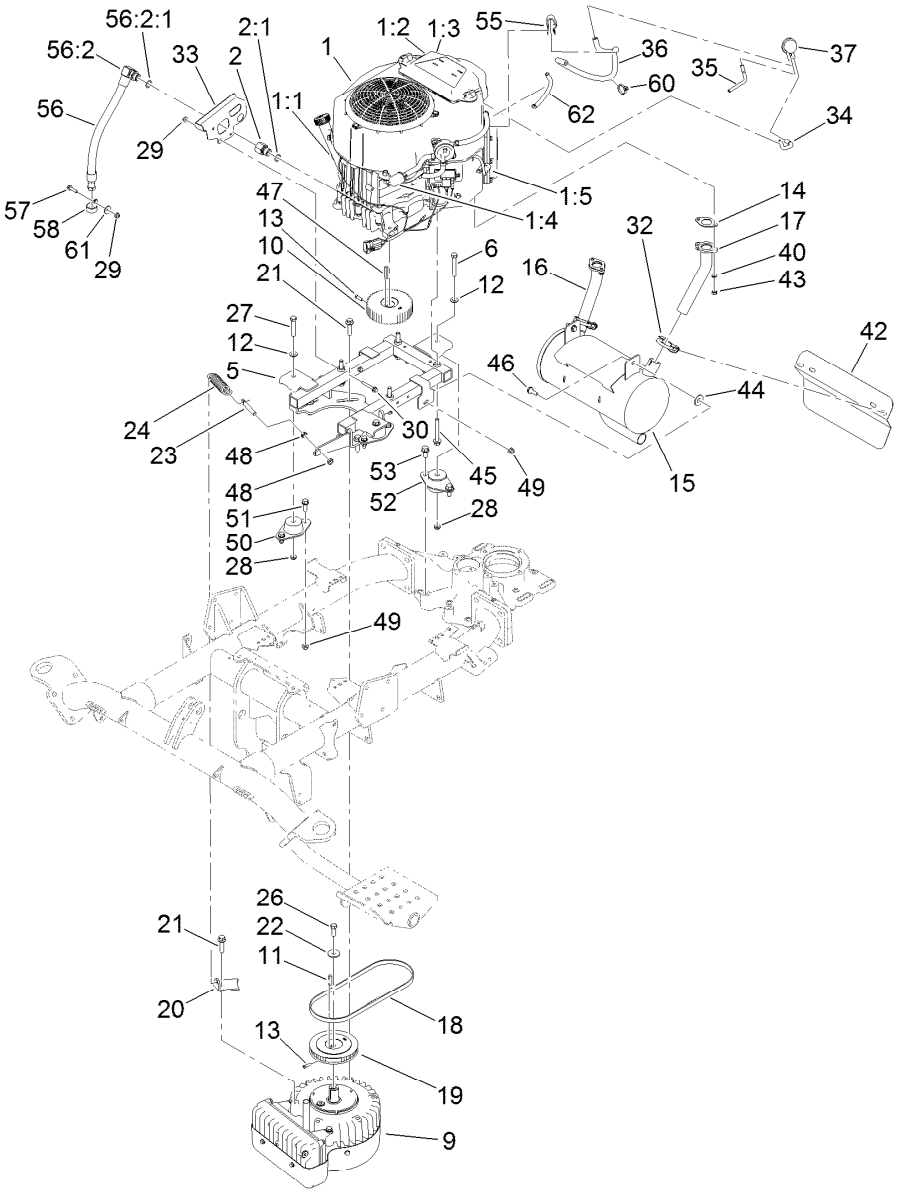

Engine Assembly (continued)

Ref.	Part Number	Qty.	Description
36	110-5701	1	Hose-Fuel
37	116-2232	1	Valve-Control, Vacuum
40	114-3550	4	Washer-Lock
42	132-9915-03	1	Shield-Exhaust, Rear
43	114-3549	4	Nut
44	3290-465	2	Washer-Belleville
45	132-9947	4	Screw-Hfh
46	27-0410	2	Screw-Shoulder
47	67-7490	1	Key-Square
48	3220-3	2	Nut-HJ
49	104-8300	6	Nut-HF, NI
50	121-9076	2	Mount-Engine

Ref.	Part Number	Qty.	Description
51	3234-29	4	Screw-HHF
52	131-1821	1	Mount-Engine
53	3234-25	2	Screw-HHF
55	92-5753	1	Clamp-Hose
56	137-7864	1	Drain Hose ASM
56:2		1	Plug-HH ●
56:2:1	237-42	1	O-Ring
57	120-4654	1	Screw-HHF
58	2412-106	1	Clamp-R
60	3290-379	1	Tie-Cable
61	3256-67	1	Washer
62	139-8415	1	Tubing-Convoluted, Slit

● Not serviced separately

■ Obtain parts from www.kawpower.com

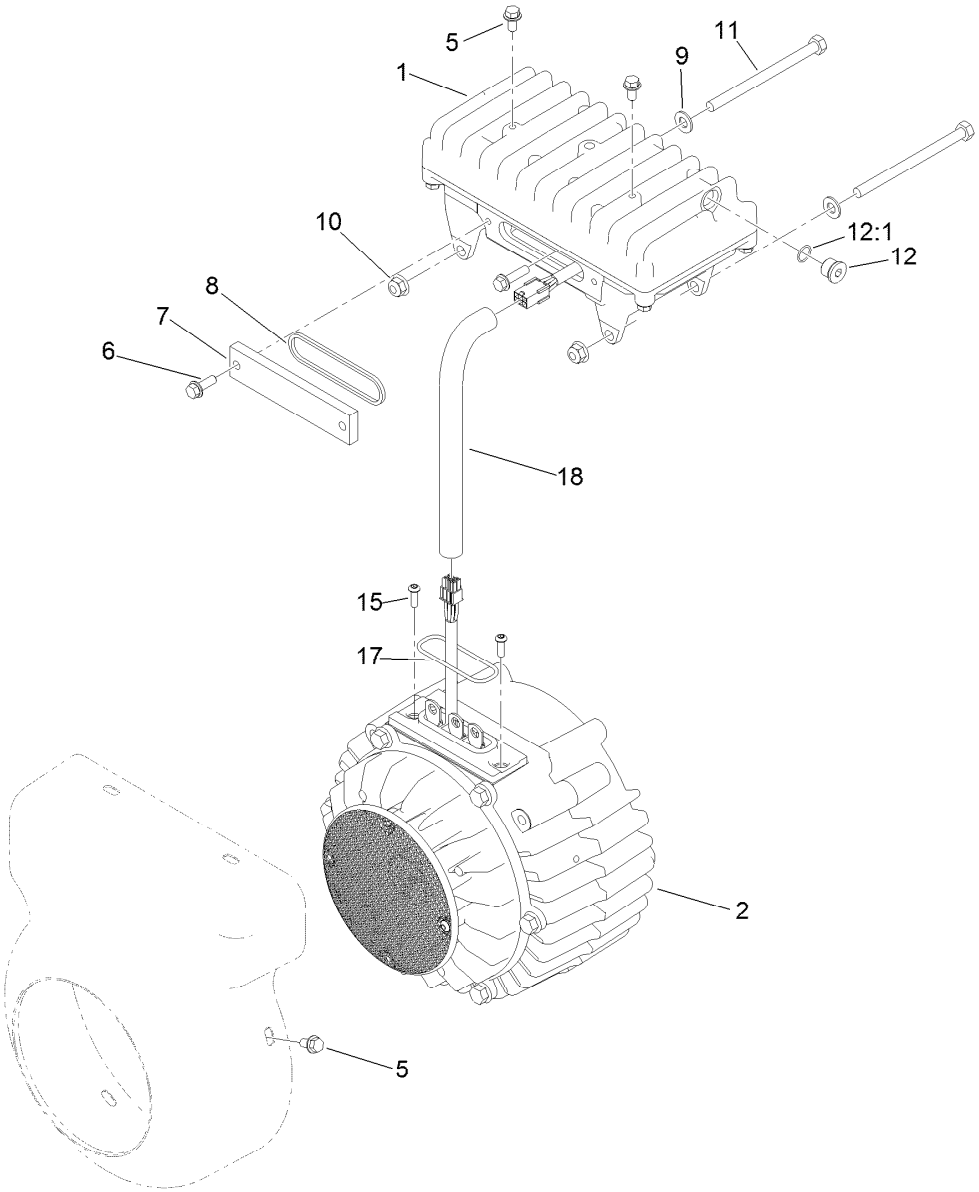

Generator/Controller Assembly No. 127-2580

Ref.	*Part Number*	*Qty.*	*Description*
1	117-8181	1	Controller ASM
2	127-2579	1	Generator ASM
5	119-1065	6	Screw-HWH
6	119-1138	2	Screw-HWH
7	120-4511	1	Cover-Access
8	120-4513	1	Gasket-Cover, Access
9	3256-23	2	Washer-Plain
10	104-8300	2	Nut-HF, NI
11	322-38	2	Screw-HH
12	353-989	1	Plug-Hex, Hollow
12:1	237-42	1	O-Ring
15	119-7568	2	Screw-HSBH
17	117-8176	1	O-Ring
18	127-2747	1	Sleeve-Harness, Expandable

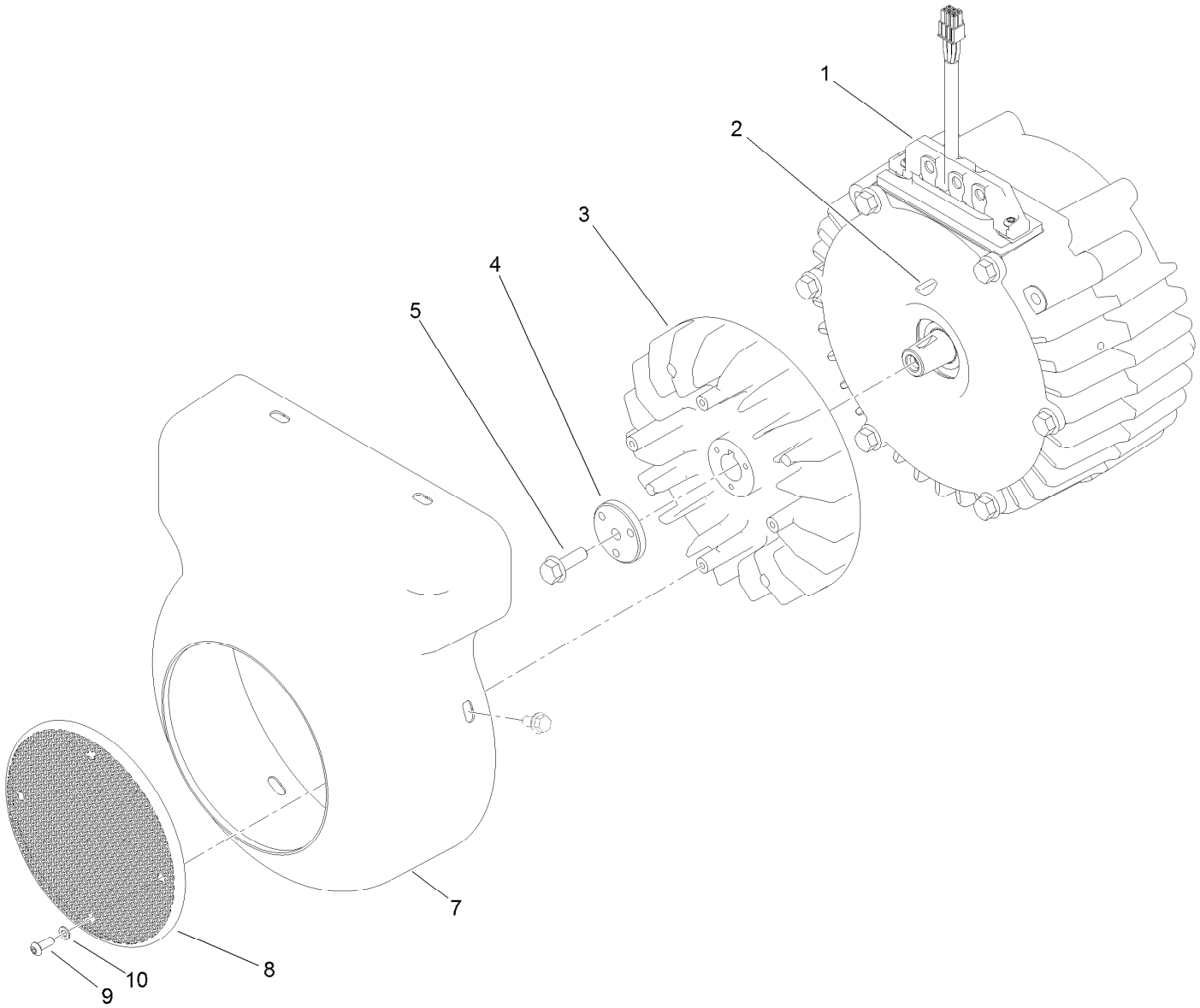

Generator Assembly No. 127-2579

Ref.	*Part Number*	*Qty.*	*Description*
1	127-2578	1	Generator Service ASM
2	112-5193	1	Key-Woodruff
3	117-8184	1	Fan-Generator
4	112-9604	1	Collar
5	33104-025	1	Screw-HHF
7	121-7082	1	Cover-Generator
8	120-4582	1	Screen-Fan
9	120-4564	4	Screw-BHCS
10	120-4563	4	Washer-Flat

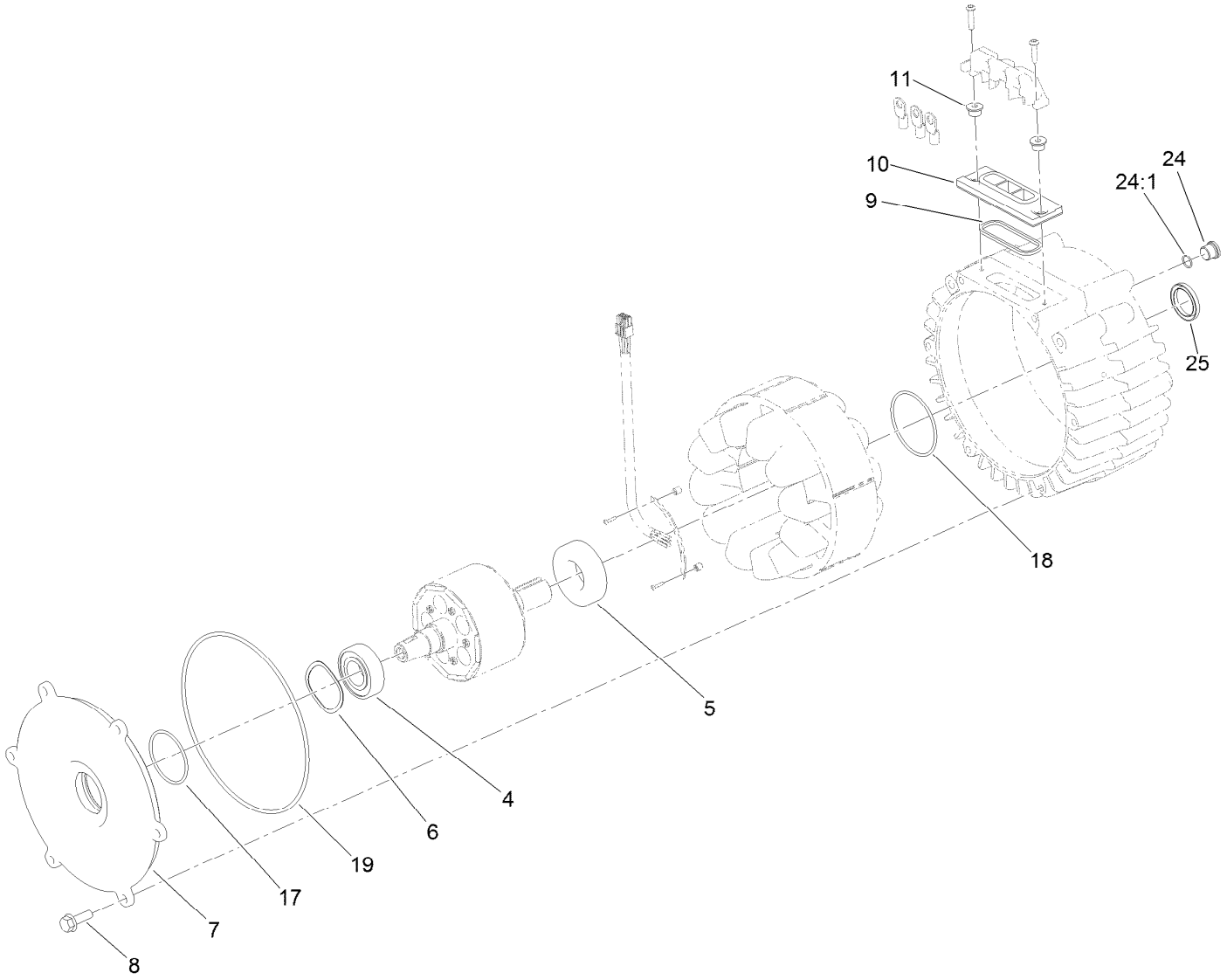

Generator Service Assembly No. 127-2578

Ref.	Part Number	Qty.	Description
4	120-4621	1	Bearing
5	120-4622	1	Bearing
6	117-8148	1	Washer-Wave
7	117-4514	1	Cover-Generator
8	33104-025	6	Screw-HHF
9	120-4518	1	Gasket-Isolator
10	112-5155	1	Isolator-Thermal
11	117-4501	2	Spacer-Shoulder
17	107-3244	1	O-Ring
18	117-8177	1	O-Ring
19	112-5199	1	O-Ring
24	353-989	1	Plug-Hex, Hollow
24:1	237-42	1	O-Ring
25	125-1509	1	Seal

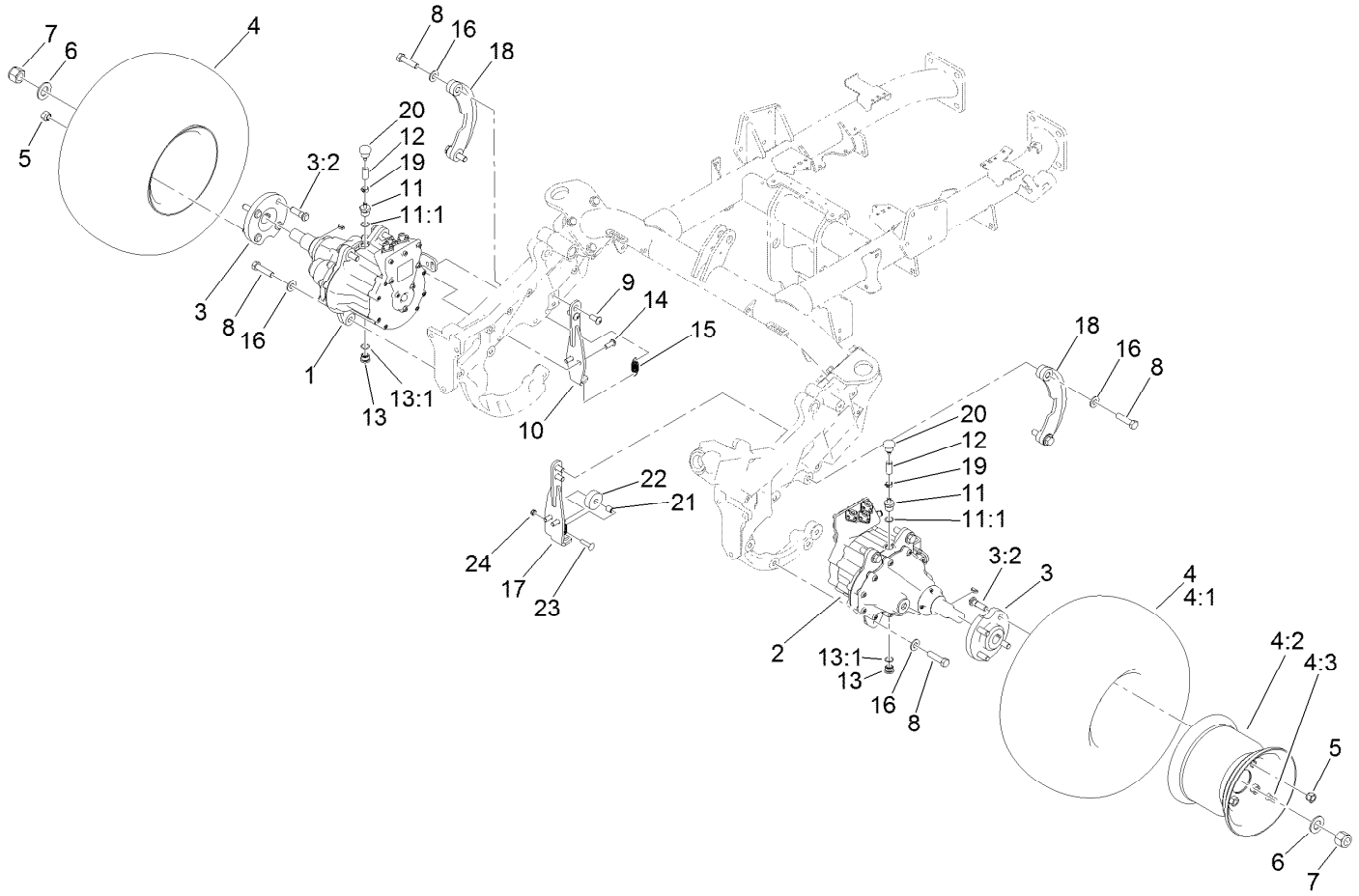

Traction Assembly

Ref.	Part Number	Qty.	Description
1	127-1525	1	RH Wheel Motor ASM
2	127-1527	1	LH Wheel Motor ASM
3	121-9264	2	Wheel Hub ASM
3:2	85-6540	4	Stud-Drive
4	117-9030	2	Wheel And Tire ASM
4:1	120-2783	1	Tire
4:2	117-9032	1	Rim
4:3	232-27	1	Stem-Valve
5	242-50	8	Nut-Lug
6	AU496-11094	2	Washer-Flat
7	137-7973	2	Nut-Hex
8	325-8	12	Screw-HH
9	3274-94	4	Screw-HSBH
10	137-7727-01	1	Gusset-Motor, RH
11	139-8331	2	Fitting-Straight

Ref.	Part Number	Qty.	Description
11:1	237-79	1	O-Ring
12	139-8326	2	Hose-Fuel
13	133-7659	2	Plug ASM
13:1	237-79	1	O-Ring
14	3274-105	4	Screw-HSBH
15	136-7153	2	Spring-Extension
16	87-7270	12	Washer-Thrust
17	139-8348-01	1	Gusset-LH
18	132-9996-01	2	Link-Support
19	92-2379	2	Clamp-Hose
20	139-8332	2	Vent-Barb
21	88-7450	1	Spacer-Lever, Control
22	139-8346	1	Roller
23	112-6950	1	Screw-CARR
24	3296-47	1	Nut-Lock,NI

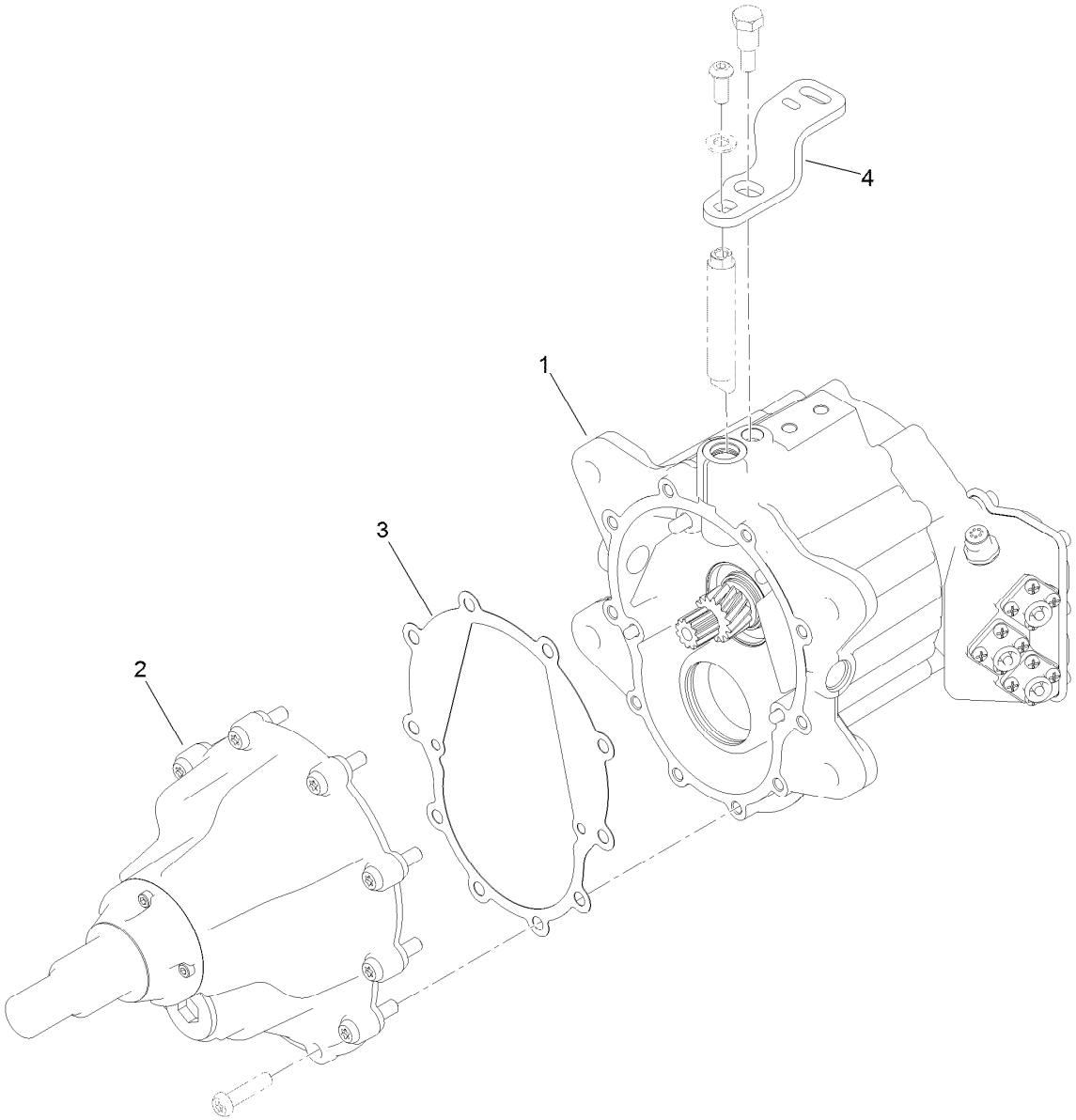

RH Wheel Motor Assembly No. 127-1525

Ref.	*Part Number*	*Qty.*	*Description*
1	127-1526	1	RH Motor ASM
2	127-1529	1	Gear Box ASM
3	121-9254	1	Gasket-Gearbox
4	132-9873	1	Lever-Brake, RH

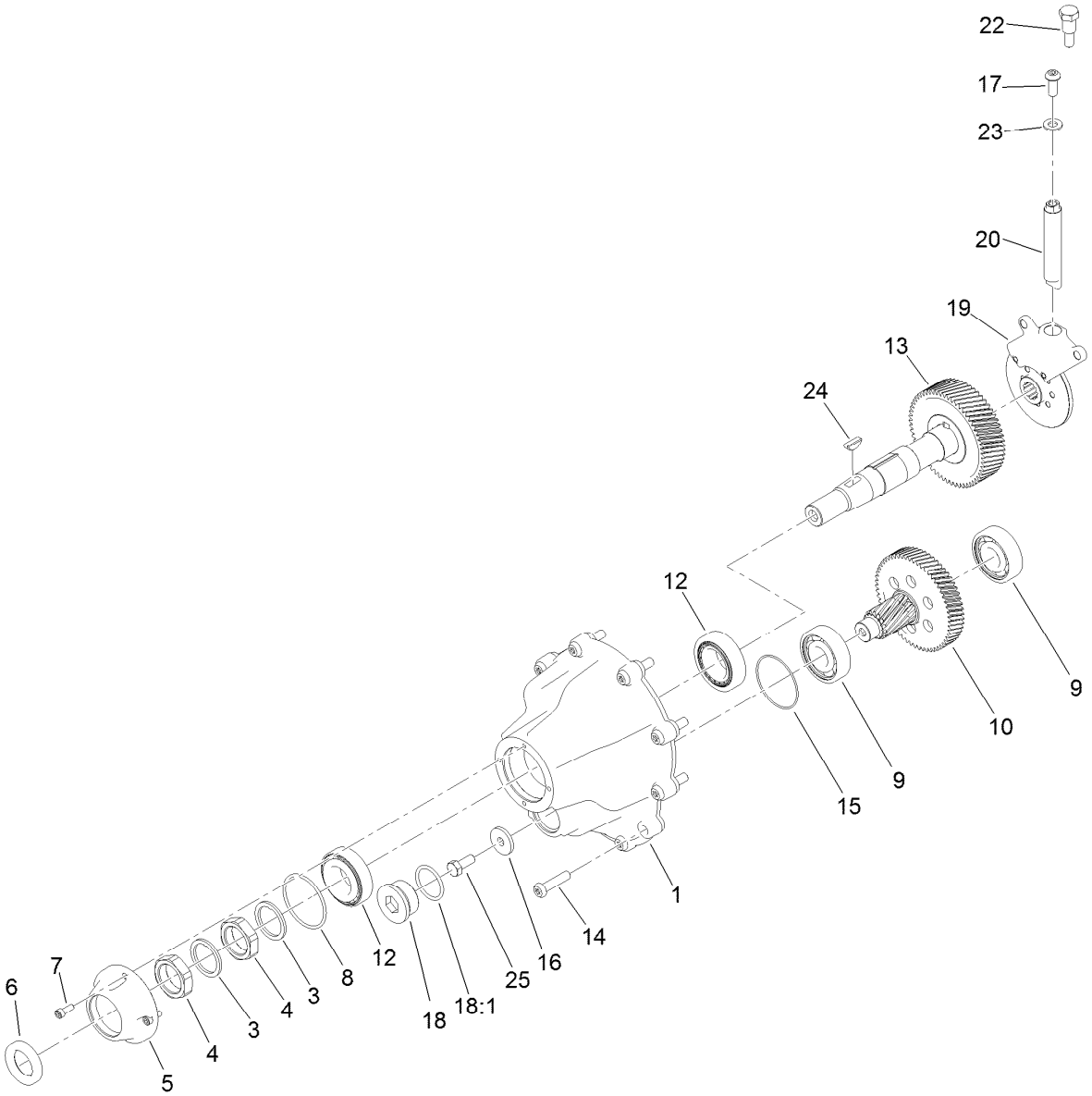

Gearbox Assembly No. 127-1529

Ref.	Part Number	Qty.	Description
1	127-1559	1	Cover-Motor, Axle
3	121-5235	2	Washer-Special
4	121-9263	2	Nut-Jam
5	127-1561	1	Cover-Nose, Axle
6	137-7857	1	Seal-Shaft
7	112-5181	4	Screw -HSH
8	108-9919	1	O-Ring
9	121-9266	2	Bearing-Ball
10	132-9978	1	Countershaft Gear ASM
12	121-9256	2	Bearing-Taper
13	132-9841	1	Shaft ASM
14	127-1519	10	Screw-BHCS

Ref.	Part Number	Qty.	Description
15	121-9273	1	O-Ring
16	132-9927	1	Washer-Flat
17	3274-96	1	Screw-HSBH
18	105-3921	1	Fitting-Plug
18:1	237-146	1	O-Ring
19	132-9974	1	Brake ASM
20	121-9247	1	Shaft-Brake
22	121-9250	1	Pin-Lever, Stop
23	120-9683	1	Washer-Plain
24	132-9904	1	Key-Woodruff #91
25	137-7767	1	Screw-HH

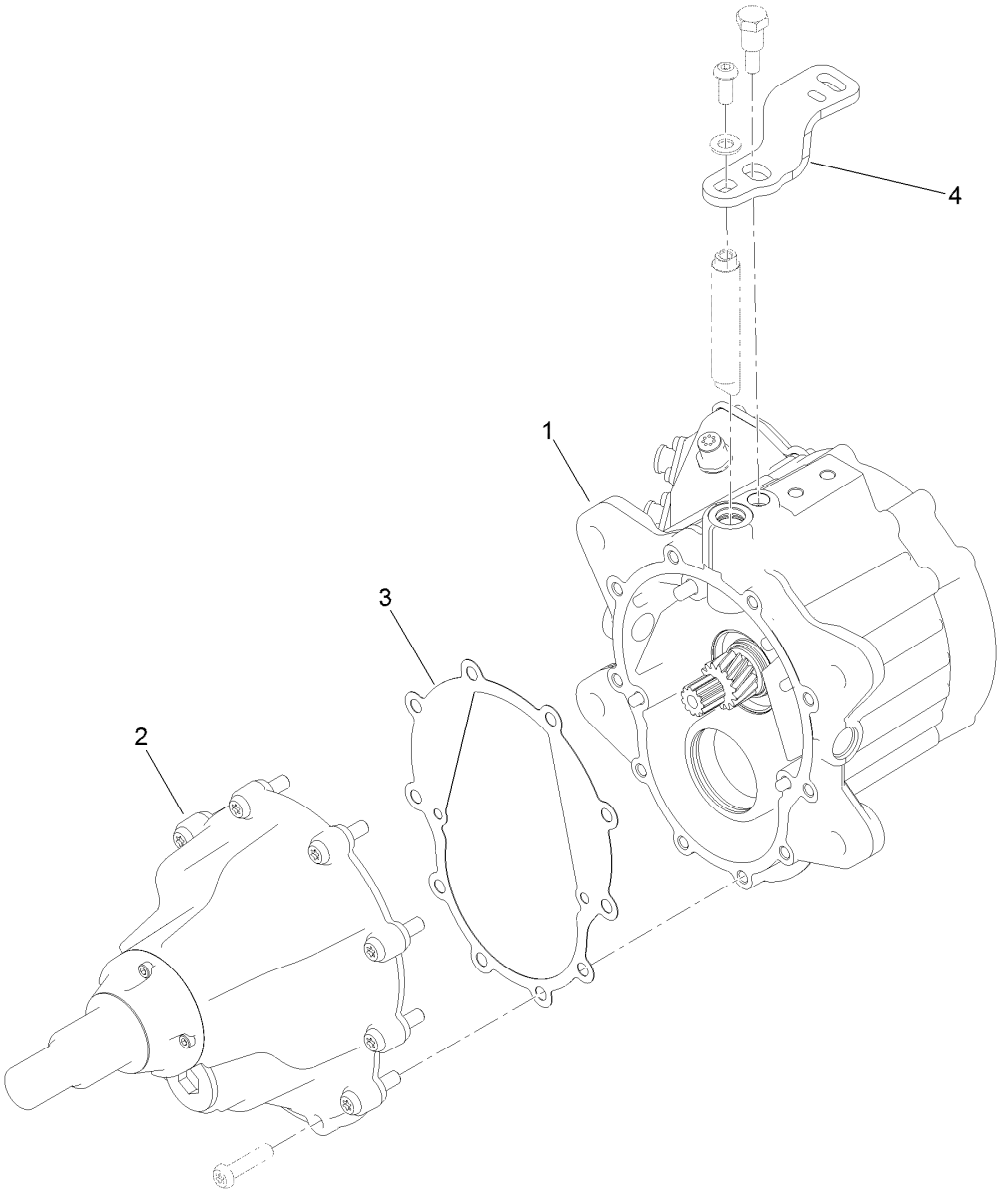

LH Wheel Motor Assembly No. 127-1527

Ref.	*Part Number*	*Qty.*	*Description*
1	127-1528	1	LH Motor ASM
2	127-1529	1	Gear Box ASM
3	121-9254	1	Gasket-Gearbox
4	132-9874	1	Lever-Brake, LH

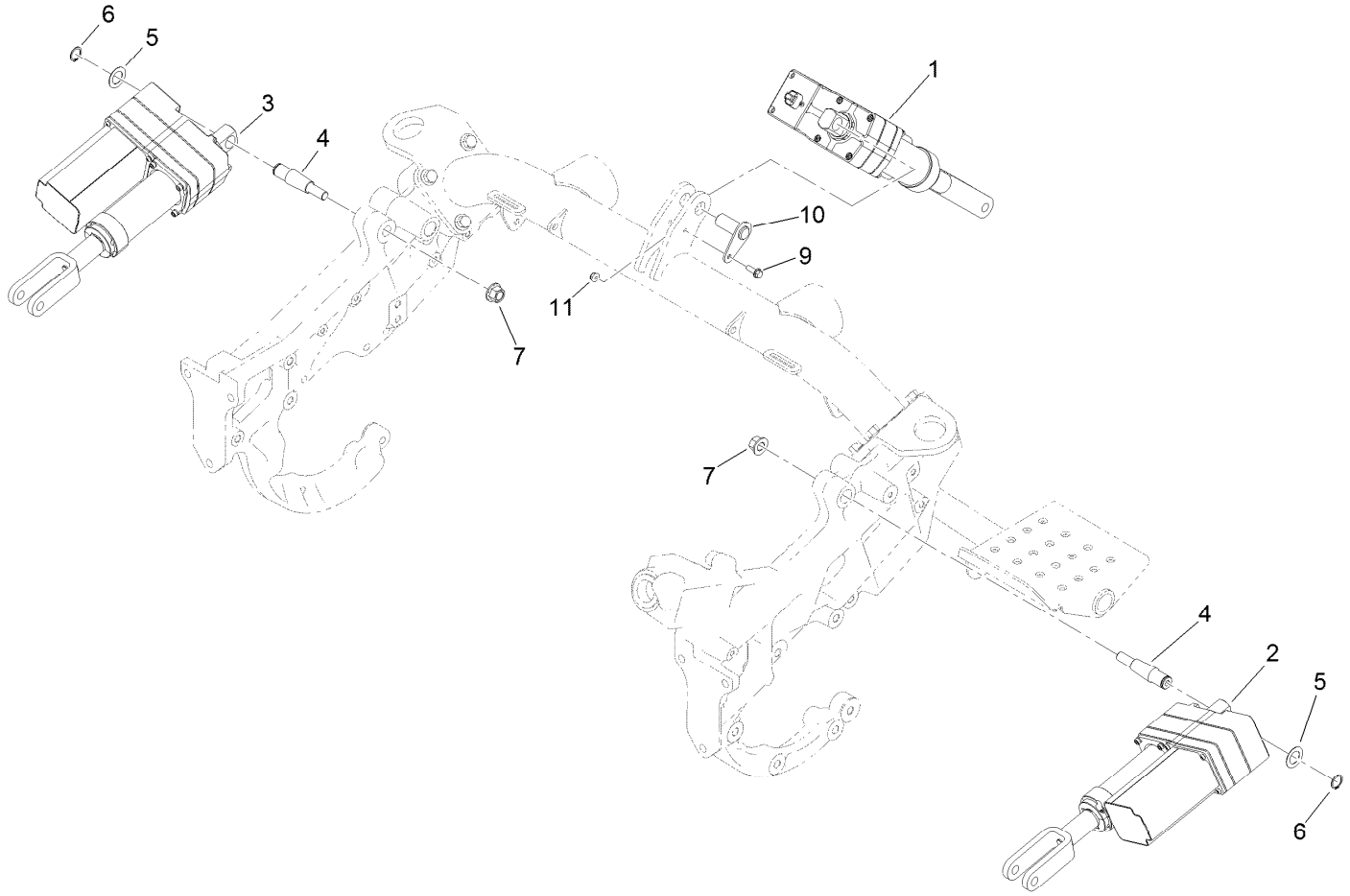

Lift Assembly

Ref.	*Part Number*	*Qty.*	*Description*
1	137-7933	1	Actuator-1 Crown
2	137-7934	1	Actuator-2 Crown
3	137-7935	1	Actuator-3 Crown
4	136-2691	2	Pin-Tapered
5	9202574	2	Washer-Flat
6	32120-72	2	Ring-Snap
7	99-5107	2	Nut-Lock
9	115-5103	1	Screw-HHF
10	137-7766	1	Pin ASM
11	104-7201	1	Nut-HF, NI

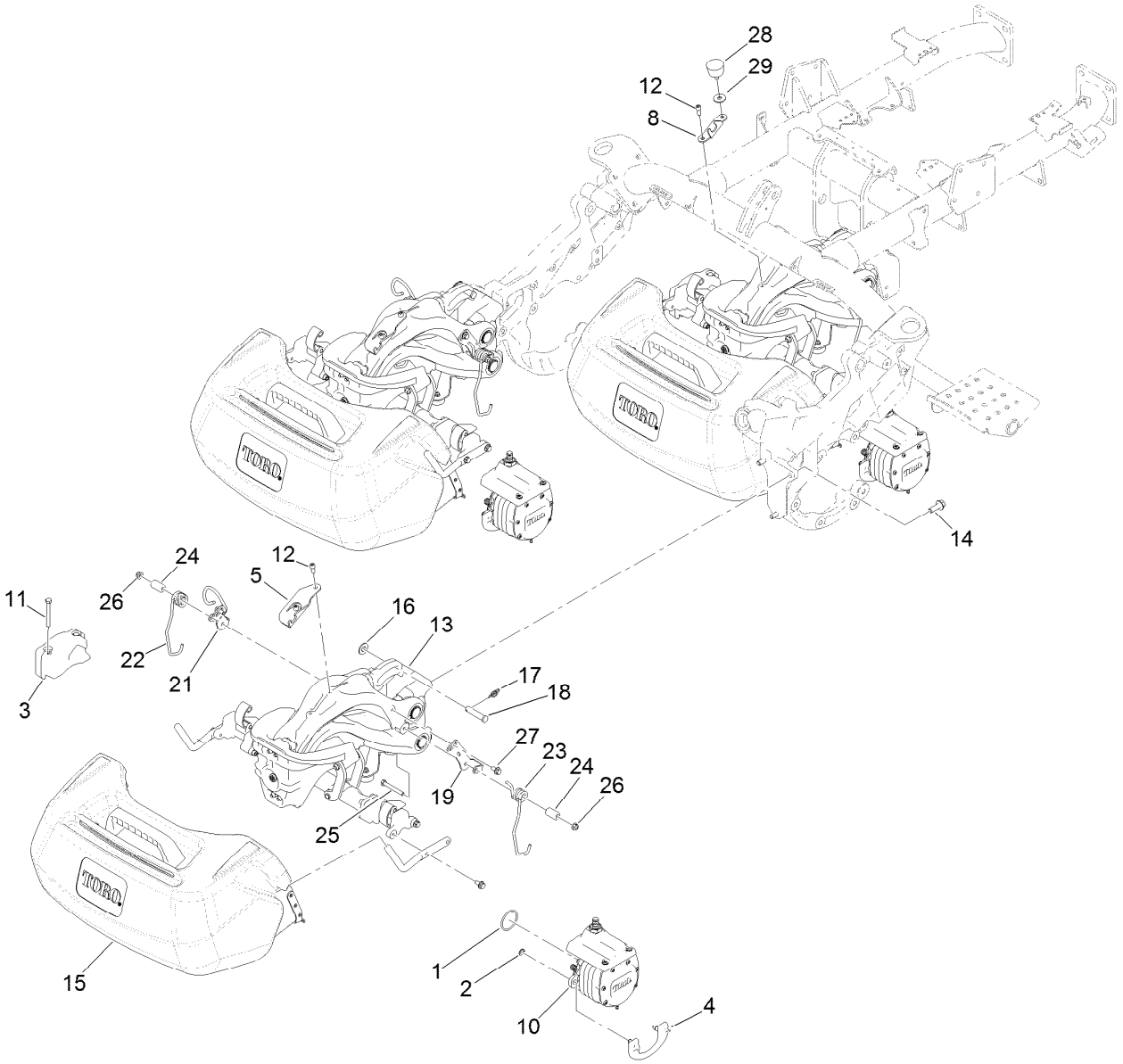

Suspension, Reel Motor and Basket Assembly

Ref.	Part Number	Qty.	Description
1	115-3298	3	O-Ring
2	133-8926	6	Ring-Retaining (Metric)
3	117-6774-03	3	Weight-Electric
4	115-5389	3	Cam-Mount, Motor
5	119-7487	2	Bracket-Clamp, Hose
8	119-7540	1	Bracket-Hose, Rear
10	138-8905	3	Electric Motor ASM
11	322-13	6	Screw-HH
12	100-2401	5	Screw-HSH
13		3	Suspension ASM ●
14	117-9035	9	Screw-HHF
15	132-9599	3	Basket ASM
16	29-8910	3	Washer
17	112-1491	3	Pin-Cotter
18	92-2739	3	Pin-Clevis
19	133-8998	3	Retainer-Spring, LH
21	133-9025	3	Bracket ASM
22	117-6826	3	Spring-Stabilizer, RH
23	117-6827	3	Spring-Stabilizer, LH
24	117-6825	6	Spacer
25	322-12	6	Screw-HH
26	104-8300	6	Nut-HF, NI
27	114-7728	6	Screw-HF
28	68-3270	1	Bumper-Rubber
29	52-2861	1	Washer

● Not serviced separately

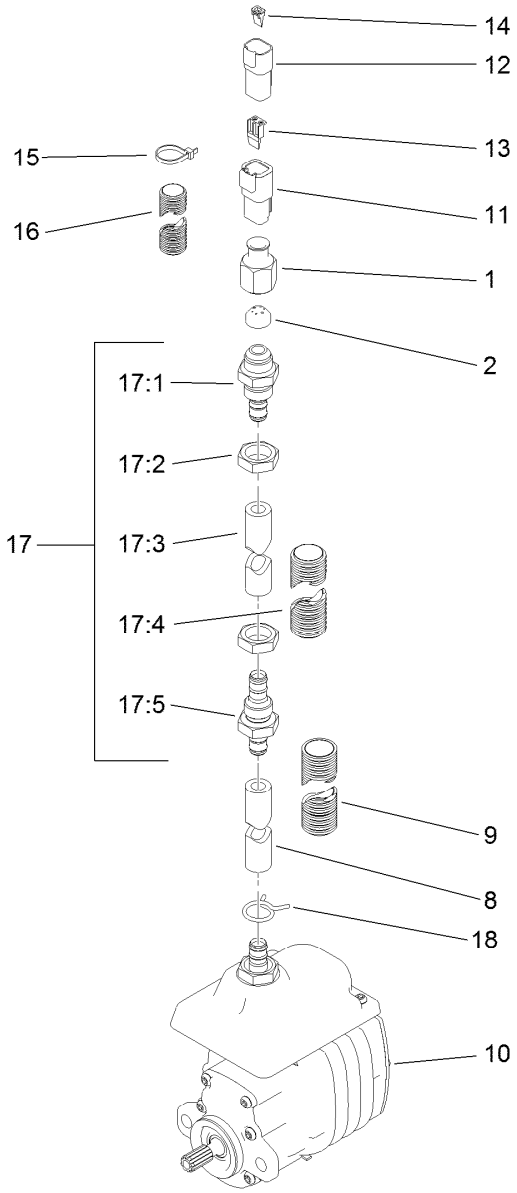

Electric Reel Motor Assembly No. 138-8905

Ref.	Part Number	Qty.	Description
1	119-7481	1	Nut-Ferrule
2	119-7480	1	Ferrule
8	119-7476	1	Hose
9	119-7558	1	Tubing-Convoluted, Slit
10		1	Motor-Electric ●
11	32160-245	1	Connector
12	32160-315	1	Connector
13	32180-083	1	Wedge
14	32180-084	1	Wedge

Ref.	Part Number	Qty.	Description
15	3290-378	4	Tie-Cable
16	120-3223	1	Tubing-Convoluted, Slit
17	120-4532	1	Hose ASM
17:1	119-7545	1	Fitting-Bulkhead
17:2	119-7457	2	Nut
17:3	119-7524	1	Hose
17:4	119-7559	1	Tubing-Convoluted, Slit
17:5	119-7544	1	Fitting-Bulkhead
18	138-8924	1	Clamp-Hose

● Not serviced separately

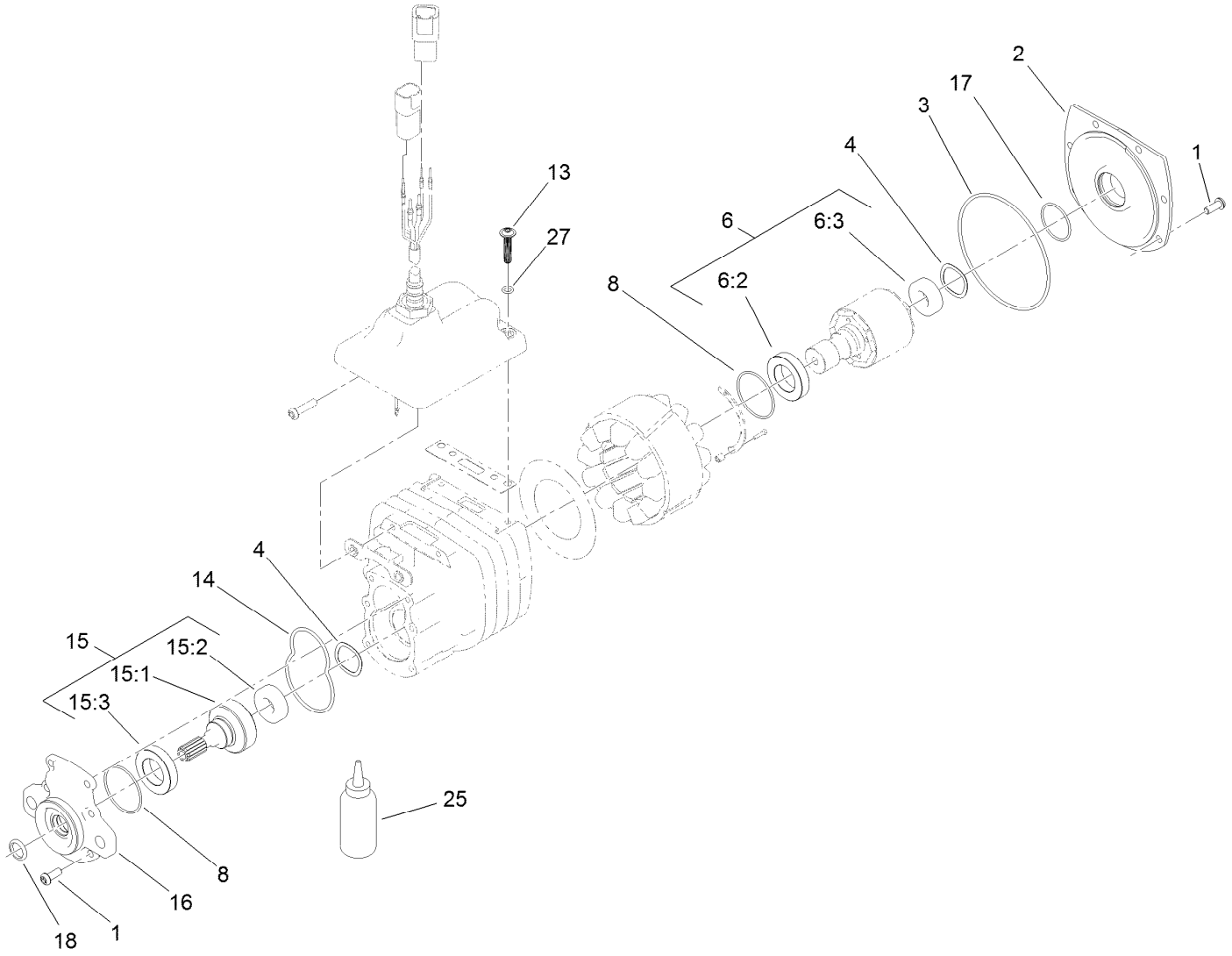

Electric Motor Assembly

Ref.	Part Number	Qty.	Description
1	120-4559	12	Screw-BHCS
2	115-4779	1	Cover-Motor
3	112-9609	1	O-Ring
4	112-5163	2	Washer-Wave
6	119-7450	1	Rotor ASM
6:2	112-5158	1	Bearing-Ball
6:3	120-4557	1	Bearing
8	112-9616	2	O-Ring
13	138-8918	2	Screw-Fbhcs
14	112-9611	1	O-Ring

Ref.	Part Number	Qty.	Description
15	115-4782	1	Output Gear ASM
15:1	112-5153	1	Gear-Output
15:2	120-4557	1	Bearing
15:3	112-5158	1	Bearing-Ball
16	115-4777	1	Cover-Gearbox
17	119-1156	1	O-Ring
18	119-7451	1	Seal-Oil
25	136-8595	1	Grease-Synthetic
27	138-8916	2	O-Ring

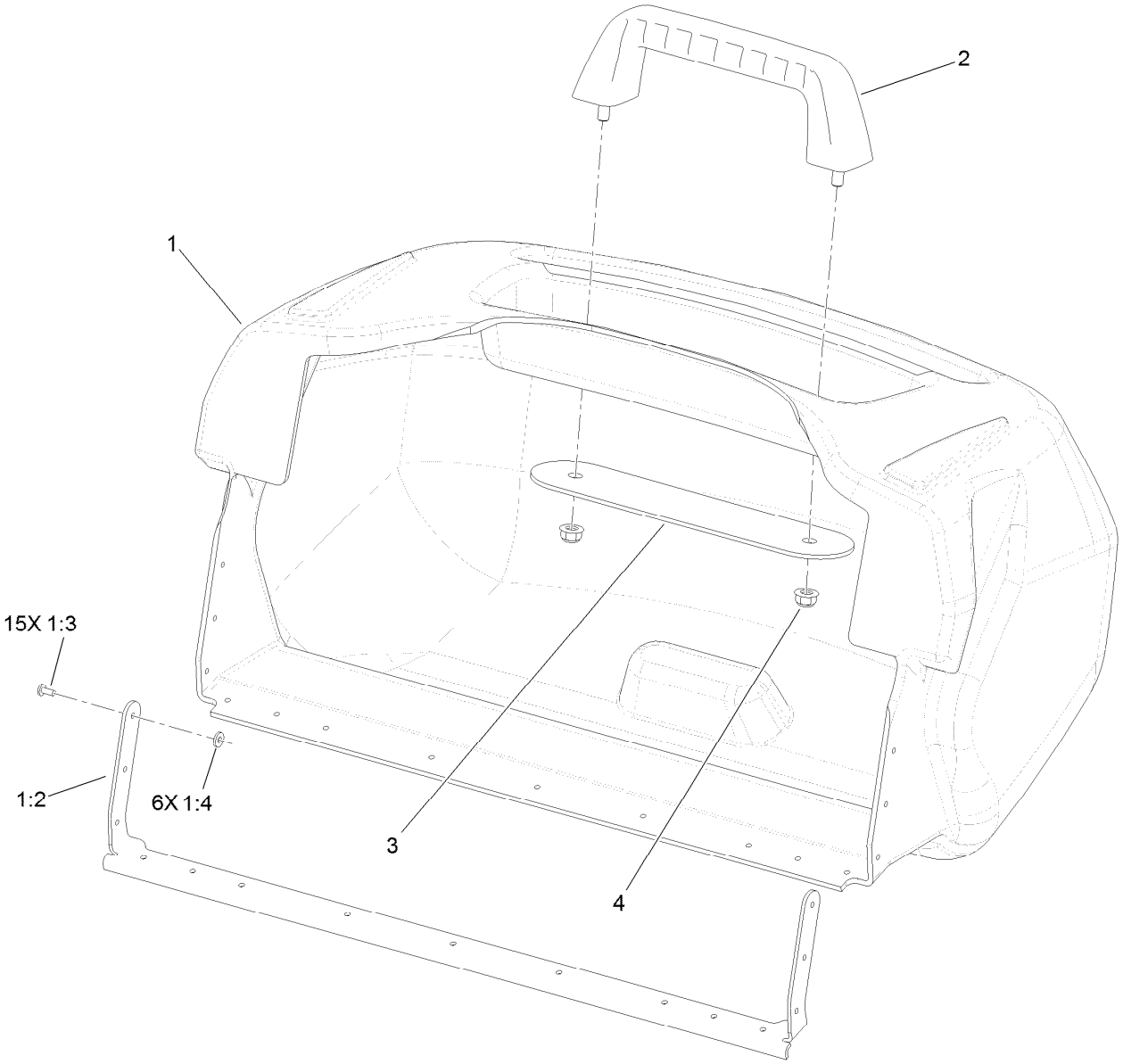

Basket Assembly No. 132-9599

Ref.	Part Number	Qty.	Description
1	132-9510	1	Basket Assembly
1:2	132-3806	1	Support-Basket
1:3	3269-25	15	Rivet-Pop
1:4	3256-75	6	Washer-Flat
2	117-8088	1	Handle-Grab
3	117-8092-03	1	Plate-Mounting
4	104-8300	2	Nut-HF, NI

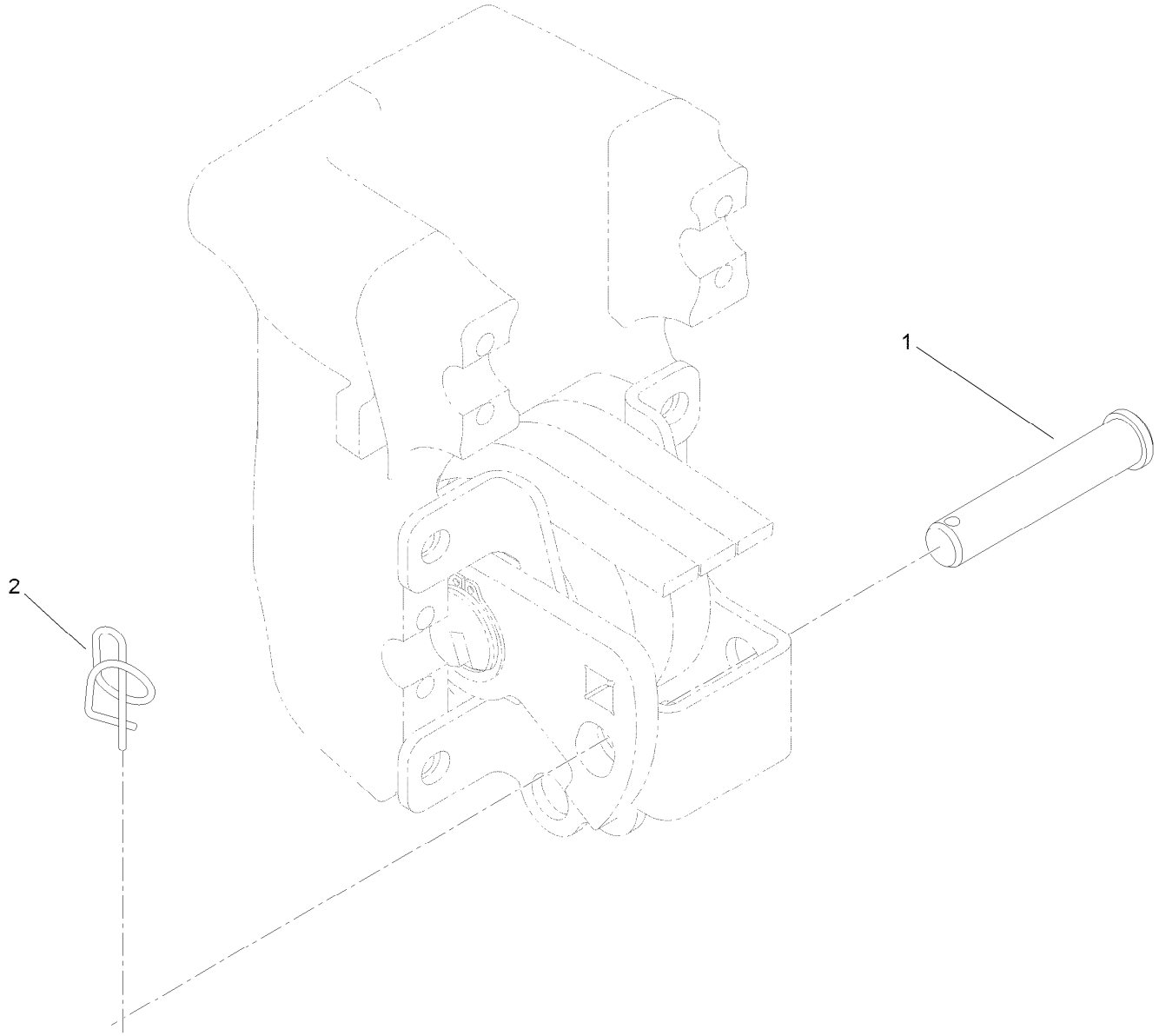

Suspension Pin Position Assembly

Ref.	Part Number	Qty.	Description
1	100-6541	3	Pin-Clevis
2	112-1491	3	Pin-Cotter

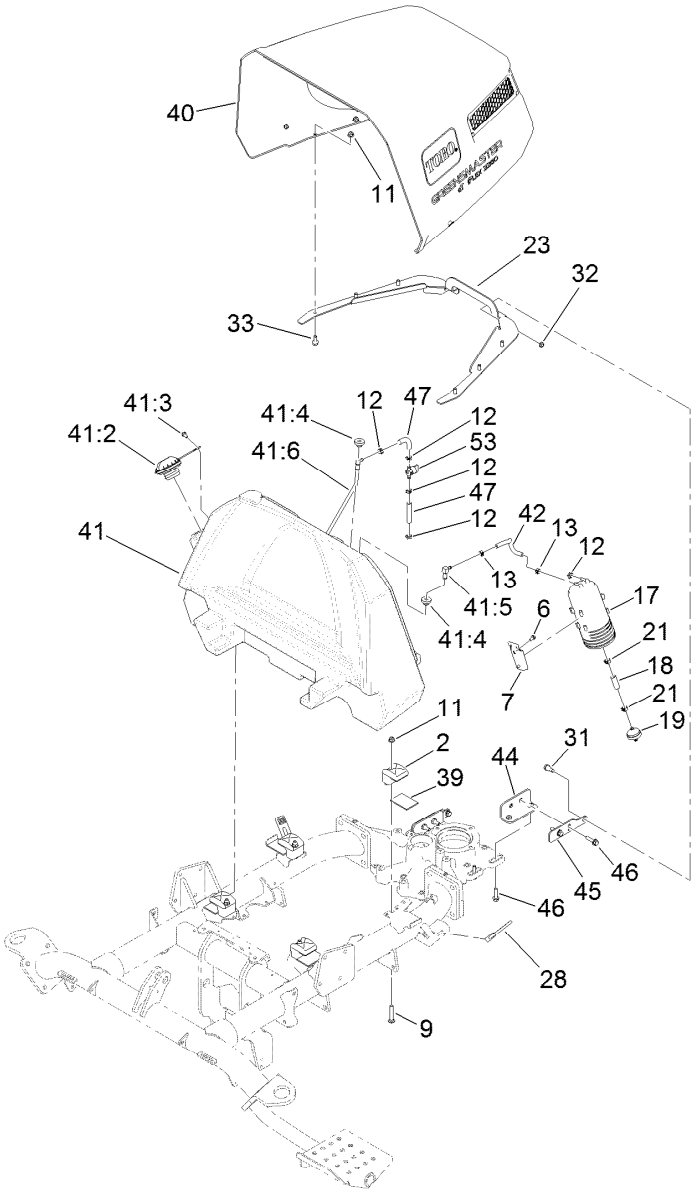

Fuel Tank and Hood Assembly

Ref.	Part Number	Qty.	Description
2	107-4543	4	Clamp
6	32144-4	2	Screw-HWH
7	114-0292	1	Bracket-Canister, Carbon
9	3230-6	4	Bolt-CARR
11	104-8300	10	Nut-HF, NI
12	2412-98	5	Clamp-Hose
13	2412-146	2	Clamp-Hose
17	117-1221	1	Canister-Carbon, 800Cc
18	106-5317	1	Hose-Fuel
19	115-7854	1	Filter-Fuel, Inline
21	92-2379	2	Clamp-Hose
23	137-2193-03	1	Bracket-Hinge, Shroud
28	131-8402	2	Strap-Down, Hold
31	115-1958	2	Bolt-Shoulder
32	99-6007	2	Nut-Lock, NI

Ref.	Part Number	Qty.	Description
33	3234-47	6	Screw-HHF
39	136-4259	4	Foam-Strip, Tank
40	139-8316	1	Engine Hood ASM
41	137-8108	1	Fuel Tank ASM
41:2	117-1722	1	Cap-Fuel
41:3	32144-4	1	Screw-HWH
41:4	46-6560	2	Bushing
41:5	116-2288	1	Fitting-Elbow, 90 DEG
41:6	132-9905	1	Pipe-Stand
42	51-3210	1	Hose-Fuel
44	137-2242-03	2	Bracket-Hood
45	137-7914	2	Bracket-Hood
46	119-4036	8	Screw-HHF
47	109-0304	2	Hose-Fuel
53	1-603770	1	Valve-Fuel

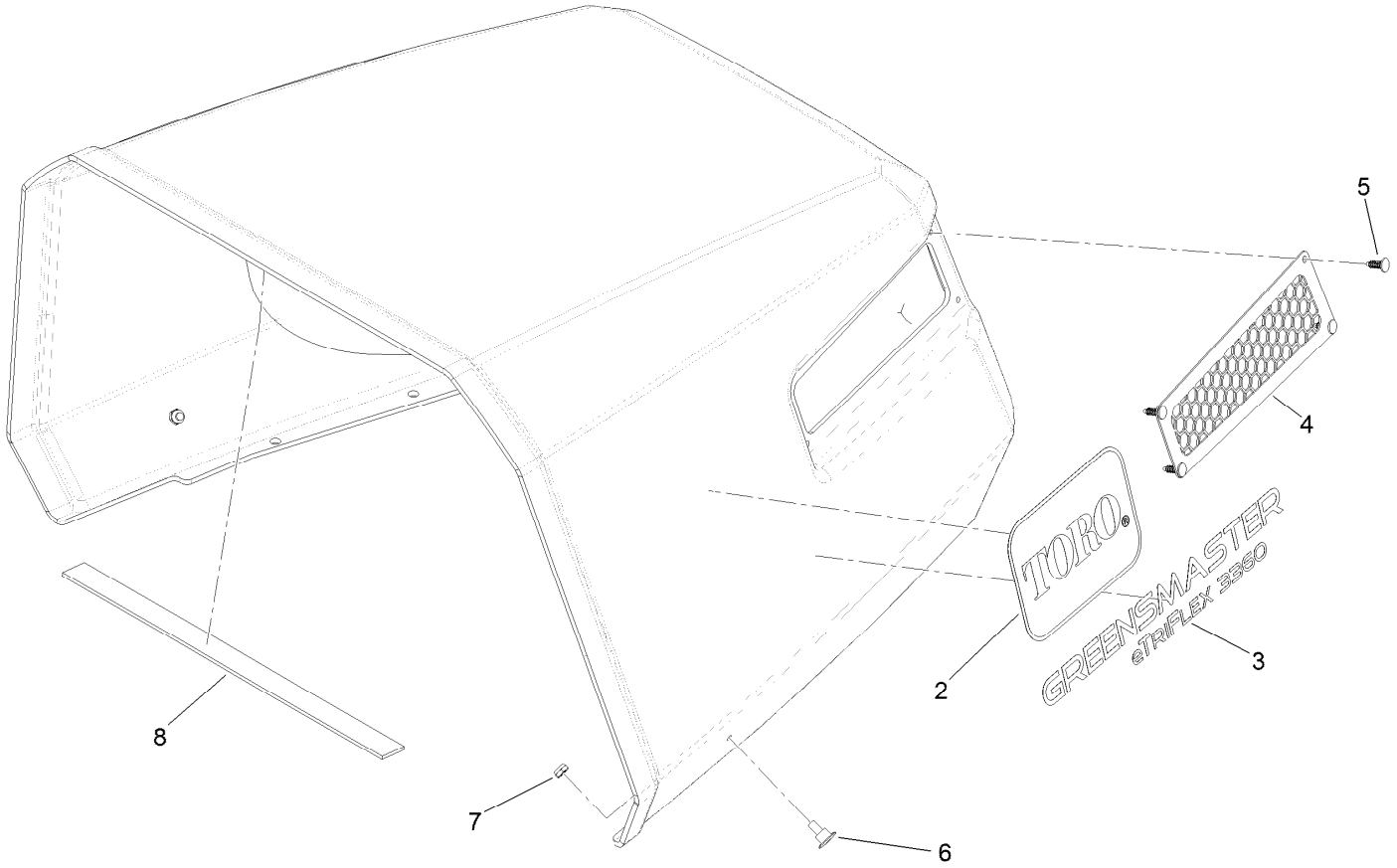

Hood Assembly No. 139-8316

Ref.	Part Number	Qty.	Description
2	62-5550	2	Decal
3	137-7827	2	Decal
4	137-7911-03	2	Screen
5	120-6737	8	Plug-Plastic
6	125-1122	2	Screw
7	3296-56	2	Nut-Lock, NI
8	137-8082	1	Strip-Foam

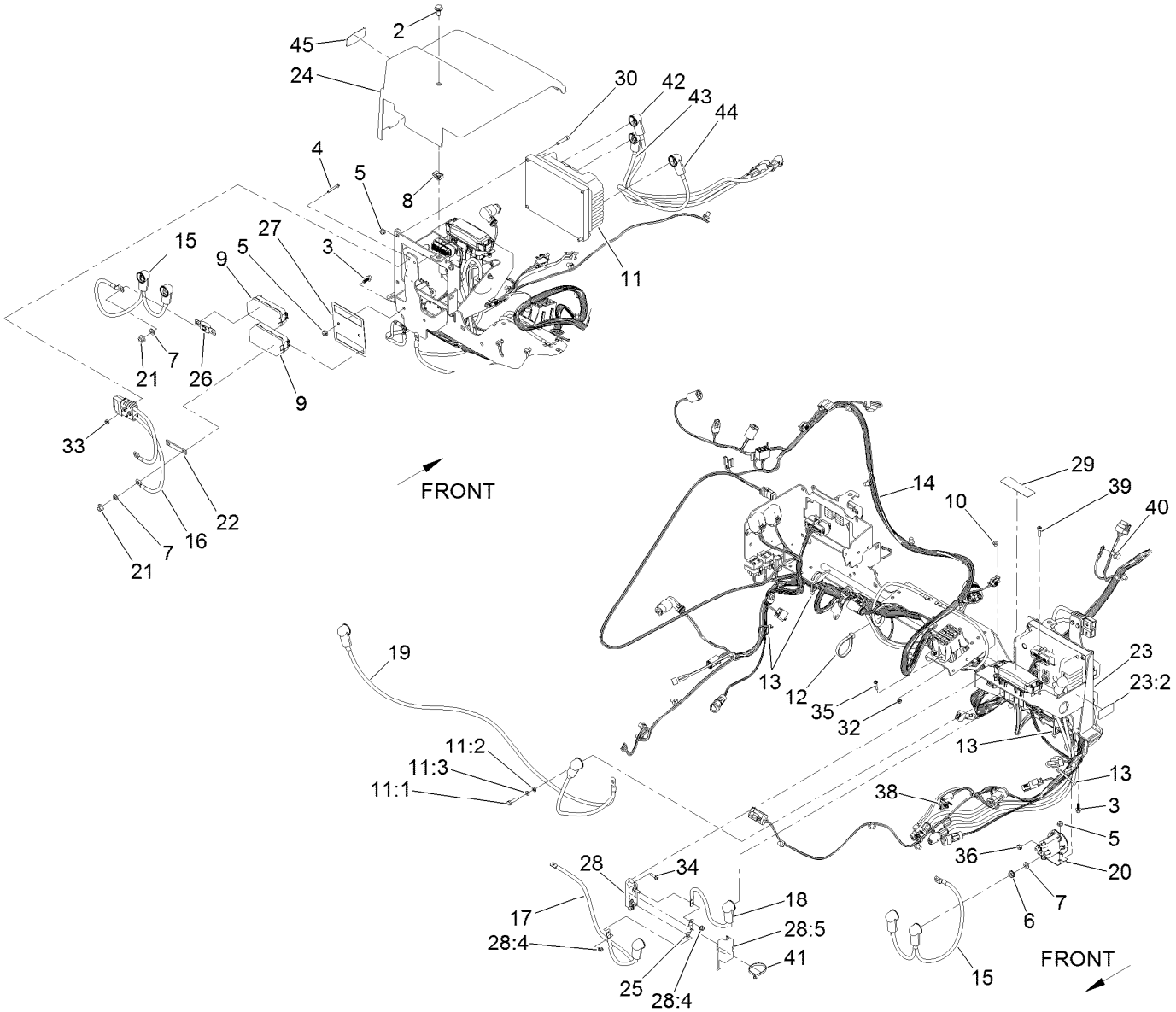

Electrical Assembly

Ref.	Part Number	Qty.	Description
2	19-1470	1	Screw-Shoulder
3	99-6810	6	Screw-HHF
4	100-4352	2	Screw-HWH
5	104-7201	10	Nut-HF, NI
6	107-0380	4	Nut-HHF
7	107-0394	8	Washer-Flat
8	112-3306	1	Nut
9	114-3318	2	Holder-Fuse, Mega
10	120-4578	2	Nut-HF
11	120-4780	1	Controller-Motor, Traction
11:1	33113-030	5	Screw-HH
11:2	33093-00	5	Washer-Flat
11:3	43-5930	5	Washer-Lock, Spring
12	3334-945	3	Tie-Cable
13	3290-379	4	Tie-Cable
14	122-1619	1	Harness-Wire
15	122-1106	1	Positive Battery Cable Assembly
16	122-1107	1	Positive And Negative Battery Cable ASM
17	122-1108	1	Cable-Battery, Positive

Ref.	Part Number	Qty.	Description
18	122-1112	1	Cable-Battery, Positive
19	122-1115	1	Cable-Battery, Negative
20	122-1274	2	Contactor-DC, 48V
21	127-2371	4	Nut-HF
22	132-9815	1	Strap-Jumper
23	137-8196	1	Bracket-Components
23:2	137-8127	2	Decal-No Spray
24	133-0094	1	Cover-LH
25	137-7707	1	Fuse-60 Amp
26	137-7722	1	Fuse-150 Amp
27	137-7835	1	Bracket-Fuses
28	137-7861	1	Fuse Block ASM
28:4	120-4580	2	Nut-HF
28:5	137-7863	1	Cover-Fuse
29	137-8037	1	Decal-Fuses, Cutting Unit
30	3274-51	4	Screw-HSH
32	3296-1	4	Nut-Lock
33	3296-2	2	Nut-Lock, NI
34	32105-13	2	Screw-HWH
35	32105-29	4	Screw-SHWH
36	32149-8	4	Nut-Keps

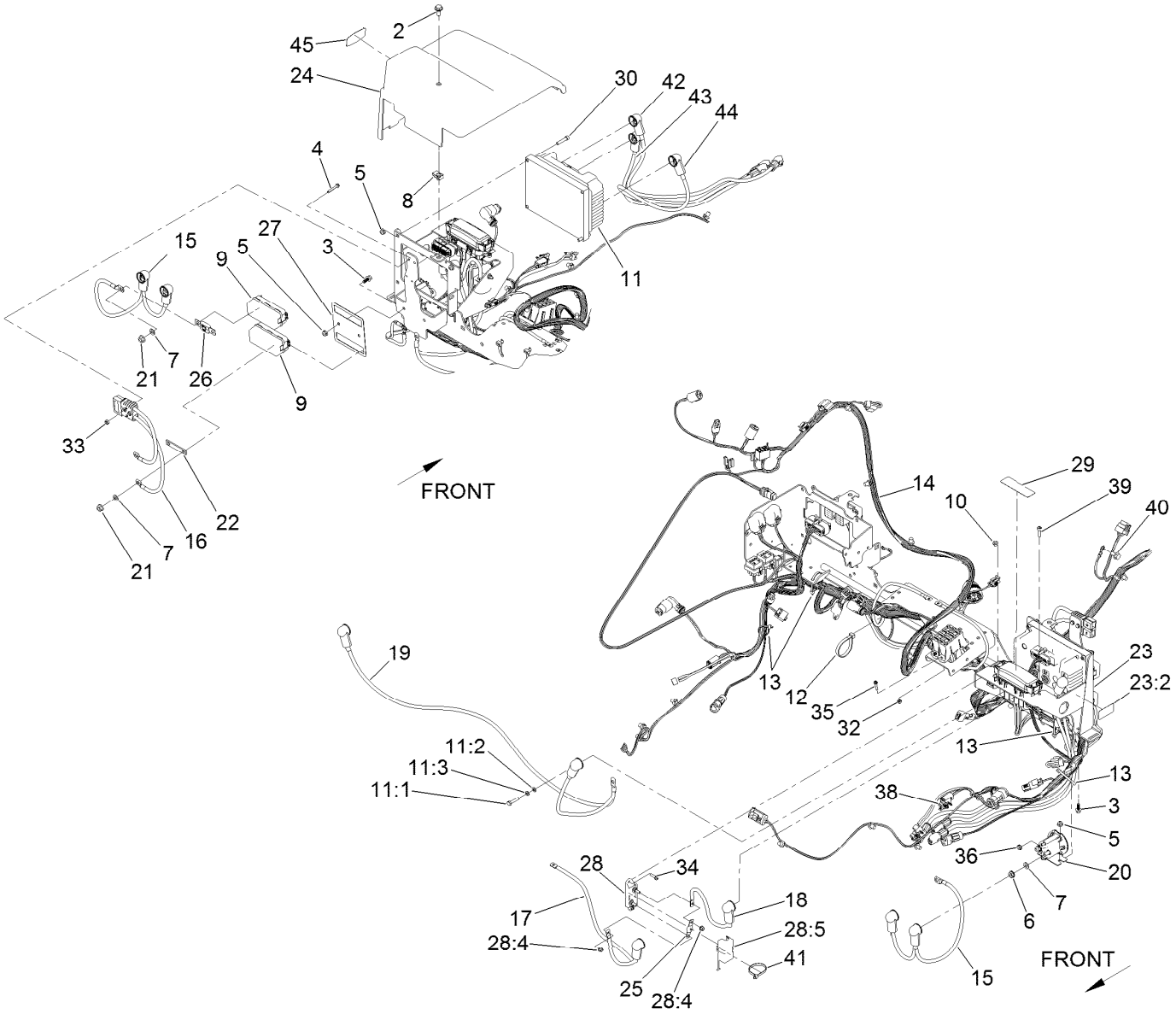

Electrical Assembly (continued)

Ref.	Part Number	Qty.	Description
38	32180-103	2	Clip-Connector
39	52-6290	2	Screw-HSH
40	33104-016	1	Screw-HHF
41	3290-378	1	Tie-Cable

Ref.	Part Number	Qty.	Description
42	122-1611	1	Cable-Battery, Positive
43	122-1612	1	Cable-Battery, Positive
44	122-1613	1	Cable-Battery, Positive
45	119-7580	1	Decal-Smart, Energy

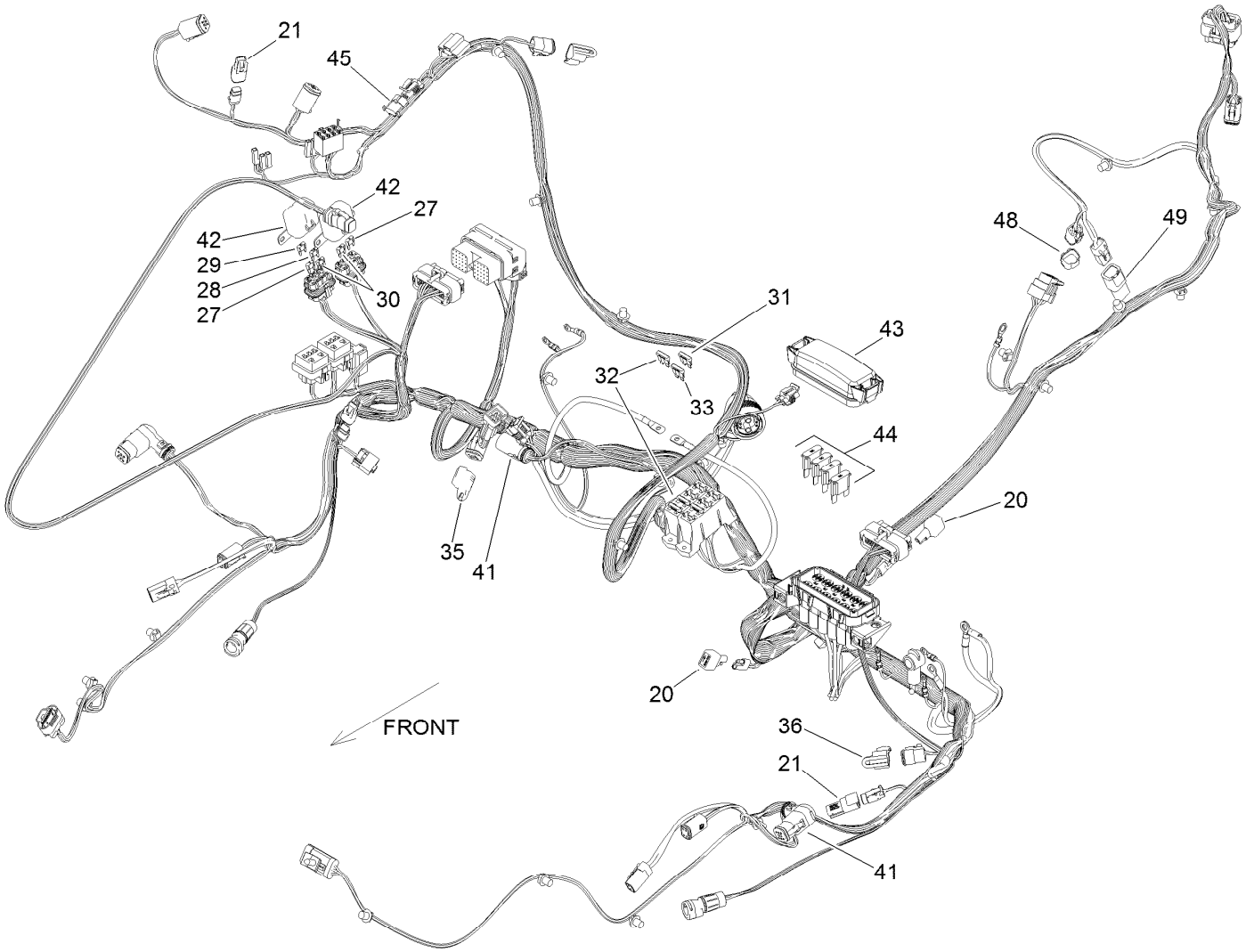

Wire Harness Assembly No. 122-1619

Ref.	Part Number	Qty.	Description
20	100-4918	2	Diode
21	32180-282	4	Resistor-120 Ohm
27	121-8861	2	Fuse-Mini Blade, 2 Amp
28	121-8865	1	Fuse-Mini Blade, 7.5 Amp
29	121-8866	1	Fuse-Mini Blade, 10 Amp
30	121-8867	2	Fuse-Mini Blade, 15 Amp
31	117-4722	1	Fuse-Blade, 5A
32	117-4724	4	Fuse-Blade, 10A
33	117-4728	1	Fuse-Blade, 30A
35	32180-156	1	Cap-Plug, 6 Way

Ref.	Part Number	Qty.	Description
36	32180-089	2	Cap-Plug, 3 Way
41	32180-090	3	Backshell-Deutsch, Dt06-06S 90 DEG
42	32180-179	2	Cover-Bussman
43	32180-146	1	Cover-Fuse
44	122-0255	3	Fuse-Maxi, 35 Amp-58V
45	32180-056	1	Cap
48	32180-260	1	Cap-Deutsch, Dust, 4 Way
49	32160-245	1	Connector

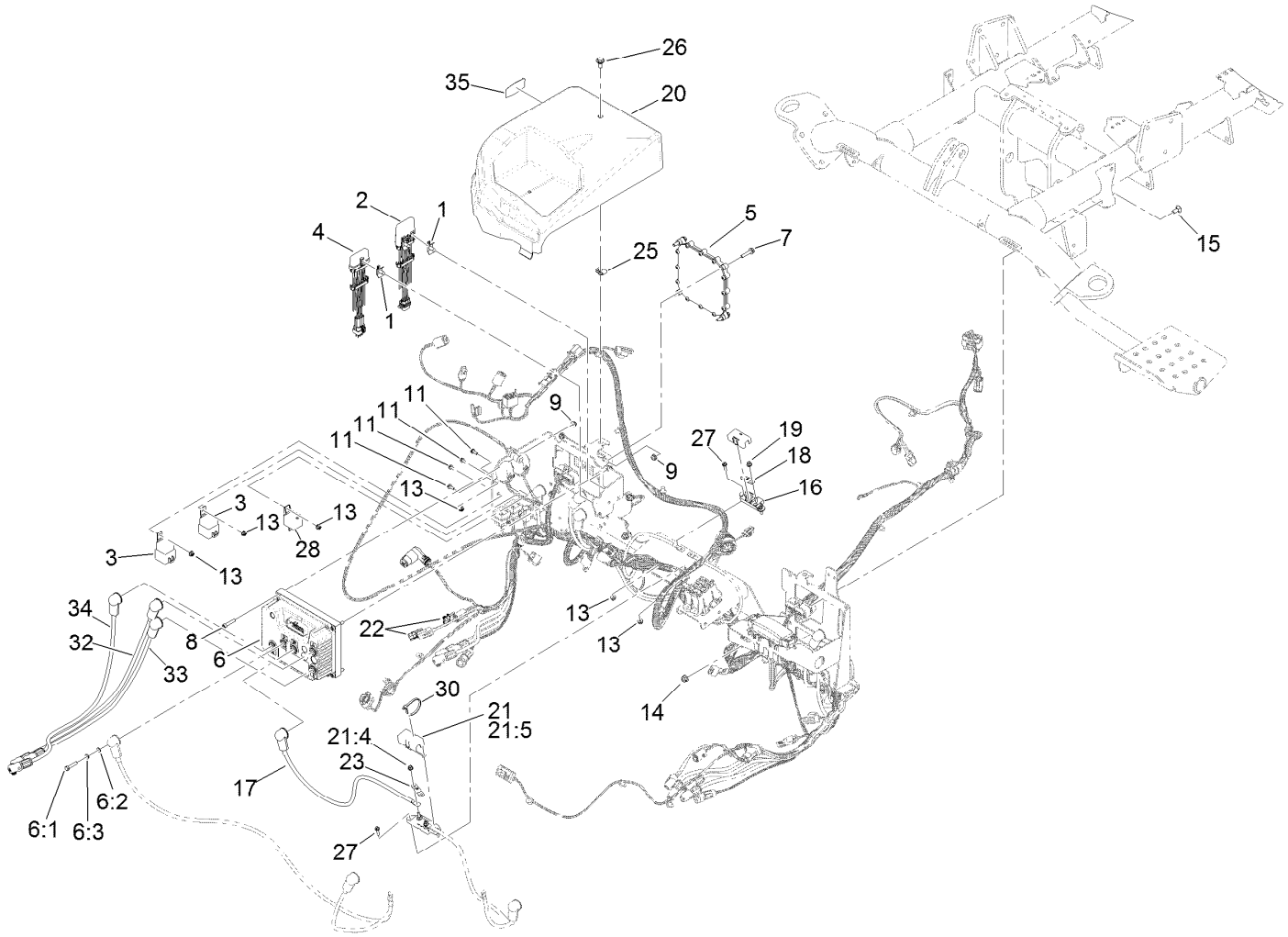

Controller Assembly

Ref.	Part Number	Qty.	Description
1	32180-011	3	Clip-Connector
2	119-4330	1	Isolated Can Module ASM
3	99-7430	2	Relay-Mini
4	112-9630	1	Module-Reel, I.D.
5	127-2770	1	Controller
6	120-4780	1	Controller-Motor, Traction
6:1	33113-030	5	Screw-HH
6:2	33093-00	5	Washer-Flat
6:3	43-5930	5	Washer-Lock, Spring
7	127-8639	4	Screw-HHF
8	3274-51	4	Screw-HSH
9	104-7201	8	Nut-HF, NI
11	32105-23	7	Screw
13	120-4578	11	Nut-HF
14	104-8300	4	Nut-HF, NI
15	3230-1	4	Bolt-CARR
16	132-9796	1	Fuse-Holder, Midi Fuse
17	122-1110	1	Cable-Battery, Positive

Ref.	Part Number	Qty.	Description
18	137-7708	1	Fuse-100 Amp
19	120-4580	2	Nut-HF
20	133-0095	1	Cover-RH
21	137-7861	1	Fuse Block ASM
21:4	120-4580	2	Nut-HF
21:5	137-7863	1	Cover-Fuse
22	32180-103	2	Clip-Connector
23	137-7707	1	Fuse-60 Amp
25	112-3306	1	Nut
26	19-1470	1	Screw-Shoulder
27	32105-13	4	Screw-HWH
28	122-1487	1	Relay
30	3290-378	5	Tie-Cable
32	122-1614	1	Cable-Battery, Positive ASM
33	122-1615	1	Cable-Battery, Positive ASM
34	122-1616	1	Cable-Battery, Positive ASM
35	119-7580	1	Decal-Smart, Energy

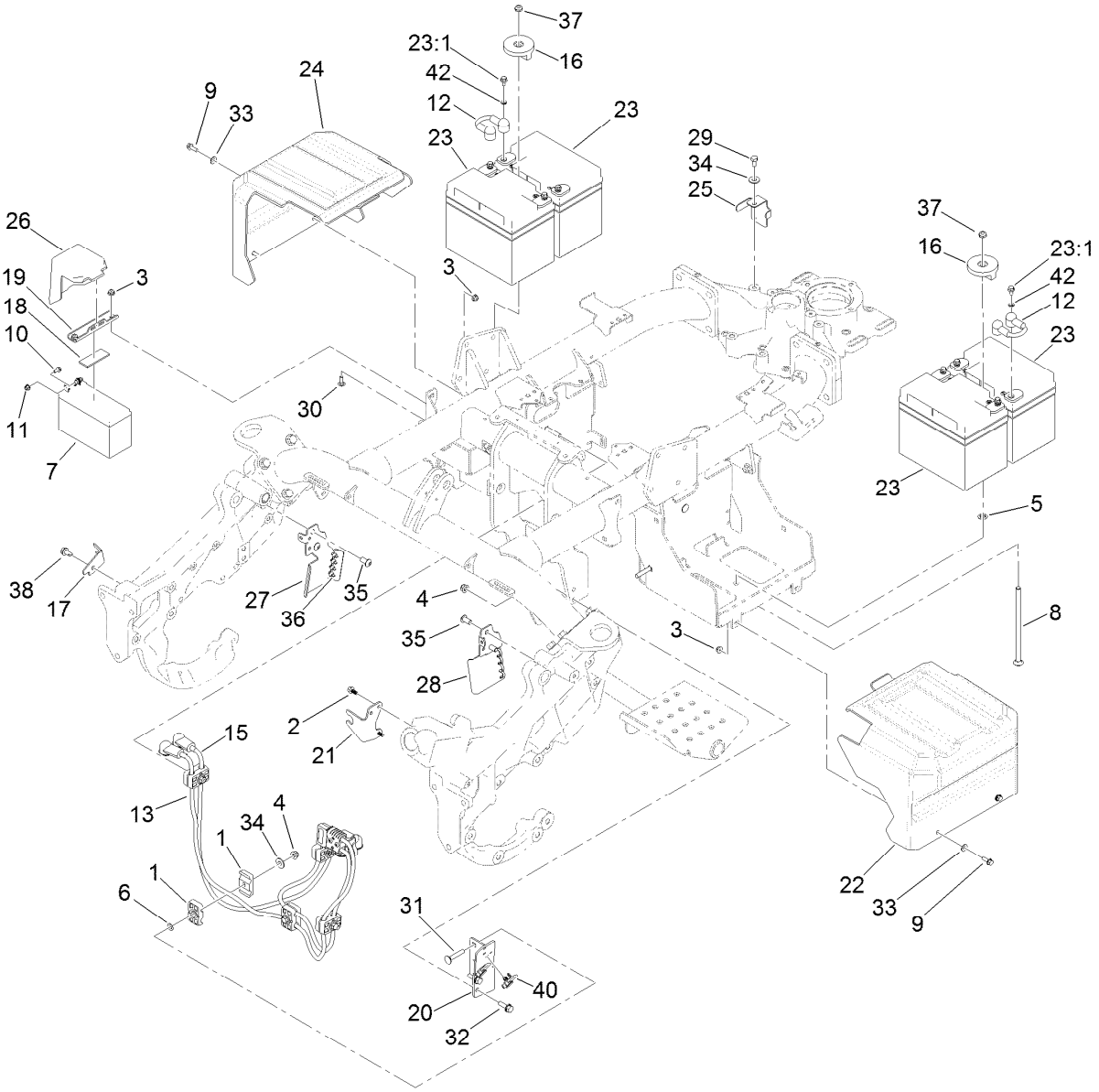

Battery Assembly

Ref.	Part Number	Qty.	Description
1	56-7976	10	Clamp-Tube
2	99-6810	2	Screw-HHF
3	104-7201	6	Nut-HF, NI
4	104-8300	7	Nut-HF, NI
5	107-3154	2	Nut-Push
6	109-5667	5	Nut-Push
7	112-9621	1	Battery-Nonspillable
8	117-1399	2	Bolt-Carriage
9	32105-15	4	Screw-HWH
10	120-4579	2	Screw-HHF
11	120-4580	2	Nut-HF
12	122-1105	2	Positive Battery Cable ASM
13	122-1113	1	Positive And Negative Battery Cable ASM
15	122-1381	1	Positive Battery Cable ASM
16	127-2393	2	Hold Down-Battery
17	132-9982	1	Bracket-Hose
18	133-0081	1	Strip-Foam
19	133-0082	1	Channel-Clamp, Battery
20	133-0083-03	1	Bracket-Hose, Rear
21	136-2697	1	Bracket-Hose

Ref.	Part Number	Qty.	Description
22	137-7711	1	Cover-Battery
23	137-7734	4	Battery-12V (33 Ah)
23:1	33113-012	2	Screw-HH
24	137-7849	1	Cover-Battery, RH
25	137-7859	1	Bracket-Harness
26	137-7867	1	Cover-Battery
27	137-7905-01	1	Bracket-Harness, RH
28	137-7906-01	1	Bracket-Harness, LH
29	3210-2	1	Screw-HH
30	3229-1	2	Screw-CARR
31	3230-5	5	Bolt-CARR
32	3234-29	2	Screw-HHF
33	3256-1	4	Washer-Flat
34	3256-3	6	Washer-Flat
35	3274-80	4	Screw-HH
36	3290-378	8	Tie-Cable
37	3296-59	2	Nut-Lock, NI
38	32104-32	1	Screw-HWH
40	32180-103	2	Clip-Connector
42	43-5930	8	Washer-Lock, Spring

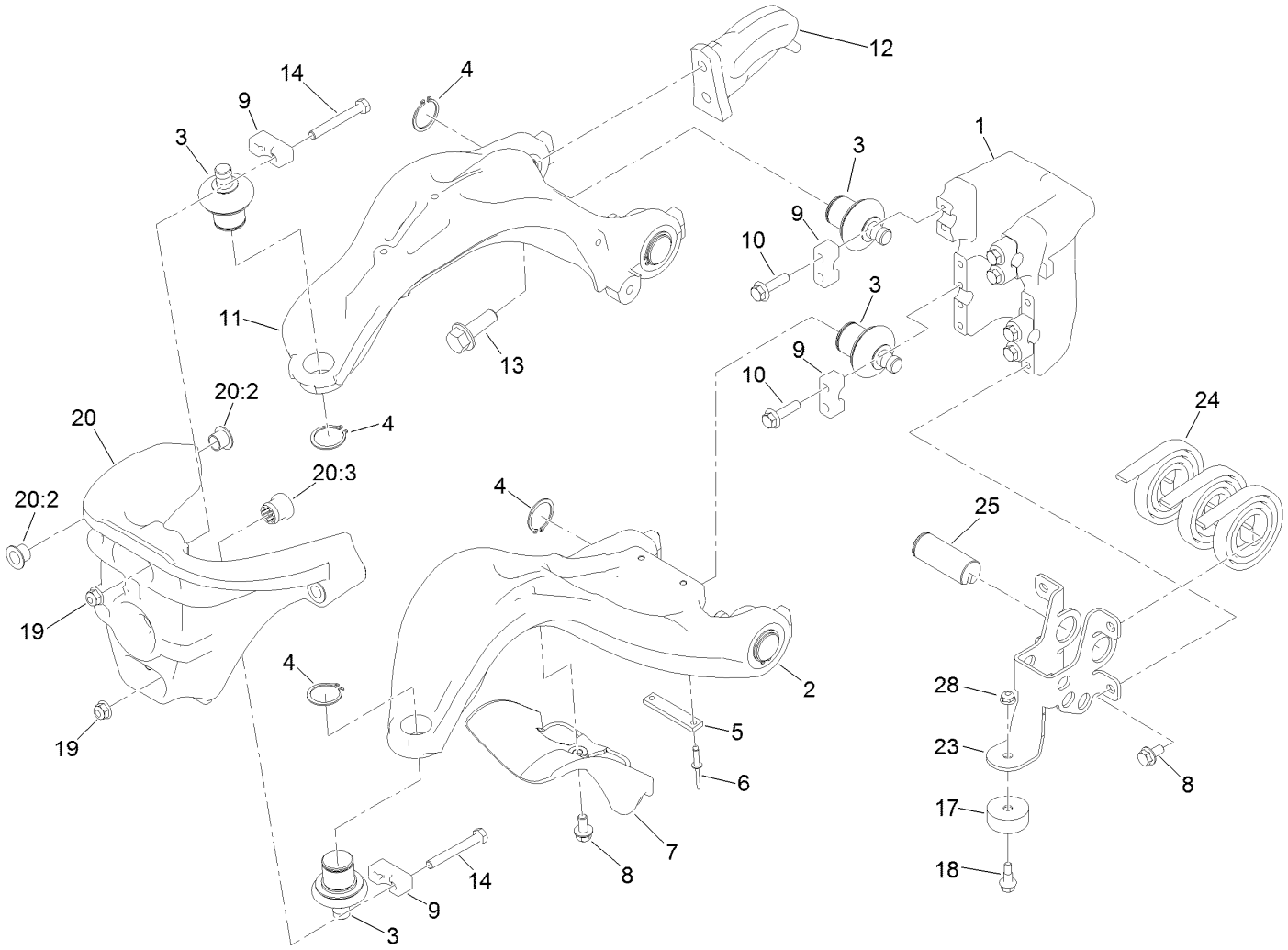

Suspension A-Arm Assembly

Ref.	Part Number	Qty.	Description
1	117-9480	1	Mount-Pivot, A-Arms
2	117-6656	1	A-Arm, Lower
3	132-6959	6	Balljoint
4	120-3225	6	Ring-Retaining, EXT
5	117-6674	1	Plate-Striker
6	3269-28	2	Rivet-Pop
7	117-6755	1	Stop-Steering
8	114-7728	5	Screw-HF
9	112-5647	6	Clamp
10	132-3837	8	Screw-HHF
11	139-6452	1	A-Arm, Upper
12	117-6650	1	Plate-Lift

Ref.	Part Number	Qty.	Description
13	100-6116	2	Screw-HHF
14	132-3838	4	Screw-HH
17	133-0308	1	Bumper-Rubber
18	133-0315	1	Screw-Shoulder, HF
19	104-8300	4	Nut-HF, NI
20	120-3216	1	Steering Head ASM
20:2	125-5239	4	Bushing-Flange
20:3	131-1836	1	Grommet
23	133-8999	1	C-Balance Mount
24	114-9306	3	Spring
25	131-4402	1	Tensioner
28	104-7201	1	Nut-HF, NI

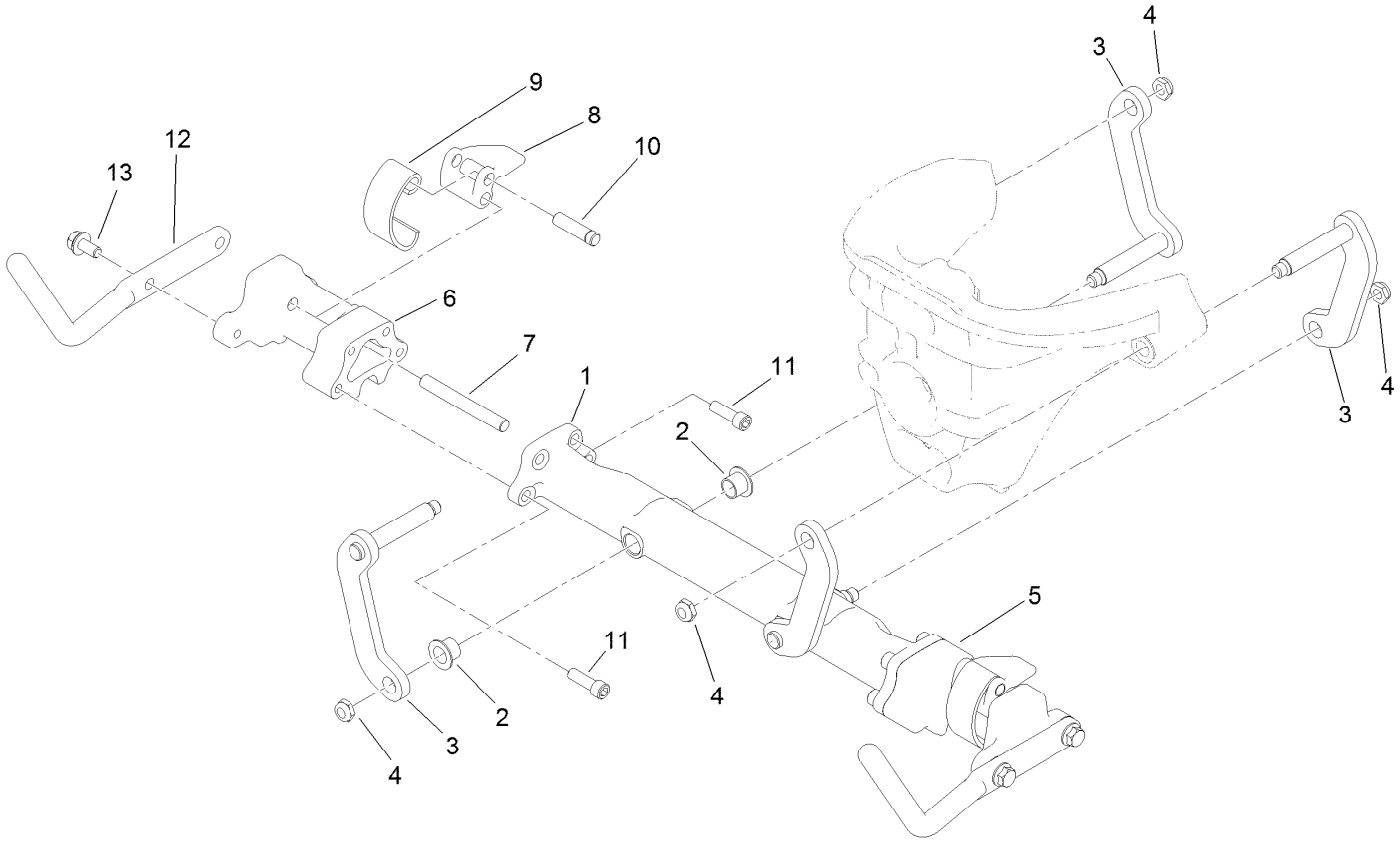

Suspension Crossarm Assembly

Ref.	*Part Number*	*Qty.*	*Description*
1	120-3217	1	Crossarm
2	125-5239	4	Bushing-Flange
3	117-6654	4	Link
4	3296-59	4	Nut-Lock, NI
5	117-9482	1	Mount-Cross Arm, LH
6	117-9492	1	Mount-Cross Arm, RH
7	114-8051	2	Pin-Pivot
8	114-8047	2	Lever
9	114-8048	2	Spring
10	114-8049	2	Pin-Pivot
11	120-3227	8	Screw-HSH
12	120-2784-01	2	Horn-Basket
13	114-7728	4	Screw-HF

Attachments and Accessories

For 04580 Greensmaster 3360 eTriFlex Traction Unit

Product Name	Model/Part
Turf Evaluator	04399
Light Kit	04500
Standard Greensmower Seat Kit	04508
8-Blade DPA Reel Mower	04651
11-Blade DPA Reel Mower	04653
14-Blade DPA Reel Mower	04655
Anti-Bobbing Kit	04716
Dethatching Unit	04720
Tri-Roller	04722
Spiker	04723
Premium Seat	04729
Wireless Hourmeter	115-4754
Premium Armrest Kit	119-7105
Weight Kit	119-7129
Armrest Kit	121-3660
Rear Light Kit	137-7945
Front Light Mount Kit	137-7947
Spark Arrestor, 1.25 I.D.	137-8098
Bag Kit	137-8130
Bimini Shade Kit	138-8579
400 Hour MVP Kit	44971
Height-of-Cut Bar	94-9010
Tire-TURFMATE	99-4506

Notes:

Notes:

TORO®

Count on it.