Form No. 3395-592 Rev D

TORO®

Count on it.

Parts Catalog

Reelmaster® 3550

Traction Unit

Model No. 03910—Serial No. 313000001 and Up

Register at www.Toro.com.
Original Instructions (EN)

CE

3395-592 D

Ordering Replacement Parts

To order replacement parts, please supply the part number, the quantity, and the description of each part desired.

Understanding Reference Numbers

Each identified part in an illustration has a reference number. The reference number for a part also appears in the parts list, along with other information about the part.

This catalog uses two special reference number formats, one to indicate parts in a service assembly and another to indicate the quantity of a given part in an illustration.

Service Assembly Reference Numbers

Parts in service assemblies have reference numbers in the form a:b. The a represents the reference number of the entire service assembly and the b represents a sequential number unique to each part within the service assembly.

For example, a wheel assembly might be identified by reference number 6, the tire by 6:1, the valve by 6:2, and the wheel by 6:3. When you order the assembly identified by reference number 6, you receive all parts identified by reference numbers 6:1,6:2, and 6:3. However, you may also order any part individually. Reference numbers of this type appear in illustration and in parts lists.

Reference Numbers Indicating Quantity

In an illustration, if a reference number indicates more than one part, the reference number has the form nX y. The n represents the quantity of the part, the X is the multiplication symbol, and the y represents the reference number.

For example, in an illustration, the reference number 2X 37 means that two of the parts identified by reference number 37 are indicated.

Contents

Frame Assembly . . . 5
Engine Mount Assembly . . . 6
Engine Muffler and Air Cleaner Assembly . . . 7
Air Cleaner Assembly No. 93-2190 . . . 8
Radiator and Oil Cooler Assembly . . . 9
No. 1, No. 4 and No. 5 Lift Arm Assembly . . . 10
Hydraulic Cylinder Assembly No. 119-6988 . . . 11
Hydraulic Cylinder Assembly No. 120-9980 . . . 12
No. 2 and No. 3 Lift Arm Assembly . . . 13
Fuel Tank and Filter Assembly . . . 14
Hydraulic Tank and Filter Assembly . . . 15
Battery Assembly . . . 16
Seat and Heat-Shield Assembly . . . 17
Seat Assembly No. 116-3998 . . . 18
Control Panel Assembly . . . 19
Joystick Bracket Assembly No. 120-5280 . . . 20
Parking Brake Assembly . . . 21
Main Wire Harness Assembly . . . 22
Steering Arm Assembly . . . 23
Steering Valve Assembly No. 121-7856 . . . 24
Front Shroud and Floorplate Assembly . . . 25
Lamp Assembly No. 94-9024 . . . 26
Traction Control Assembly . . . 27
Hood and Screen Assembly . . . 28
Wheel and Brake Assembly . . . 29
Hydraulic Motor Assembly No. 110-8785 . . . 30
Hydraulic Motor Assembly No. 110-8786 . . . 31
Brake Assembly No. 104-7705 . . . 32
Rear Fork and Casting Assembly . . . 33
Steering Cylinder Assembly No. 121-7835 . . . 34
Hydraulic Motor Assembly No. 95-8694 . . . 35
Neutral Arm Assembly . . . 36
Piston Pump and Gear Pump Assembly . . . 37
Hydraulic Pump Assembly No. 104-4890 . . . 38
Hydraulic Gear Pump Assembly No. 121-7841 . . . 40
Traction Hydraulic Assembly . . . 41
Lift Manifold and Steering Circuit Assembly . . . 42
Lift Manifold Assembly No. 120-2057 . . . 43
Front Mow Hydraulic Circuit Assembly . . . 44
Mow Manifold Assembly No. 120-2058 . . . 46
Hydraulic Reel Motor Assembly No. 120-2072 . . . 47
Rear Hydraulic Mow Ciruit Assembly . . . 48
Crankcase Assembly . . . 50
Oil Pan and Dipstick Assembly . . . 51
Cylinder Head Assembly . . . 52
Gear Case and Oil Filter Cartridge Assembly . . . 53
Cylinder Head Cover Assembly . . . 54
Main Bearing Case Assembly . . . 55
Camshaft and Idle Gear Shaft Assembly . . . 56
Piston and Crankshaft Assembly . . . 57
Fuel Camshaft and Governor Shaft Assembly . . . 58
Idle Apparatus and Stop Solenoid Assembly . . . 59
Injection Pump Assembly . . . 60
Governor Assembly . . . 61

© 2021—The Toro® Company

8111 Lyndale Avenue South
Bloomington, MN 55420

Contact us at www.Toro.com.
Printed in the USA.

All Rights Reserved

Contents (continued)

Speed Control Plate Assembly . . . 62
Nozzle Holder and Glow Plug Assembly . . . 63
Nozzle Holder Assembly . . . 64
Alternator, Pulley and Fan Assembly . . . 65
Alternator Components Assembly . . . 66
Starter and Flywheel Assembly . . . 67
Starter Component Assembly . . . 68
Water Flange and Thermostat Assembly . . . 69
Water Pump Assembly . . . 70
Valve and Rocker Arm Assembly . . . 71
Inlet and Exhaust Manifold Assembly . . . 72
Miscellaneous Engine Parts . . . 73
Attachments and Accessories . . . 74

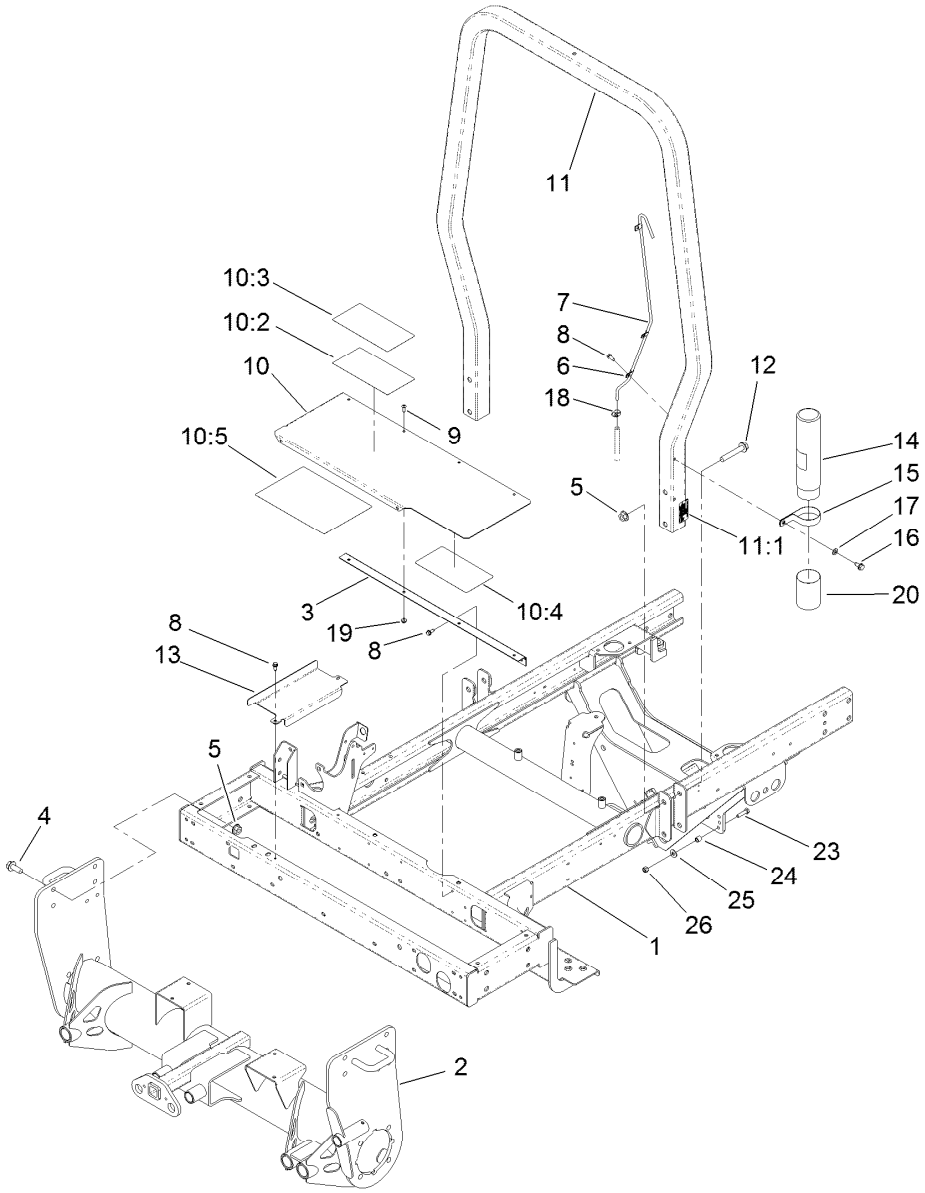

Frame Assembly

Ref.	Part Number	Qty.	Description
1	120-2142-03	1	Frame
2	121-7870-03	1	Axle-Front
3	121-7921	1	Hinge
4	3234-38	8	Screw-HHF
5	32128-49	12	Nut-HHF
6	2412-72	3	Clip-Closed, Insulated
7	95-8615	1	Tube-Breather
8	32144-10	8	Screw-HWH
9	119-6906	4	Screw-HSBH
10	121-7846	1	Toolbox Cover ASM
10:2	120-1683	1	Decal-Danger
10:3	121-7928	1	Decal-Danger, CE
10:4	121-7884	1	Decal-Reel Speed
10:5	120-2102	1	Decal-Service
11	107-7833	1	ROPS ASM

Ref.	Part Number	Qty.	Description
11:1	107-7831	1	Decal-ROPS
12	3234-40	4	Screw-HF
13	121-7837-01	1	Cover-Battery, Inner
14	104-7050	1	Tube-Manual
15	2412-133	2	Clamp-R
16	32144-70	2	Screw-HWHTF
17	3256-23	2	Washer-Plain
18	2412-108	1	Clamp-Worm
19	104-7201	4	Nut-HF, NI
20	104-7048	1	Cap-Housing
23	322-6	2	Screw-HH
24	1-603903	2	Spacer
25	3256-3	2	Washer-Flat
26	3296-29	2	Nut-Lock, NI

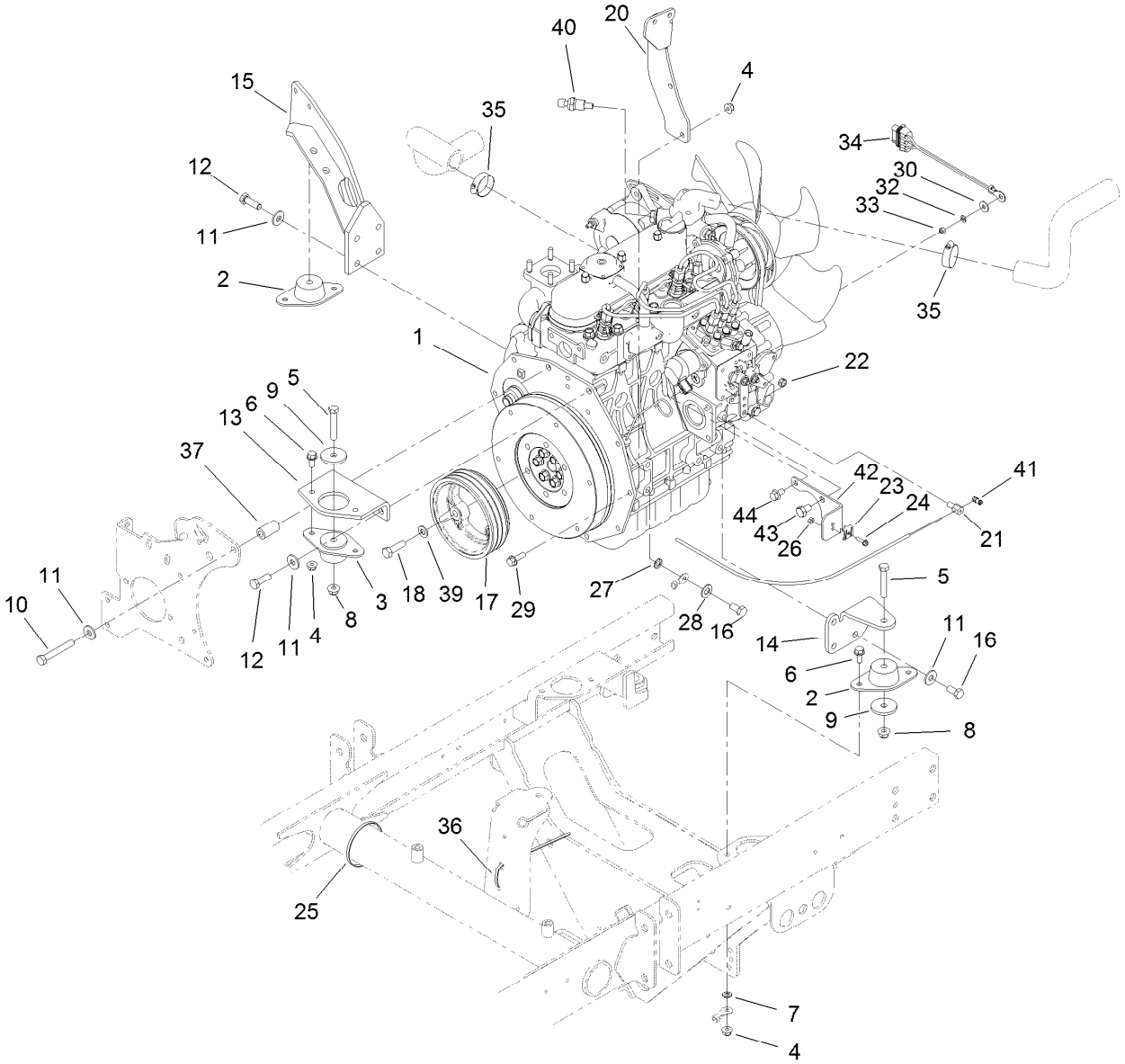

Engine Mount Assembly

Ref.	Part Number	Qty.	Description
1	127-9662	1	Engine-Kubota, D1105
2	83-1030	2	Mount-Engine
3	93-5265	1	Mount-Engine
4	104-8300	8	Nut-HF, NI
5	323-11	3	Screw-HH
6	3234-5	6	Screw-HHF
7	3255-8	1	Washer-Lock
8	104-8301	3	Nut-HF, NI
9	80-8560	3	Washer-Hardened
10	42-9370	1	Screw-HH
11	80-6990	9	Washer-Hardened
12	95-8812	5	Screw-HH
13	99-3618-03	1	Mount-Engine, Front
14	95-8937-03	1	Mount-Engine, LH
15	100-4838-03	1	Mount-Engine
16	63-7790	4	Screw-Cap
17	99-3626	1	Pulley-3V
18	56-2140	3	Screw-HH
20	115-3487-03	1	Bracket-Mount, Fuel Filter
21	98-9311	1	Swivel-Throttle
22	3296-20	1	Nut-Lock, NI

Ref.	Part Number	Qty.	Description
23	81-1690	1	Clamp-Cable
24	32105-13	1	Screw-HWH
25	3290-379	2	Tie-Cable
26	3296-2	1	Nut-Lock, NI
27	3255-9	1	Washer-Lock
28	3256-25	1	Washer-Flat
29	3234-17	2	Screw-HHF
30	3256-78	1	Washer-Flat
32	43-5930	1	Washer-Lock, Spring
33	48-7890	1	Nut-Hex
34	99-3441	1	Harness-Wire, Fusible Link
35	2412-34	2	Clamp-Hose
36	3290-378	14	Tie-Cable
37	95-8736	1	Spacer
39	3256-24	3	Washer-Flat
40	119-4478	1	Sender-Temperature
41	112-9919	1	Stop-Cable, Throttle
42	110-9009-03	1	Bracket-Cable, Throttle
43	63-7790	1	Screw-Cap
44	33104-016	1	Screw-HHF

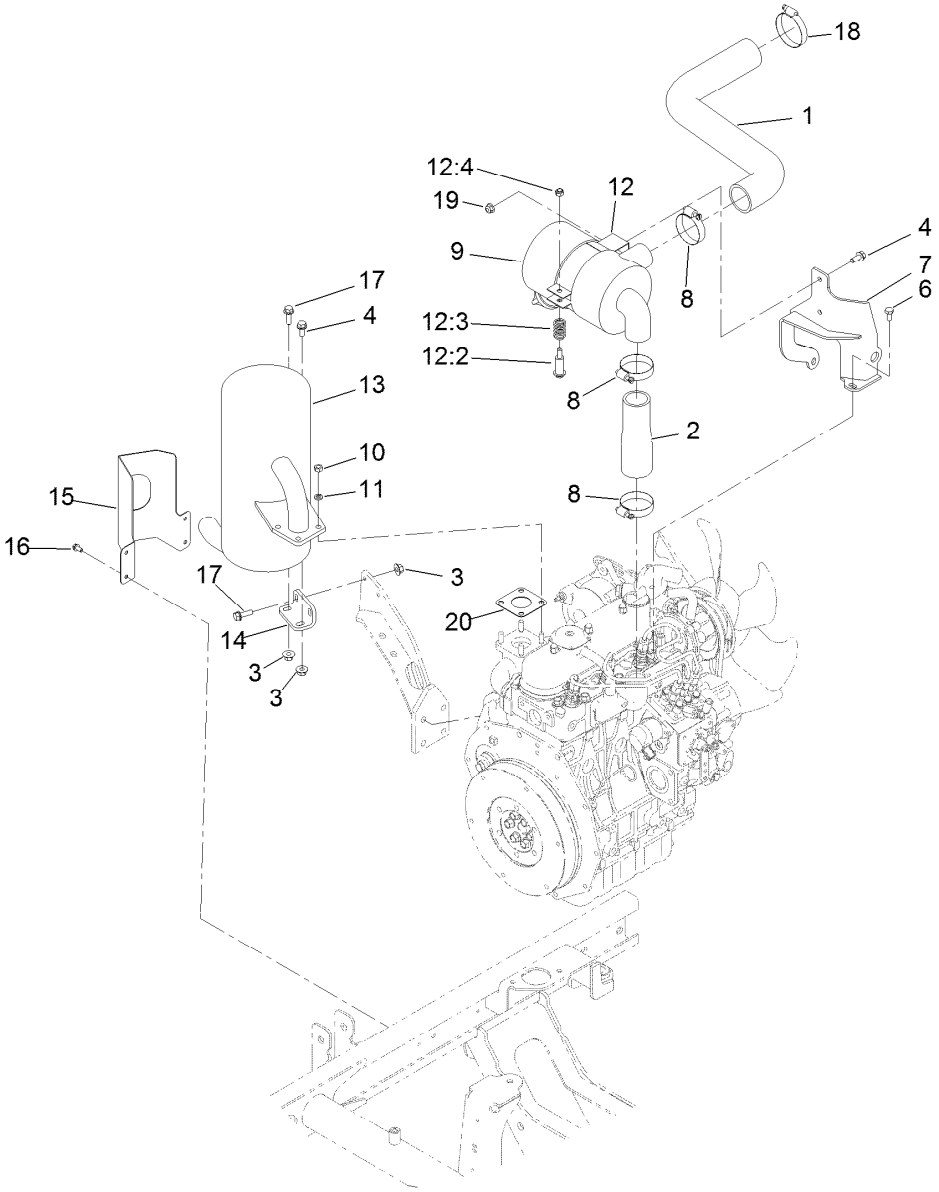

Engine Muffler and Air Cleaner Assembly

Ref.	Part Number	Qty.	Description
1	121-7834	1	Hose-Air Intake, Upper
2	95-8947	1	Hose-Air Inlet, Lower
3	32128-44	4	Nut
4	3234-5	3	Screw-HHF
6	33104-016	2	Screw-HHF
7	99-3355-03	1	Bracket-Filter, Air
8	2412-92	3	Clamp-Hose
9	93-2190	1	Air Cleaner ASM
10	33014-00	4	Nut-Hex
11	3253-4	4	Washer-Lock
12	93-2191	1	Air Cleaner Mounting Band ASM

Ref.	Part Number	Qty.	Description
12:2	94-3653	1	Bolt
12:3	94-3654	1	Spring
12:4	48-9510	1	Nut
13	104-4834	1	Muffler
14	95-8943-03	1	Bracket-Muffler
15	99-3425-03	1	Guard-Exhaust
16	32144-4	4	Screw-HWH
17	3234-17	3	Screw-HHF
18	2412-130	1	Clamp-Hose
19	104-8300	2	Nut-HF, NI
20	98-9611	1	Gasket

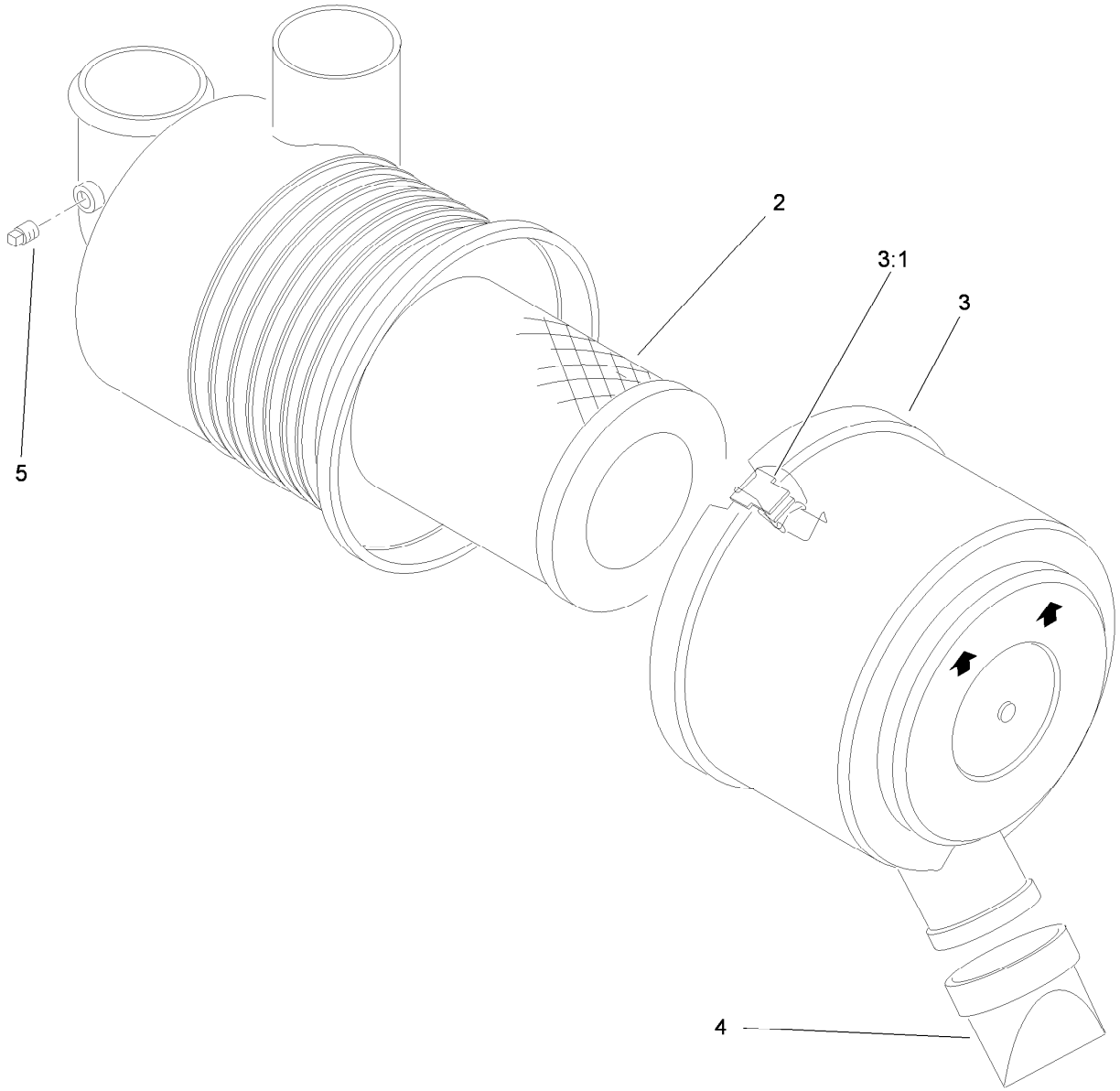

Air Cleaner Assembly No. 93-2190

Ref.	*Part Number*	*Qty.*	*Description*
2	108-3811	1	Filter-Air
3	94-3652	1	Cover ASM
3:1	1-643283	2	Latch-Cleaner, Air
4	87-9400	1	Valve-Vacuator
5	285-17	1	Plug-Pipe

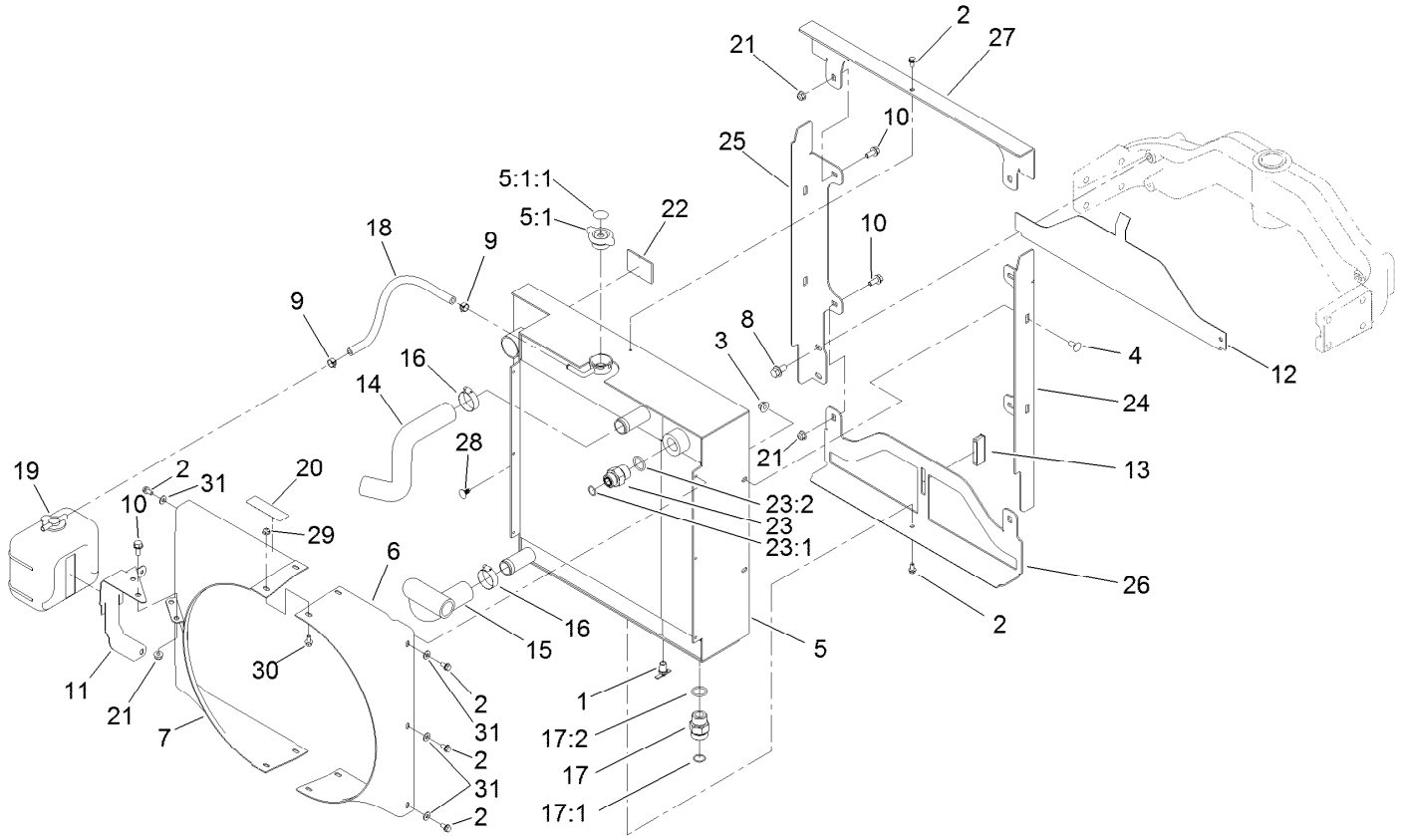

Radiator and Oil Cooler Assembly

Ref.	Part Number	Qty.	Description
1	304-46	1	Draincock
2	32104-116	8	Screw-HWHTF
3	32128-44	4	Nut
4	3230-1	4	Bolt-CARR
5	119-2028	1	Radiator And Oil Cooler ASM
5:1	115-7766	1	Cap-Radiator
5:1:1	106-6755	1	Decal-Cap, Radiator
6	121-7853	1	Shroud-LH
7	121-7857	1	Shroud-RH
8	3234-1	4	Screw-HHF
9	92-2379	2	Clamp-Hose
10	3234-5	6	Screw-HHF
11	121-7859-03	1	Bracket-Overflow Bottle
12	95-8702-03	1	Shield-Radiator, Lower
13	99-3497	1	Magnet
14	120-2193	1	Hose-Radiator, Upper
15	120-3353	1	Hose-Radiator, Lower
16	2412-34	2	Clamp-Hose

Ref.	Part Number	Qty.	Description
17	340-9	1	Fitting-STR
17:1	237-58	1	O-Ring
17:2	237-81	1	O-Ring
18	109-0274	1	Hose-Fuel
19	104-9318	1	Bottle-Overflow
20	120-0627	1	Decal-Warning
21	104-8300	6	Nut-HF, NI
22	104-9459	2	Seal-Foam
23	340-8	1	Fitting-Straight
23:1	237-65	1	O-Ring
23:2	237-81	1	O-Ring
24	120-3531-03	1	Bracket-Radiator, LH
25	120-3532-03	1	Bracket-Radiator, RH
26	120-3530-03	1	Bracket-Radiator, Bottom
27	120-3529-03	1	Bracket-Radiator, Top
28	117-2382	2	Plug-Plastic
29	104-7201	4	Nut-HF, NI
30	3234-13	4	Screw-HHF
31	3256-22	4	Washer-Flat

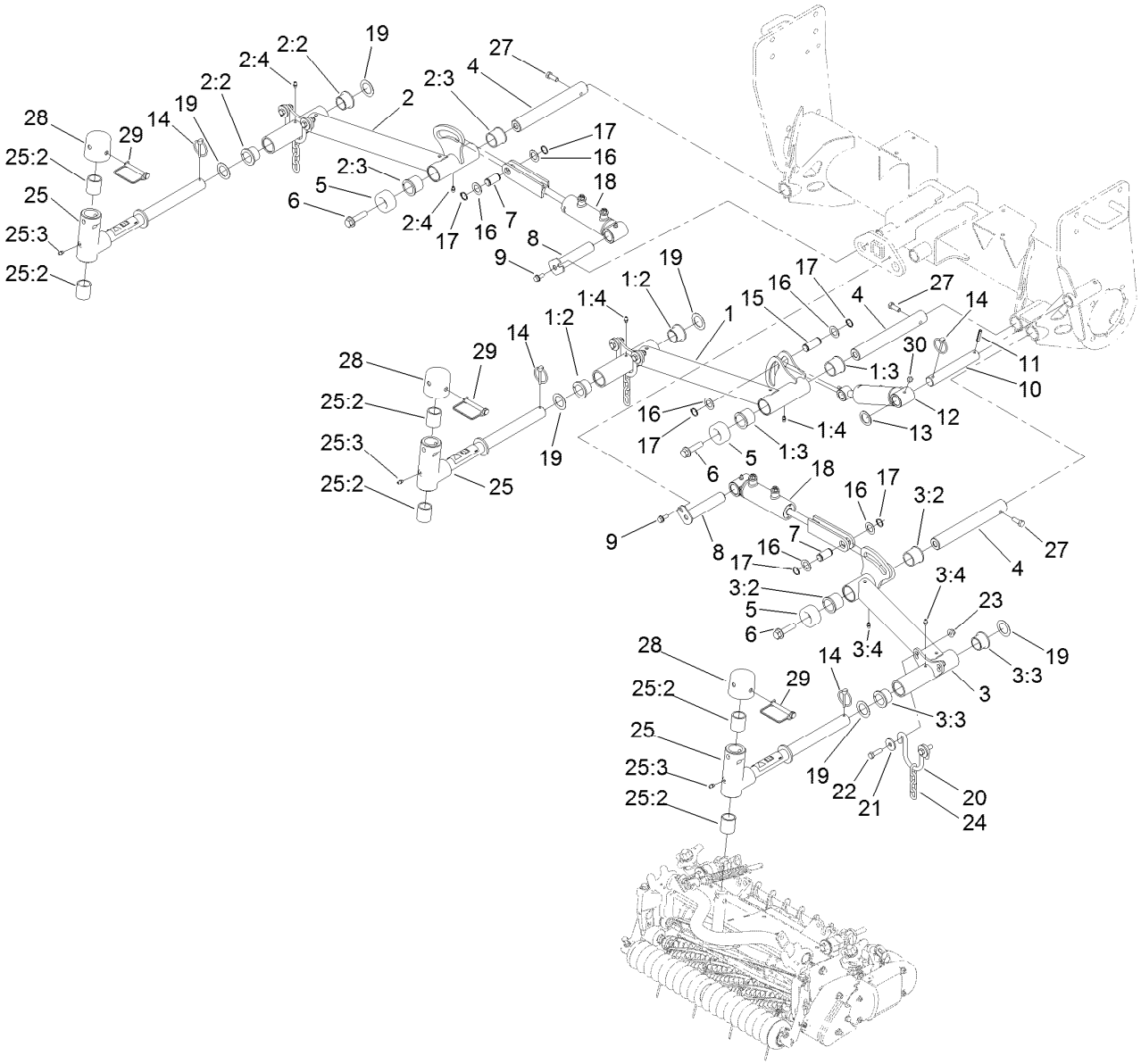

No. 1, No. 4 and No. 5 Lift Arm Assembly

Ref.	Part Number	Qty.	Description
1	120-2159	1	No. 1 Lift Arm ASM
1:2	121-7863	2	Bushing-Special
1:3	104-0015	2	Bushing-Flange
1:4	302-5	2	Fitting-Grease
2	120-2162	1	No. 5 Lift Arm ASM
2:2	121-7863	2	Bushing-Special
2:3	104-0015	2	Bushing-Flange
2:4	302-5	2	Fitting-Grease
3	120-2163	1	No. 4 Lift Arm ASM
3:2	104-0015	2	Bushing-Flange
3:3	121-7863	2	Bushing-Special
3:4	302-5	2	Fitting-Grease
4	120-2084	3	Pin-Liftarm
5	121-7855	3	Bumper-Recessed
6	3234-27	3	Screw-HHF
7	120-9219	2	Pin-Cylinder
8	10-6090	2	Pin-Pivot
9	32144-11	2	Screw-HWH
10	120-2158	1	Pin
11	32121-15	1	Pin-Roll

Ref.	Part Number	Qty.	Description
12	119-6988	1	HYD Cylinder ASM
13	10-8110	1	Washer-Thrust
14	92-1298	4	Pin-Lynch
15	94-3452	1	Pin
16	3-6498	6	Washer-Thrust
17	32120-72	6	Ring-Snap
18	120-9980	2	HYD Cylinder ASM
19	120-2183	6	Washer-Thrust
20	120-9962	3	Hoop-Chain
21	63-8410	6	Washer
22	323-7	6	Screw-HH
23	104-8301	6	Nut-HF, NI
24	84-2450	3	Chain-Straight, 4-Link
25	120-1605	3	Pivot Yoke ASM
25:2	121-3187	2	Bushing
25:3	302-5	1	Fitting-Grease
27	323-6	3	Screw-HH
28	107-4027	3	Cap
29	107-7400	3	Pin-Lynch
30	302-2	1	Fitting-Grease

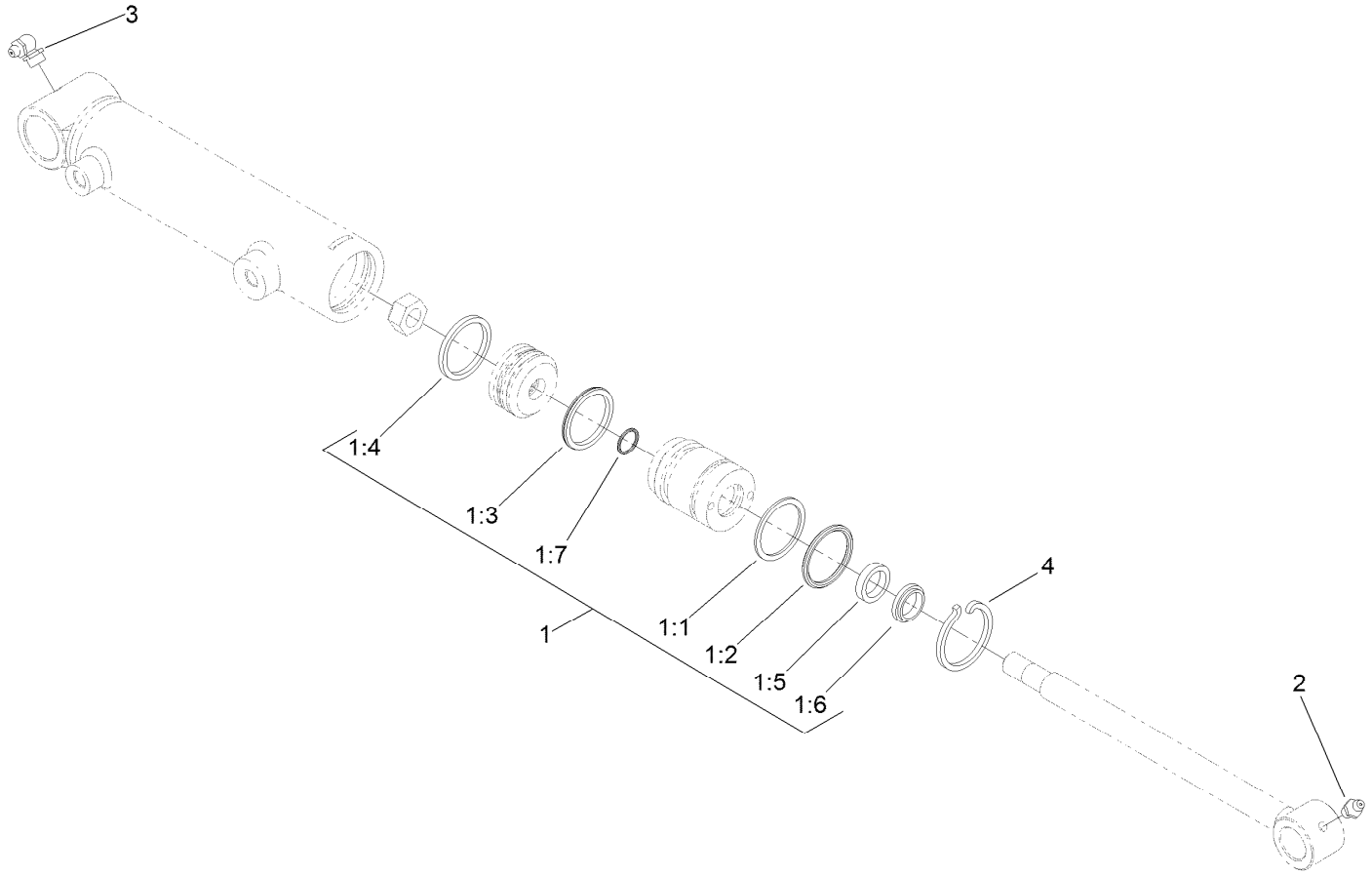

Hydraulic Cylinder Assembly No. 119-6988

Ref.	*Part Number*	*Qty.*	*Description*
1	119-6992	1	Seal Kit
1:1		1	O-Ring ●
1:2		1	Backup ●
1:3		1	Bp Seal ●
1:4		1	Wear Ring-Ht ●
1:5		1	Bs Seal ●
1:6		1	Dust Seal-Dt ●
1:7		1	O-Ring ●
2	302-5	1	Fitting-Grease
3	302-33	1	Fitting-Grease
4	84-1680	1	Ring-Retaining

● Not serviced separately

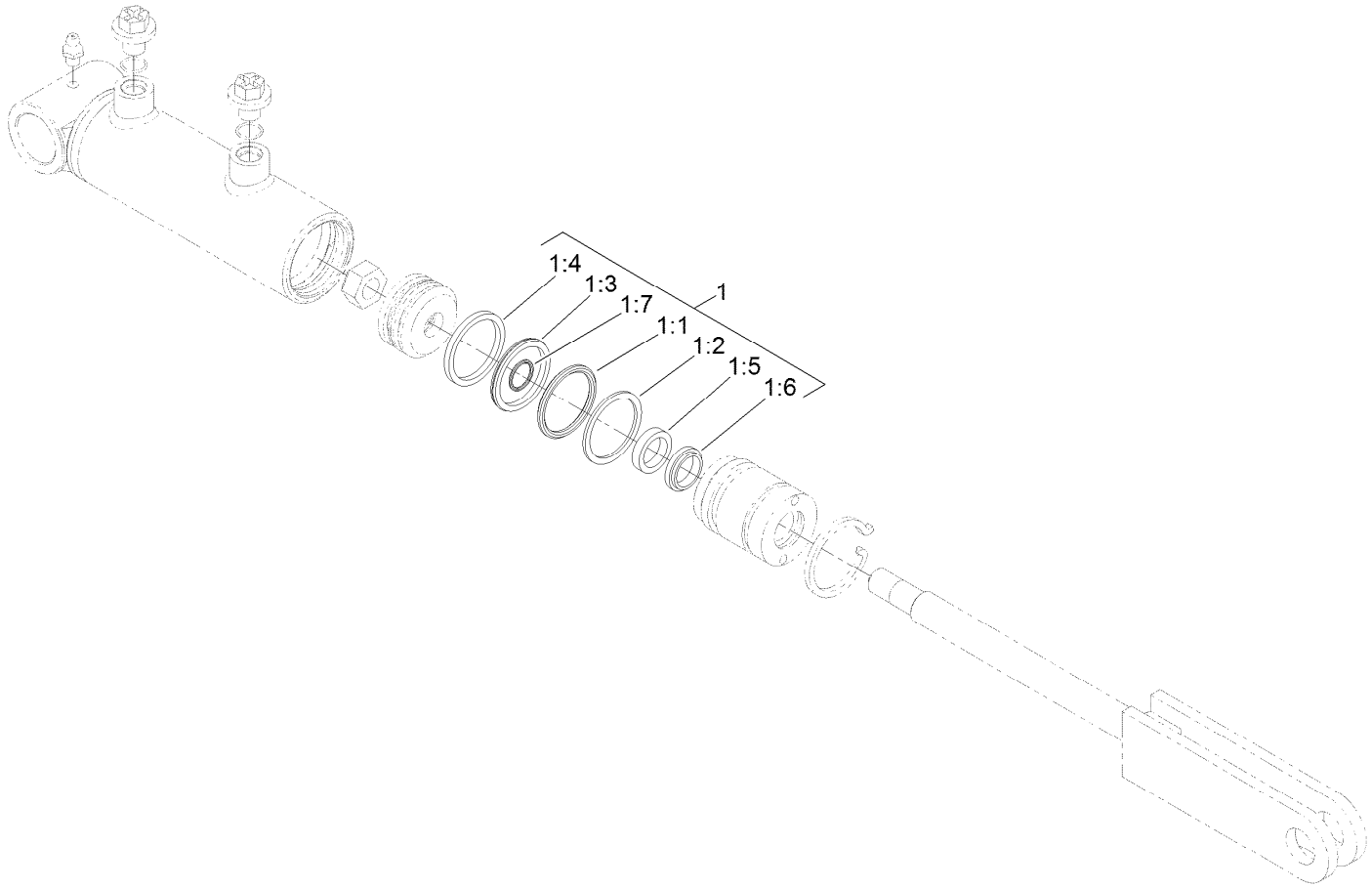

Hydraulic Cylinder Assembly No. 120-9980

Ref.	*Part Number*	*Qty.*	*Description*
1	119-6992	1	Seal Kit
1:1		1	O-Ring ●
1:2		1	Backup ●
1:3		1	Bp Seal ●
1:4		1	Wear Ring-Ht ●
1:5		1	Bs Seal ●
1:6		1	Dust Seal-Dt ●
1:7		1	O-Ring ●

● Not serviced separately

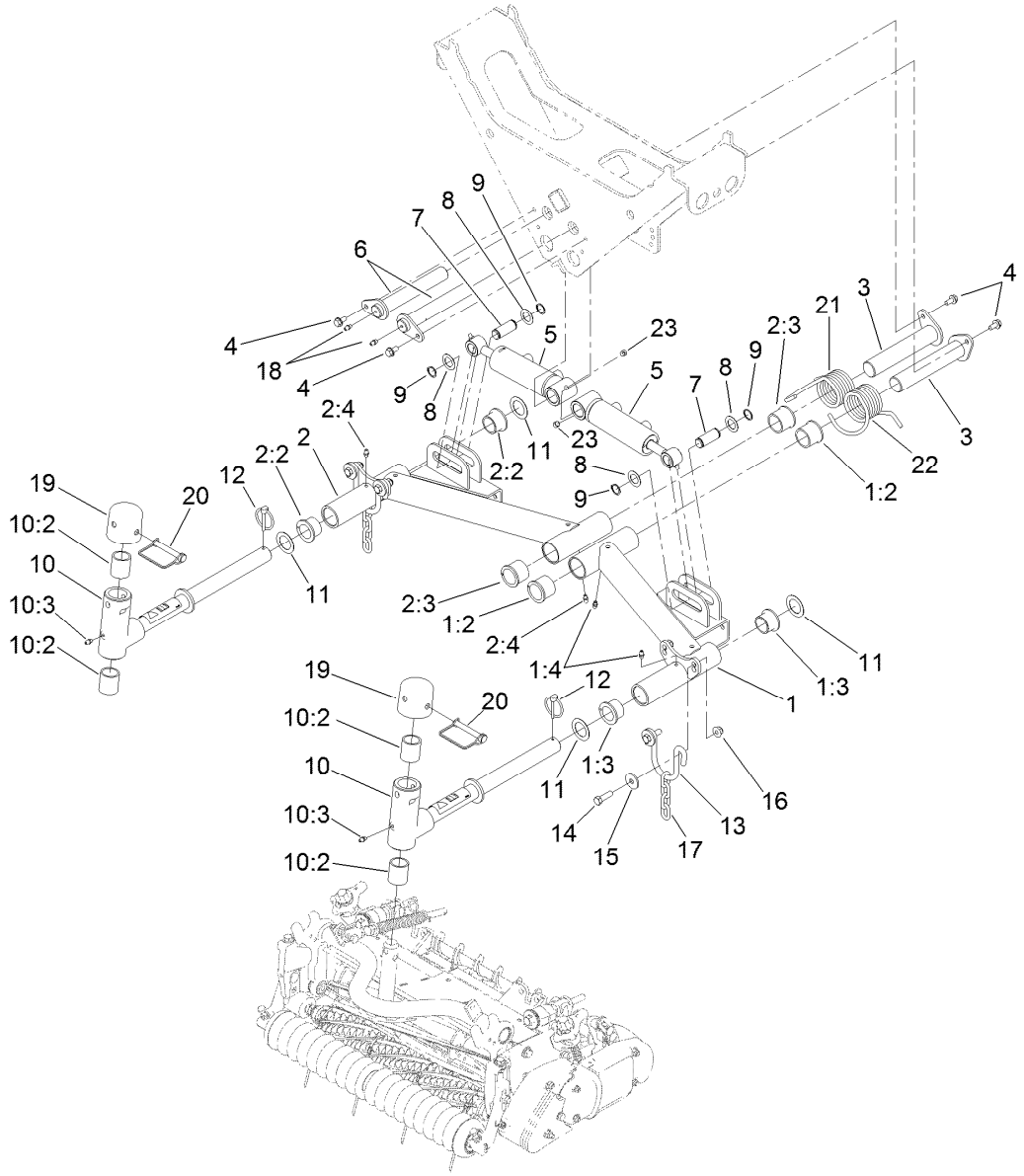

No. 2 and No. 3 Lift Arm Assembly

Ref.	Part Number	Qty.	Description
1	120-2147	1	No. 2 Lift Arm ASM
1:2	104-0015	2	Bushing-Flange
1:3	121-7863	2	Bushing-Special
1:4	302-5	2	Fitting-Grease
2	120-2148	1	No. 3 Lift Arm ASM
2:2	121-7863	2	Bushing-Special
2:3	104-0015	2	Bushing-Flange
2:4	302-5	2	Fitting-Grease
3	120-2127	2	Pin ASM
4	32144-14	4	Screw-HWHTF
5	119-6988	2	HYD Cylinder ASM
6	120-2129	2	Pin ASM
7	94-3452	2	Pin
8	3-6498	4	Washer-Thrust
9	32120-72	4	Ring-Snap
10	120-1605	2	Pivot Yoke ASM

Ref.	Part Number	Qty.	Description
10:2	121-3187	2	Bushing
10:3	302-5	1	Fitting-Grease
11	120-2183	4	Washer-Thrust
12	92-1298	2	Pin-Lynch
13	120-9962	2	Hoop-Chain
14	323-7	4	Screw-HH
15	63-8410	4	Washer
16	104-8301	4	Nut-HF, NI
17	84-2450	2	Chain-Straight, 4-Link
18	302-5	2	Fitting-Grease
19	107-4027	2	Cap
20	107-7400	2	Pin-Lynch
21	120-2614	1	Spring-Torsion, RH
22	120-2615	1	Spring-Torsion, LH
23	285-17	2	Plug-Pipe

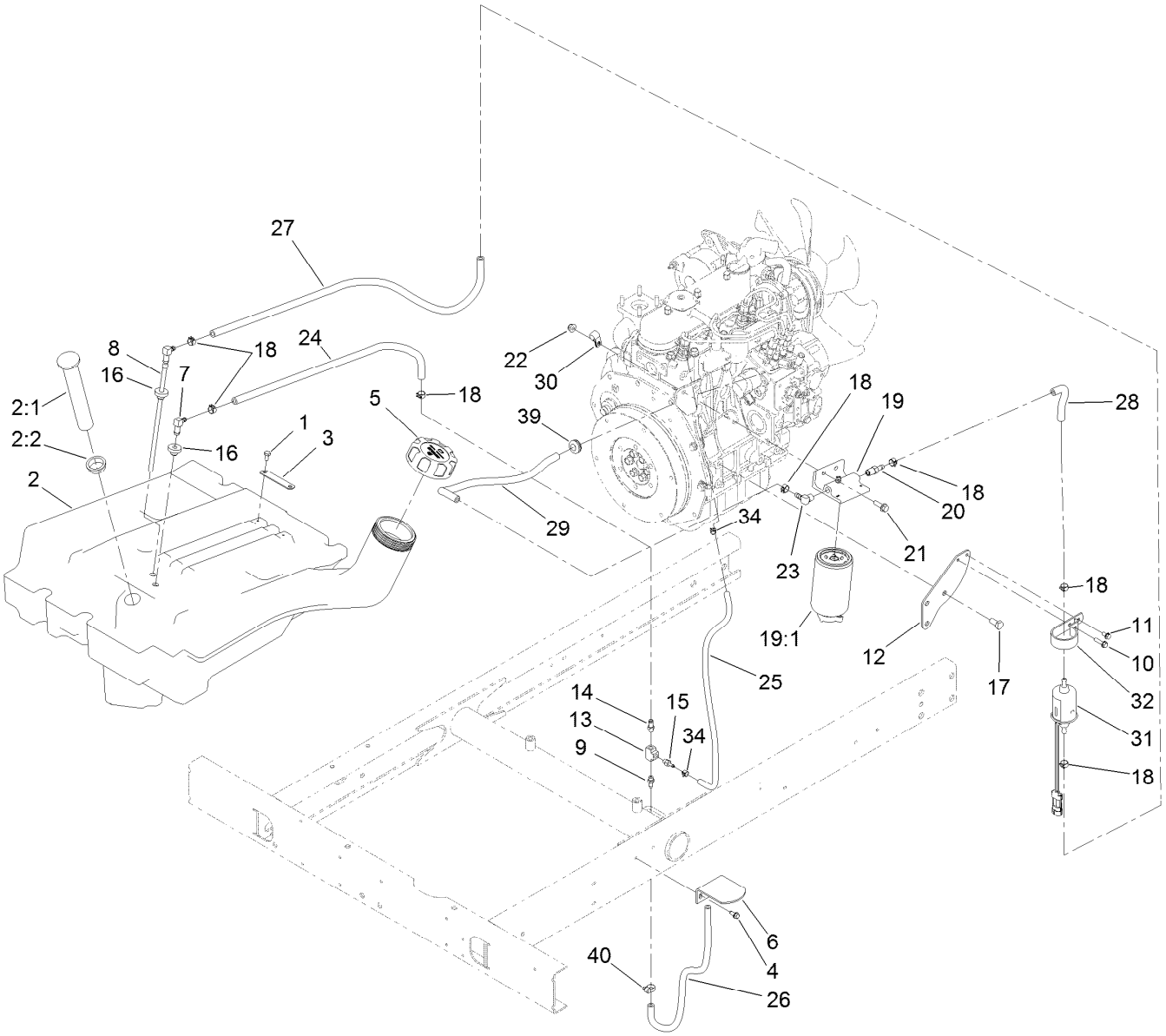

Fuel Tank and Filter Assembly

Ref.	Part Number	Qty.	Description
1	321-2	2	Screw-HH
2	95-8620	1	Tank-Fuel
2:1	95-8971	1	Gauge-Fuel
2:2	95-8972	1	Grommet
3	95-8881	1	Strap-Line, Fuel
4	32144-10	2	Screw-HWH
5	114-5064	1	Cap-Diesel
6	95-8968-03	1	Support-Tank, Fuel
7	46-6550	1	Fitting-Elbow, 90 DEG
8	110-9689	1	Pipe-Stand
9	304-73	1	Fitting-Straight
10	32144-86	1	Screw-HWHTF
11	32144-4	1	Screw-HWH
12	120-2182-03	1	Plate-Mount, Fuel Pump
13	354-20	1	Fitting-Tee
14	354-21	1	Fitting-Barbed
15	354-22	1	Fitting-Barbed
16	46-6560	2	Bushing
17	63-7790	3	Screw-Cap

Ref.	Part Number	Qty.	Description
18	92-2379	7	Clamp-Hose
19	110-9044	1	Separator-Filter
19:1	110-9049	1	Filter-Spin On, Fuel/Water
20	353-783	1	Fitting-STR
21	3234-17	2	Screw-HHF
22	104-8300	2	Nut-HF, NI
23	353-781	1	Fitting-HYD, 90
24	110-6187	1	Hose-Fuel
25	110-8751	1	Hose-Fuel
26	110-5701	1	Hose-Fuel
27	121-7914	1	Hose-Fuel
28	117-4026	1	Hose-Fuel
29	121-7852	1	Hose-Fuel
30	2412-10	1	Clamp-R
31	110-8806	1	Pump-Fuel
32	110-8817	1	Bracket-Pump, Fuel
34	2412-80	2	Clamp-Hose
39	1-543296	1	Grommet
40	2412-108	2	Clamp-Worm

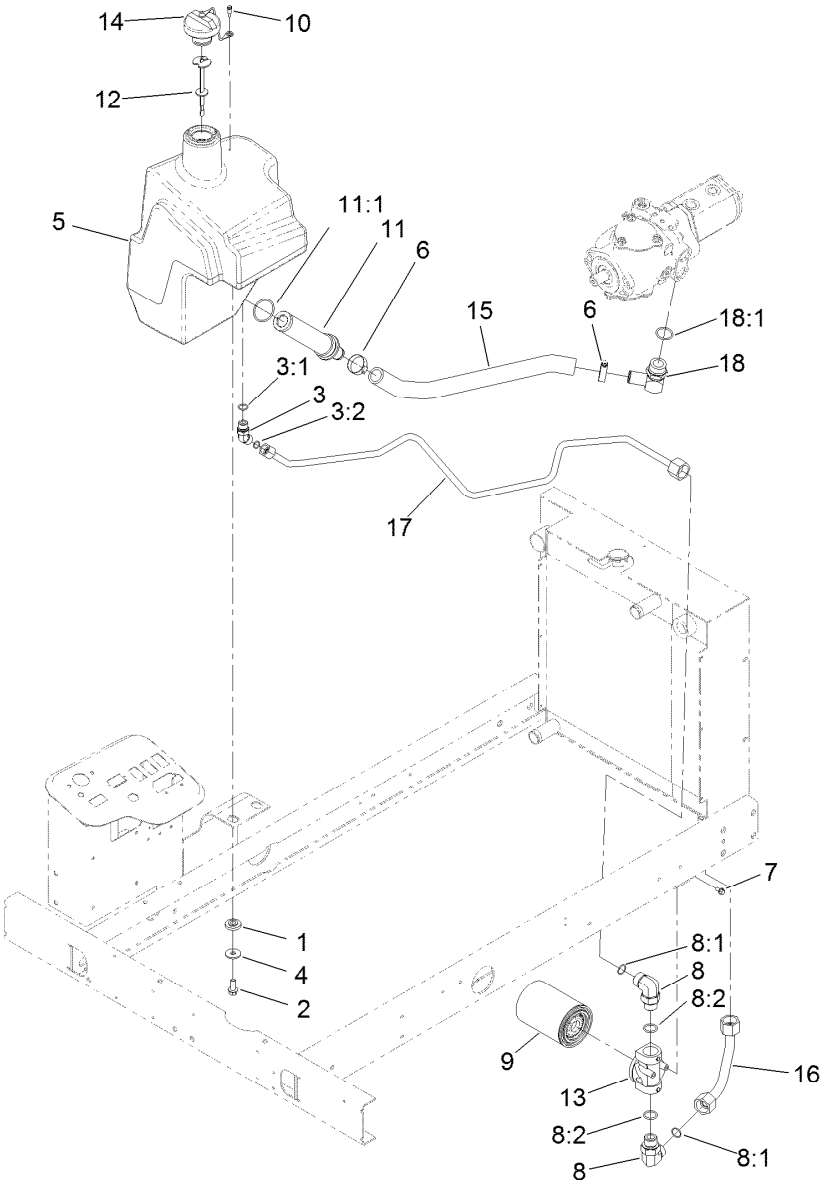

Hydraulic Tank and Filter Assembly

Ref.	Part Number	Qty.	Description
1	240-11	4	Bushing-Flange
2	3234-11	4	Screw-HHF
3	340-101	1	Fitting-HYD, 45 DEG
3:1	237-30	1	O-Ring
3:2	237-79	1	O-Ring
4	63-8410	4	Washer
5	104-4840	1	Tank-HYD
6	2412-34	2	Clamp-Hose
7	3234-13	2	Screw-HHF
8	340-142	2	Fitting-Elbow, 90 DEG
8:1	237-58	1	O-Ring
8:2	237-81	1	O-Ring

Ref.	Part Number	Qty.	Description
9	86-3010	1	Filter-Oil
10	57-5420	1	Screw-Shoulder
11	104-7546	1	Tank Strainer ASM
11:1	340-136	1	O-Ring
12	119-6968	1	Dipstick-Oil
13	92-5821	1	Head-Filter
14	93-7160	1	Cap-Oil, HYD
15	121-7803	1	Hose-Suction
16	120-2184	1	Tube-HYD
17	121-7842	1	Tube-HYD
18	23-8910	1	Stem-Barb-90
18:1	237-146	1	O-Ring

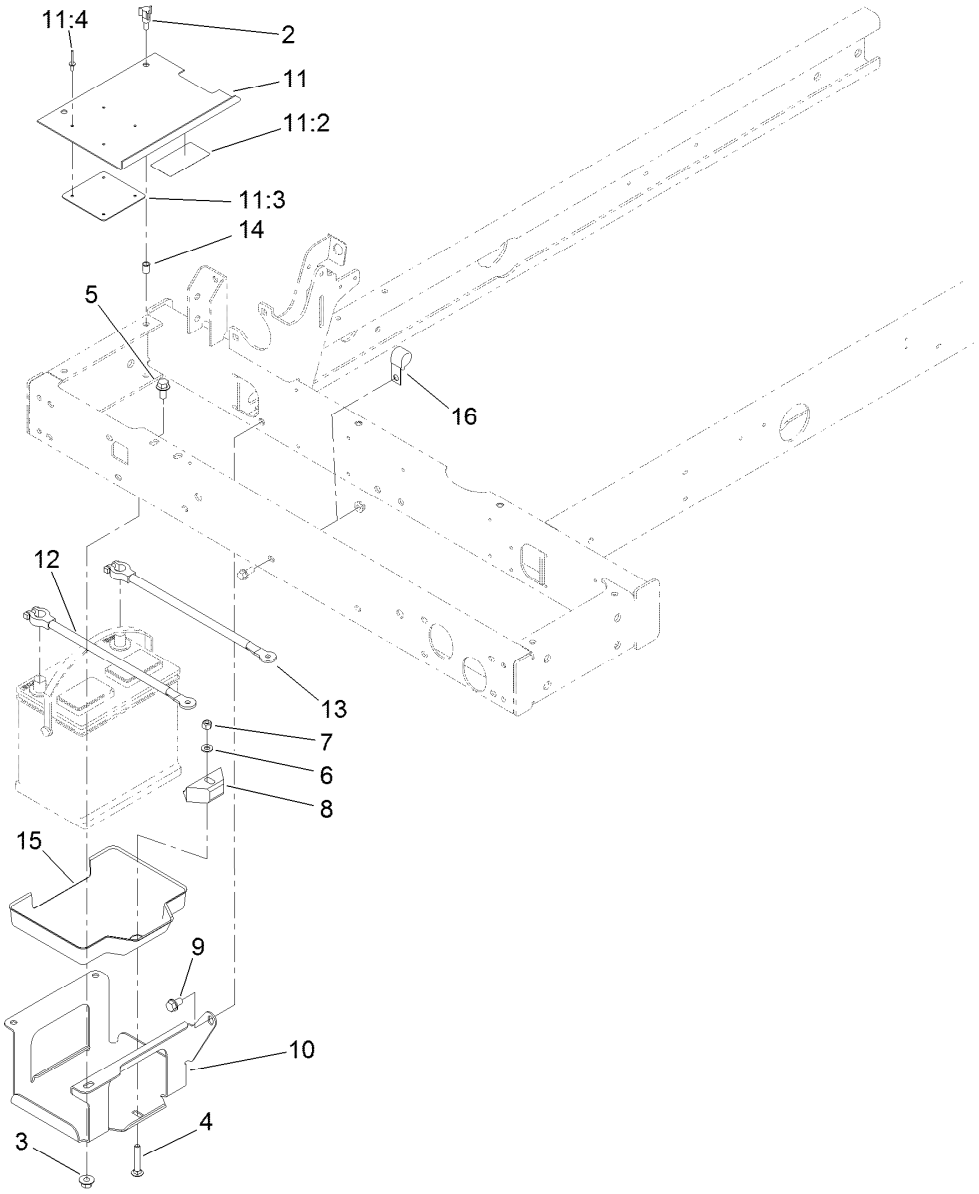

Battery Assembly

Ref.	Part Number	Qty.	Description
2	233-70	2	Knob-Star, Three
3	32128-43	3	Nut-Flange
4	3230-6	1	Bolt-CARR
5	3234-1	3	Screw-HHF
6	3256-23	1	Washer-Plain
7	3296-29	1	Nut-Lock, NI
8	66-2490	1	Retainer-Battery
9	32144-15	1	Screw-HHFTF
10	95-8796-03	1	Support-Battery

Ref.	Part Number	Qty.	Description
11	99-3602	1	Battery Cover ASM
11:2	93-7276	1	Decal-Danger
11:3	87-7620	1	Shield-Terminal, Battery
11:4	3269-27	4	Rivet-Snap
12	95-8853	1	Cable-Battery, Positive
13	95-8854	1	Cable-Battery, Negative
14	32148-6	2	Nut-Clinch
15	99-3513	1	Tray-Battery
16	94-9580	1	Clamp-J

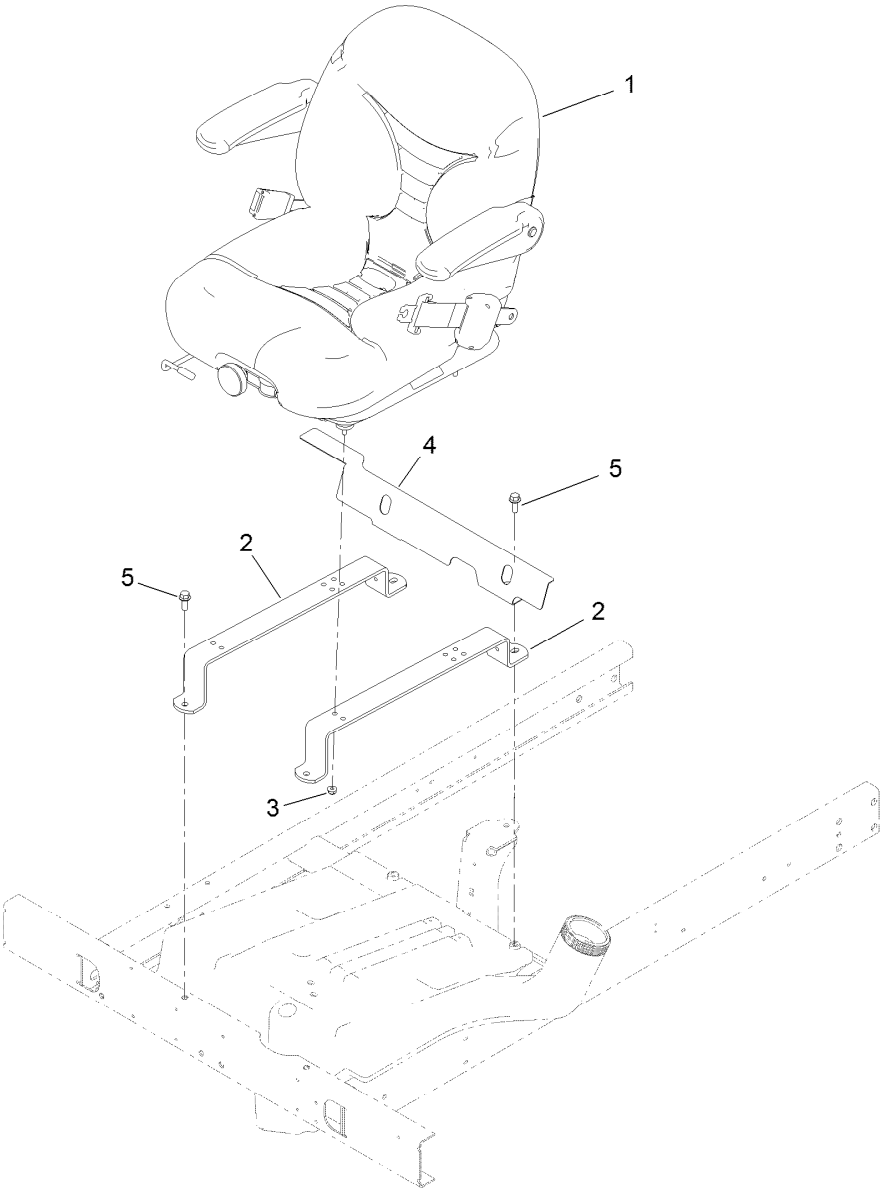

Seat and Heat-Shield Assembly

Ref.	*Part Number*	*Qty.*	*Description*
1	116-3998	1	Suspension Seat ASM
2	120-2120-03	2	Strap-Support, Seat
3	104-8300	4	Nut-HF, NI
4	104-4833-03	1	Shield-Heat
5	3234-11	4	Screw-HHF

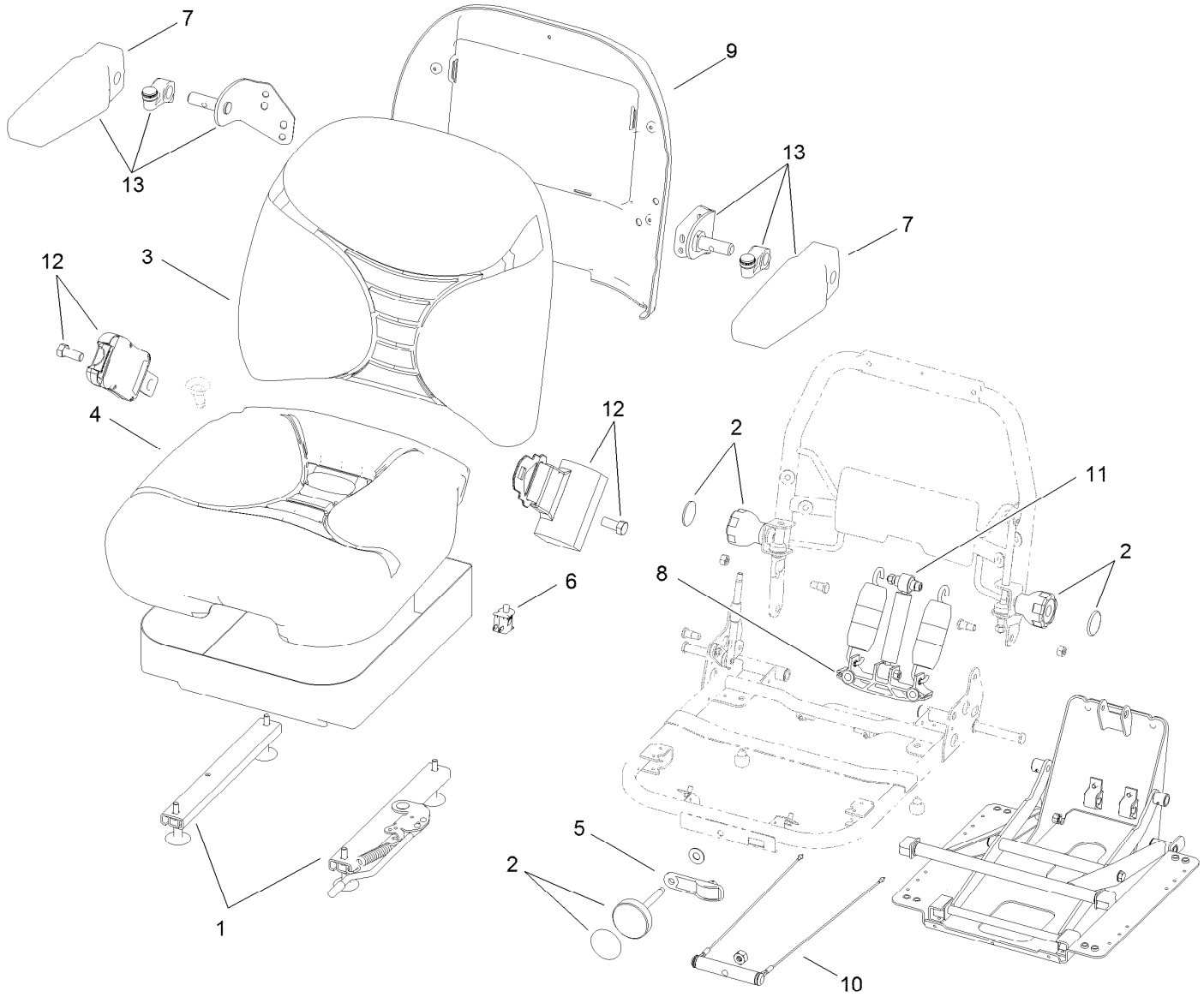

Seat Assembly No. 116-3998

Ref.	Part Number	Qty.	Description
1	116-0333	1	Seat Track Kit
2	107-1881	1	Knob Kit
3	107-1882	1	Back Cushion Kit
4	107-1883	1	Bottom Cushion Kit
5	107-1885	1	Weight Indicator Kit
6	82-2190	1	Switch-Bail
7	107-1887	1	Pad-Armrest
8	109-3343	1	Spring And Saddle Kit
9	109-3344	1	Back Panel Kit
10	109-3345	1	Weight Adjust Kit
11	116-0998	1	Shock Absorber Kit
12	110-0413	1	Seatbelt-Retractable
13	121-9415	1	Armrest Kit

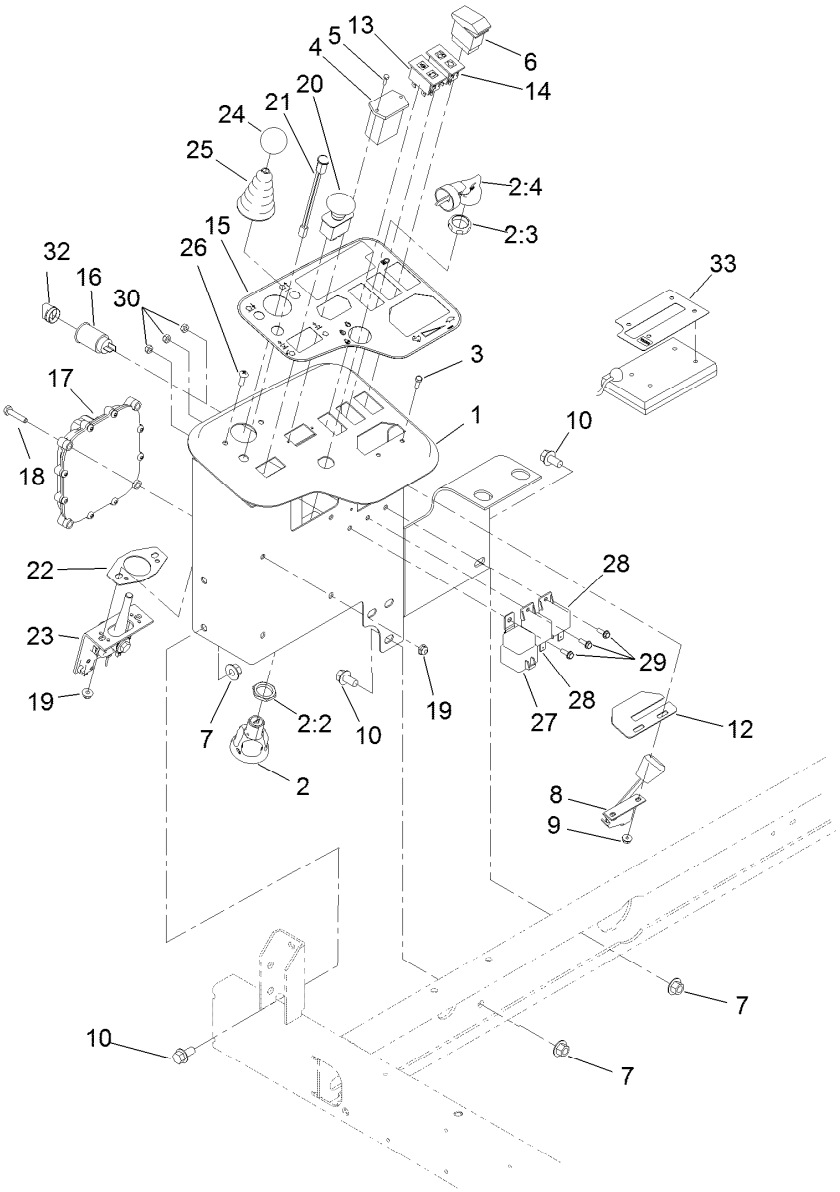

Control Panel Assembly

Ref.	Part Number	Qty.	Description
1	120-2051-03	1	Panel-Control
2	121-5159	1	Ignition Switch ASM
2:2	121-5160	1	Nut-Hex
2:3	121-5161	1	Nut-Face
2:4	121-5162	1	Set-Key, Ignition
3	3290-134	2	Screw
4	75-6820	1	Hourmeter
5	32144-18	2	Screw-HWH
6	95-8999	1	Switch
7	32128-43	5	Nut-Flange
8	110-8795	1	Cable-Throttle
9	3290-148	2	Nut-HF
10	3234-1	5	Screw-HHF
12	104-0421	1	Plate-Stop, Throttle
13	100-8070	1	Lamp-Warning
14	100-8071	1	Lamp-Warning
15	120-2105	1	Decal-Console

Ref.	Part Number	Qty.	Description
16	99-7411	1	Point-Power
17	115-1900	1	Controller
18	321-8	4	Screw-HH
19	104-7201	6	Nut-HF, NI
20	93-9999	1	Switch-PTO
21	95-7652	1	Light-Indicator
22	112-9181	1	Plate-Boot
23	120-5280	1	Bracket-Joystick
24	233-42	1	Knob
25	93-5961	1	Boot-Lever
26	3258-166	2	Screw-PRH
27	99-7430	1	Relay-Mini
28	99-7435	2	Relay
29	32105-23	3	Screw
30	3290-148	3	Nut-HF
32	99-7416	1	Cap
33	121-7886	1	Decal-Diagnostic Controller

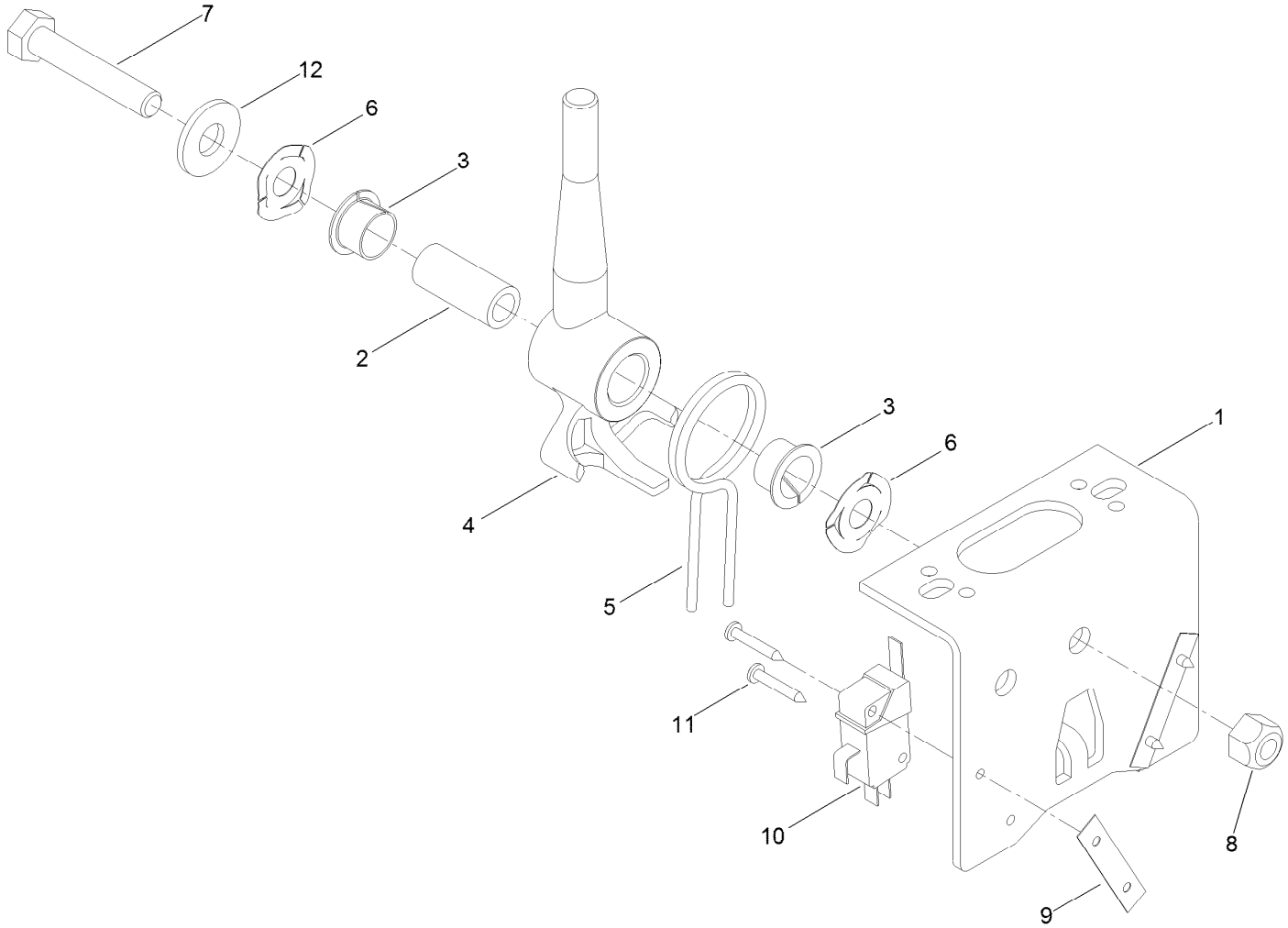

Joystick Bracket Assembly No. 120-5280

Ref.	*Part Number*	*Qty.*	*Description*
1	115-5357-03	1	Bracket-Joystick
2	106-4192	1	Spacer
3	93-5547	2	Bushing-Nylon
4	119-3540	1	Hub-Pivot, Joystick
5	105-8289	1	Spring-Torsion
6	106-4193	2	Washer-Finger, Spring
7	322-9	1	Screw-HH
8	3296-29	1	Nut-Lock, NI
9	3290-354	2	Nut-Speed
10	108-6496	2	Switch (W/Boot)
11	95-3003	4	Screw-PPHTF
12	3256-3	1	Washer-Flat

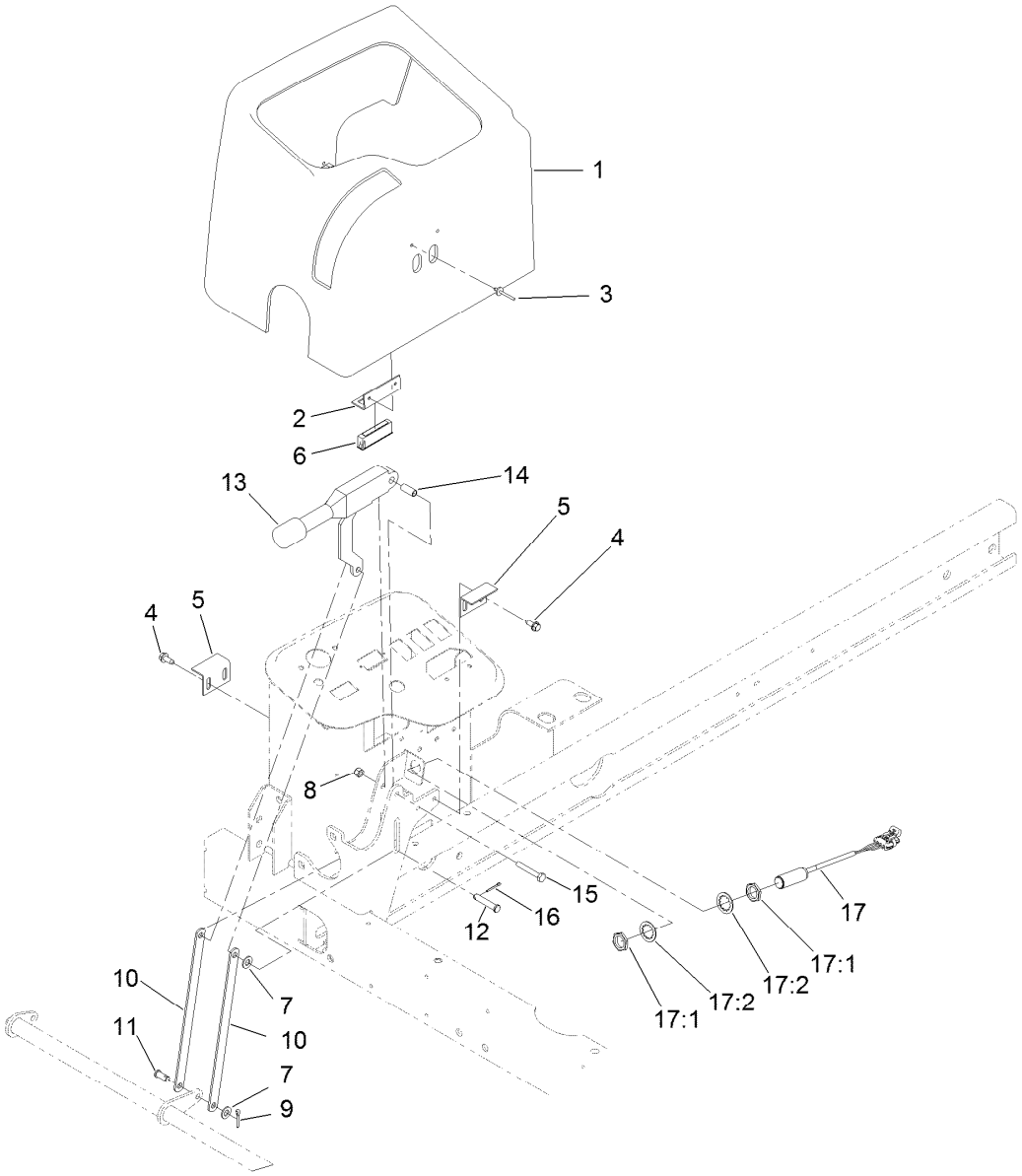

Parking Brake Assembly

Ref.	Part Number	Qty.	Description
1	120-2054	1	Cover-Plastic
2	95-8763	2	Bracket-Hold Down, Cover
3	3269-5	4	Rivet-Pop
4	32144-10	4	Screw-HWH
5	95-8765	2	Bracket-Strike, Magnet
6	58-4250	2	Catch-Magnetic
7	3256-23	2	Washer-Plain
8	3296-42	1	Nut-Lock, NI
9	3272-10	1	Pin-Cotter
10	104-4628-03	2	Link-Brake, Parking
11	283-62	1	Pin-Clevis
12	94-3829	1	Pin-Clevis
13	104-4817	1	Lever-Brake
14	87-4710	1	Spacer-Brake, Parking
15	321-10	1	Screw-HH
16	3272-6	1	Pin-Cotter
17	115-0282	1	Proximity Sensor ASM
17:1	117-3207	2	Nut-Hex
17:2	117-3208	2	Washer-Lock, Internal Tooth

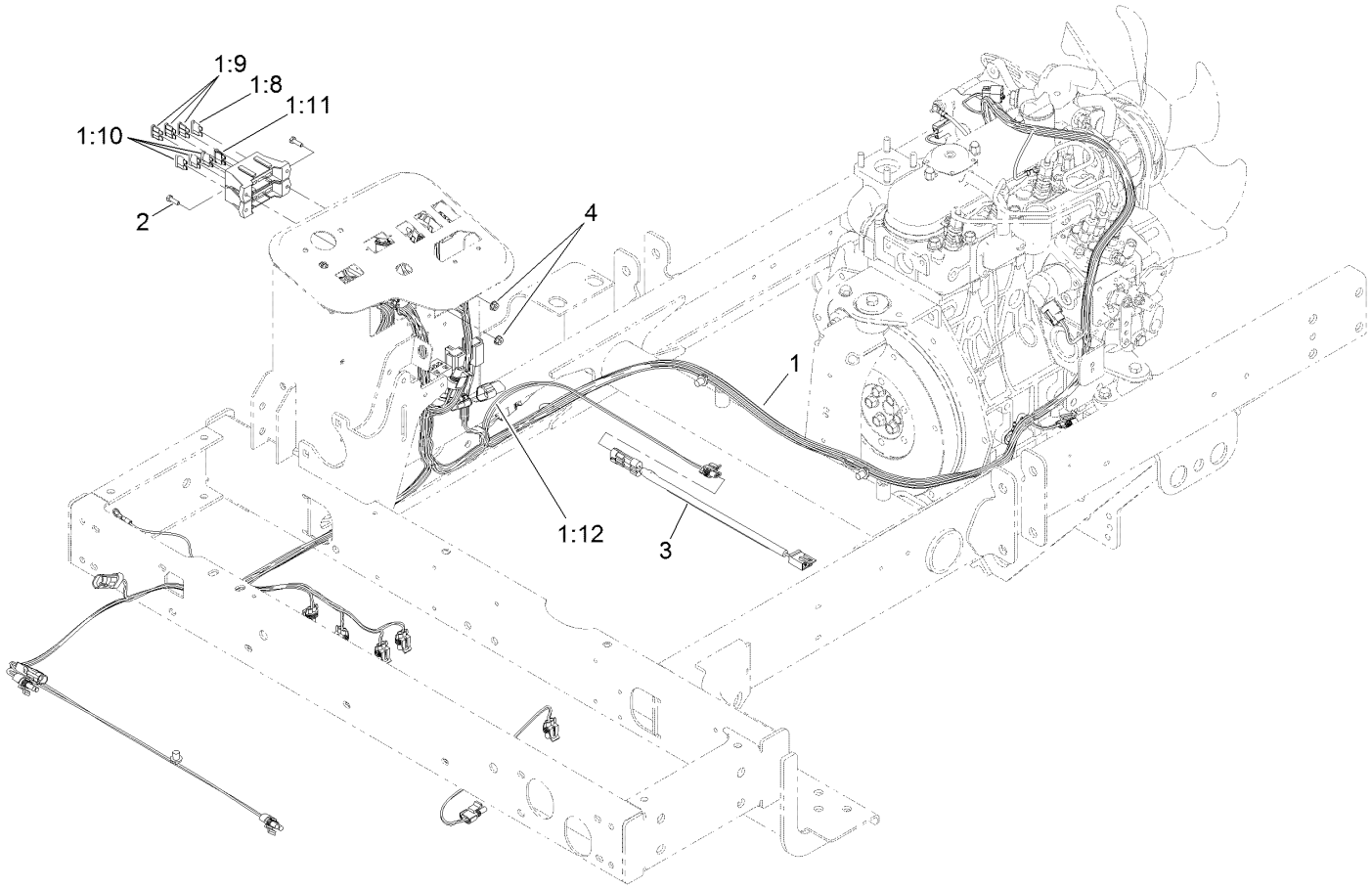

Main Wire Harness Assembly

Ref.	*Part Number*	*Qty.*	*Description*
1	120-3959	1	Harness-Wire, Main
1:8	94-6710	1	Fuse-2 Amp
1:9	114241	3	Fuse-Blade, 7.5 Amp
1:10	218-578	3	Fuse-Blade, 10 Amp
1:11	109355	1	Fuse-Blade, 15 Amp
1:12	32180-043	2	Resistor-120 Ohm
2	3290-134	2	Screw
3	108-8657	1	Harness-Wire, Seat
4	3290-148	2	Nut-HF

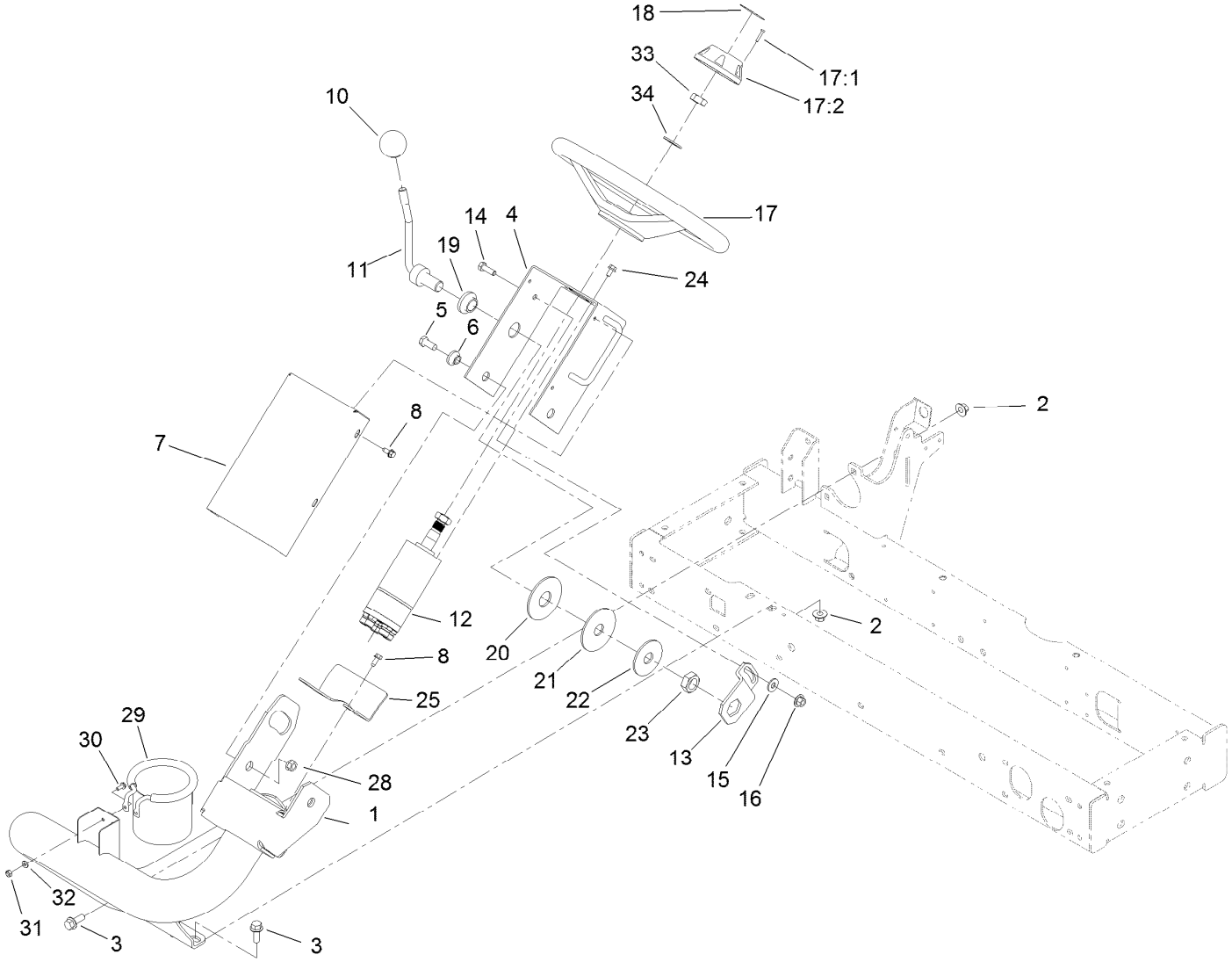

Steering Arm Assembly

Ref.	Part Number	Qty.	Description
1	120-2063-01	1	Arm-Steering
2	32128-43	4	Nut-Flange
3	3234-1	4	Screw-HHF
4	120-2190-01	1	Bracket-Valve
5	323-5	2	Screw-HH
6	93-5988	2	Hub-Pivot
7	95-8794-01	1	Cover-Valve, Steering
8	32144-10	5	Screw-HWH
10	233-48	1	Knob
11	95-8798-03	1	Lever-Steering
12	121-7856	1	Steering Valve ASM
13	80-2880	1	Bracket-Tilt
14	322-5	1	Screw-HH
15	3256-3	1	Washer-Flat
16	32128-44	1	Nut
17	75-0560	1	Steering Wheel ASM
17:1	32144-21	1	Screw

Ref.	Part Number	Qty.	Description
17:2	68-5140	1	Cap-Wheel, Steering
18	68-5370	1	Decal
19	99-3502	1	Boss
20	31-0390	1	Disc-Friction
21	82-9010	1	Disc-Friction
22	80-2930	1	Washer-Flat
23	3218-7	1	Nut-Jam
24	33103-012	4	Screw-HHF
25	99-3405-01	1	Shield-Steering
28	32128-21	2	Nut-HF Lock
29	117-2378	1	Holder-Bag
30	3290-321	2	Screw-HWH
31	3296-2	2	Nut-Lock, NI
32	3256-14	2	Washer-Flat
33	3296-33	1	Nut-Lock, NI
34	3256-27	1	Washer-Flat

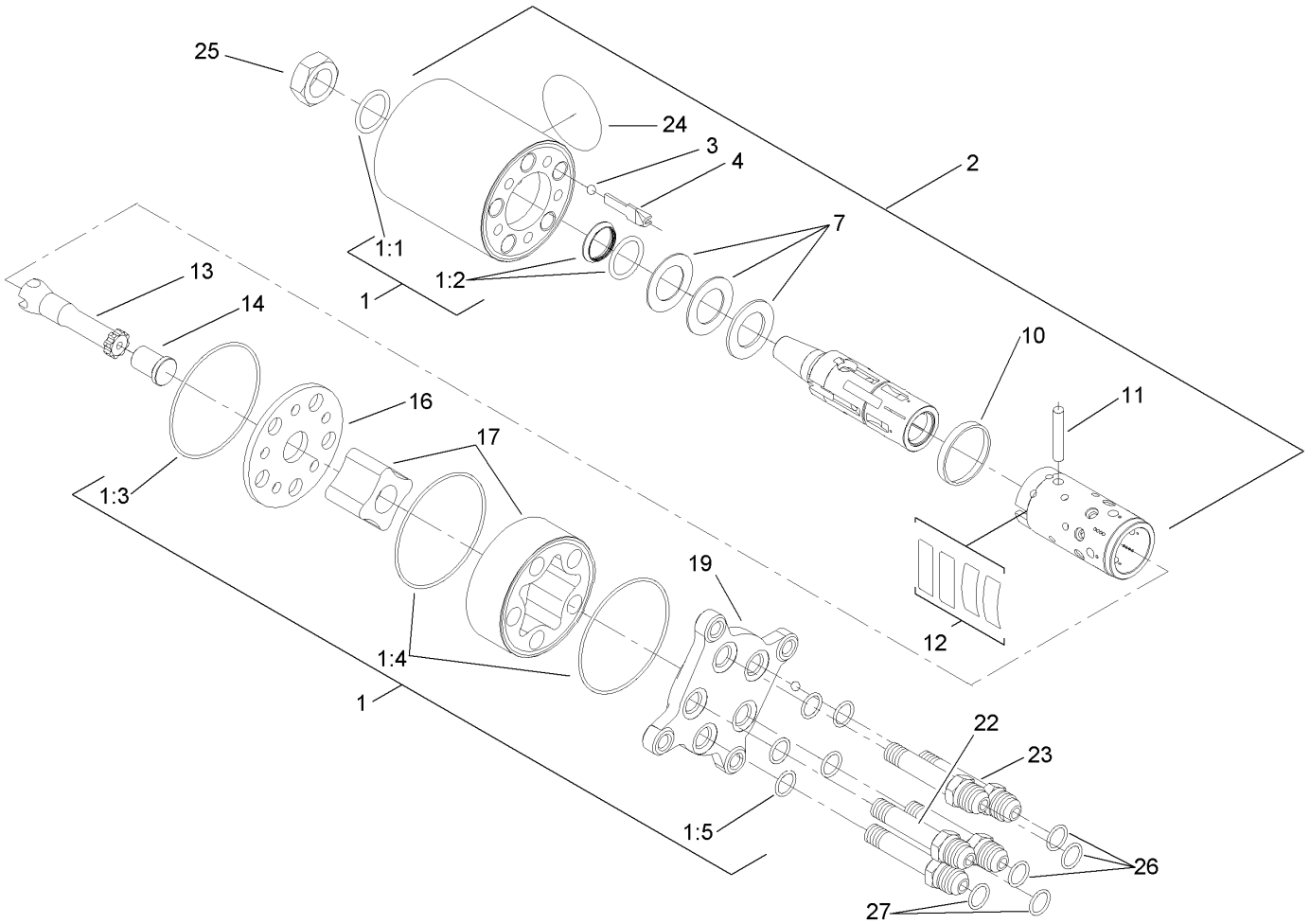

Steering Valve Assembly No. 121-7856

Ref.	Part Number	Qty.	Description
1	106-6716	1	Seal Kit
1:1		1	Ring-Seal, Dust ●
1:2		1	Seal-Shaft ●
1:3		1	O-Ring ●
1:4		2	O-Ring ●
1:5		5	O-Ring ●
2		1	Housing ●
3		1	Ball ●
4		1	Stop-Ball ●
7		1	Bearing ASM ●
10		1	Ring ●
11		1	Pin-Cross ●
12		1	Springs ●
13		1	Shaft ●
14		1	Spacer ●
16		1	Plate-Distributor ●
17		1	Gearwheel Set ●
19		1	Cover-End ●
22		1	Screw-Special ●
23		4	Screw-Special ●
24		1	Plate-Name ●
25	3296-33	1	Nut-Lock, NI
26	237-22	3	O-Ring
27	237-21	2	O-Ring

● Not serviced separately

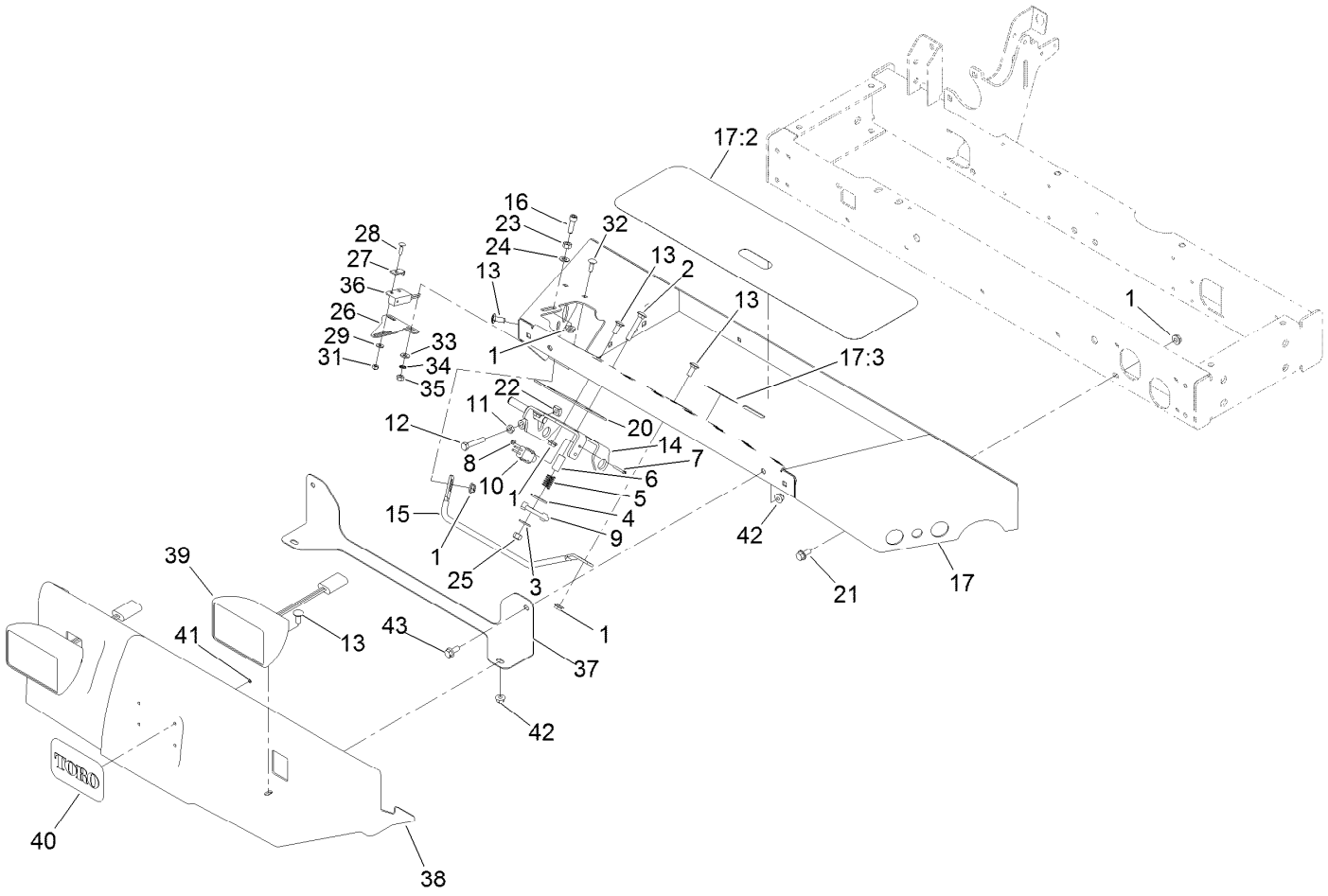

Front Shroud and Floorplate Assembly

Ref.	Part Number	Qty.	Description
1	32128-20	15	Nut-HF
2	3230-6	1	Bolt-CARR
3	3256-3	1	Washer-Flat
4	3256-40	1	Washer-Flat
5	65-9940	1	Spring
6	95-8866	1	Tube-Arm, Rocker
7	32105-9	2	Screw
8	3296-9	2	Nut-Hex
9	99-3593	1	Arm-Rocker
10	95-8900	1	Switch
11	3218-2	1	Nut-Hex Jam
12	322-41	1	Bolt-Hex,TAP
13	3230-23	6	Bolt-CARR
14	95-8869-03	1	Bracket-Pedal, Traction
15	95-8893	1	Bar-Deflector
16	3274-22	1	Screw-HSH
17	120-2189	1	Floorplate ASM
17:2	99-3478	1	Tread-Foot
17:3	99-3444	1	Decal-Mow / Transport
20	106-2661-01	1	Plate-Support
21	3234-5	10	Screw-HHF

Ref.	Part Number	Qty.	Description
22	99-3565	1	Nut-Square
23	3217-6	1	Nut-Hex
24	3256-23	1	Washer-Plain
25	3296-29	1	Nut-Lock, NI
26	100-4871	1	Bracket-Switch, Neutral
27	100-4872	1	Plate-Switch, Neutral
28	3229-20	1	Screw-CARR
29	3256-14	1	Washer-Flat
31	3296-2	1	Nut-Lock, NI
32	3229-1	2	Screw-CARR
33	3256-22	2	Washer-Flat
34	3255-7	2	Washer-Lock/EXT
35	3217-5	2	Nut-Hex
36	100-1270	1	Switch-Proximity
37	121-7822-03	1	Bracket-Head Light
38	121-7823	1	Shroud-Front
39	94-9024	2	Lamp ASM
40	93-6028	1	Plate-Logo
41	3254-9	4	Washer-Lock, Internal
42	104-8300	4	Nut-HF, NI
43	3234-47	2	Screw-HHF

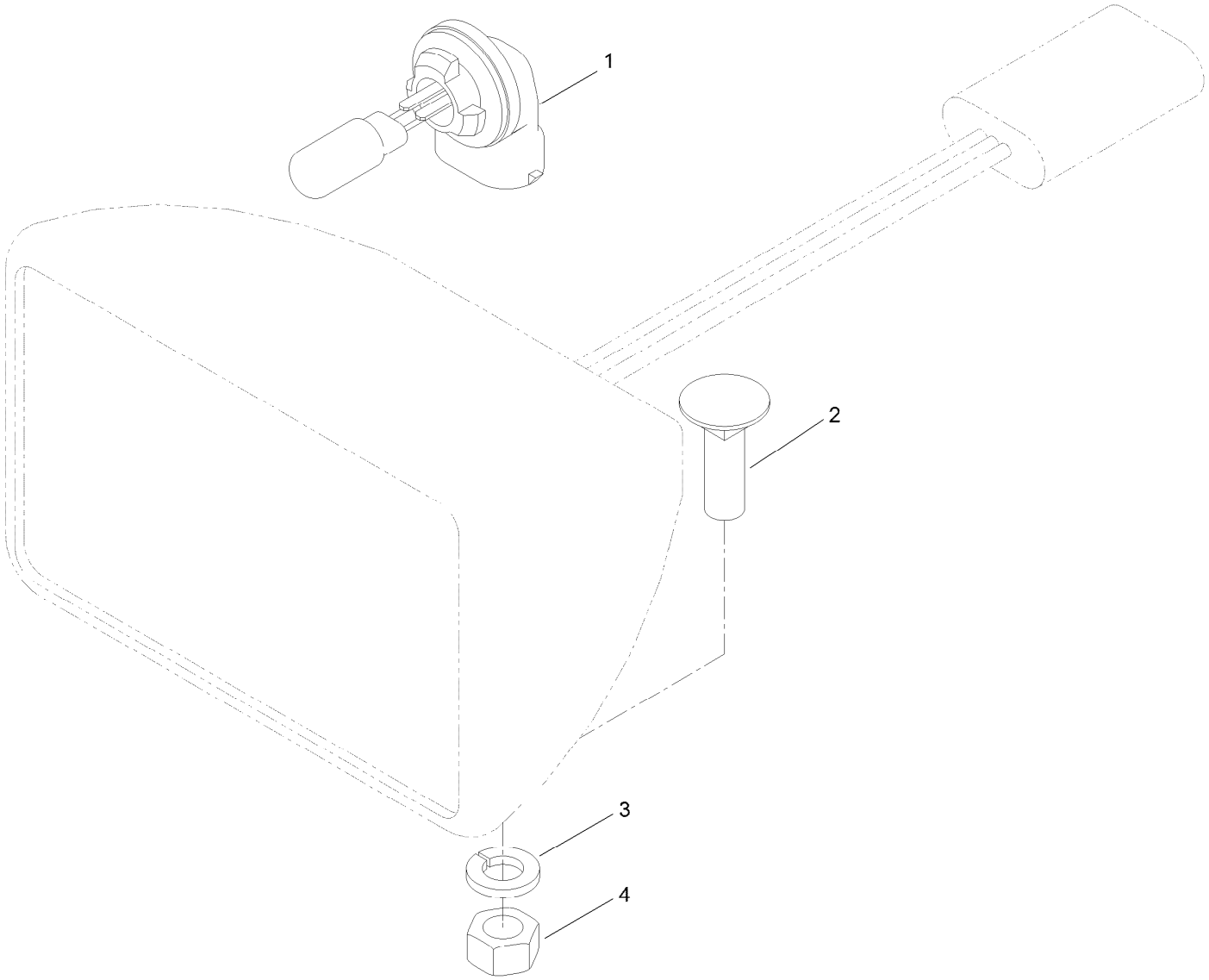

Lamp Assembly No. 94-9024

Ref.	*Part Number*	*Qty.*	*Description*
1	95-0909	1	Lamp-12 Volt
2	3230-28	1	Screw-CARR
3	3253-33	1	Washer-Lock
4	3217-6	1	Nut-Hex

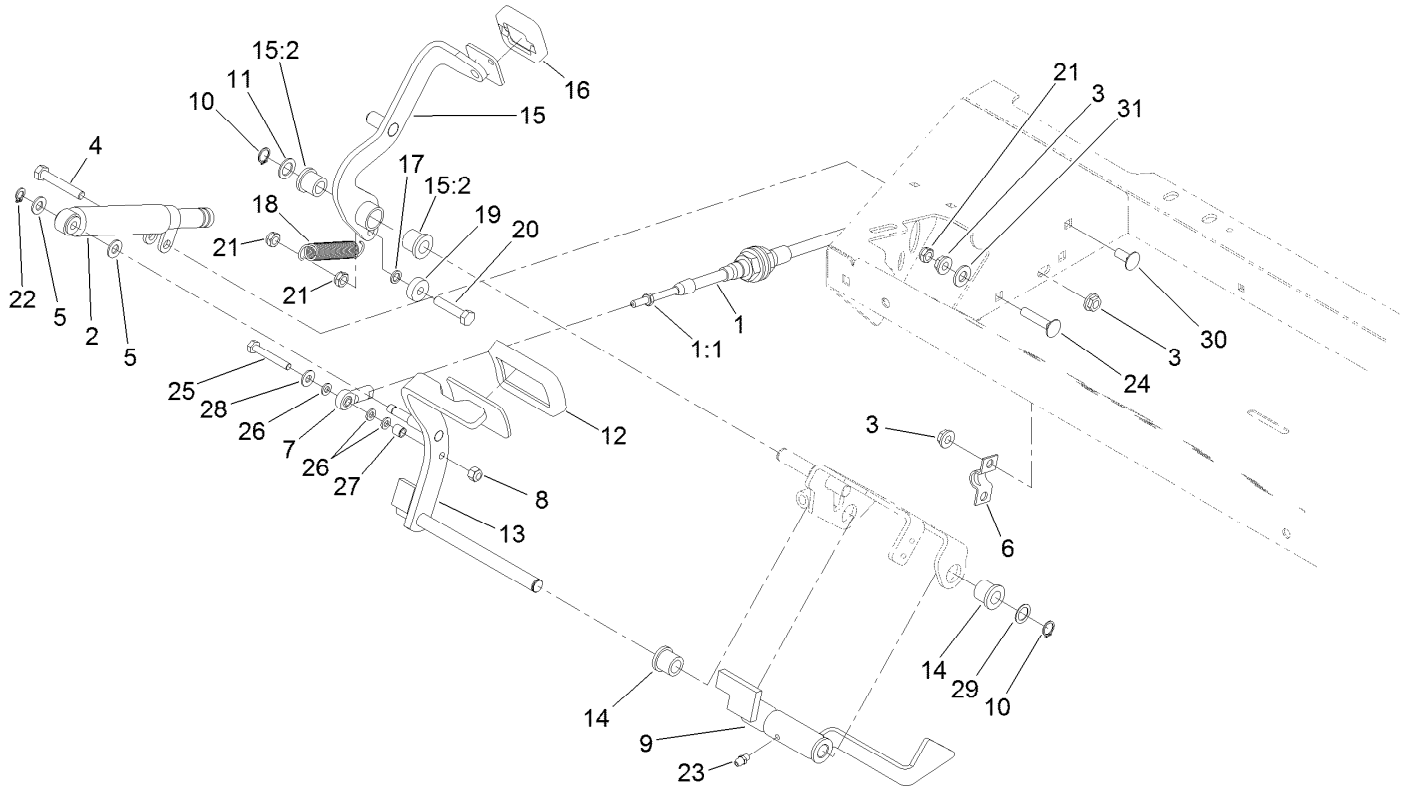

Traction Control Assembly

Ref.	Part Number	Qty.	Description
1	100-4815	1	Cable-Control, Traction
1:1	3220-1	2	Nut-Jam
2	76-8870	1	Damper-Lever
3	32128-20	4	Nut-HF
4	322-10	1	Screw-HH
5	3256-23	2	Washer-Plain
6	93-2092	1	Clamp-Cable
7	2411-41	1	Rod End-Ball Joint
8	3296-42	1	Nut-Lock, NI
9	95-8861	1	Slide
10	32151-84	2	Ring-Shaft, EXT
11	41-8440	1	Washer
12	74-9100	1	Pad-Pedal, Forward
13	104-4852-03	1	Pedal-Traction
14	256-243	2	Bearing-Flange
15	99-3379	1	Pedal-Reverse ASM
15:2	256-243	2	Bearing-Flange

Ref.	Part Number	Qty.	Description
16	74-9110	1	Pad-Pedal, Reverse
17	75-5470	1	Spacer-Bearing
18	99-3476	1	Spring-Extension
19	251-259	1	Bearing-Ball
20	322-7	1	Screw-HH
21	3296-47	3	Nut-Lock,NI
22	32151-3	1	Ring-Grip
23	302-5	1	Fitting-Grease
24	3230-27	1	Screw-CARR
25	321-10	1	Screw-HH
26	33093-00	3	Washer-Flat
27	99-3545	1	Spacer
28	3256-22	1	Washer-Flat
29	73-0040	4	Washer-Thrust
30	3230-23	2	Bolt-CARR
31	3256-24	1	Washer-Flat

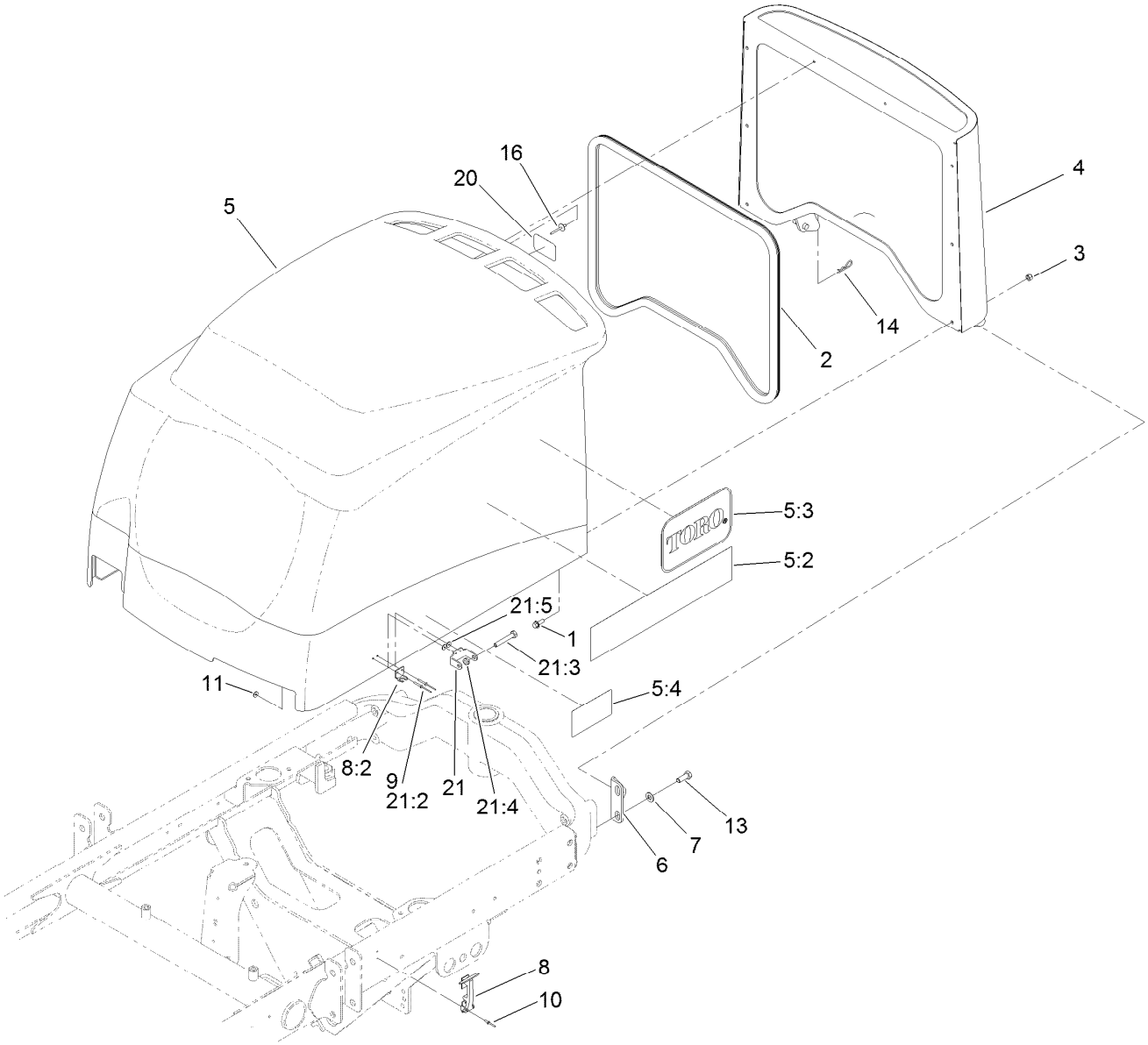

Hood and Screen Assembly

Ref.	Part Number	Qty.	Description
1	3234-4	6	Screw-HHF
2	100-4932	1	Trim-Seal
3	3296-42	6	Nut-Lock, NI
4	104-4853-03	1	Screen-Hood
5	121-7858	1	Hood ASM
5:2	120-2103	2	Decal-Hood
5:3	62-7400	2	Decal-Toro Logo
5:4	117-3270	1	Decal-Danger
6	95-8728	2	Bracket-Pivot, Hood
7	3256-24	8	Washer-Flat
8	59-9740	2	Flex Draw Latch ASM
8:2	249-40	1	Keeper

Ref.	Part Number	Qty.	Description
9	107-0333	4	Rivet-Pop
10	3290-55	4	Rivet-Pop
11	3269-10	4	Washer-Back
13	323-6	4	Screw-HH
14	3290-467	1	Pin-Hair
16	3269-21	2	Rivet-Pop
20	110-7135	1	Decal-Toro
21	119-2004	1	CE Latch Kit
21:2	107-0333	2	Rivet-Pop
21:3	322-10	1	Screw-HH
21:4	3296-47	1	Nut-Lock,NI
21:5	3269-10	2	Washer-Back

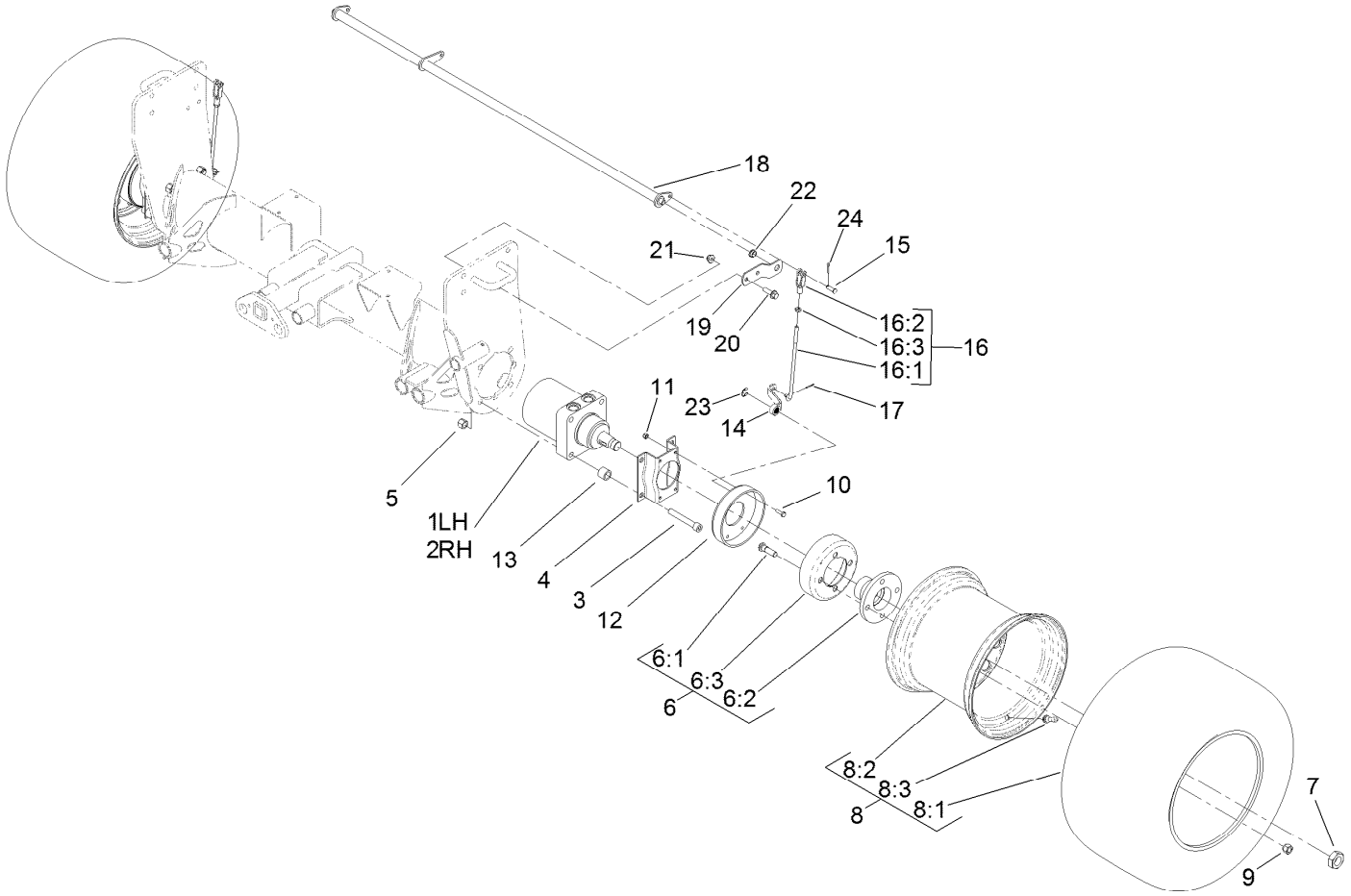

Wheel and Brake Assembly

Ref.	Part Number	Qty.	Description
1	110-8785	1	HYD Motor ASM (CCW)
2	110-8786	1	HYD Motor ASM (CW)
3	3274-100	8	Screw-HSH
4	84-2000-03	2	Bracket-Brake
5	3296-23	8	Nut-Lock, NI
6	17-8149	2	Wheel Hub ASM
6:1	85-6540	4	Stud-Drive
6:2	93-6838-03	1	Hub-Wheel
6:3	10-6850	1	Drum-Brake
7	26-3790	2	Nut-Lock
8		2	Tire ASM ●
8:1	120-2114	1	Tire-Smooth
8:2	120-2115	1	Wheel-12 Inch
8:3	232-27	1	Stem-Valve
9	242-50	8	Nut-Lug
10	321-5	8	Screw-HH
11	3296-42	8	Nut-Lock, NI

Ref.	Part Number	Qty.	Description
12	104-7705	2	Brake ASM
13	119-8238	8	Spacer-Deck Pulley
14	114-2726	2	Lever-Brake
15	283-1	2	Pin-Clevis
16	120-2068	2	Brake Lever ASM
16:1	120-2067	1	Rod-Brake
16:2	1-303105	1	Yoke-Adjustable
16:3	3220-2	1	Nut-Jam
17	3272-6	2	Pin-Cotter
18	104-4625-03	1	Shaft-Pivot, Brake
19	95-8683	2	Bracket-Pivot, Brake
20	3234-11	4	Screw-HHF
21	104-8301	4	Nut-HF, NI
22	256-156	2	Bushing-Flange
23	104-7706	2	E-Ring, Bowed
24	3272-10	2	Pin-Cotter

● Not serviced separately

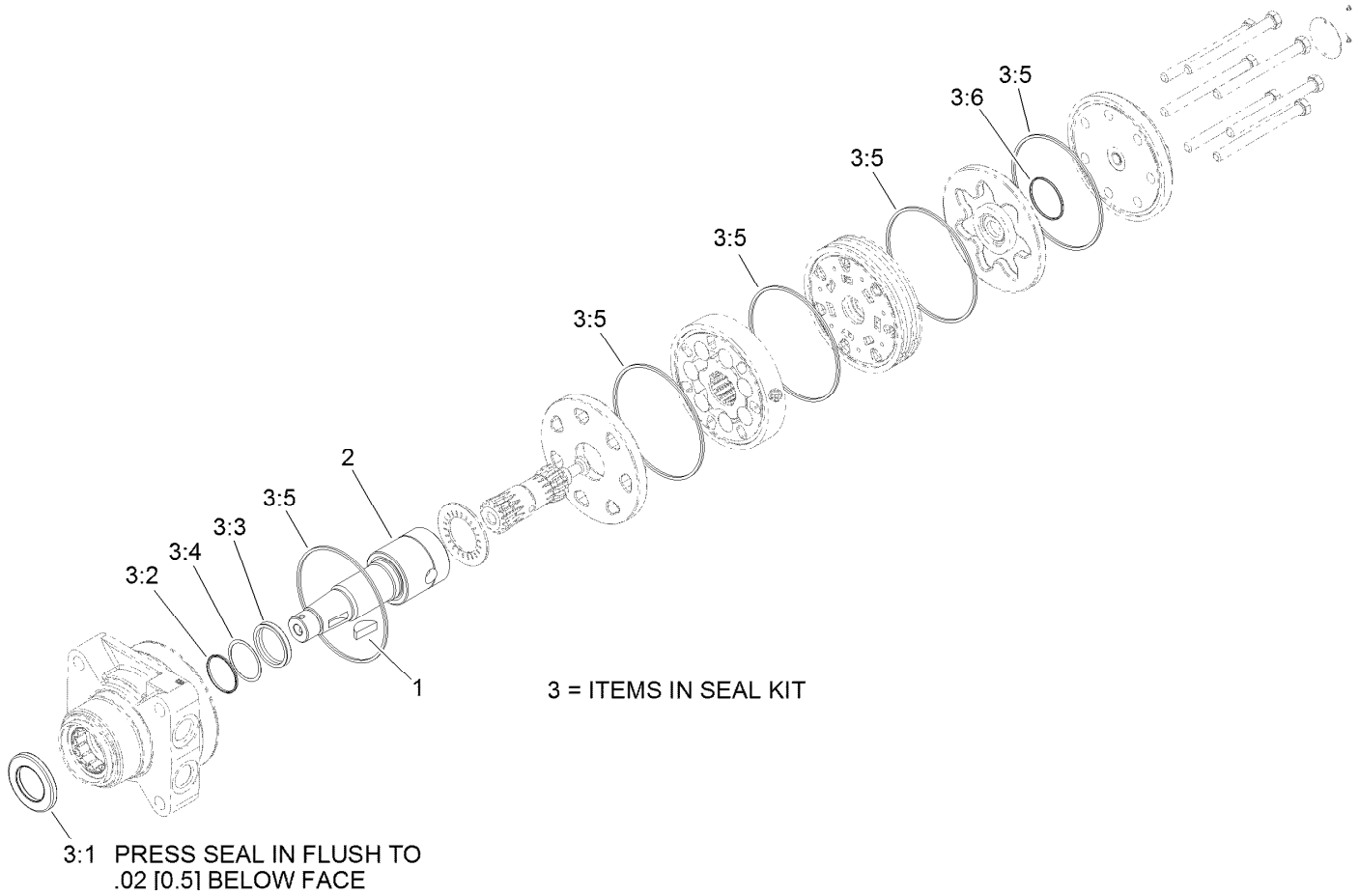

Hydraulic Motor Assembly No. 110-8785

Ref.	*Part Number*	*Qty.*	*Description*
1	3257-42	1	Key-Woodruff
2	99-3090	1	Shaft-Coupling
3	94-8178	1	Seal Kit
3:1		1	Seal-Dirt And Water ●
3:2		1	Backup-Ring ●
3:3		1	Seal-Shaft ●
3:4		1	Washer-Backup ●
3:5		5	Seal-Square, Ring (Inner) ●
3:6		1	Seal-Commutator ●

● Not serviced separately

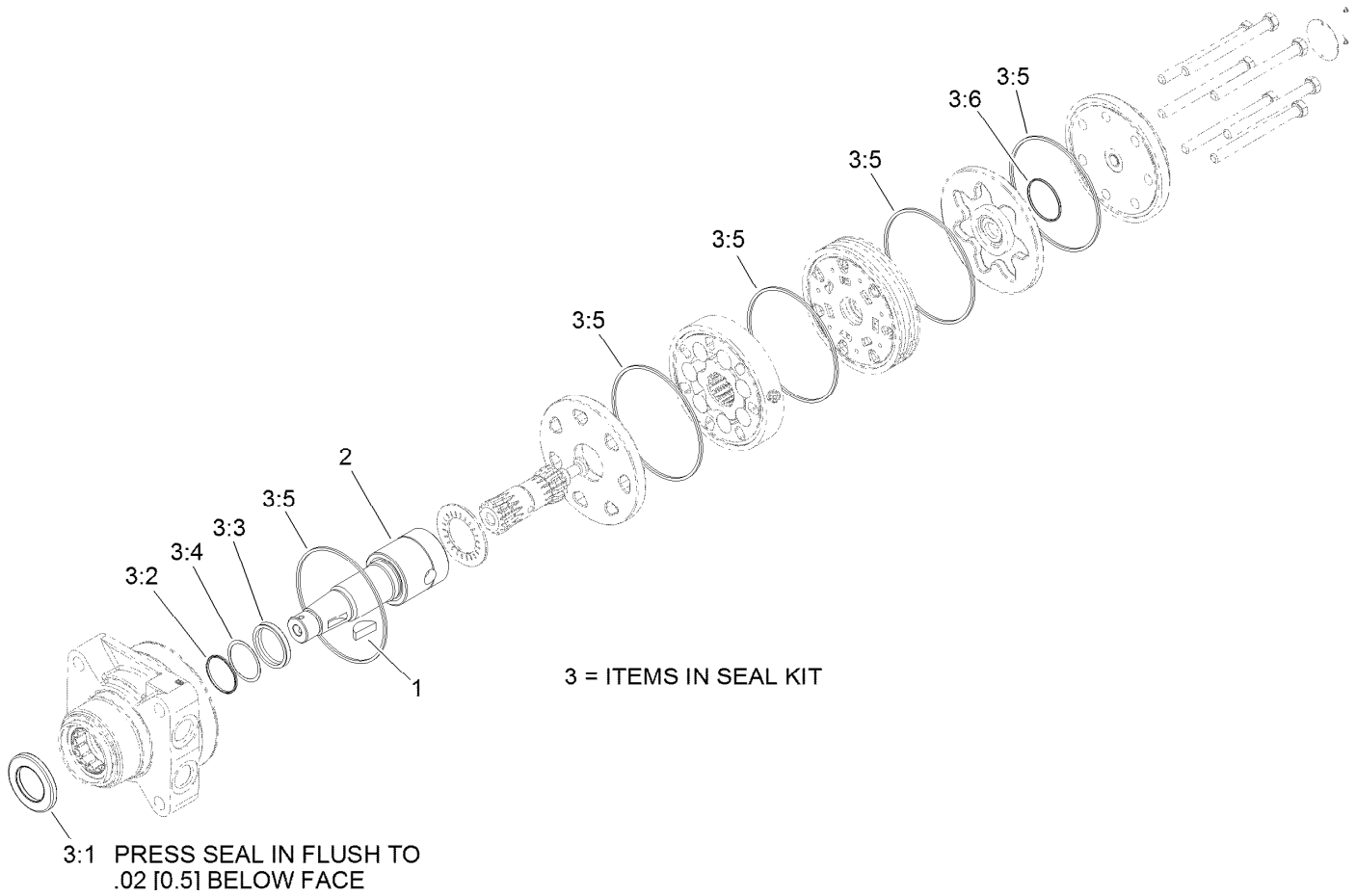

Hydraulic Motor Assembly No. 110-8786

Ref.	*Part Number*	*Qty.*	*Description*
1	3257-42	1	Key-Woodruff
2	99-3090	1	Shaft-Coupling
3	94-8178	1	Seal Kit
3:1		1	Seal-Dirt And Water ●
3:2		1	Backup-Ring ●
3:3		1	Seal-Shaft ●
3:4		1	Washer-Backup ●
3:5		5	Seal-Square, Ring (Inner) ●
3:6		1	Seal-Commutator ●

● Not serviced separately

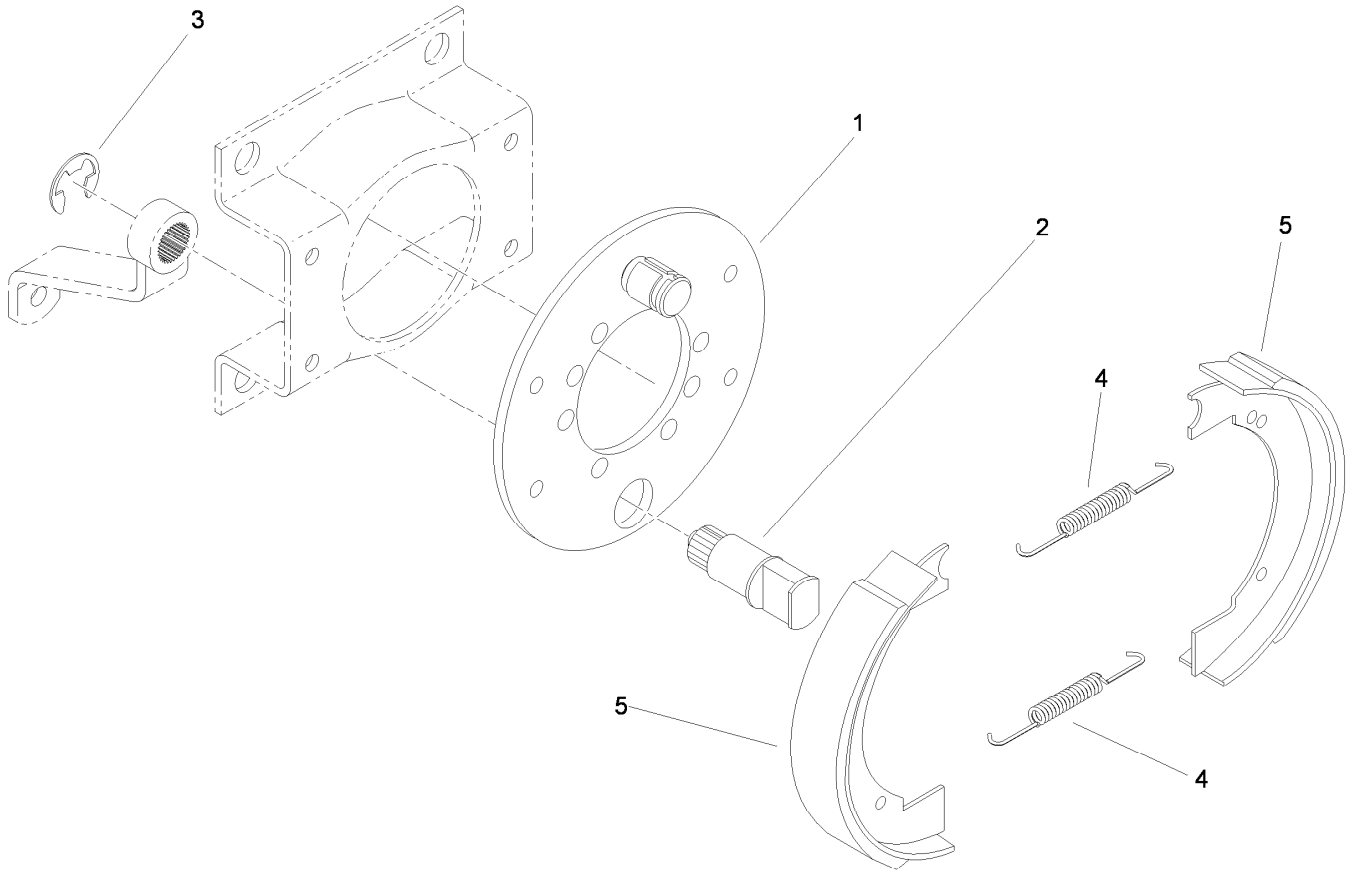

Brake Assembly No. 104-7705

Ref.	*Part Number*	*Qty.*	*Description*
1	70-9870	1	Plate-Backing
2	104-7707	1	Shaft-Cam, Brake
3	104-7706	1	E-Ring, Bowed
4	70-9880	2	Spring-Return
5	70-9840	2	Shoe-Brake

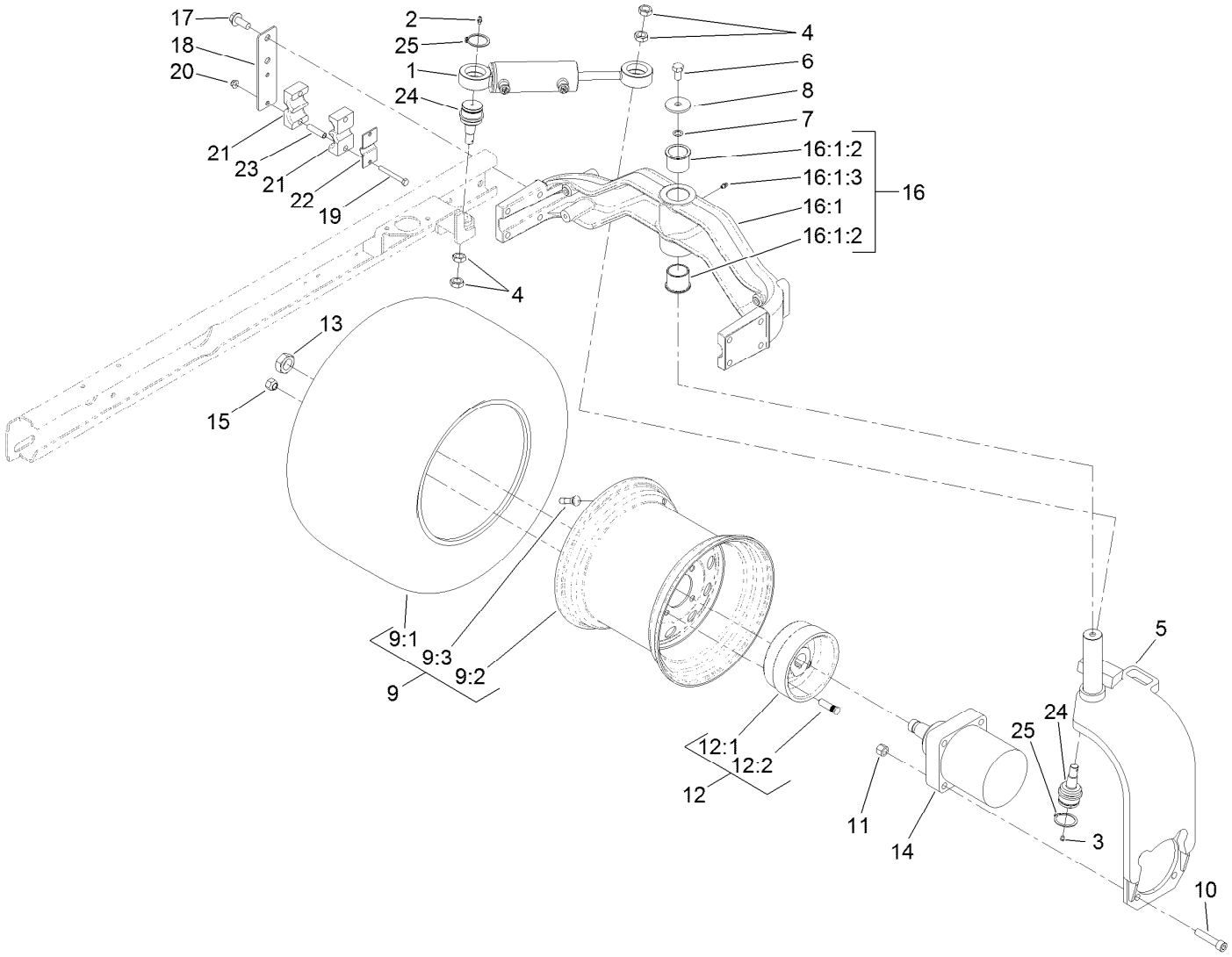

Rear Fork and Casting Assembly

Ref.	Part Number	Qty.	Description
1	121-7835	1	Steering Cylinder ASM
2	302-5	1	Fitting-Grease
3	302-59	1	Plug-EXT Hex Spl
4	3220-6	4	Nut-Jam
5	120-2144-01	1	Fork-Rear
6	325-3	1	Screw-HH
7	3255-2	1	Washer-Lock, EXT
8	75-7730	1	Washer-Thrust
9		1	Tire ASM ●
9:1	120-2114	1	Tire-Smooth
9:2	120-2115	1	Wheel-12 Inch
9:3	232-27	1	Stem-Valve
10	3274-71	4	Screw-HSH
11	3296-23	4	Nut-Lock, NI
12		1	Hub And Wheel ASM ●
12:1	103-0589	1	Hub-Wheel
12:2	1-633926	4	Stud-Wheel

Ref.	Part Number	Qty.	Description
13	26-3790	1	Nut-Lock
14	95-8694	1	HYD Motor ASM
15	242-50	4	Nut-Lug
16	107-7828-03	1	Casting-Rear
16:1		1	Rear Casting ASM ●
16:1:2	95-8805	2	Bushing
16:1:3	302-5	1	Fitting-Grease
17	3234-38	8	Screw-HHF
18	121-7805-03	1	Bracket-Clamp, Hose
19	322-13	2	Screw-HH
20	104-8300	2	Nut-HF, NI
21	82-8170	2	Clamp
22	93-7961	1	Clamp-Drain, Case
23	93-7960	2	Spacer
24	106-6774	2	Joint-Ball
25	32151-104	2	Ring-Retaining, External

● Not serviced separately

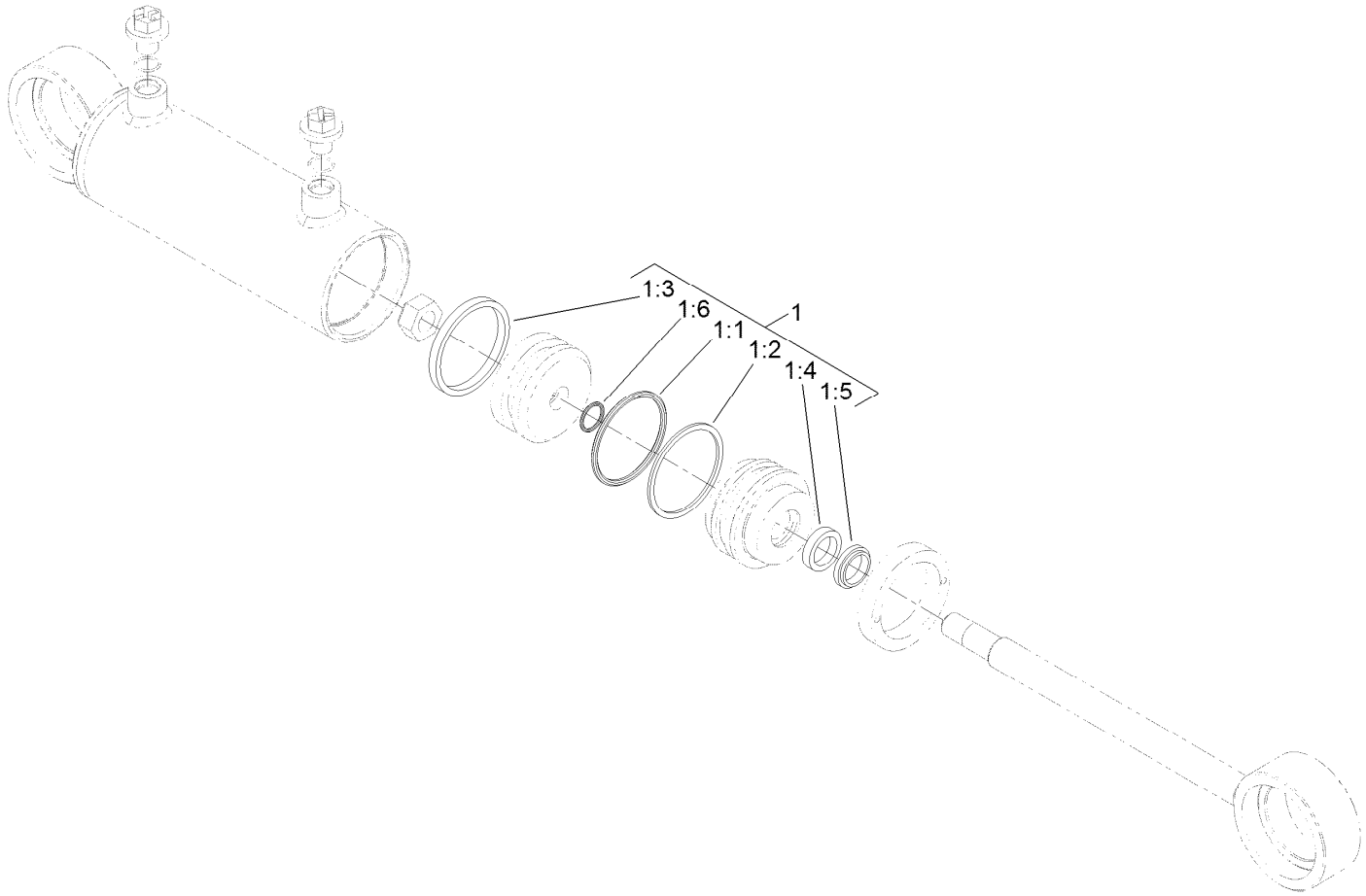

Steering Cylinder Assembly No. 121-7835

Ref.	*Part Number*	*Qty.*	*Description*
1	121-7844	1	Kit-Seal
1:1		1	O-Ring ●
1:2		1	Backup ●
1:3		1	Psp Seal ●
1:4		1	Bs Seal ●
1:5		1	Dust Seal-Dt ●
1:6		1	O-Ring ●

● Not serviced separately

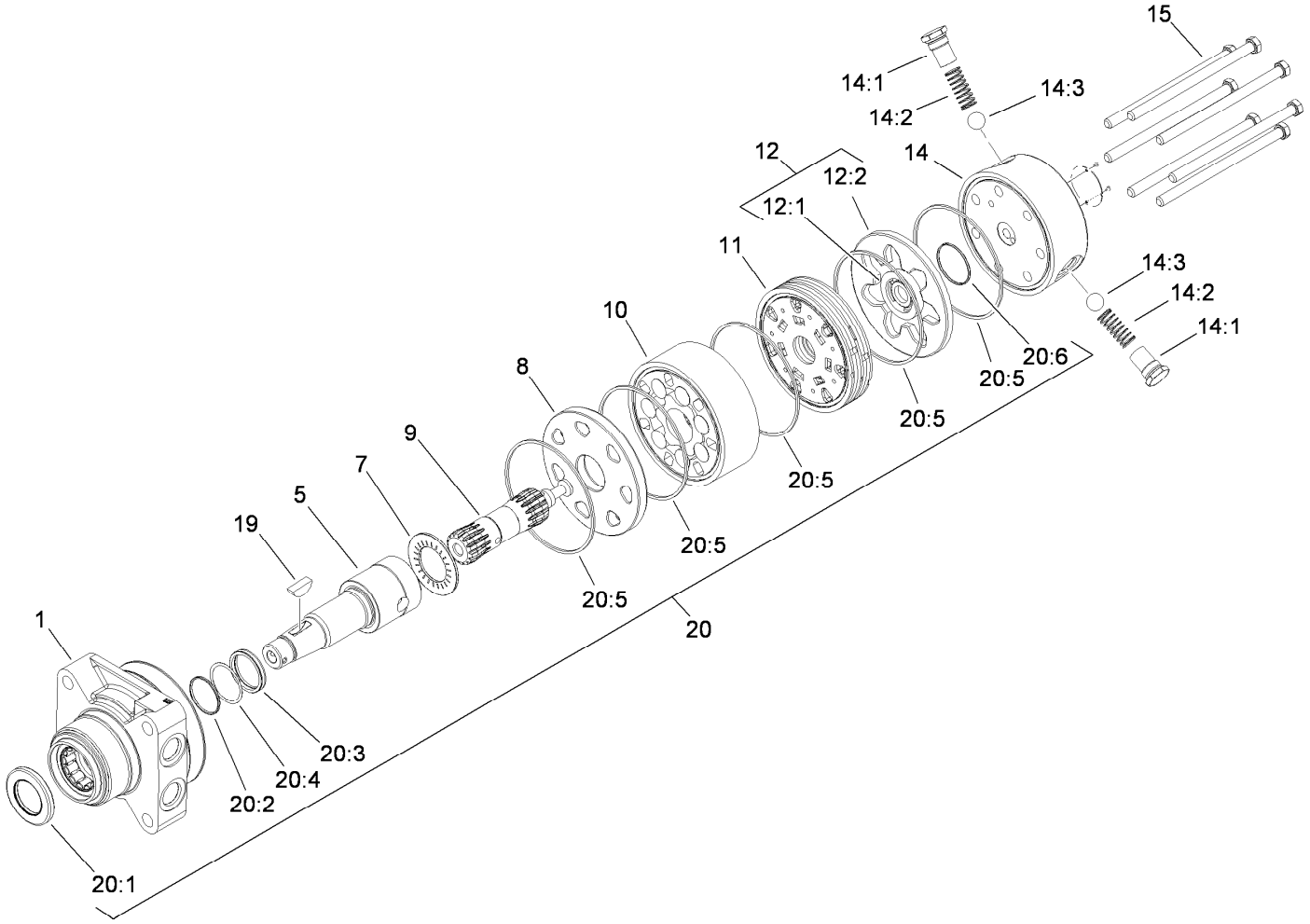

Hydraulic Motor Assembly No. 95-8694

Ref.	Part Number	Qty.	Description
1	76-0810	1	Housing ASM
5	99-3090	1	Shaft-Coupling
7	76-0850	1	Bearing-Thrust
8	76-0870	1	Plate-Wear
9	99-3537	1	Link-Drive
10	99-3539	1	Set-Rotor
11	99-3535	1	Manifold
12	76-0880	1	Commutator ASM
12:1		1	Commutator ●
12:2		1	Ring-Commutator ●
14	99-3538	1	End Cover ASM
14:1		1	Spring Cap And O-Ring ASM ●

Ref.	Part Number	Qty.	Description
14:2	99-3541	1	Spring
14:3	99-3540	1	Ball
15	99-3536	7	Screw-HH
19	3257-42	1	Key-Woodruff
20	94-8178	1	Seal Kit
20:1		1	Seal-Dirt And Water ●
20:2		1	Backup-Ring ●
20:3		1	Seal-Shaft ●
20:4		1	Washer-Backup ●
20:5		5	Seal-Square, Ring (Inner) ●
20:6		1	Seal-Commutator ●

● Not serviced separately

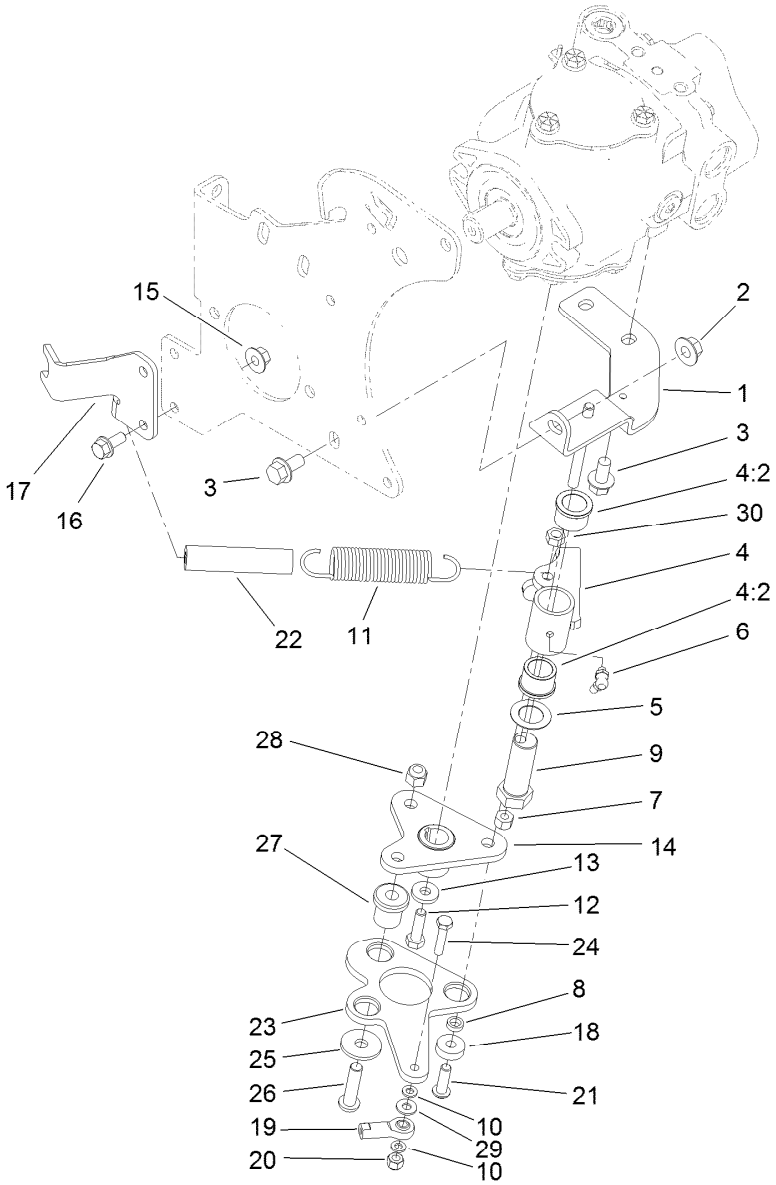

Neutral Arm Assembly

Ref.	Part Number	Qty.	Description
1	95-8960-03	1	Bracket-Neutral
2	32128-43	1	Nut-Flange
3	3234-1	3	Screw-HHF
4	104-0422	1	Neutral Arm ASM
4:2	256-113	2	Bushing-Flange
5	3-6498	1	Washer-Thrust
6	302-60	1	Fitting-Grease
7	3296-29	1	Nut-Lock, NI
8	100-4817	1	Spacer
9	76-8640	1	Stud-Traction
10	33093-00	2	Washer-Flat
11	94-1369	1	Spring-Extension
12	3210-6	1	Screw-HH
13	88-7200	1	Washer-Flat
14	120-5566	1	Hub
15	32128-44	2	Nut
16	3234-5	2	Screw-HHF
17	104-0464-03	1	Bracket-Support, Cable
18	251-259	1	Bearing-Ball
19	2411-41	1	Rod End-Ball Joint
20	3296-42	1	Nut-Lock, NI
21	3274-104	1	Screw-HSBH
22	99-3556	1	Hose
23	99-3594-03	1	Lever-Pump
24	321-8	1	Screw-HH
25	2844	3	Washer
26	95-3857	3	Screw-HSBH
27	63-9750	3	Mount
28	3296-39	3	Nut-Lock, NI
29	3256-22	1	Washer-Flat
30	32153-3	1	Nut-Hex, Side Deform

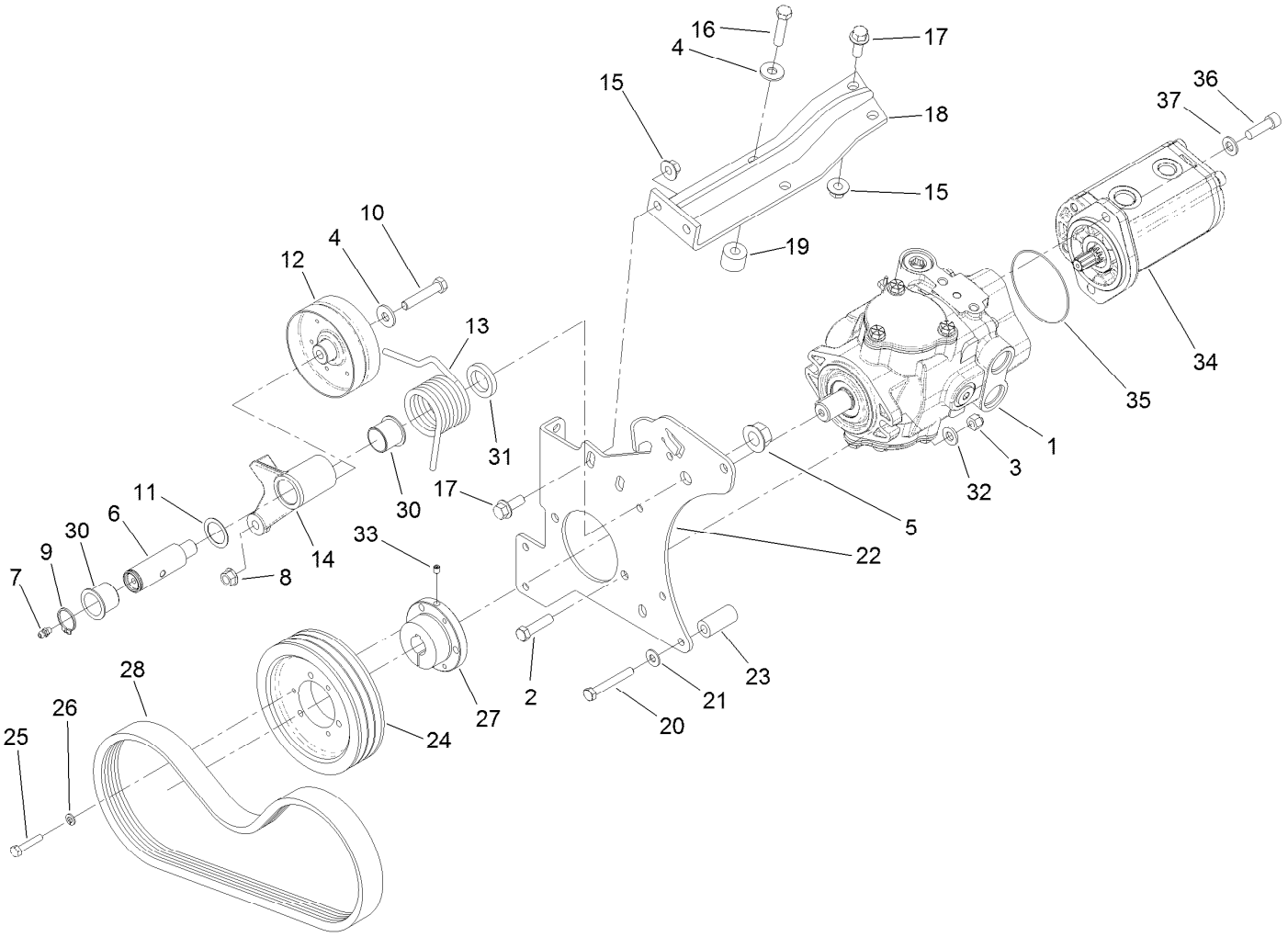

Piston Pump and Gear Pump Assembly

Ref.	Part Number	Qty.	Description
1	104-4890	1	Piston Pump ASM
2	323-8	2	Screw-HH
3	3296-39	2	Nut-Lock, NI
4	80-6990	2	Washer-Hardened
5	32128-54	1	Nut-HF
6	99-3624	1	Shaft-Pivot, Idler
7	302-5	1	Fitting-Grease
8	32128-21	1	Nut-HF Lock
9	32151-36	1	Ring-Retaining
10	323-10	1	Screw-HH
11	74-1810	1	Washer
12	107-7834	1	Pulley-Idler
13	115-3488	1	Spring-Torsion
14	99-3623-03	1	Arm-Idler
15	32128-43	4	Nut-Flange
16	323-19	2	Screw-HH
17	3234-11	4	Screw-HHF
18	99-3436-03	1	Support-Pump

Ref.	Part Number	Qty.	Description
19	99-3440	2	Spacer
20	33114-060	4	Screw-HH
21	87-8640	3	Washer-Flat
22	95-8933-03	1	Plate-Mount, Pump
23	95-8941	4	Spacer-Mount, Pump
24	99-3620	1	Pulley-3V, Pump
25	321-13	3	Screw-HH
26	3253-3	3	Washer-Lock
27	100-4813	1	Bushing-Lock, Taper
28	99-3619	1	Belt-3V
30	99-3631	2	Bushing-Flange
31	99-3625	1	Spacer-Arm, Idler
32	100-4852	2	Washer-Hardened
33	3245-7	1	Screw-Set
34	121-7841	1	HYD Gear Pump ASM
35	60-3520	1	O-Ring
36	323-7	2	Screw-HH
37	3256-24	4	Washer-Flat

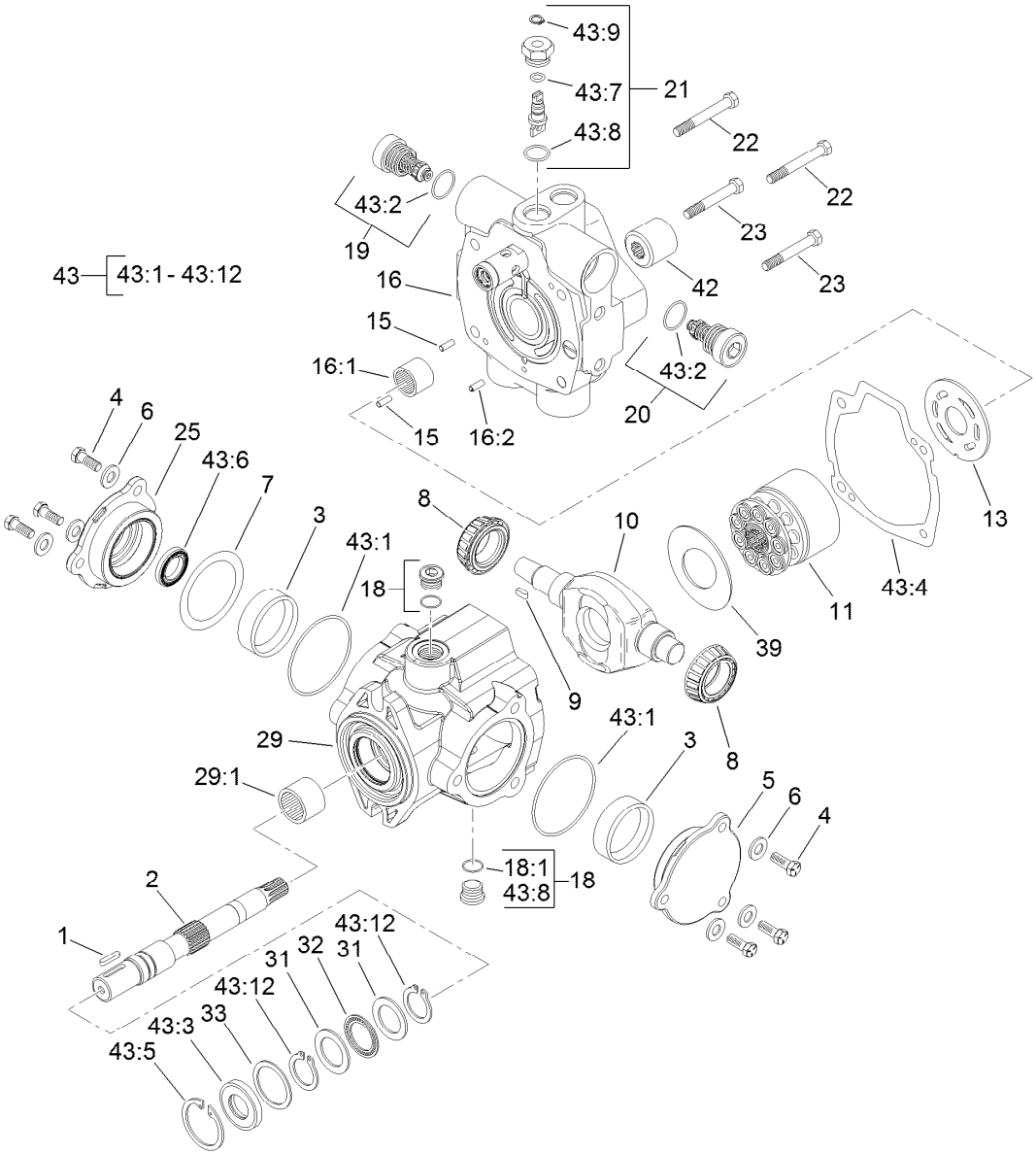

Hydraulic Pump Assembly No. 104-4890

Ref.	Part Number	Qty.	Description
1	94-3645	1	Key
2	94-6359	1	Shaft-Drive
3	104-4046	2	Bearing-Cup
4	98-4640	6	Screw-Cap
5	98-4644	1	Plate-Cover
6	105-9762	6	Washer
7	100-3182	2	Shim Kit
8	98-4639	2	Bearing-Cone
9	94-3646	1	Key
10	104-4888	1	Swashplate
11	76-6070	1	Rotating Kit
13	104-0429	1	Plate-Valve
15	76-6150	2	Pin-Dowel
16	105-3813	1	Endcover Sub ASM
16:1	94-6368	1	Bearing
16:2		1	Pin-Roll ■
18	74-9280	2	Plug ASM
18:1		1	O-Ring ■

Ref.	Part Number	Qty.	Description
19	104-4889	1	Relief Valve ASM
20	105-3812	1	Valve-Check
21	105-3811	1	Valve-Bypass
22	76-6170	2	Capscrew
23	76-6160	2	Capscrew
25	98-4645	1	Plate-Cover
29	100-3176	1	Housing ASM
29:1	94-6363	1	Bearing
31	252-71	2	Washer-Thrust
32	252-66	1	Bearing-Thrust
33	33-3720	1	Washer
39	98-4635	1	Insert-Plate, Cam
42	74-9040	1	Coupler
43	120-5754	1	Seal Kit
43:1		2	O-Ring ■
43:2		2	O-Ring ■
43:3		1	Seal-Shaft ■
43:4		1	Gasket ■

● Not illustrated

■ Not serviced separately

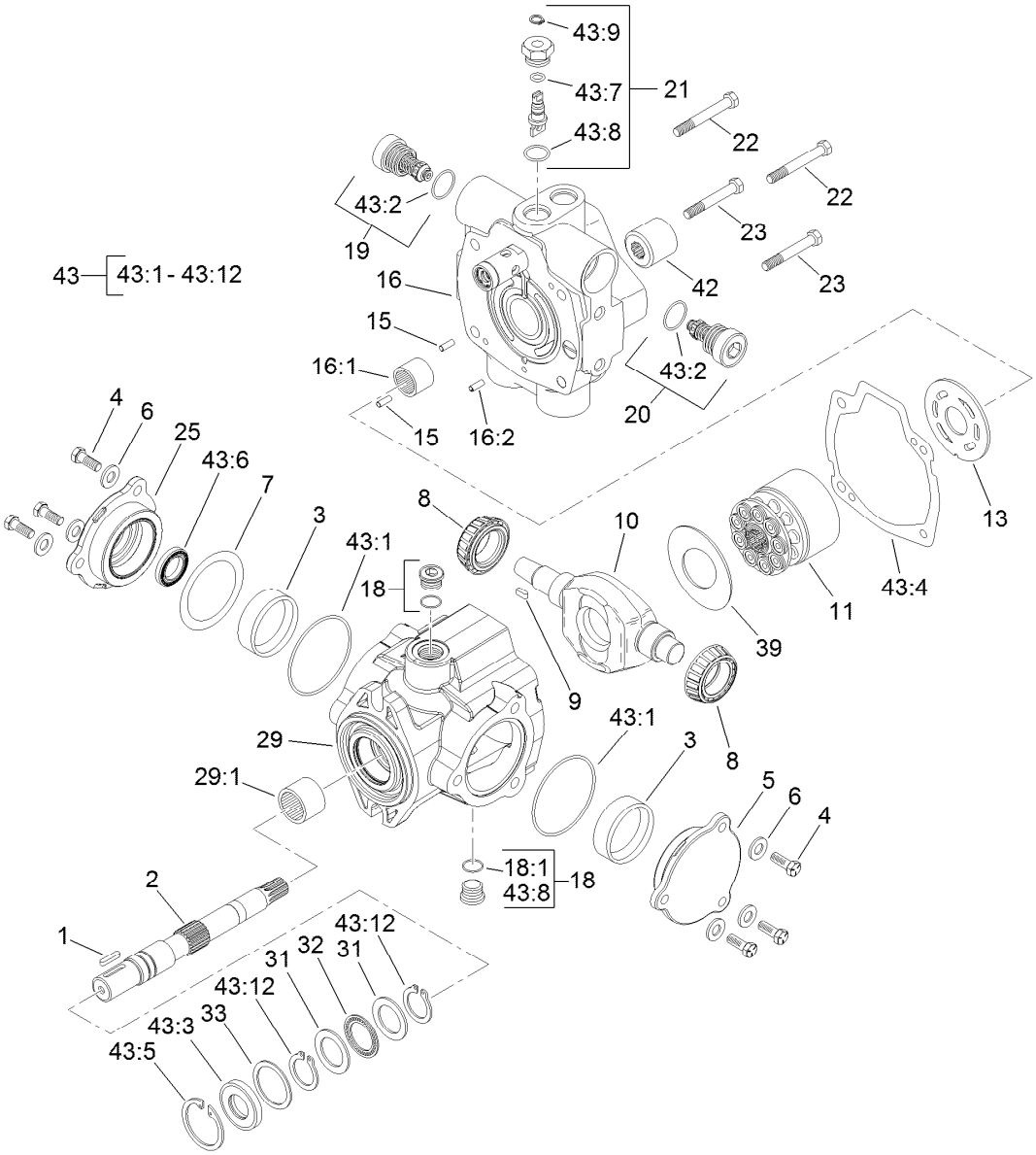

Hydraulic Pump Assembly No. 104-4890 (continued)

Ref.	Part Number	Qty.	Description
43:5		1	Ring-Retaining ■
43:6		1	Seal-Shaft ■
43:7		1	O-Ring ■
43:8		5	O-Ring ■
43:9		1	Ring-Retaining ■

Ref.	Part Number	Qty.	Description
43:10		1	O-Ring ● ■
43:11		1	O Ring-Molded ● ■
43:12		2	Ring-Retaining ■
43:13		1	O-Ring ■

● Not illustrated

■ Not serviced separately

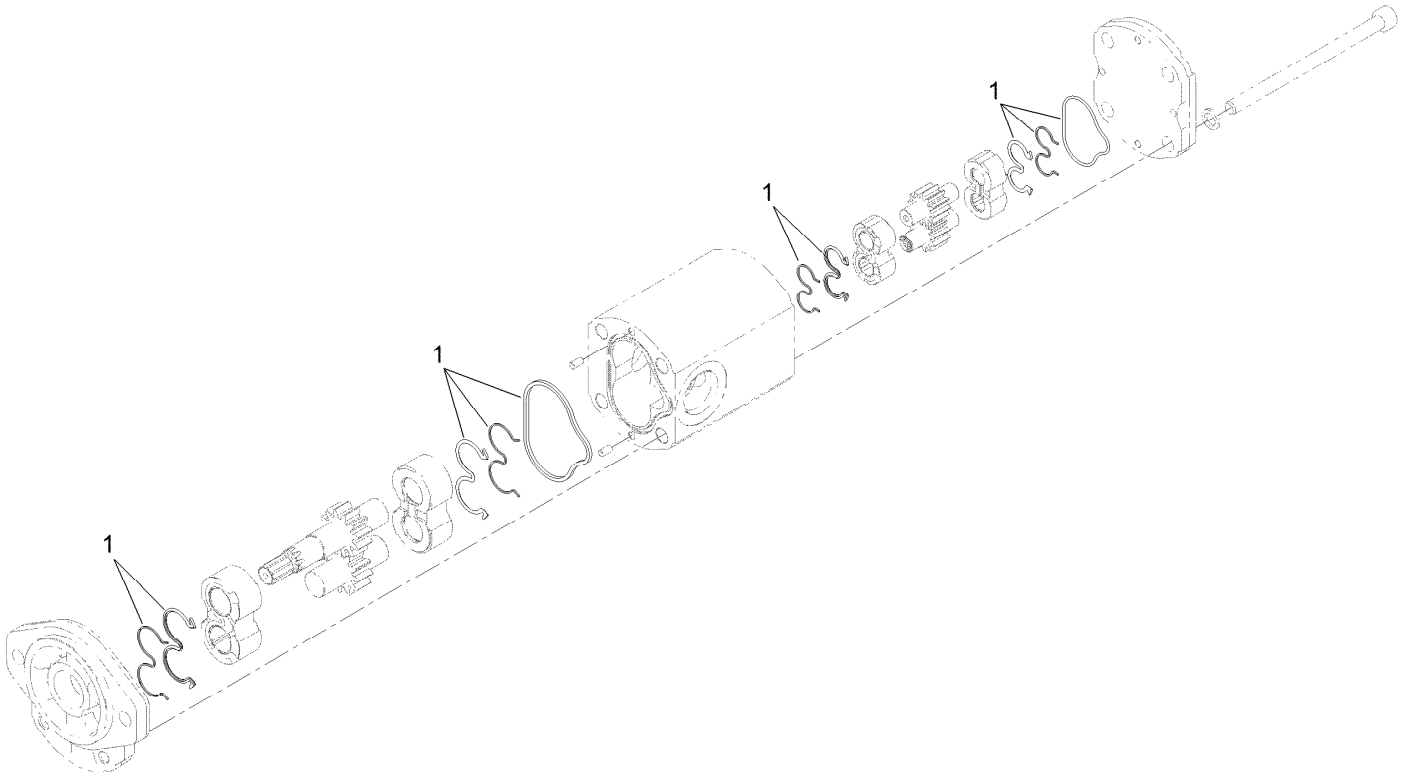

Hydraulic Gear Pump Assembly No. 121-7841

Ref.	*Part Number*	*Qty.*	*Description*
1	119-7134	1	Kit-Seal

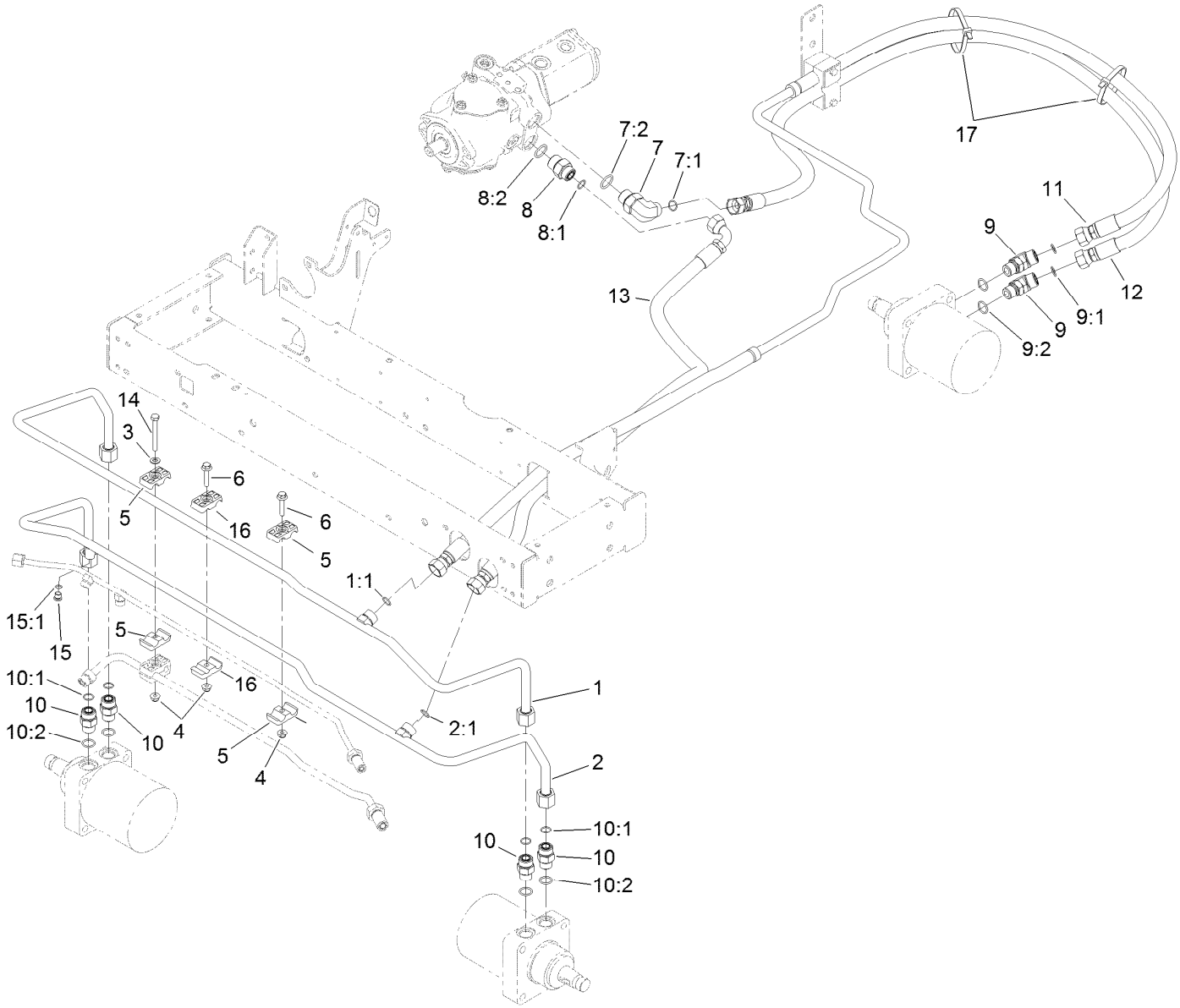

Traction Hydraulic Assembly

Ref.	Part Number	Qty.	Description
1	120-2085	1	Tube-HYD
1:1	237-65	1	O-Ring
2	120-2086	1	Tube-HYD
2:1	237-65	1	O-Ring
3	3256-23	1	Washer-Plain
4	104-8300	3	Nut-HF, NI
5	56-7971	4	Clamp-Tube
6	115-1794	2	Screw-HHF
7	340-139	1	Fitting-Elbow 90
7:1	237-81	1	O-Ring
7:2	237-65	1	O-Ring
8	340-8	1	Fitting-Straight
8:1	237-65	1	O-Ring
8:2	237-81	1	O-Ring

Ref.	Part Number	Qty.	Description
9	340-14	2	Fitting-HYD, 45 DEG
9:1	237-65	1	O-Ring
9:2	237-80	1	O-Ring
10	340-7	4	Fitting-Straight
10:1	237-65	1	O-Ring
10:2	237-80	1	O-Ring
11	121-7848	1	HYD Tube ASM
12	105-1212	1	Hose-HYD
13	121-7839	1	Hose ASM
14	322-13	1	Screw-HH
15	353-990	1	Plug ASM
15:1	237-78	1	O-Ring
16	56-7970	2	Clamp-Tube
17	3334-945	2	Tie-Cable

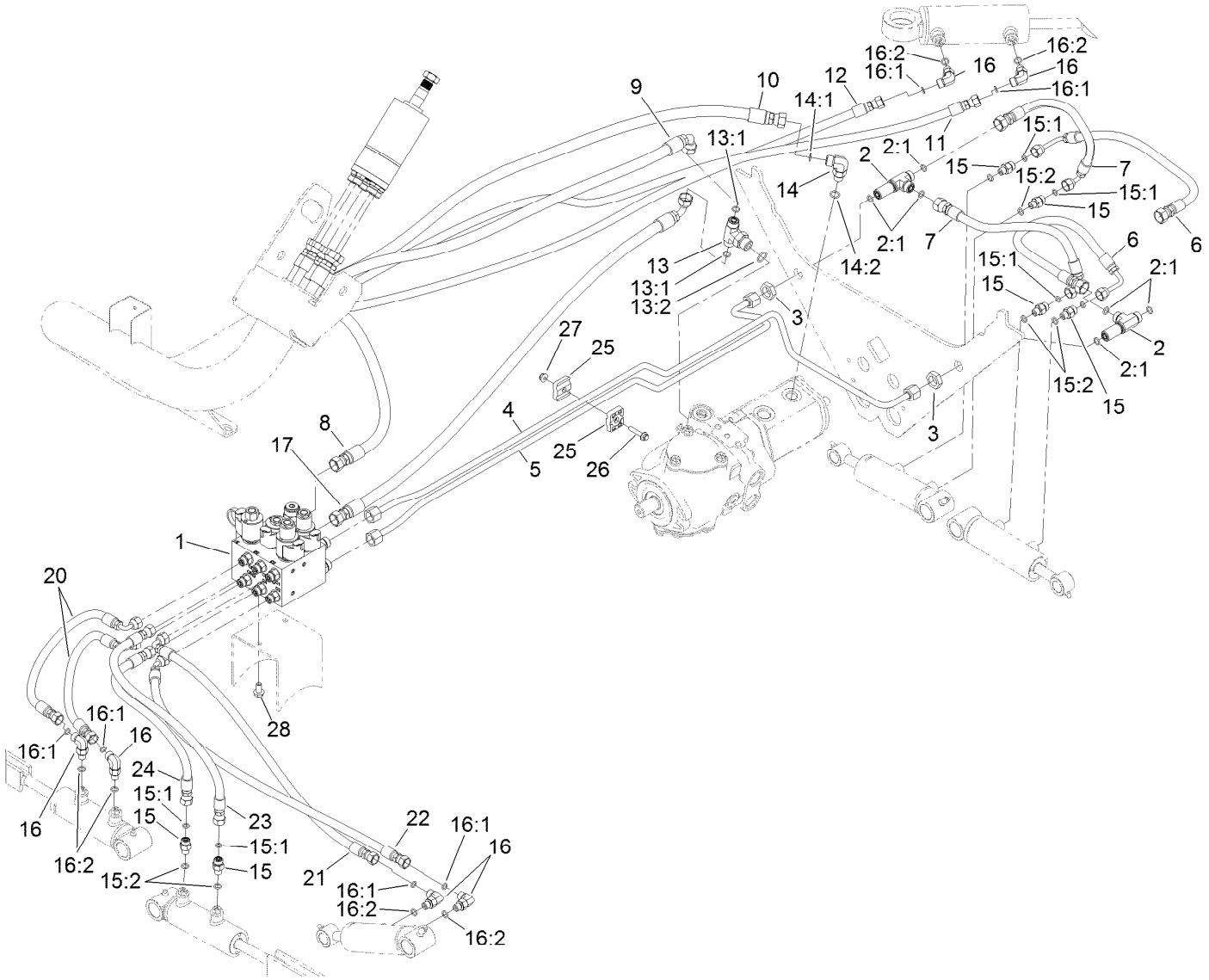

Lift Manifold and Steering Circuit Assembly

Ref.	Part Number	Qty.	Description
1	120-2057	1	Lift Manifold ASM
2	340-68	2	Fitting-Tee, Bulkhead
2:1	237-22	3	O-Ring
3	340-70	2	Nut-Lock
4	121-7806	1	Tube-HYD
5	121-7807	1	Tube-HYD
6	121-7813	2	Hose-HYD
7	119-2065	2	Hose-HYD
8	120-2060	1	Hose-HYD
9	120-2061	1	Hose-HYD
10	119-2067	1	Hose-HYD
11	121-7836	1	Hose-HYD
12	108-5673	1	Hose-HYD
13	92-4799	1	Fitting-Tee, HYD
13:1	237-79	1	O-Ring
13:2	237-22	2	O-Ring
14	340-18	1	Fitting-HYD, 90 DEG
14:1	237-79	1	O-Ring
14:2	237-22	1	O-Ring
15	340-92	6	Fitting-Straight
15:1	237-78	1	O-Ring
15:2	237-21	1	O-Ring
16	340-132	6	Fitting-Elbow, 90 DEG
16:1	237-78	1	O-Ring
16:2	237-21	1	O-Ring
17	93-5386	1	Hose ASM
20	119-4594	2	Hose-HYD
21	105-4347	1	Hose-HYD
22	106-7974	1	Hose-HYD
23	121-7847	1	Hose-HYD
24	112-9193	1	Hose-HYD
25	56-7973	2	Clamp-Tube
26	3234-21	1	Screw-HHF
27	104-7201	1	Nut-HF, NI
28	3234-7	2	Screw-HHF

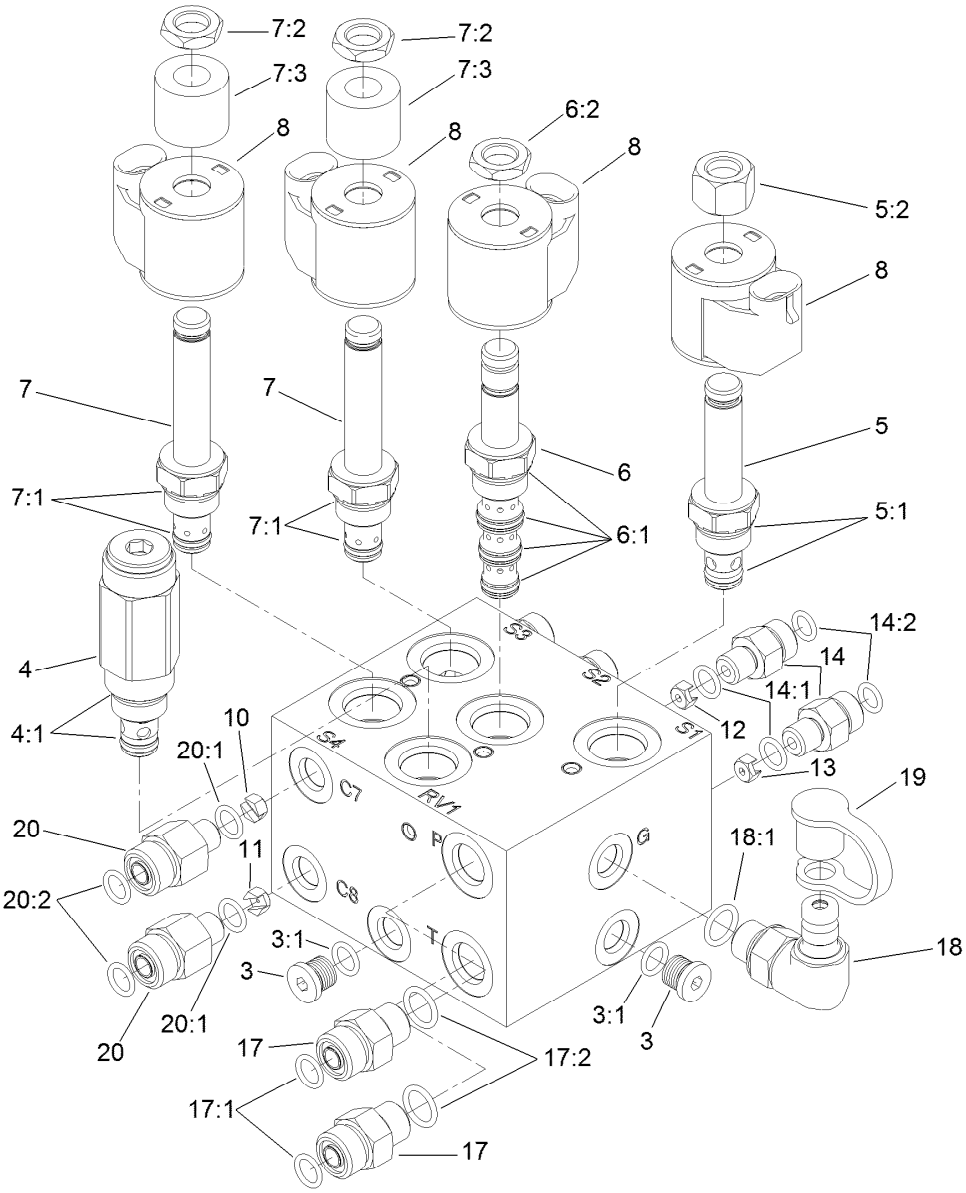

Lift Manifold Assembly No. 120-2057

Ref.	Part Number	Qty.	Description
3	353-990	2	Plug ASM
3:1	237-78	1	O-Ring
4	120-1663	1	Valve-Relief, 500 PSI
4:1	105-9156	1	Seal Kit
5	107-7517	1	Valve-Solenoid
5:1	105-9156	1	Seal Kit ●
5:2	107-7812	1	Nut-Solenoid
6	120-1665	1	Valve-Solenoid
6:1	112-6520	1	Seal Kit
6:2	110-2634	1	Nut-Coil
7	110-8898	2	Valve-Solenoid
7:1	107-7527	1	Seal Kit
7:2	110-2634	1	Nut-Coil
7:3	110-8909	1	Spacer-Coil
8	110-0497	4	Coil-Solenoid
10	120-2585	1	Orifice, .035

Ref.	Part Number	Qty.	Description
11	110-8903	1	Orifice-Control, Flow (0.055)
12	121-7879	3	Orifice-Control, Flow (0.040)
13	110-8902	3	Orifice-Control, Flow (0.046)
14	340-92	6	Fitting-Straight
14:1	237-78	1	O-Ring
14:2	237-21	1	O-Ring
17	340-2	2	Fitting-Straight
17:1	237-22	1	O-Ring
17:2	237-42	1	O-Ring
18	115-9148	1	Fitting-Elbow-90
18:1	237-42	1	O-Ring
19	354-79	1	Cap-Dust
20	340-88	2	Fitting-Straight
20:1	237-22	1	O-Ring
20:2	237-78	1	O-Ring

● Not illustrated

Front Mow Hydraulic Circuit Assembly

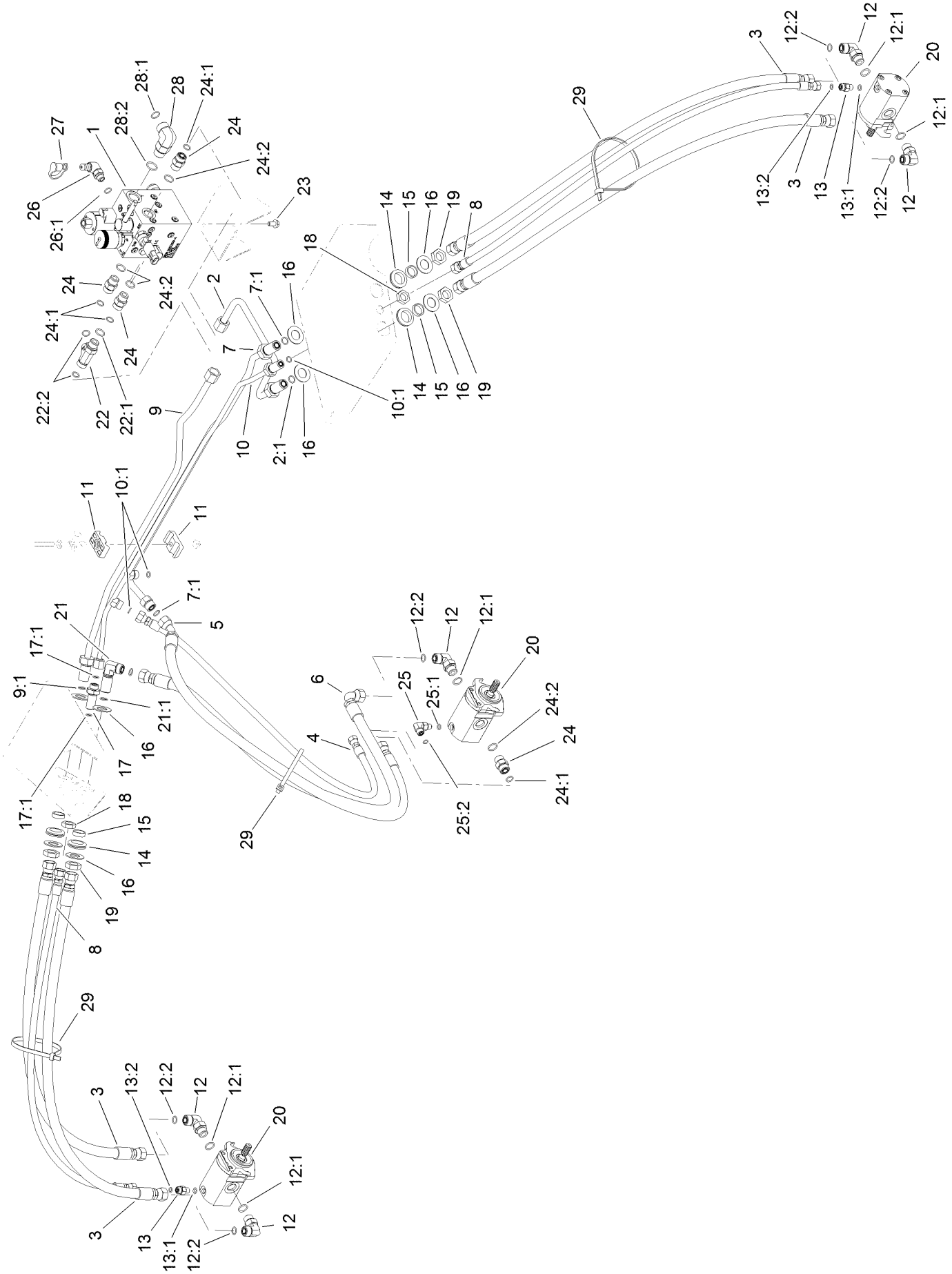

Front Mow Hydraulic Circuit Assembly (continued)

Ref.	Part Number	Qty.	Description
1	120-2058	1	HYD Mow Manifold ASM
2	120-2088	1	Tube-HYD
2:1	237-30	1	O-Ring
3	120-2097	4	Hose-HYD
4	121-7917	1	Hose-HYD
5	121-7861	1	Hose-HYD
6	121-7862	1	Hose-HYD
7	120-2089	1	Tube-HYD
7:1	237-30	2	O-Ring
8	120-2106	2	Hose-HYD
9	120-2091	1	Tube-HYD
9:1	237-30	1	O-Ring
10	120-2104	1	Tube-HYD
10:1	237-22	3	O-Ring
11	56-7976	2	Clamp-Tube
12	340-98	5	Fitting-Elbow, 90 DEG
12:1	237-79	1	O-Ring
12:2	237-30	1	O-Ring
13	340-92	2	Fitting-Straight
13:1	237-78	1	O-Ring
13:2	237-21	1	O-Ring
14	240-5	4	Grommet
15	69-8960	4	Spacer
16	69-8930	8	Washer
17	340-71	1	Fitting-Straight, Bulkhead
17:1	237-22	2	O-Ring
18	340-70	2	Nut-Lock
19	340-127	4	Nut-Bulkhead
20	120-2072	3	HYD Motor ASM
21	93-9151	1	Fitting-HYD
21:1	237-30	2	O-Ring
22	340-109	1	Fitting-Tee
22:1	237-79	1	O-Ring
22:2	237-30	2	O-Ring
23	3234-7	2	Screw-HHF
24	340-4	4	Fitting-Straight
24:1	237-30	1	O-Ring
24:2	237-79	1	O-Ring
25	340-132	1	Fitting-Elbow, 90 DEG
25:1	237-78	1	O-Ring
25:2	237-21	1	O-Ring
26	115-9148	1	Fitting-Elbow-90
26:1	237-42	1	O-Ring
27	354-79	1	Cap-Dust
28	340-17	1	Fitting-Elbow, 90 DEG
28:1	237-65	1	O-Ring
28:2	237-80	1	O-Ring
29	3334-945	3	Tie-Cable

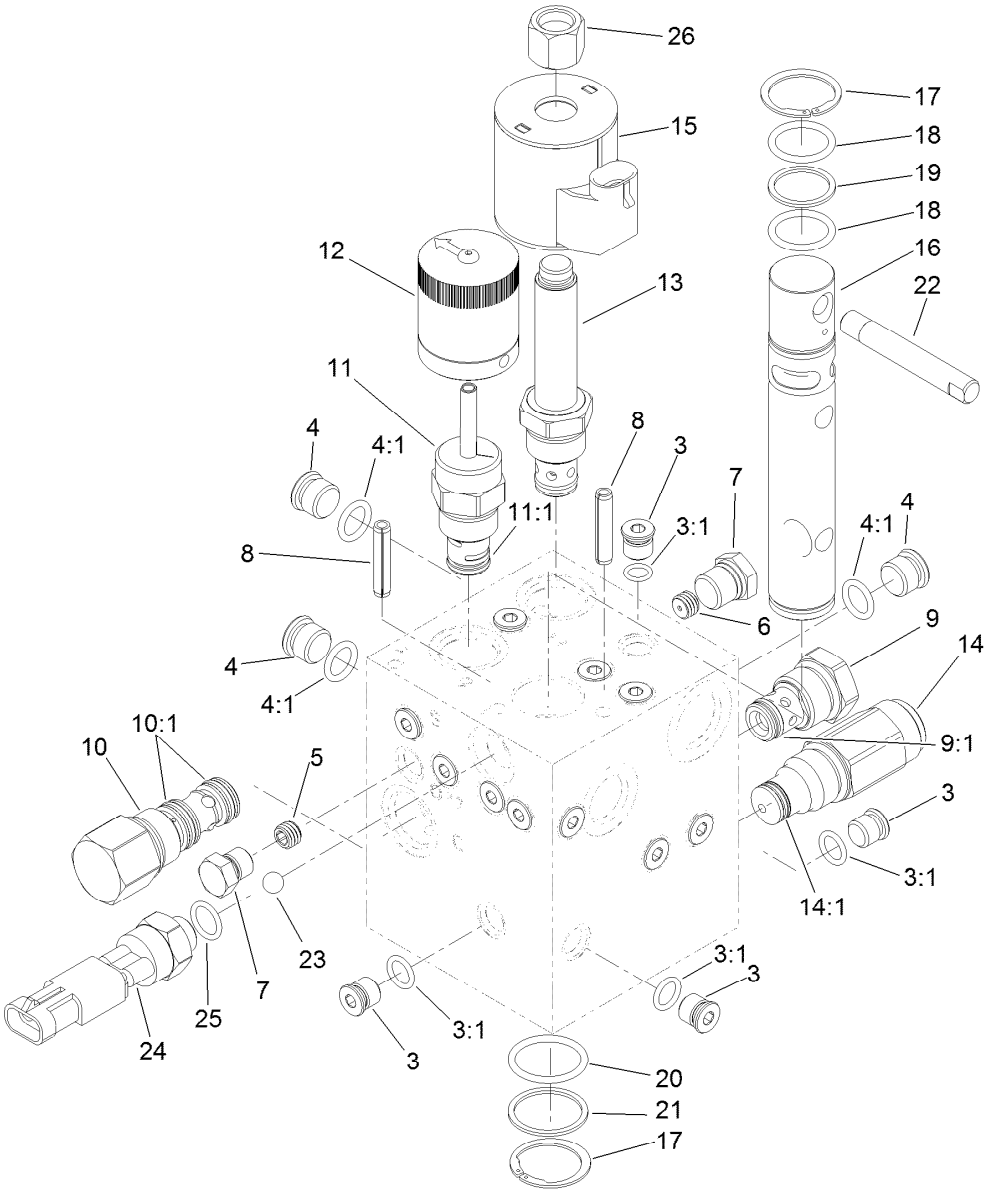

Mow Manifold Assembly No. 120-2058

Ref.	Part Number	Qty.	Description
3	353-990	17	Plug ASM
3:1	237-78	1	O-Ring
4	353-989	4	Plug-Hex, Hollow
4:1	237-42	1	O-Ring
5	110-8889	1	Plug-Orifice (0.020)
6	110-0495	1	Plug-Orifice (0.050 Inch)
7	117-0115	1	Plug
8	112-6531	2	Pin-Spring
9	110-8759	1	Valve-Check
9:1	110-8772	1	Seal Kit ●
10	121-7880	1	Spool-Logic
10:1	119-2159	1	Seal Kit ●
11	110-8769	1	Valve-Control, Manual Flow
11:1	110-2633	1	Seal Kit ●
12	110-8767	1	Rotary Handle ASM

Ref.	Part Number	Qty.	Description
13	110-8799	1	Valve-Relief, Proportional
14	121-7883	1	Valve-Relief, 2000 PSI
14:1	110-6316	1	Seal Kit ●
15	110-6344	1	Coil-12V, DC
16	120-1652	1	Spool-Backlap
17	120-1653	2	Ring-Retaining, External
18	120-1657	2	O-Ring
19	120-1656	1	Ring-Backup
20	120-1655	1	O-Ring
21	120-1654	1	Ring-Backup
22	120-1651	1	Handle-Spool
23	117-4605	1	Ball-SS
24	72-4320	1	Switch-Ball
25	110-8757	1	O-Ring
26	130-8180	1	Nut-Coil (9/16-24 Unef-2B)

● Not illustrated

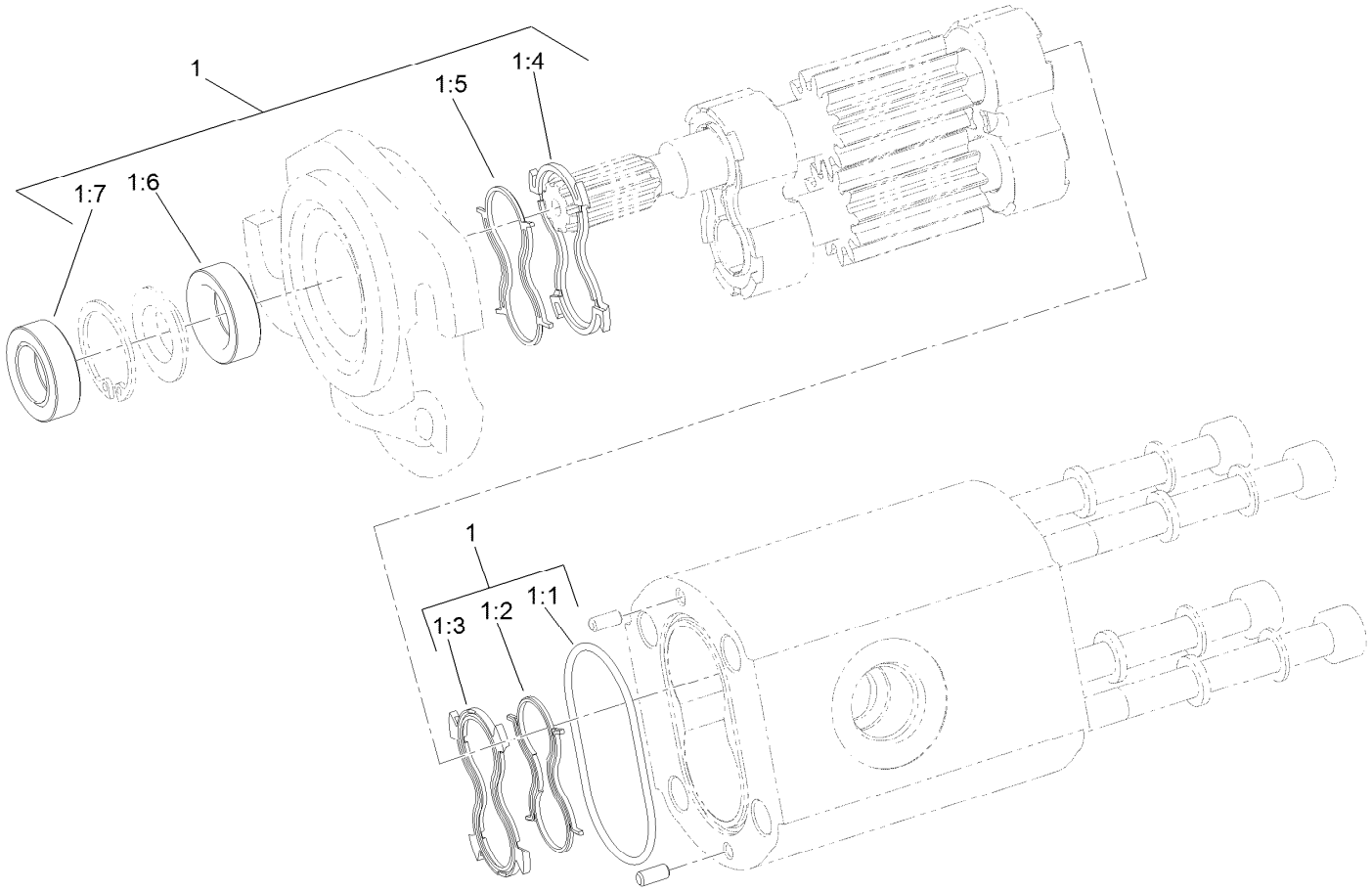

Hydraulic Reel Motor Assembly No. 120-2072

Ref.	*Part Number*	*Qty.*	*Description*
1	119-7113	1	Seal Kit
1:1		1	O-Ring Housing ●
1:2		1	Seal-Anti Extrusion ●
1:3		1	Seal-Plate, Balancing ●
1:4		1	Seal-Plate, Balancing ●
1:5		1	Seal-Anti Extrusion ●
1:6		1	Seal-Shaft (Inboard) ●
1:7		1	Seal-Shaft (Outboard) ●

● Not serviced separately

Rear Hydraulic Mow Ciruit Assembly

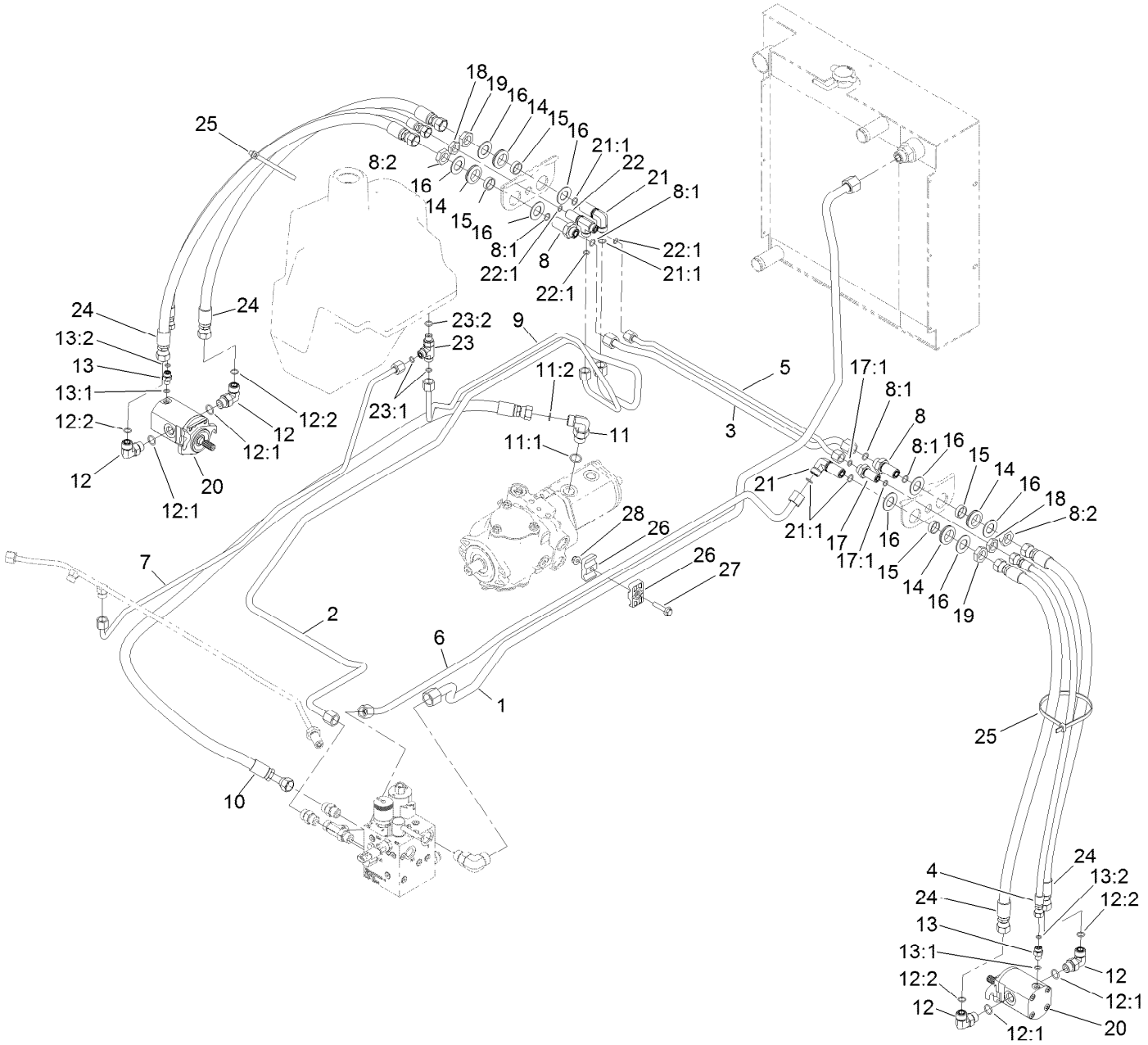

Rear Hydraulic Mow Ciruit Assembly (continued)

Ref.	Part Number	Qty.	Description
1	120-2095	1	Tube-HYD
2	120-2172	1	Tube-HYD
3	120-2173	1	Tube-HYD
4	121-7845	2	Hose-HYD
5	120-2174	1	Tube-HYD
6	120-2171	1	Tube-HYD
7	121-7843	1	Tube-HYD
8	340-161	2	Fitting-Bulkhead
8:1	237-30	2	O-Ring
8:2	340-127	1	Nut-Bulkhead
9	120-2180	1	Tube-HYD
10	121-7812	1	Hose-HYD
11	340-105	1	Fitting-Elbow, 90 DEG
11:1	237-80	1	O-Ring
11:2	237-30	1	O-Ring
12	340-98	4	Fitting-Elbow, 90 DEG
12:1	237-79	1	O-Ring
12:2	237-30	1	O-Ring
13	340-92	2	Fitting-Straight
13:1	237-78	1	O-Ring
13:2	237-21	1	O-Ring

Ref.	Part Number	Qty.	Description
14	240-5	4	Grommet
15	69-8960	4	Spacer
16	69-8930	8	Washer
17	340-71	1	Fitting-Straight, Bulkhead
17:1	237-22	2	O-Ring
18	340-70	2	Nut-Lock
19	340-127	2	Nut-Bulkhead
20	120-2072	2	HYD Motor ASM
21	93-9151	2	Fitting-HYD
21:1	237-30	2	O-Ring
22	340-68	1	Fitting-Tee, Bulkhead
22:1	237-22	3	O-Ring
23	340-86	1	Fitting-Tee
23:1	237-22	2	O-Ring
23:2	237-42	1	O-Ring
24	120-2101	4	Hose-HYD
25	3334-945	2	Tie-Cable
26	56-7977	2	Clamp-Tube
27	115-1794	1	Screw-HHF
28	104-8300	1	Nut-HF, NI

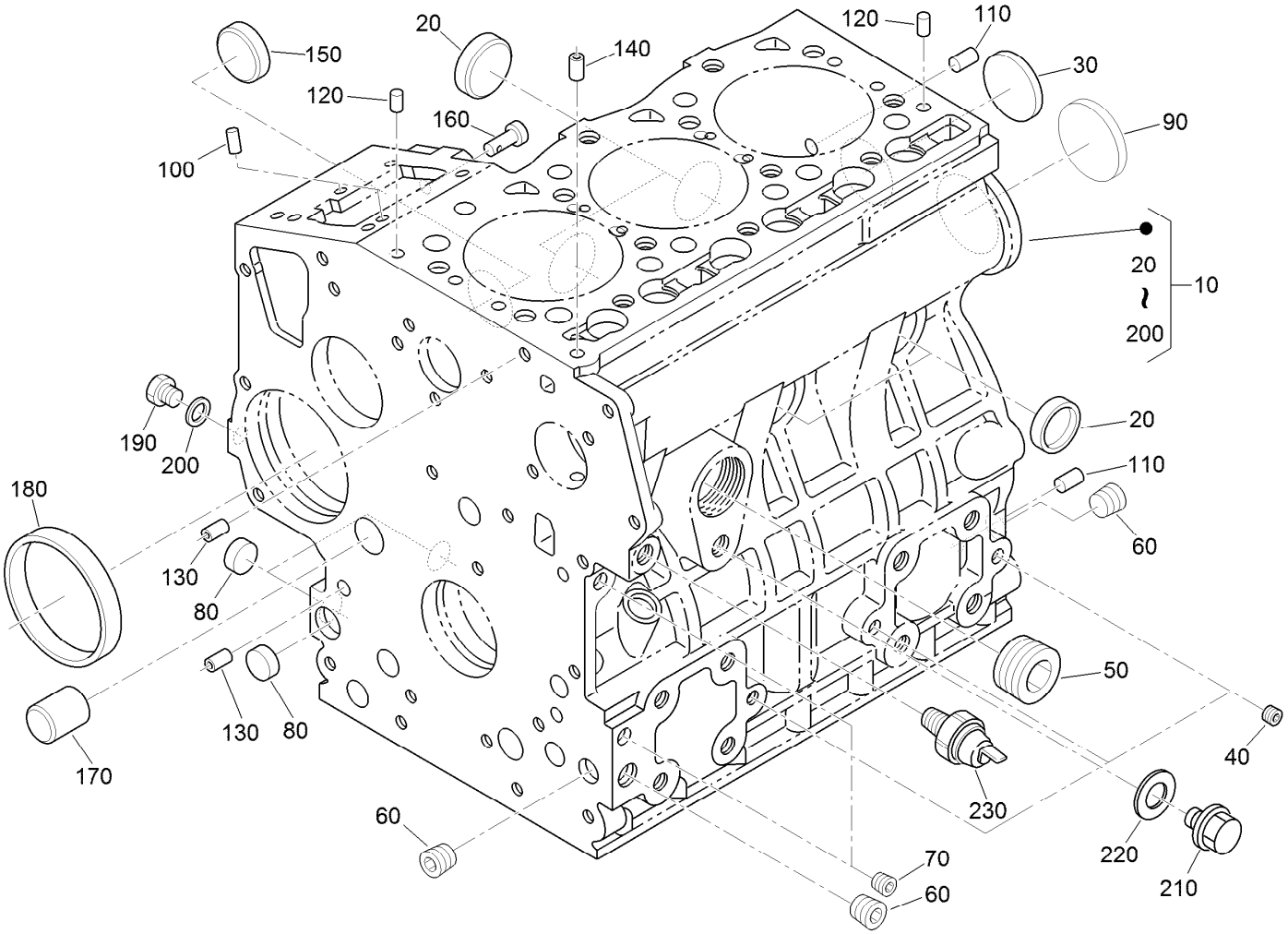

Crankcase Assembly

Ref.	Part Number	Qty.	Description
10	115-3443	1	Crankcase ASM
20	98-9398	4	Cap-Sealing
30	98-7539	1	Cap-Sealing
40	98-9687	3	Plug
50	105-3779	1	Plug
60	98-9597	3	Plug
70	98-7487	2	Plug
80	98-9379	3	Plug-Expansion
90	98-9668	1	Plug-Expansion
100	98-9375	2	Pin-Straight
110	98-9377	2	Pin-Straight
120	98-9376	2	Pin-Straight

Ref.	Part Number	Qty.	Description
130	98-9387	2	Pin-Pipe
140	98-9539	1	Pin-Pipe
150	98-9599	1	Plug
160	98-9630	1	Pin-Spring, Start
170	98-9675	1	Plug
180	98-9656	1	Bushing-Governor, Gear
190	120-2559	1	Plug
200	98-7428	1	Gasket
210	99-3447	1	Plug
220	106-7056	1	Gasket
230	98-9416	1	Switch-Oil

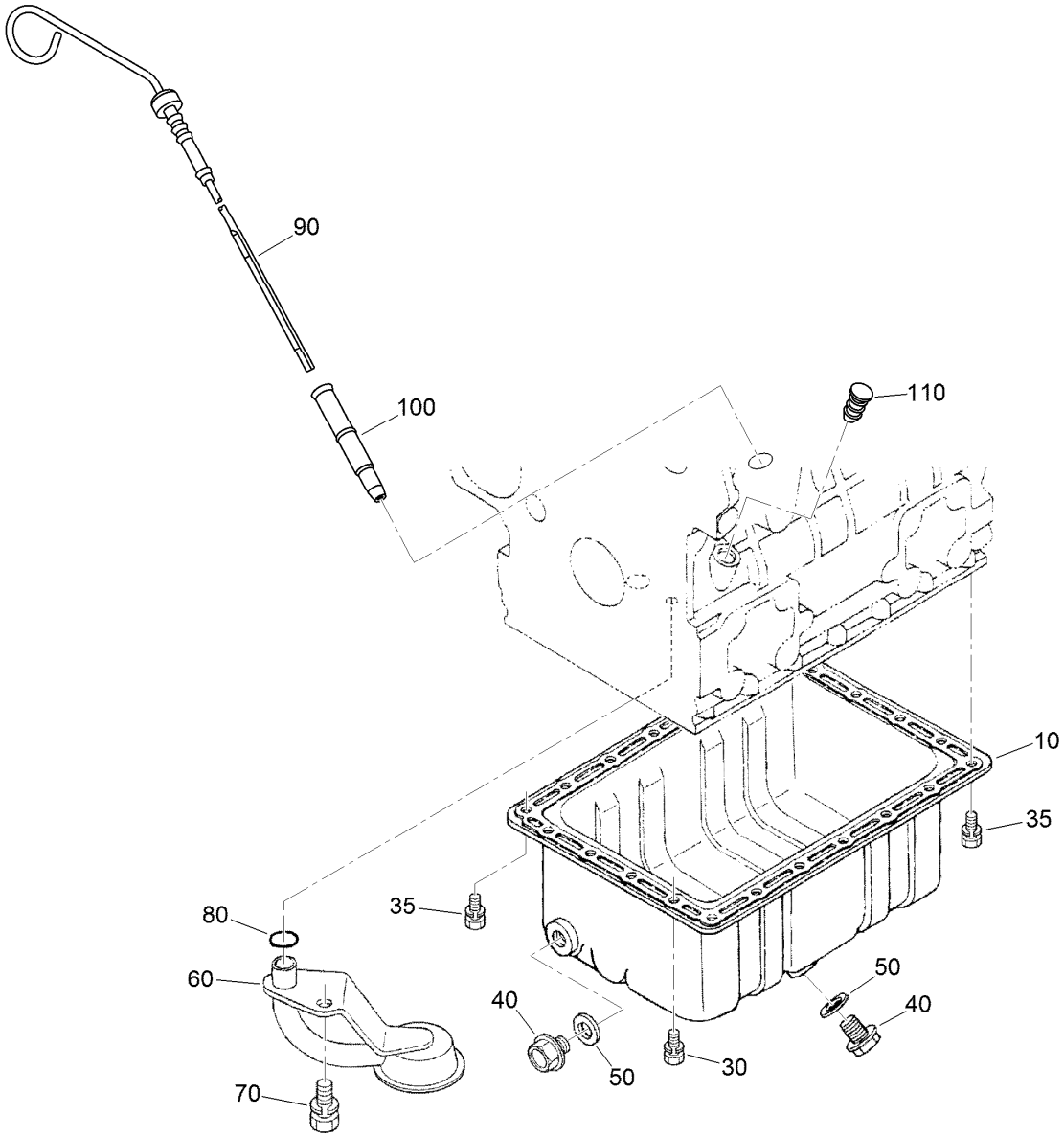

Oil Pan and Dipstick Assembly

Ref.	*Part Number*	*Qty.*	*Description*
10	98-9685	1	Pan-Oil
30	98-9351	20	Bolt
35	98-9351	2	Bolt
40	114-8151	2	Plug-Drain
50	98-7524	2	Gasket
60	108-1401	1	Base-Filter
70	98-7526	1	Bolt
80	105-3776	1	O-Ring
90	104-9348	1	Gauge-Oil
100	105-4580	1	Guide-Gauge, Oil
110	110-3720	1	Plug-Gauge, Oil

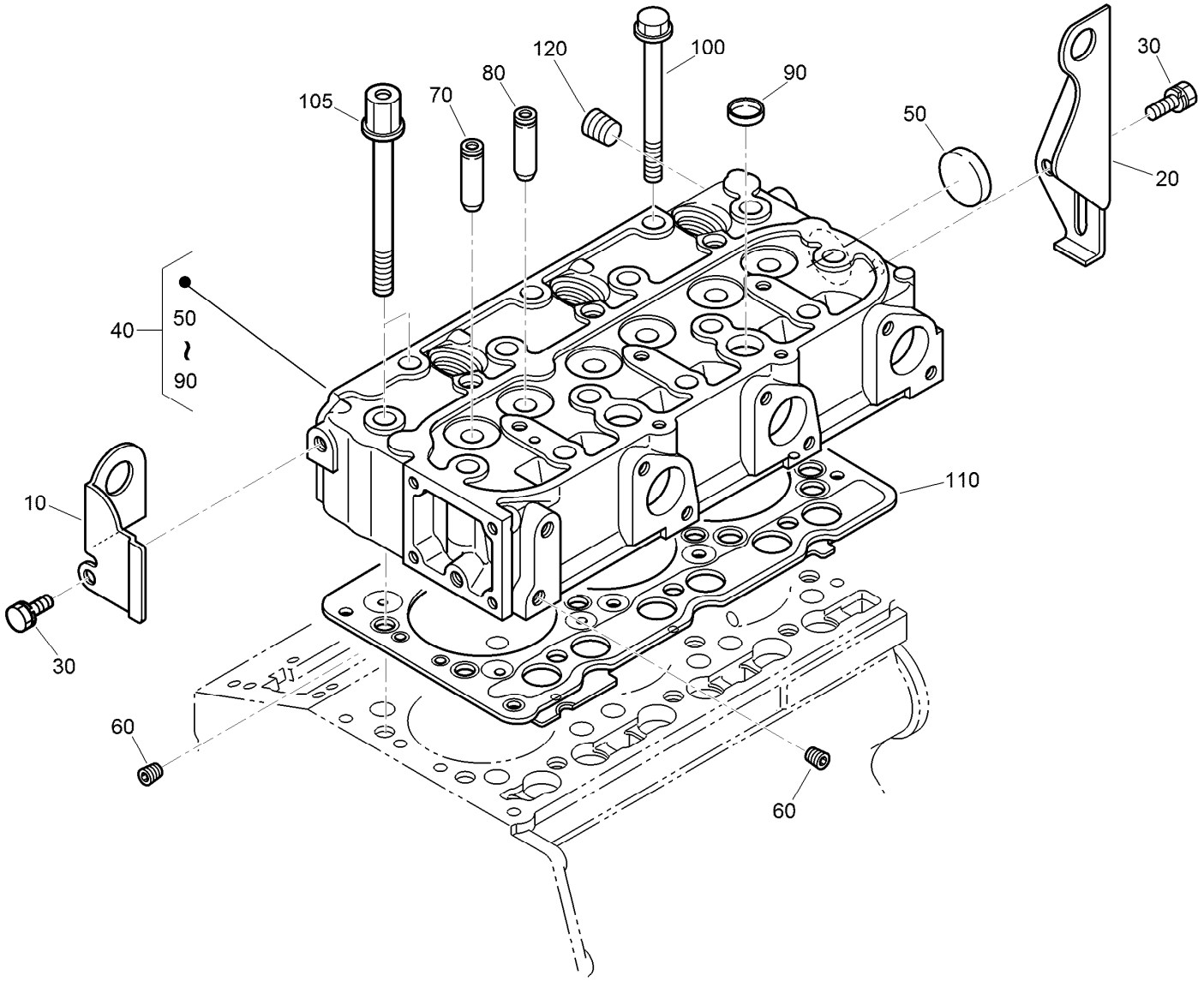

Cylinder Head Assembly

Ref.	Part Number	Qty.	Description
10	130-1231	1	Hook-Engine
20	98-9478	1	Hook-Engine
30	100-9195	2	Bolt
40	130-1544	1	Cylinder Head ASM
50	105-3705	1	Cap-Sealing
60	98-9687	2	Plug
70	107-9066	3	Guide-Valve, Inlet
80	107-9067	3	Guide-Valve, Exhaust
90	98-9389	2	Cap-Sealing
100	98-9479	12	Bolt-Head, Cylinder
105	98-9647	2	Bolt-Head, Cylinder
110	108-6573	1	Gasket-Head, Cylinder
120	98-9444	1	Plug

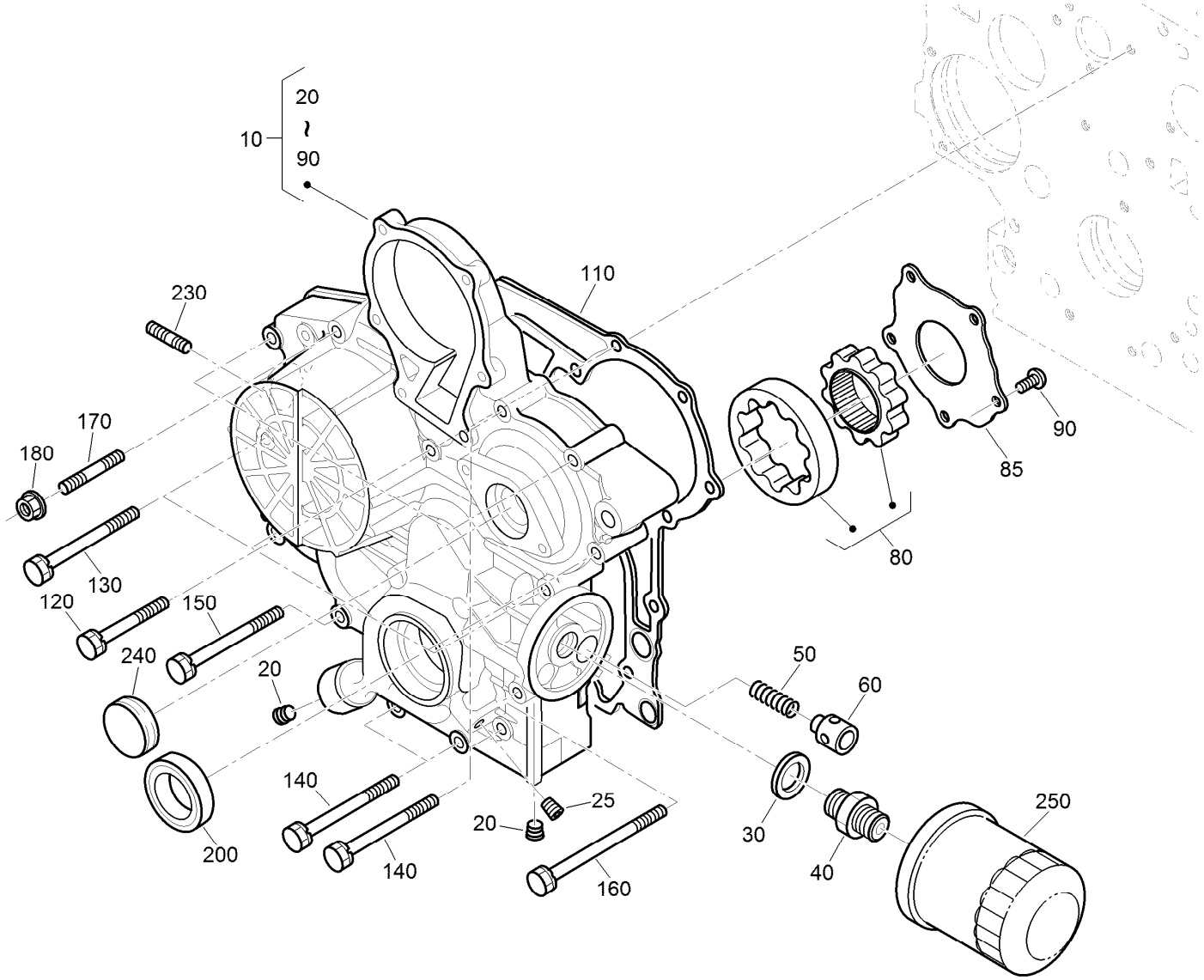

Gear Case and Oil Filter Cartridge Assembly

Ref.	Part Number	Qty.	Description
10	130-1243	1	*obs* Gear Case ASM
20	98-9598	2	Plug
25	98-7487	1	Plug
30	98-7562	1	Washer-Plain
40	98-9388	1	Joint-Pipe
50	130-1511	1	Spring
60	130-1510	1	Valve-Relief
80	130-1508	1	Rotor ASM
85	130-1509	1	Cover-Pump, Oil
90	130-1164	5	Screw-Binding
110	98-9633	1	Gasket-Case, Gear

Ref.	Part Number	Qty.	Description
120	100-1765	3	Bolt
130	125-9063	4	Bolt-Sems
140	98-9356	4	Bolt
150	107-9074	1	Bolt
160	98-9586	1	Bolt
170	105-3709	1	Stud
180	100-2203	1	Nut-Flange
200	119-8038	1	Seal-Oil
230	105-3710	2	Stud
240	98-9641	1	Cover-Case, Gear
250	130-1569	1	Cartridge-Filter, Oil

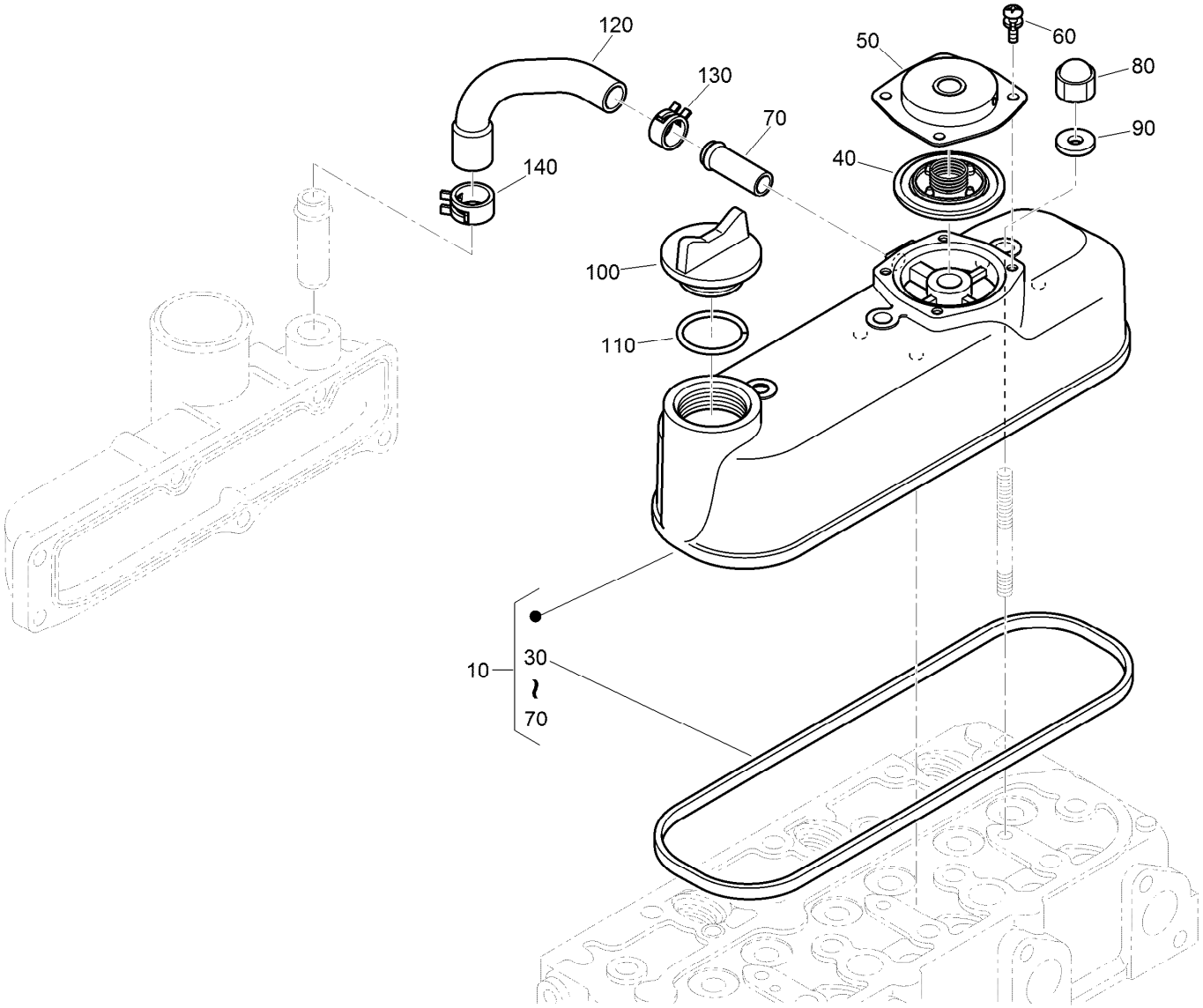

Cylinder Head Cover Assembly

Ref.	*Part Number*	*Qty.*	*Description*
10	130-1372	1	Cylinder Head Cover ASM
30	130-1249	1	Gasket-Head Cover
40	110-3715	1	Valve-Breather
50	110-3714	1	Cover-Breather
60	98-9364	4	Screw (With Washer)
70	98-7766	1	Pipe-Return, Water
80	98-9455	3	Nut-Cap
90	98-9454	3	Gasket
100	107-9075	1	Plug-Filler, Oil
110	99-3446	1	O-Ring
120	107-7836	1	Tube-Breather
130	108-2859	1	Clamp-Hose
140	108-2860	1	Clamp-Hose

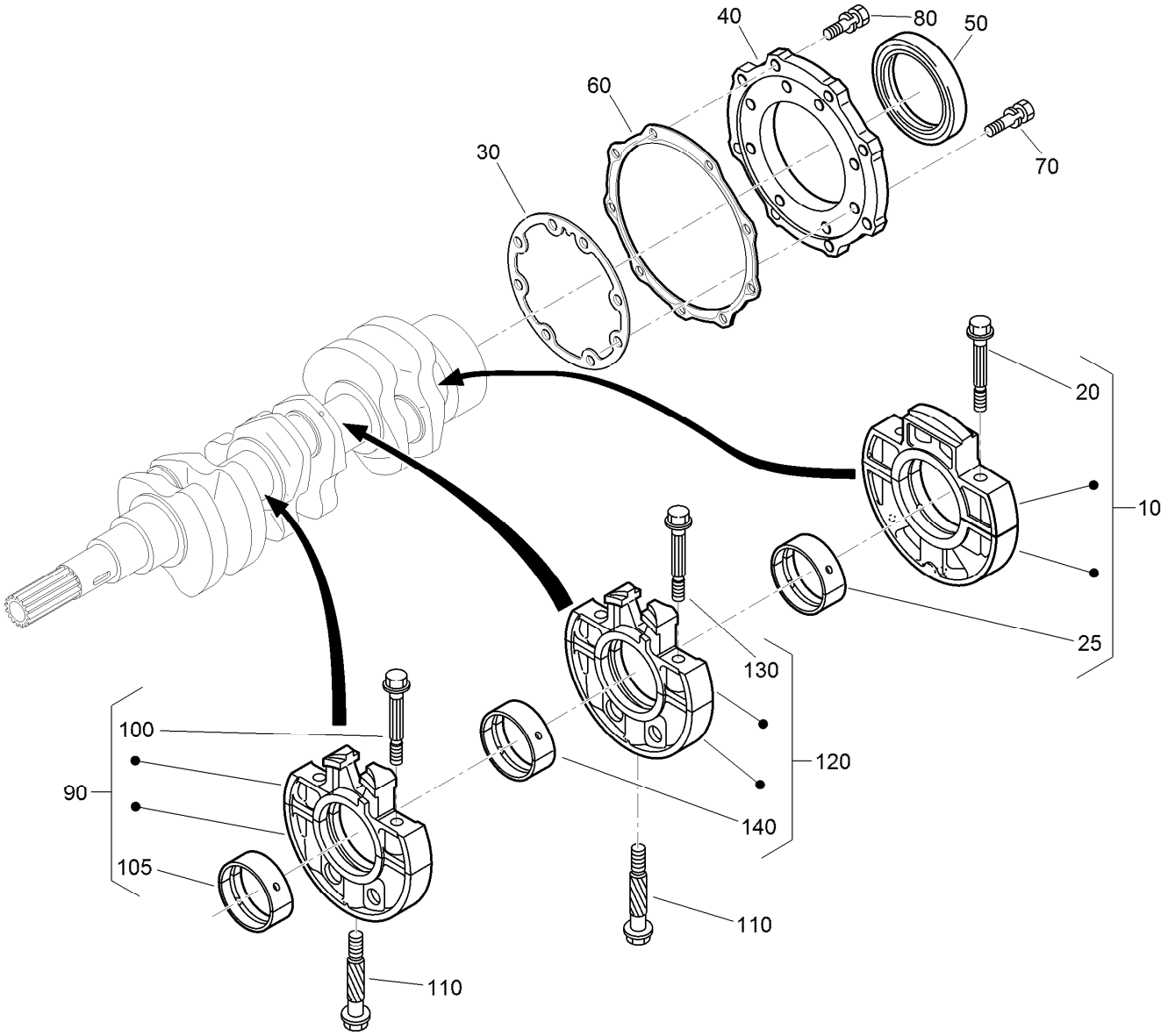

Main Bearing Case Assembly

Ref.	Part Number	Qty.	Description
10	112-7026	1	Wheel Bearing Case ASM
20	98-9484	2	Bolt-Case, Bearing
25	115-4121	1	Metal-Crankshaft (STD)
25	112-7039	1	Metal-Crankshaft (0.2Mm)
25	112-7040	1	Metal-Crankshaft (-0.4Mm)
30	127-0440	1	Gasket-Case, Bearing
40	112-7046	1	Cover-Case, Bearing
50	112-0180	1	Seal-Oil
60	112-7037	1	Gasket-Cover, Case
70	127-0441	8	Bolt
80	127-0442	9	Bolt

Ref.	Part Number	Qty.	Description
90	115-4106	1	Main Bearing Case ASM
100	98-9484	2	Bolt-Case, Bearing
105	98-9524	1	Metal-Crankshaft (STD Set)
105	127-0433	1	Metal-Crankshaft (-0.2MM)
105	98-9531	1	Bearing-Main (0.4MM)
110	98-9485	2	Bolt-Case, Bearing
120	115-4107	1	Main Bearing Case ASM
130	98-9484	2	Bolt-Case, Bearing
140	98-9524	1	Metal-Crankshaft (STD Set)
140	127-0433	1	Metal-Crankshaft (-0.2MM)
140	98-9531	1	Bearing-Main (0.4MM)

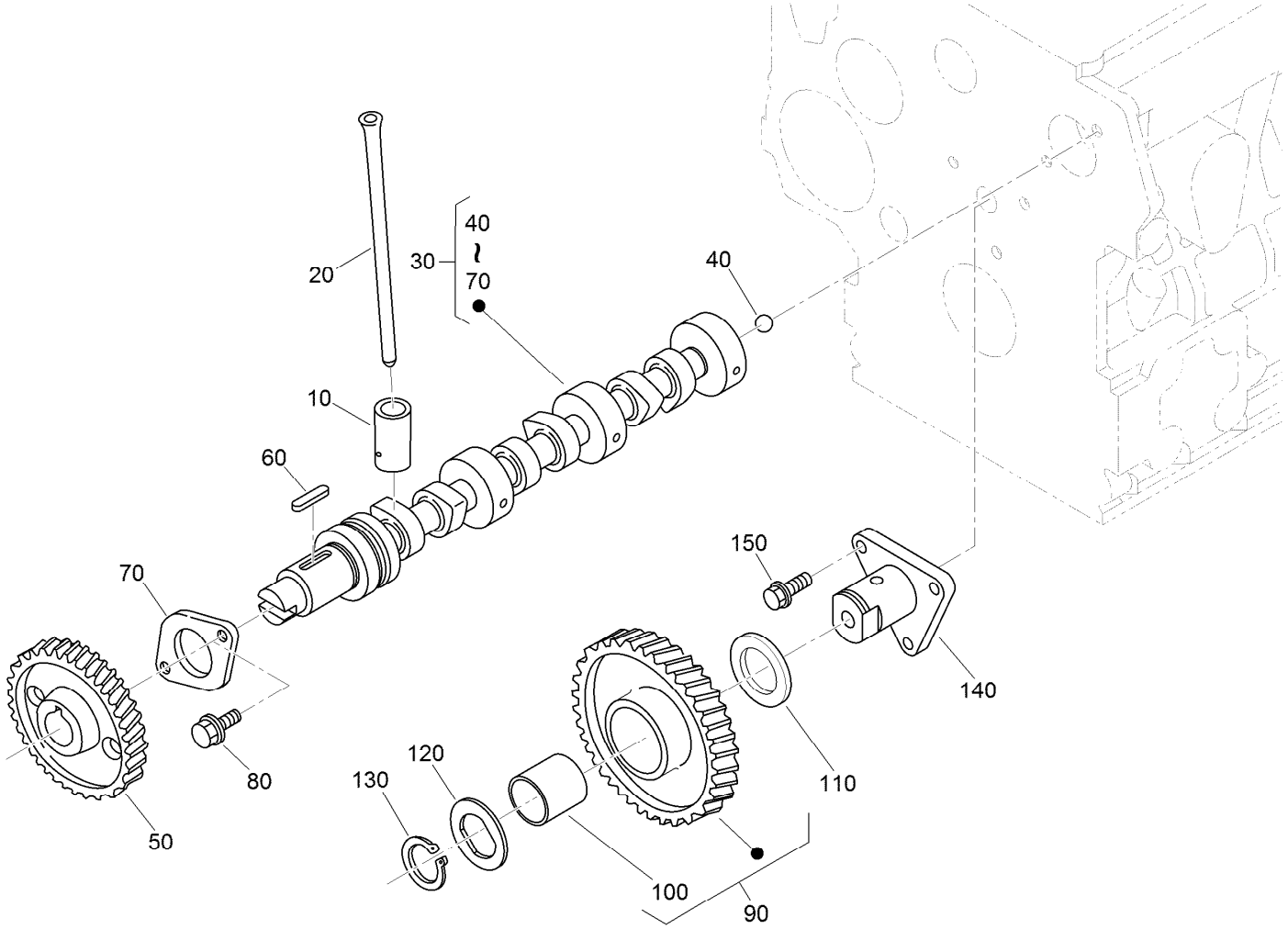

Camshaft and Idle Gear Shaft Assembly

Ref.	*Part Number*	*Qty.*	*Description*
10	112-0185	6	Tappet
20	127-0421	6	Rod-Push
30	130-1545	1	Camshaft ASM
40	110-3729	1	Ball
50	98-9512	1	Gear-Cam
60	98-9378	1	Key-Feather
70	98-9510	1	Stopper-Camshaft
80	98-7692	2	Bolt
90	117-7584	1	Idler Gear ASM
100	117-7585	1	Bushing-Gear, Idle
110	98-9535	1	Collar-Gear, Idle
120	98-9536	1	Collar-Gear, Idle
130	98-9534	1	Circlip-Gear, Idle
140	98-9533	1	Shaft-Gear, Idle
150	98-7692	3	Bolt

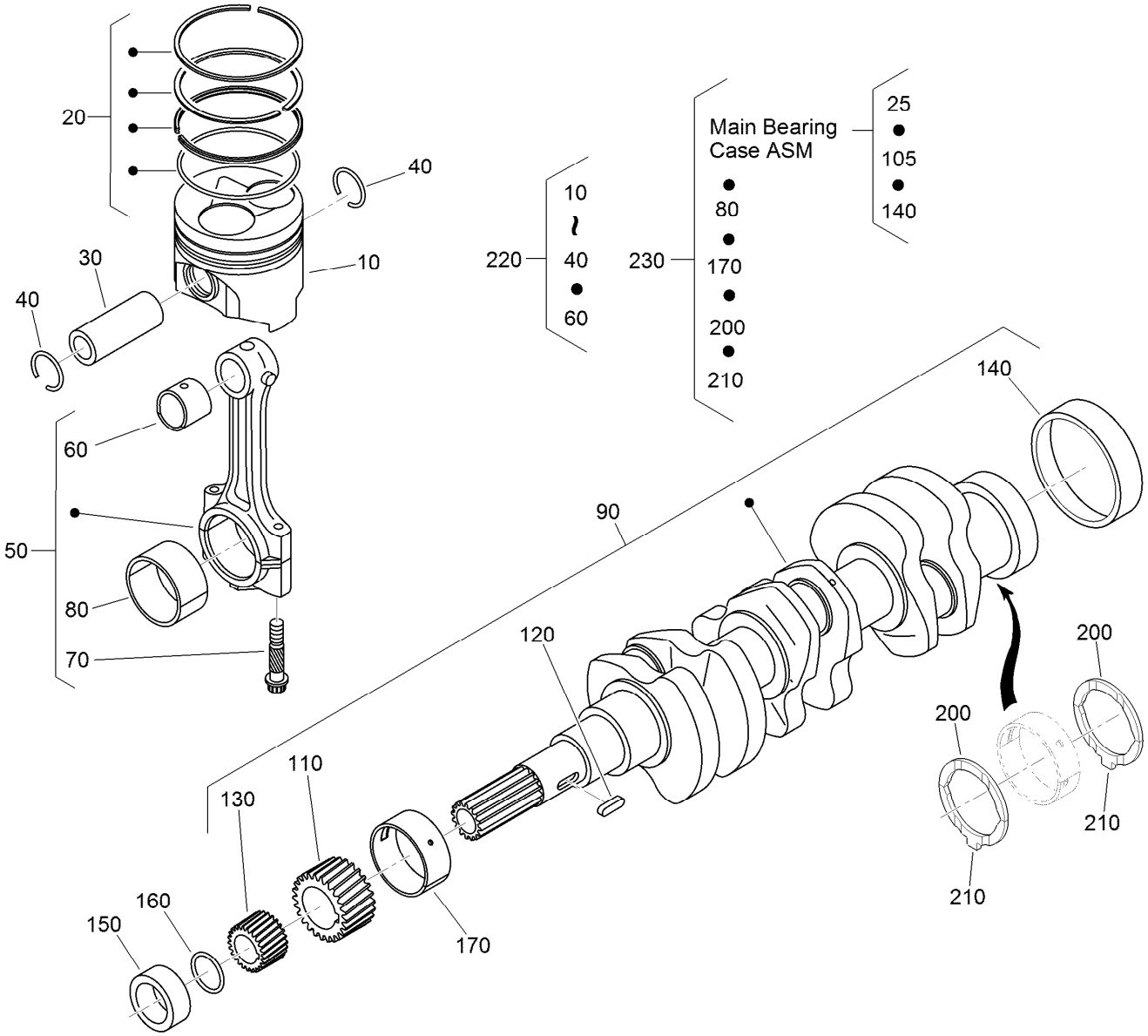

Piston and Crankshaft Assembly

Ref.	Part Number	Qty.	Description
10	130-1546	3	Piston (STD)
10	130-1549	3	Piston (+0.50MM)
20	130-1506	3	Piston Ring ASM (STD)
20	130-1507	3	Piston Ring ASM (+0.50MM)
30	98-9513	3	Pin-Piston
40	98-9514	6	Circlip-Pin, Piston
50	117-7586	3	Connecting Rod ASM
60	115-3014	3	Bushing-Pin, Piston
70	98-9517	6	Bolt-Rod, Connecting
80	98-9553	3	Bearing-Rod (STD)
80	117-7587	3	Metal-Crankpin (-0.2MM)
80	117-7588	3	Metal-Crankpin (-0.4MM)
90	130-1375	1	Crankshaft ASM
110	117-7561	1	Gear-Crankshaft
120	98-9666	1	Key
130	127-0445	1	Gear-Drive, Oil Pump
140	98-9522	1	Sleeve-Crankshaft
150	127-0444	1	Collar-Crankshaft

Ref.	Part Number	Qty.	Description
160	105-3783	1	O-Ring
170	112-7005	1	Bearing-Main (STD)
170	98-9528	1	Bearing-Main (-0.2MM)
170	130-1274	1	Metal-Crankshaft (-0.40Mm)
200	98-9413	2	Bearing-Thrust (STD)
200	127-0416	2	Metal-Side (+0.2Mm)
200	127-0417	2	Metal-Side (+0.40Mm)
210	98-9688	2	Bearing-Thrust (STD)
210	127-0437	2	Metal-Side (+0.2MM)
210	127-0438	2	Metal-Side (+0.40MM)
220	130-1547	3	Piston Kit
220	130-1548	3	Piston Kit
230	130-1501	1	Engine Metal Kit (STD)
230	130-1498	1	Engine Metal Kit (-0.20Mm/+0.20Mm)
230	130-1499	1	Engine Metal Kit (-0.40Mm/+0.40Mm)

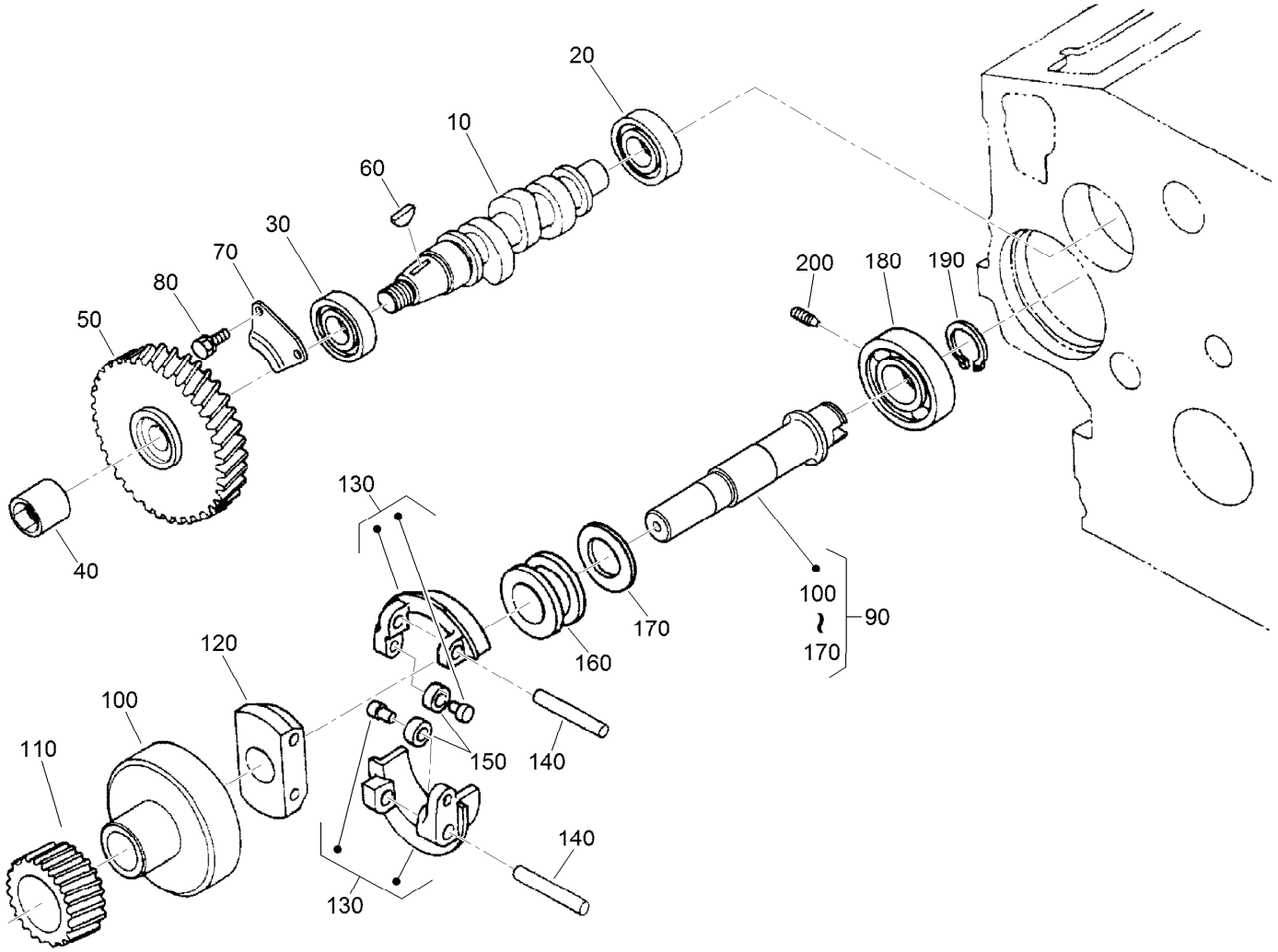

Fuel Camshaft and Governor Shaft Assembly

Ref.	Part Number	Qty.	Description
10	98-9459	1	Camshaft-Fuel
20	107-9077	1	Bearing-Ball
30	107-9078	1	Bearing-Ball
40	130-1512	1	Nut
50	120-2562	1	Gear-Pump, Injection
60	98-9595	1	Key-Woodruff
70	98-9511	1	Stopper-Fuel, Camshaft
80	98-7692	2	Bolt
90	130-1255	1	Governor Shaft ASM
100	98-9562	1	Holder-Gear, Governor

Ref.	Part Number	Qty.	Description
110	98-9673	1	Gear-Governor
120	98-9561	1	Holder-Weight, Governor
130	130-1240	2	Governor Weight ASM
140	98-9560	2	Shaft-Weight, Governor
150	98-9692	2	Roller
160	98-9563	1	Sleeve-Governor
170	98-9564	1	Washer-Thrust
180	107-9079	1	Bearing-Ball
190	98-9657	1	Circlip-Shaft, Governor
200	98-9565	1	Screw-Set

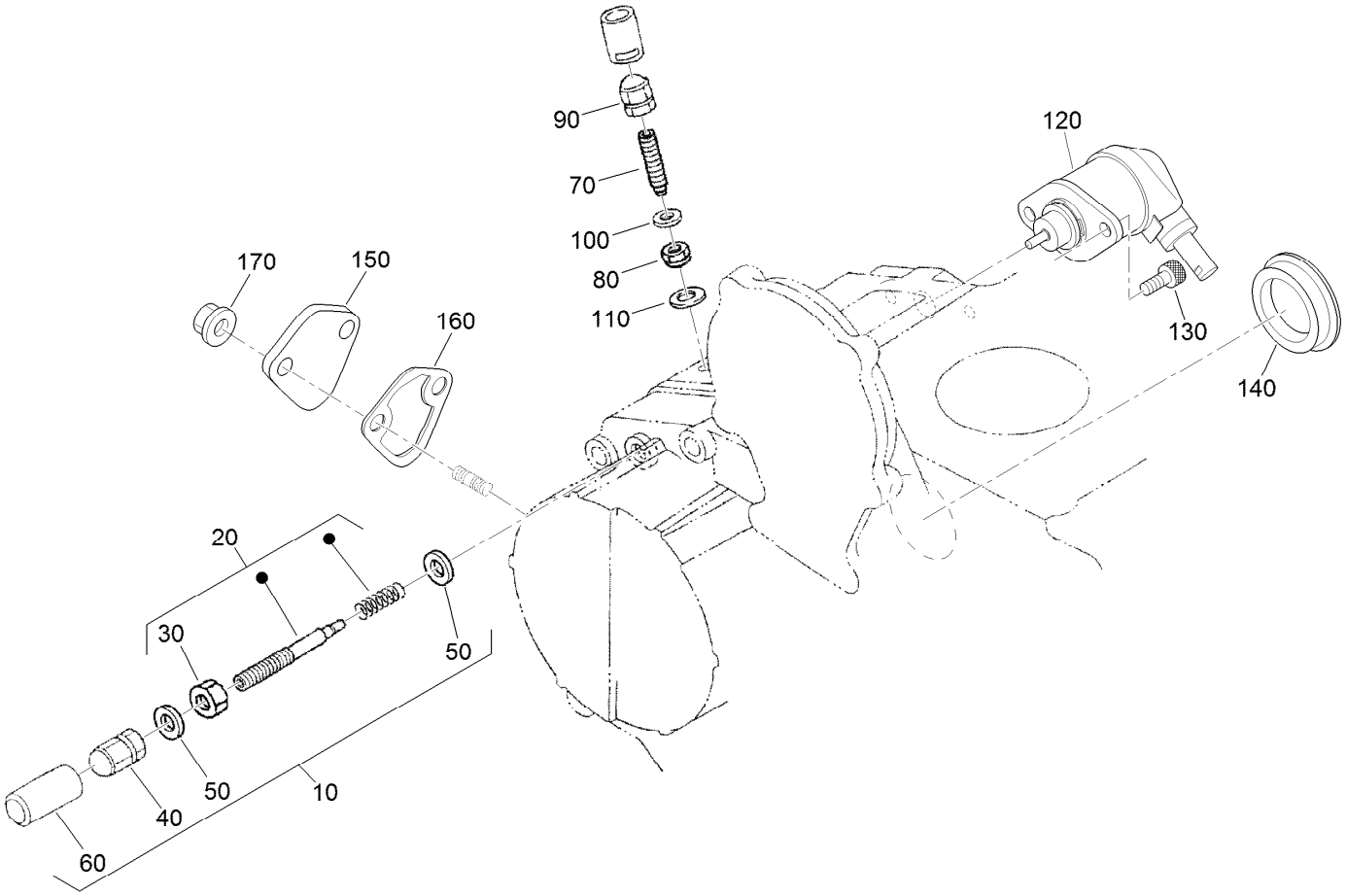

Idle Apparatus and Stop Solenoid Assembly

Ref.	Part Number	Qty.	Description
10	98-9678	1	Idle Apparatus ASM
20	112-7014	1	Adjusting Bolt ASM
30	98-9439	1	Nut
40	112-0181	1	Nut
50	98-7654	2	Gasket
60	98-7656	1	Cap
70	112-7015	1	Bolt-Adjusting
80	100-2175	1	Nut-Lock
90	112-0181	1	Nut

Ref.	Part Number	Qty.	Description
100	98-7654	1	Gasket
110	107-9081	1	Gasket
120	104-5155	1	Solenoid-Stop
130	130-1155	2	Screw-HSH
140	112-7016	1	Cover-Pump
150	99-3514	1	Cover
160	117-7562	1	Gasket-Pump, Fuel
170	100-2203	2	Nut-Flange

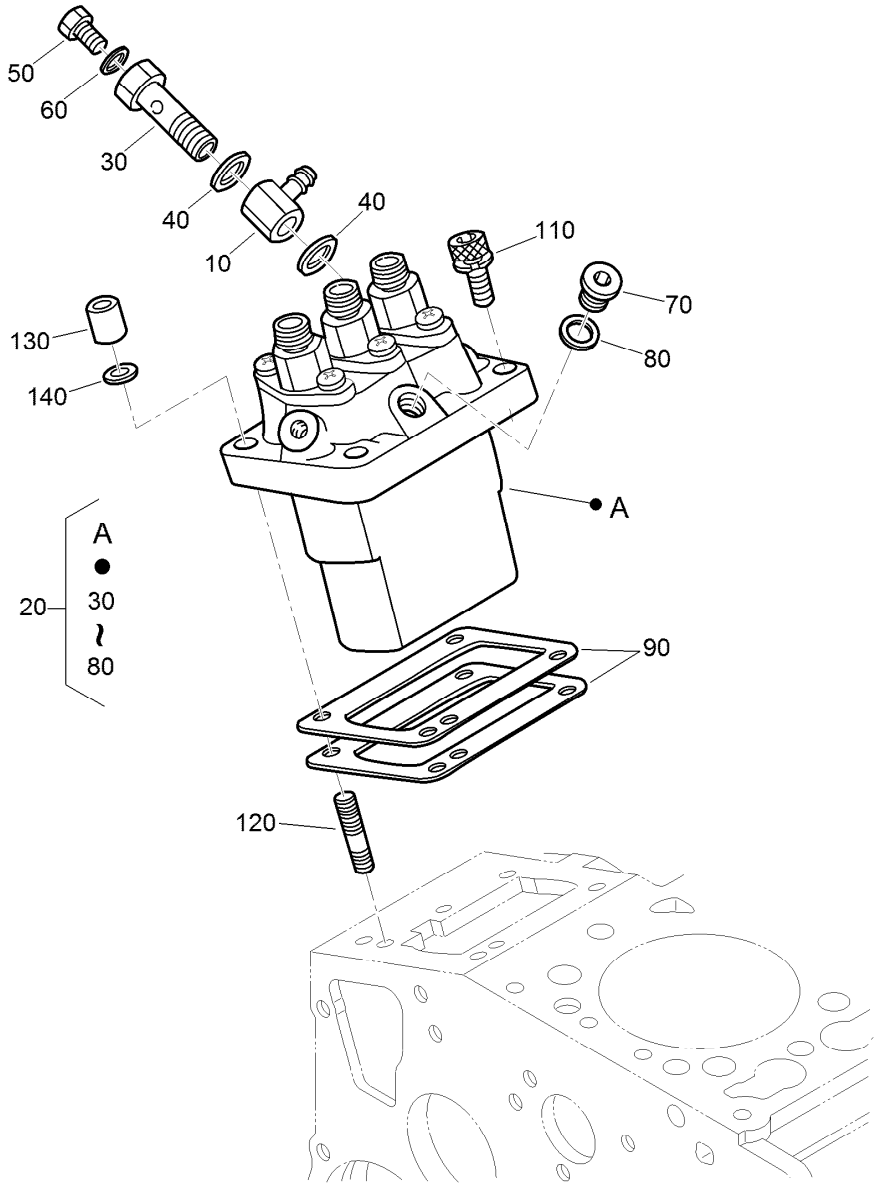

Injection Pump Assembly

Ref.	Part Number	Qty.	Description
10	98-9596	1	Joint-Eye
20	98-9643	1	Injection Pump ASM
30	98-9464	1	Bolt-Joint
40	98-9445	2	Gasket
50	98-9430	1	Screw
60	98-9446	1	Gasket
70	98-9466	1	Plug
80	98-9451	1	Gasket
90	98-9456	1	Shim-Injection (0.20MM)

Ref.	Part Number	Qty.	Description
90	98-9457	1	Shim-Injection (0.25MM)
90	98-9458	1	Shim-Injection (0.30MM)
90	115-3046	1	Shim-Injection (0.35MM)
90	115-3045	1	Shim-Injection (0.175MM)
110	117-7564	2	Bolt-Hex Soc HD
120	98-9438	2	Stud
130	98-9440	2	Nut-Cap
140	98-7699	2	Washer-Spring

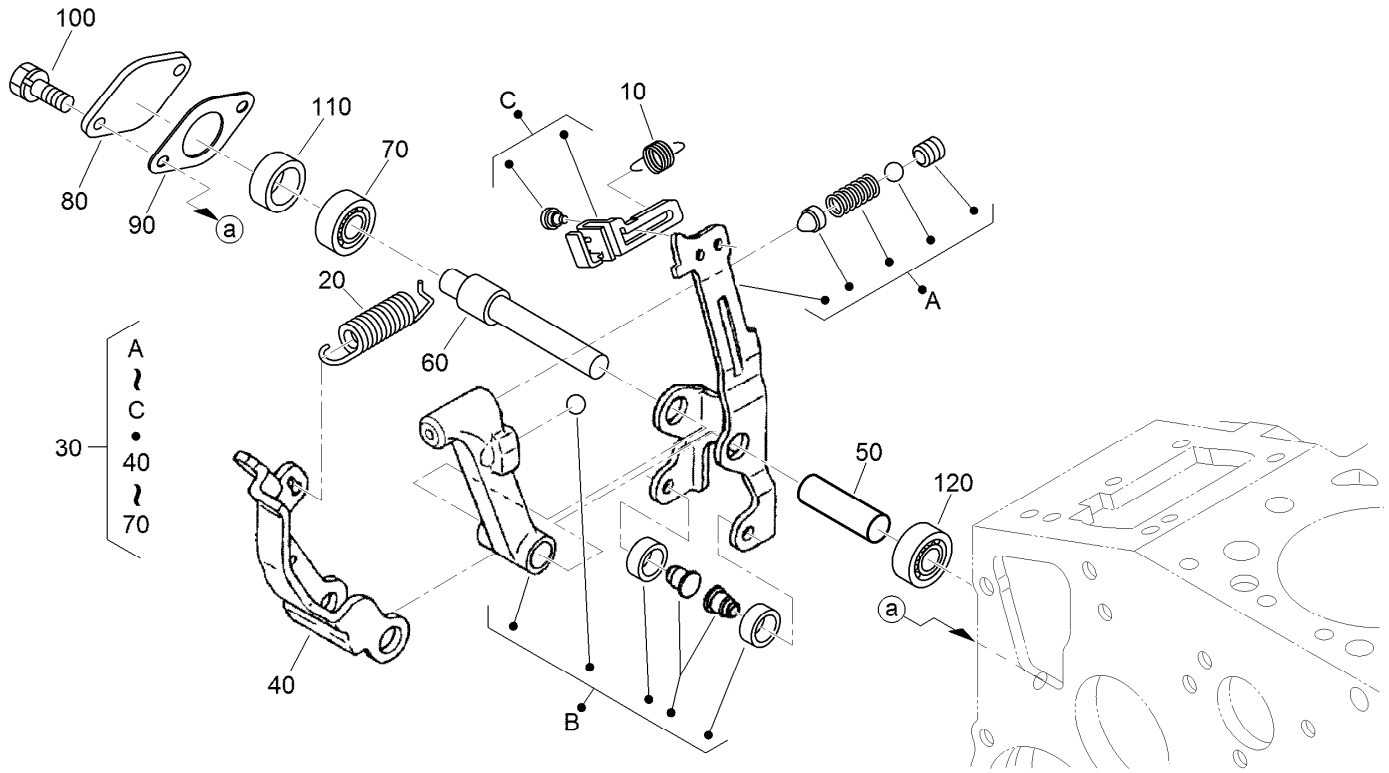

Governor Assembly

Ref.	Part Number	Qty.	Description
10	105-3786	1	Spring-Start
20	98-9681	1	Spring-Governor
30	115-4502	1	Fork Lever ASM
40	107-9084	1	Lever-Fork
50	107-9085	1	Shaft-Lever, Fork
60	107-9086	1	Shaft-Lever, Fork
70	98-9570	1	Bearing-Miniaturize
80	115-4122	1	Cover-Shaft, Fork Lever
90	98-9682	1	Gasket
100	98-9350	2	Bolt
110	98-9567	1	Collar
120	98-9571	1	Bearing-Miniaturize

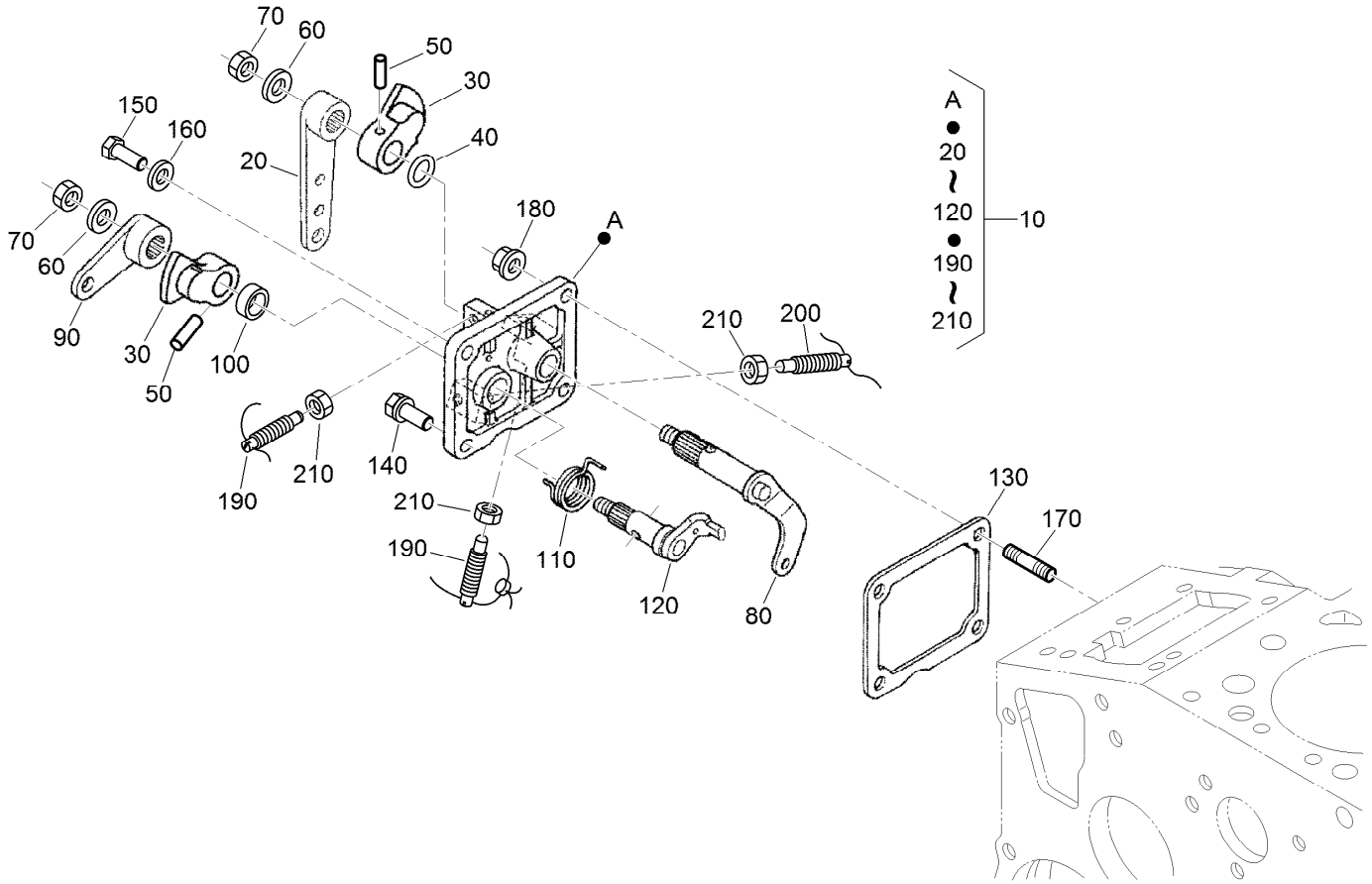

Speed Control Plate Assembly

Ref.	Part Number	Qty.	Description
10	105-3735	1	Control Plate ASM
20	98-9662	1	Lever-Control, Speed
30	98-9572	2	Lever-Control, Speed
40	105-3788	1	O-Ring
50	98-7602	2	Pin-Spring
60	98-9594	2	Washer-Plain
70	98-9589	2	Nut
80	98-9658	1	Governor Lever ASM
90	98-9663	1	Lever-Stop, Engine
100	98-7601	1	Seal-Oil
110	98-9472	1	Spring-Return

Ref.	Part Number	Qty.	Description
120	98-9664	1	Shaft-Lever, Stop
130	98-9637	1	Gasket
140	98-7692	1	Bolt
150	127-0401	1	Bolt-Hex
160	98-7654	1	Gasket
170	105-3710	2	Stud
180	100-2203	2	Nut-Flange
190	117-7565	2	Bolt-Adjusting
200	117-7566	1	Bolt-Adjusting
210	98-7572	3	Nut

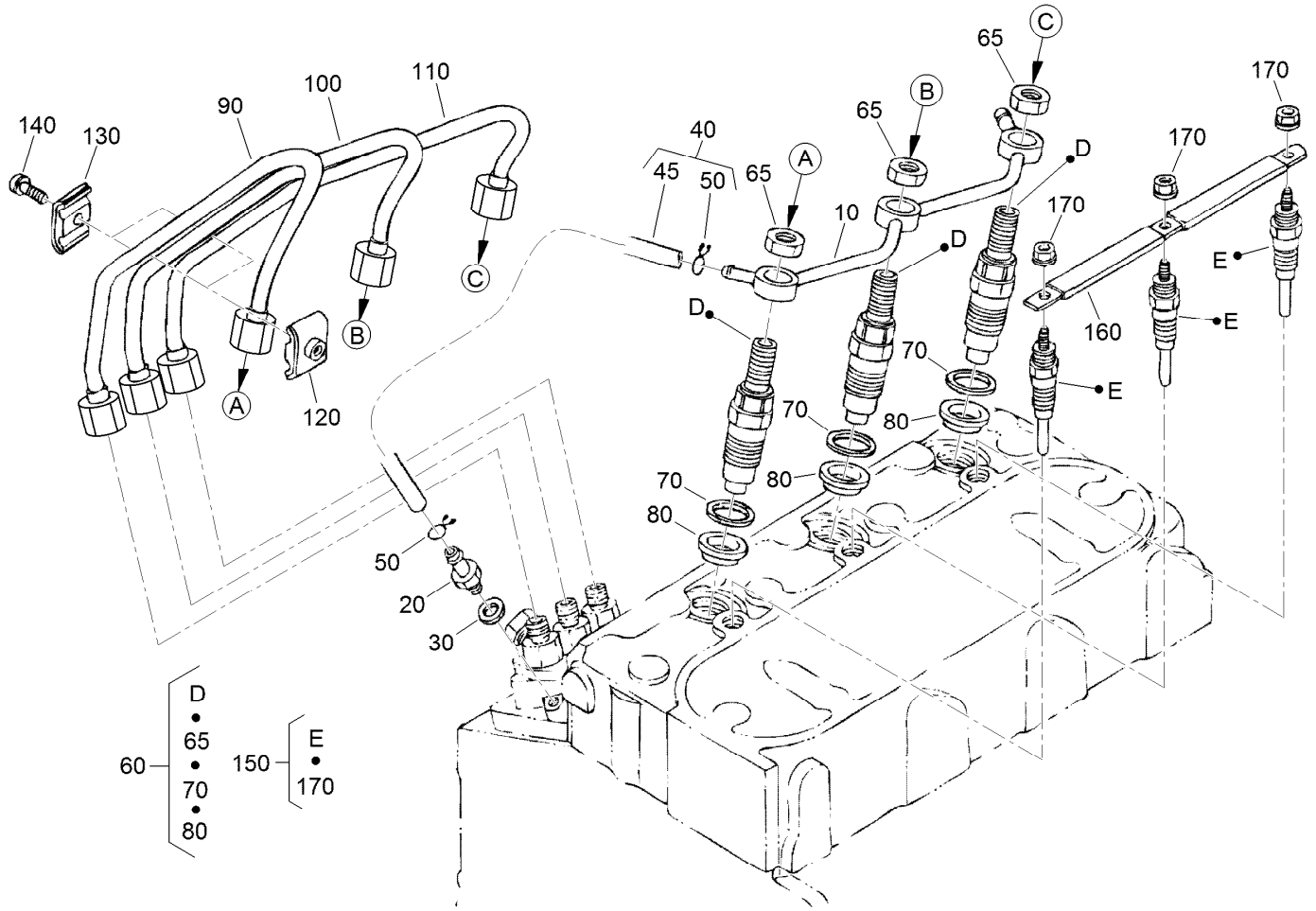

Nozzle Holder and Glow Plug Assembly

Ref.	Part Number	Qty.	Description
10	98-9620	1	Overflow Pipe ASM
20	98-9431	1	Screw-Bleeder, Air
30	98-7654	1	Gasket
40	98-9420	1	Overflow Pipe ASM
45	112-0182	1	Pipe-Overflow
50	98-7671	2	Clip-Pipe
60	130-1410	3	Nozzle Holder Kit
65	121-2411	3	Nut
70	98-7676	3	Gasket
80	98-7677	3	Seal-Heat

Ref.	Part Number	Qty.	Description
90	98-9622	1	Pipe-Injection
100	98-9654	1	Pipe-Injection
110	98-9655	1	Pipe-Injection
120	98-7682	2	Clamp-Pipe
130	98-7683	2	Clamp-Pipe
140	98-7684	2	Screw (W/Washer)
150	130-1411	3	Plug-Glow
160	98-9631	1	Cord-Plug, Glow
170	99-8377	3	Nut-Flange

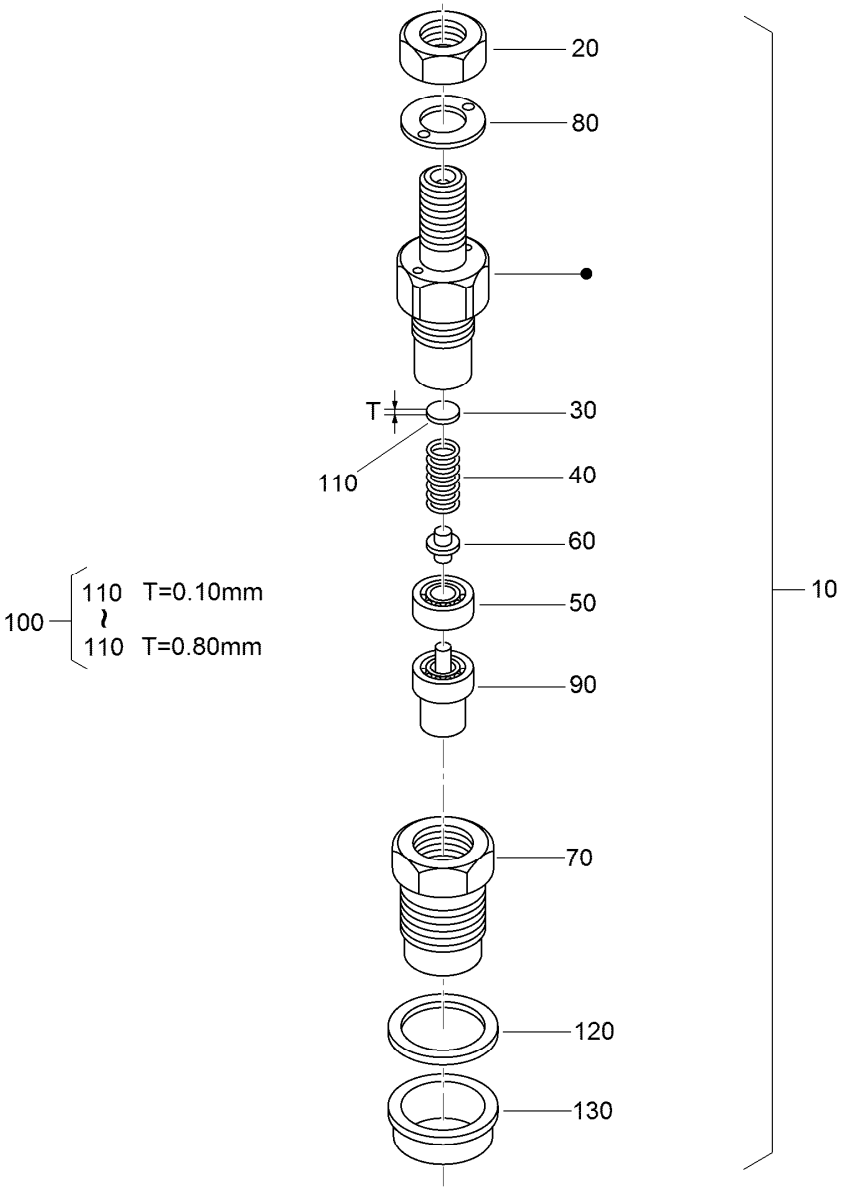

Nozzle Holder Assembly

Ref.	Part Number	Qty.	Description
10	130-1410	3	Nozzle Holder Kit
20	121-2411	3	Nut
30	99-8302	3	Washer-Adjusting
40	99-8303	3	Spring-Nozzle
50	99-8304	3	Spacer-Distance
60	99-8305	3	Rod-Push
70	99-8306	3	Nut-Nozzle
80	99-8307	3	Washer-Plain
90	115-3020	3	Piece-Nozzle
100	99-8309	3	Adjusting Washer ASM
110	99-8310	3	Washer-Adjust (0.10MM)

Ref.	Part Number	Qty.	Description
110	99-8311	3	Washer-Adjust (0.20MM)
110	99-8312	3	Washer-Adjust (0.30MM)
110	99-8313	3	Washer-Adjust (0.40MM)
110	99-8314	3	Washer-Adjust (0.50MM)
110	99-8315	3	Washer-Adjust (0.52MM)
110	99-8316	3	Washer-Adjust (0.54MM)
110	99-8317	3	Washer-Adjust (0.56MM)
110	99-8318	3	Washer-Adjust (0.58MM)
110	99-8319	3	Washer-Adjust (0.80MM)
120	98-7676	3	Gasket
130	98-7677	3	Seal-Heat

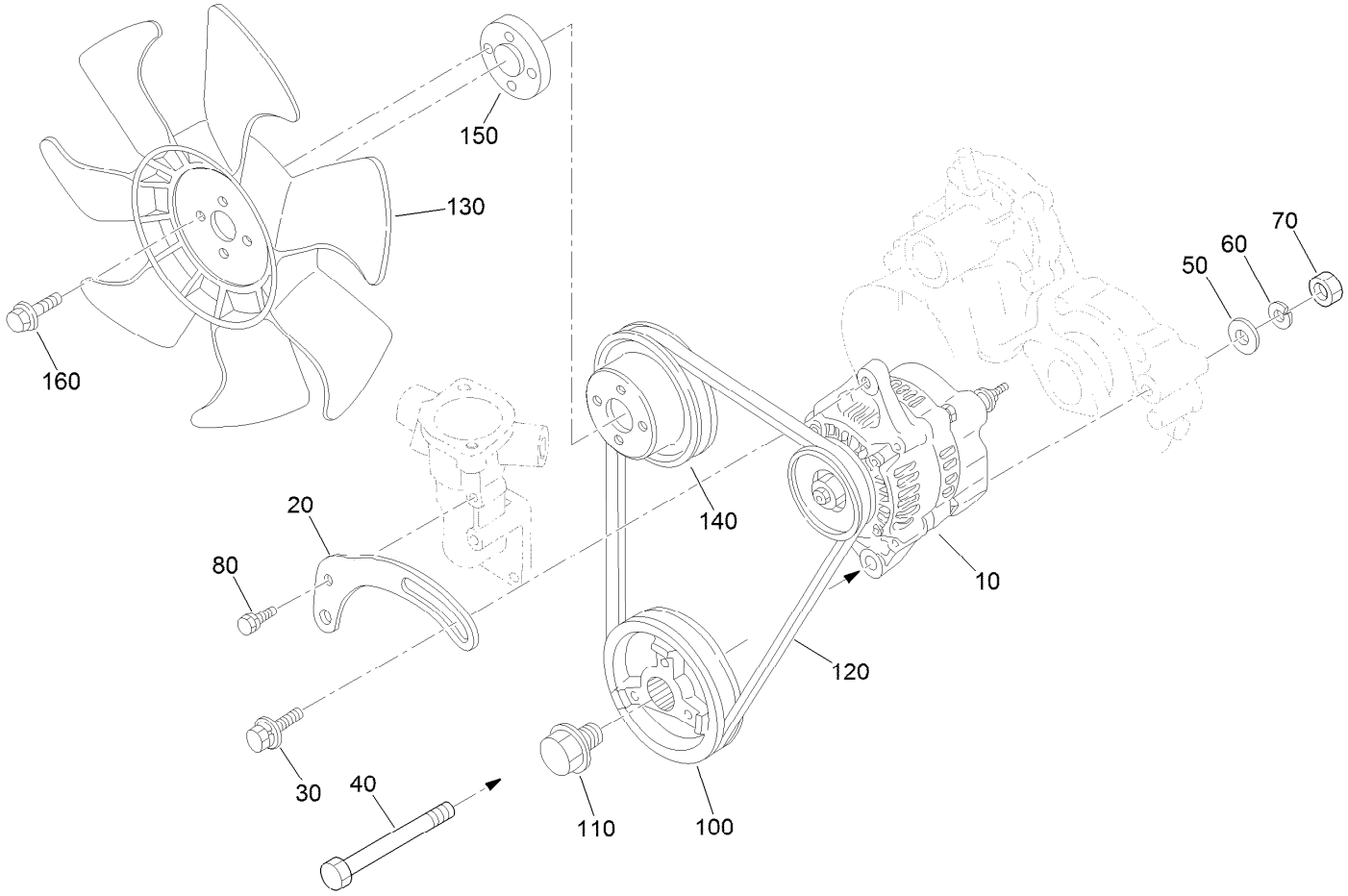

Alternator, Pulley and Fan Assembly

Ref.	Part Number	Qty.	Description
10	98-9474	1	Alternator ASM
20	112-7047	1	Stay-Dynamo
30	108-7088	1	Bolt
40	98-9360	1	Bolt
50	98-9366	1	Washer-Plain
60	98-7738	1	Washer-Spring
70	98-7737	1	Nut
80	98-7692	1	Bolt
100	98-9473	1	Pulley-Drive, Fan
110	98-9585	1	Bolt
120	104-3494	1	Belt-V
130	104-4246	1	Fan-Engine
140	130-1567	1	Pulley-Fan
150	108-2872	1	Collar-Fan
160	108-2873	4	Bolt-Flange

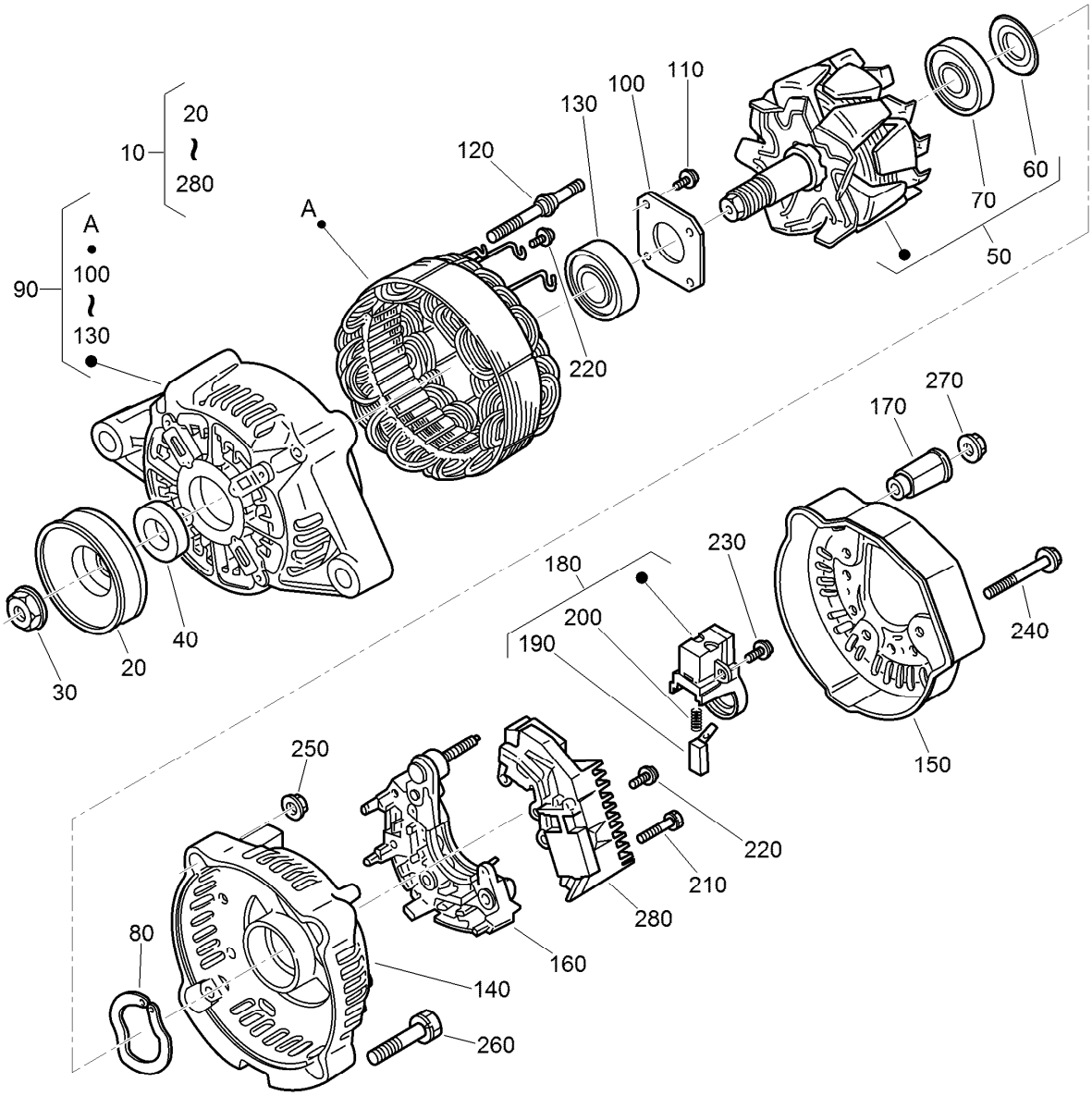

Alternator Components Assembly

Ref.	Part Number	Qty.	Description
10	98-9474	1	Alternator ASM
20	98-9453	1	Pulley-Dynamo
30	98-7708	1	Nut
40	98-7709	1	Collar
50	107-0136	1	Rotor ASM
60	98-7711	1	Cover-Bearing
70	107-0138	1	Bearing-Ball
80	98-7713	1	Washer-Thrust
90	107-0139	1	Drive End Frame ASM
100	98-7715	1	Plate-Retainer
110	98-7716	4	Screw-Head, Round
120	98-7717	2	Bolt-Through
130	107-0137	1	Bearing-Ball
140	107-9087	1	Frame-End

Ref.	Part Number	Qty.	Description
150	107-0140	1	Cover-End
160	127-1612	1	Rectifier ASM
170	98-7722	1	Bushing-Insulation
180	107-0141	1	Brush Holder ASM
190	98-7724	2	Brush
200	98-7725	2	Spring-Brush
210	98-7726	2	Screw-Head, Round
220	98-7727	6	Screw-Head, Round
230	98-7728	1	Screw-Head, Round
240	98-7729	3	Bolt
250	98-7730	2	Nut
260	98-7731	2	Bolt
270	98-7732	1	Nut
280	110-3799	1	Regulator ASM

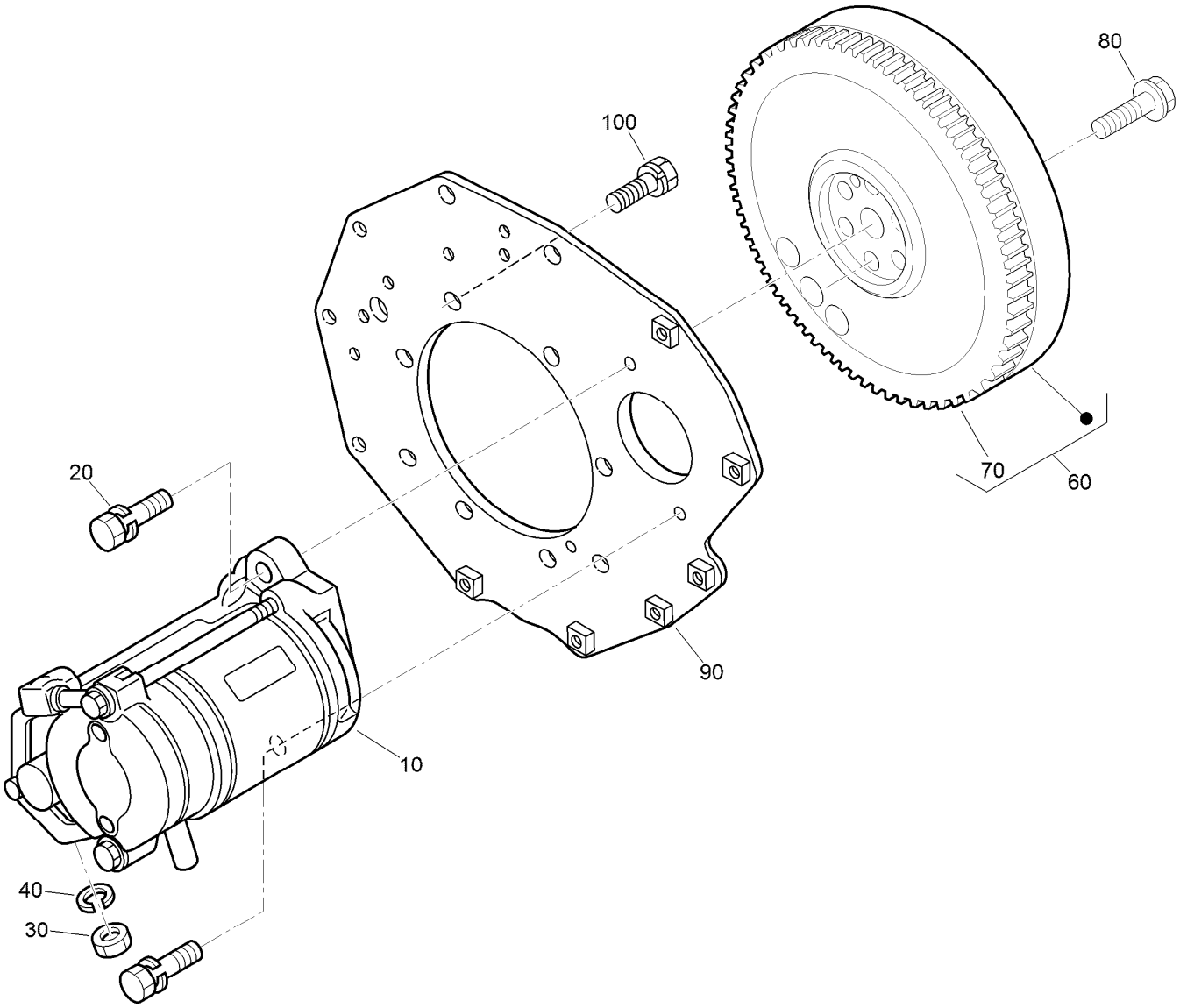

Starter and Flywheel Assembly

Ref.	*Part Number*	*Qty.*	*Description*
10	98-9705	1	Starter ASM
20	98-7697	2	Bolt
30	98-7739	1	Nut
40	105-2893	1	Washer-Spring
60	105-3784	1	Flywheel ASM
70	115-3015	1	Gear-Ring
80	98-9537	6	Bolt-Flywheel
90	98-9486	1	Plate-End, Rear
100	98-9392	8	Bolt

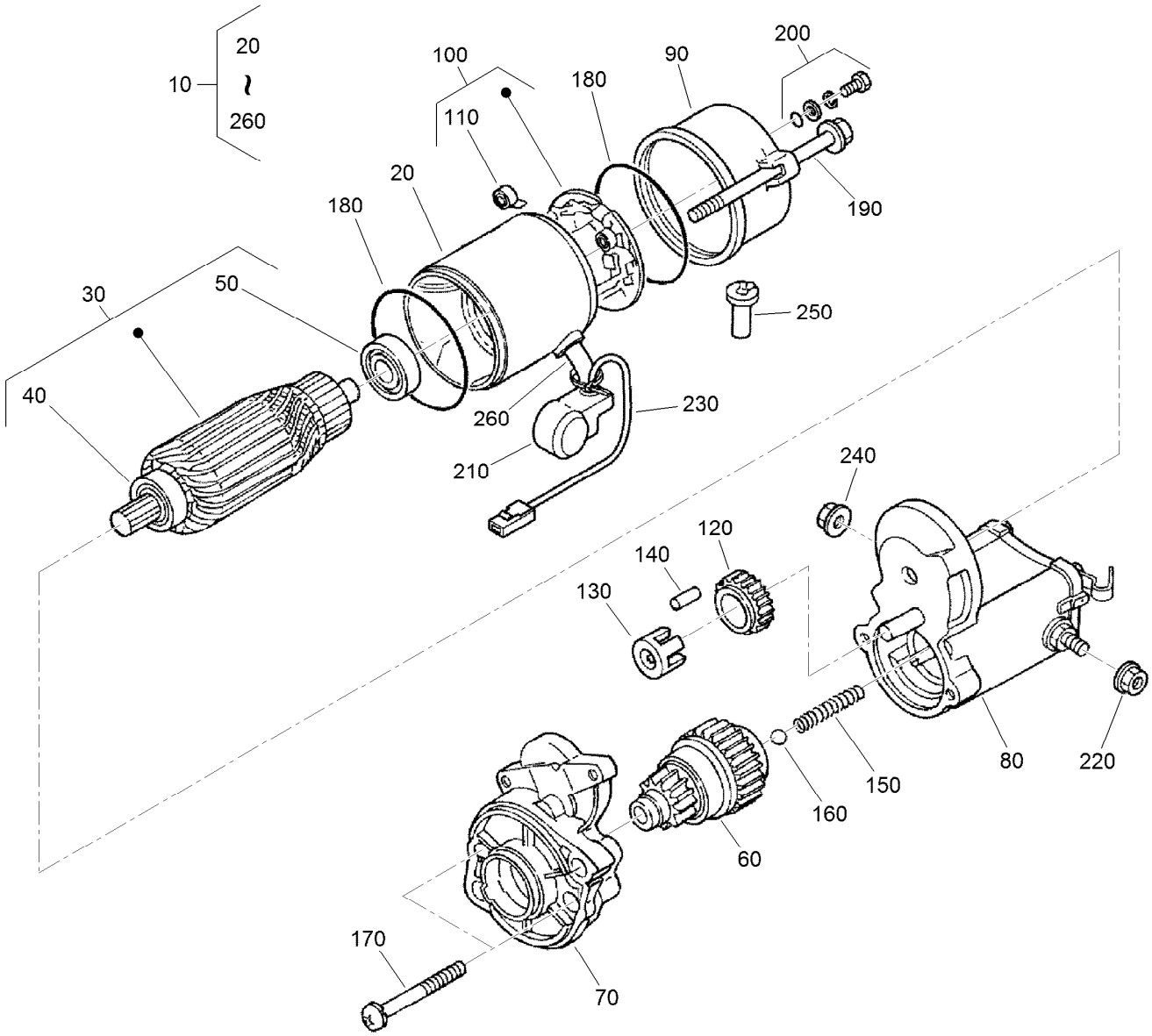

Starter Component Assembly

Ref.	Part Number	Qty.	Description
10	98-9705	1	Starter ASM
20	104-8608	1	Yoke ASM
30	98-7742	1	Armature ASM
40	98-7744	1	Bearing
50	98-7743	1	Bearing
60	99-8373	1	Clutch-Running, Over
70	99-8374	1	Frame-End, Drive
80	105-3746	1	Magnetic Switch ASM
90	98-7748	1	Frame-End
100	98-7749	1	Brush Holder ASM
110	98-7750	4	Spring-Brush
120	98-7751	1	Gear
130	98-7752	1	Retainer

Ref.	Part Number	Qty.	Description
140	98-7753	5	Roller
150	98-7754	1	Spring
160	98-7755	1	Ball
170	98-7756	2	Bolt
180	98-7757	2	O-Ring
190	100-9240	2	Bolt
200	98-7758	2	Bolt ASM
210	99-8375	1	Cover
220	99-8371	1	Nut-Hex
230	98-9711	1	Cord-Solenoid, Stop
240	99-8376	1	Nut-Hex
250	98-7759	1	Pipe-Drain
260	98-9712	1	Band-Cover

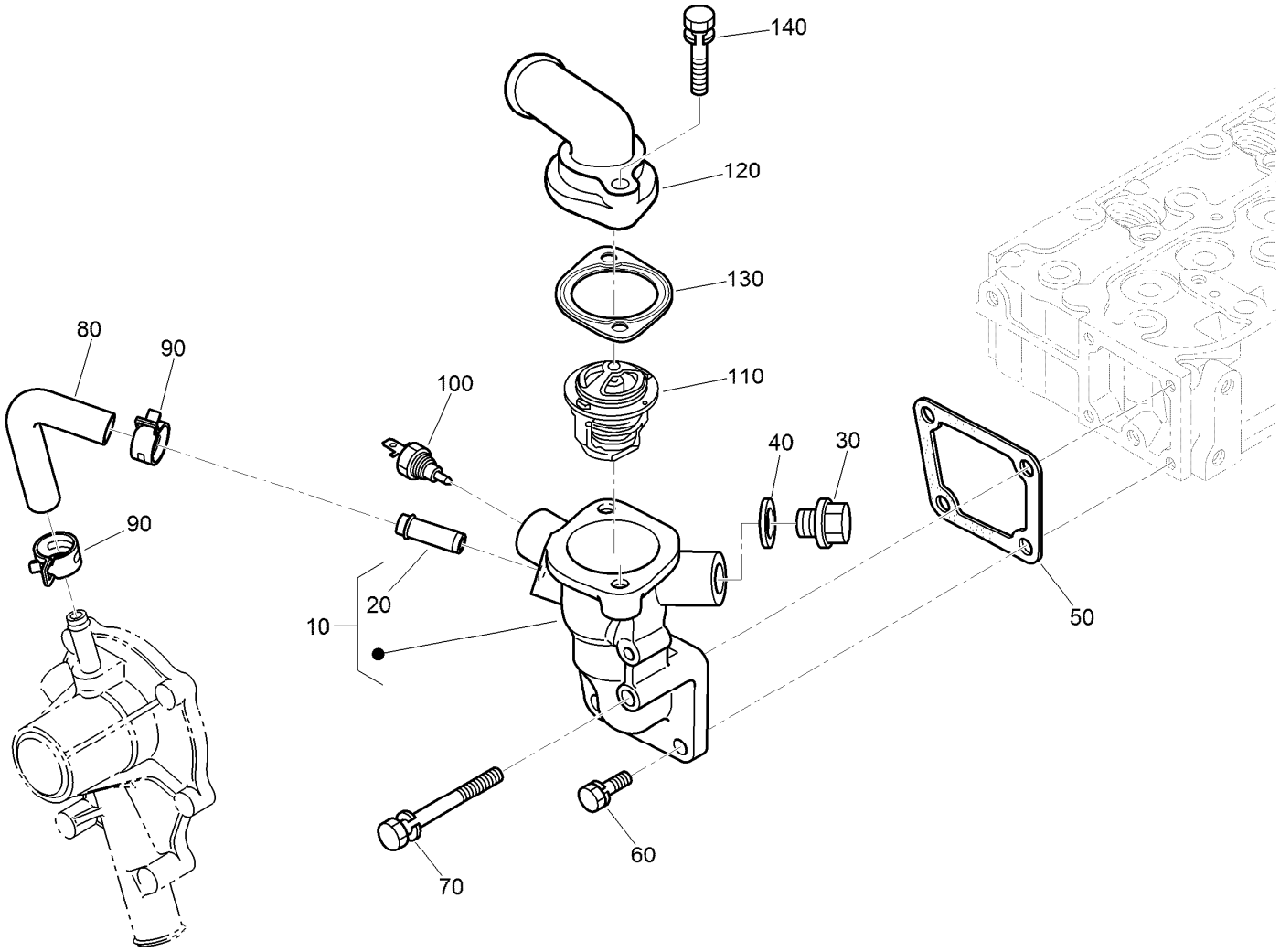

Water Flange and Thermostat Assembly

Ref.	Part Number	Qty.	Description
10	98-9713	1	Water Flange ASM
20	98-9580	1	Pipe-Return, Water
30	105-3747	1	Plug
40	99-3583	1	Gasket
50	98-9638	1	Gasket-Flange, Water
60	98-7692	3	Bolt
70	98-9356	1	Bolt
80	98-9578	1	Pipe-Return, Water
90	125-9078	2	Clamp-Hose
100	98-9719	1	Thermoswitch
110	98-7778	1	Thermostat ASM
120	104-4804	1	Outlet-Water
130	105-3748	1	Gasket-Thermostat
140	98-7777	2	Bolt

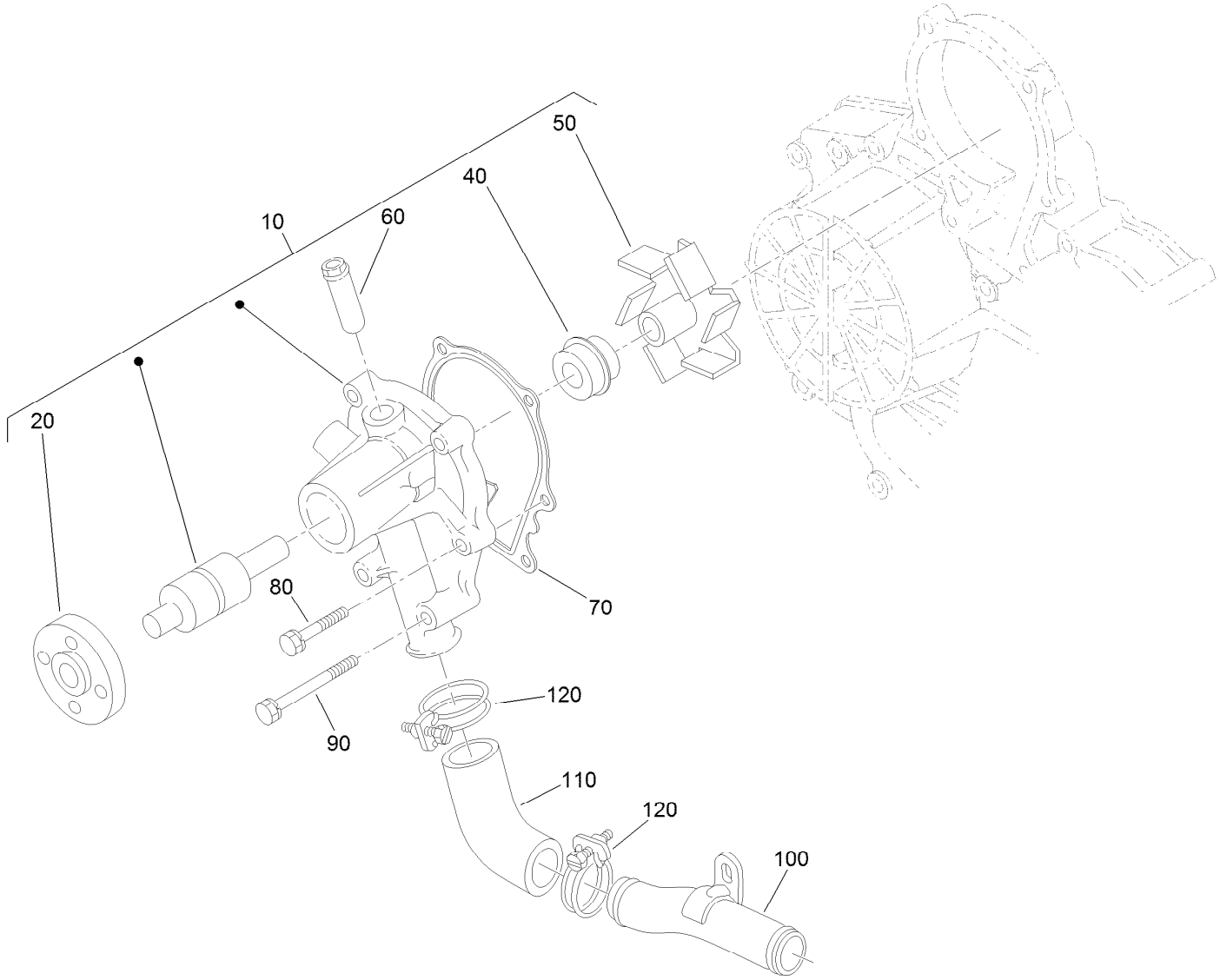

Water Pump Assembly

Ref.	*Part Number*	*Qty.*	*Description*
10	107-9089	1	Water Pump ASM
20	99-3516	1	Flange-Pump, Water
40	105-3750	1	Mechanical Seal ASM
50	112-7017	1	Impeller-Pump, Water
60	100-1932	1	Pipe-Return, Water
70	99-3454	1	Gasket-Pump, Water
80	98-9353	4	Bolt
90	107-9090	2	Bolt
100	98-9716	1	Pipe-Water
110	107-9091	1	Pipe-Water
120	127-0439	2	Clamp-Hose

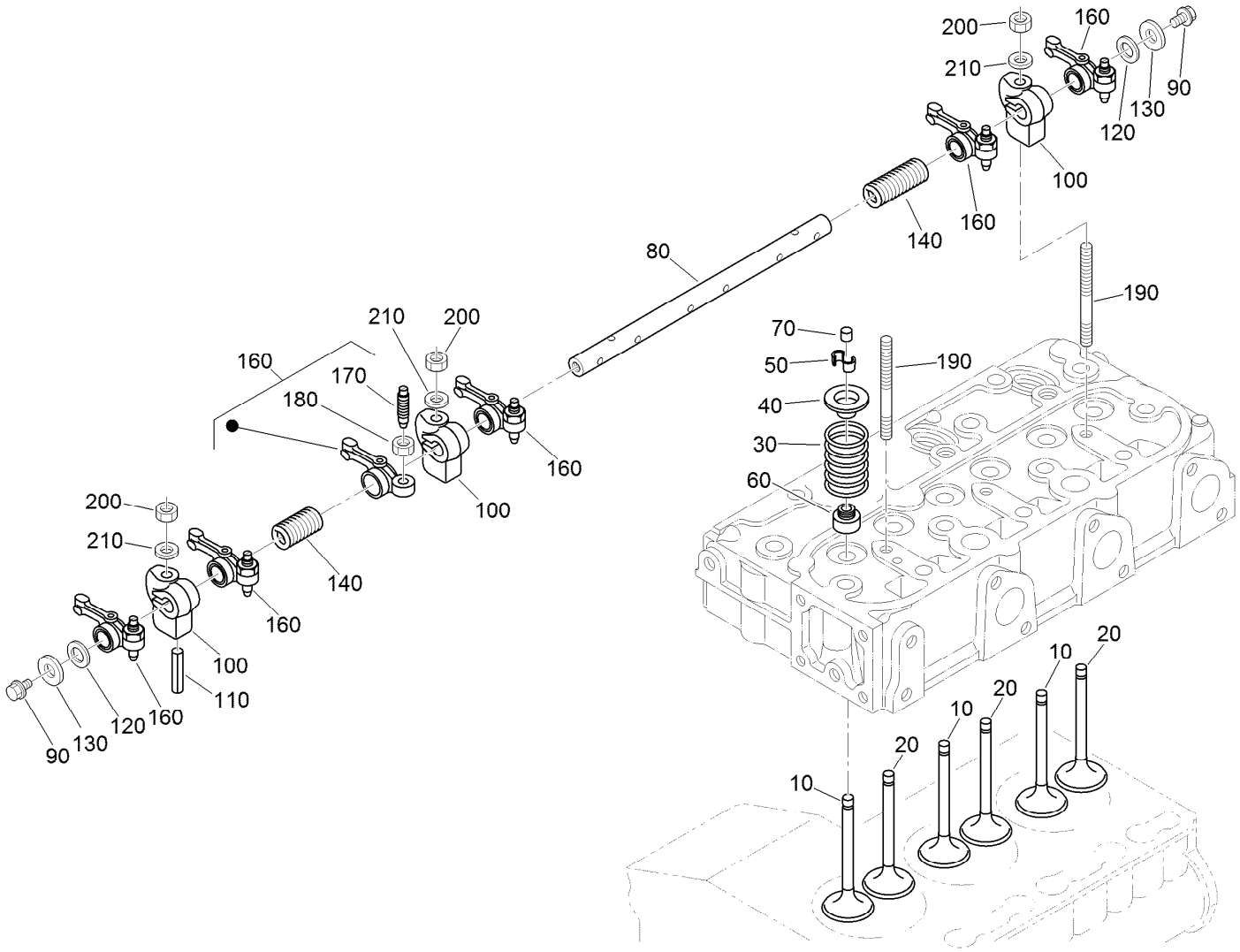

Valve and Rocker Arm Assembly

Ref.	Part Number	Qty.	Description
10	112-7018	3	Valve-Inlet
20	120-2564	3	Valve-Exhaust
30	98-9648	6	Spring-Valve
40	107-9092	6	Retainer-Spring
50	117-7572	6	Collet-Spring, Valve
60	99-8385	6	Seal-Stem, Valve
70	98-9497	6	Cap-Valve
80	130-1248	1	Shaft-Arm, Rocker
90	99-8363	2	Bolt-Flange
100	98-9505	3	Bracket-Arm, Rocker

Ref.	Part Number	Qty.	Description
110	105-3758	1	Pin-Spring
120	98-9507	2	Washer-Shaft, Rocker Arm
130	110-3832	2	Washer-Plain
140	98-9504	2	Spring-Arm, Rocker
160	112-7020	6	Rocker Arm ASM
170	98-9502	6	Screw-Adjusting
180	98-9503	6	Nut
190	98-9506	3	Stud
200	98-9393	3	Nut
210	98-9385	3	Washer-Flat

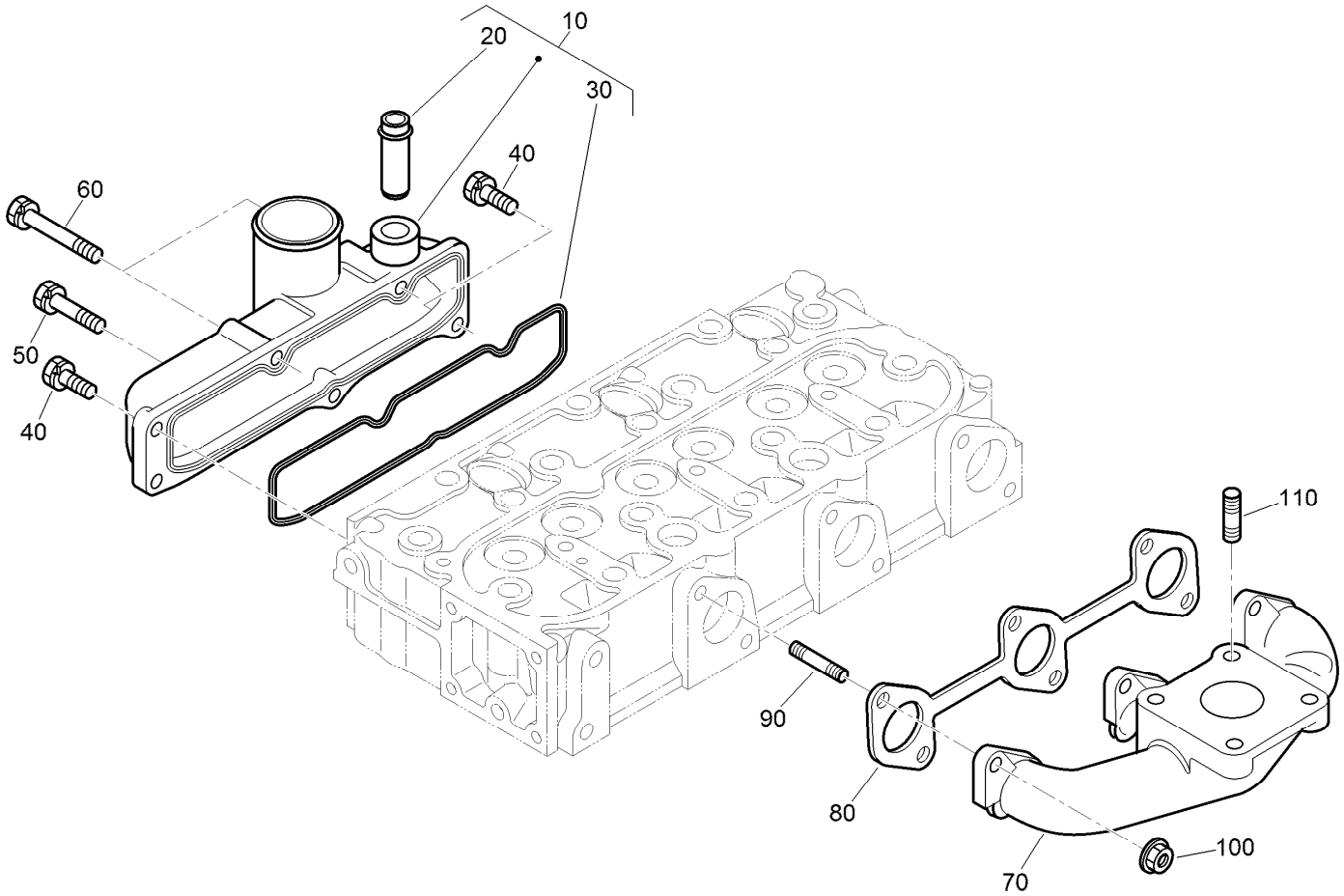

Inlet and Exhaust Manifold Assembly

Ref.	*Part Number*	*Qty.*	*Description*
10	107-7843	1	Manifold Inlet ASM
20	98-9492	1	Joint-Pipe, Breather
30	98-9609	1	Gasket-Manifold, Inlet
40	127-0403	3	Bolt-Flange
50	98-9353	1	Bolt
60	125-9063	2	Bolt-Sems
70	107-9093	1	Manifold-Exhaust
80	99-8327	1	Gasket-Manifold, Exhaust
90	98-9588	6	Stud
100	98-9665	6	Nut
110	98-7769	4	Stud

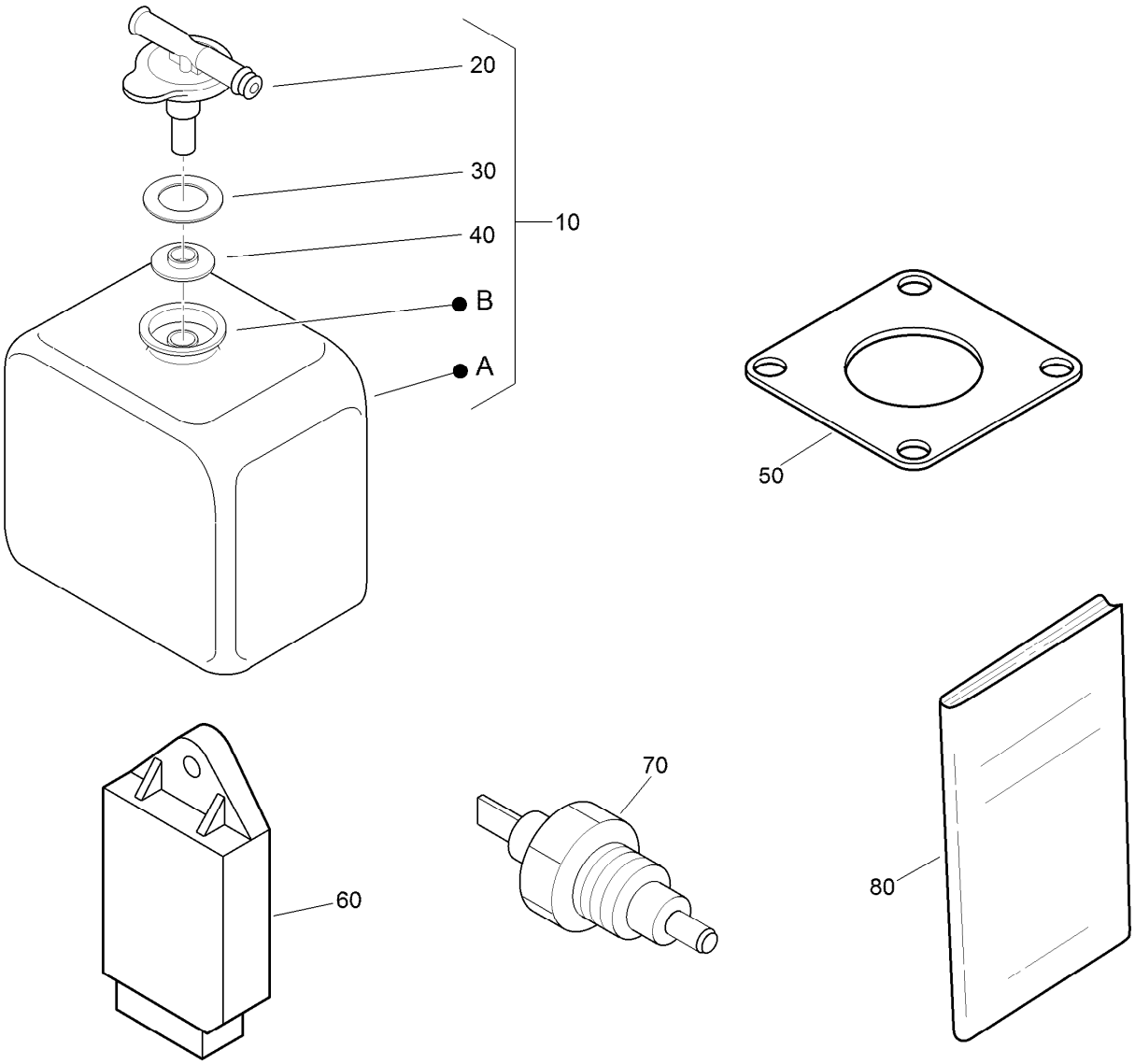

Miscellaneous Engine Parts

Ref.	*Part Number*	*Qty.*	*Description*
10	104-9318	1	Bottle-Overflow
20	115-4132	1	Cap
30	105-3755	1	Gasket
40	105-3756	1	Plate
50	99-8343	1	Gasket-Muffler
60	98-7611	1	Controller-Glow
70	106-7772	1	Thermoswitch
80	130-1543	1	Manual-Operator

Attachments and Accessories

For 03910 Reelmaster 3550 Traction Unit

Product Name	Model/Part
18in 8-Blade DPA Cutting Unit	03911
18in 11-Blade DPA Cutting Unit	03912
22in 8-Blade DPA Cutting Unit	03913
Premium All Season Hydraulic Fluid (55 Gallon Drum)	108-1177
Premium All Season Hydraulic Fluid (5 Gallon Pail)	108-1178
Premium All Purpose Grease (Tube)	108-1190
Gauge Bar Assembly	108-6715
Operator Fan Kit - US Sales Only, 3in ROPS Post	110-8804
Premium Synthetic Bio-Degradable Hydraulic Fluid (5 Gallon Pail)	119-2157
Premium Synthetic Bio-Degradable Hydraulic Fluid (55 Gallon Drum)	119-2158
Brush and Handle Kit	29-9100
Bimini Sunshade for 2-Post Roll-Over Protection System	30358
Diagnostic Display Box	85-4750

Notes:

TORO®

Count on it.