1978

FORM NO. 3311-108

TORO®

MODEL NO. 20575 — 8000001 THRU 8007500

PARTS CATALOG

21" S.P. REAR BAGGER FINGERTIP

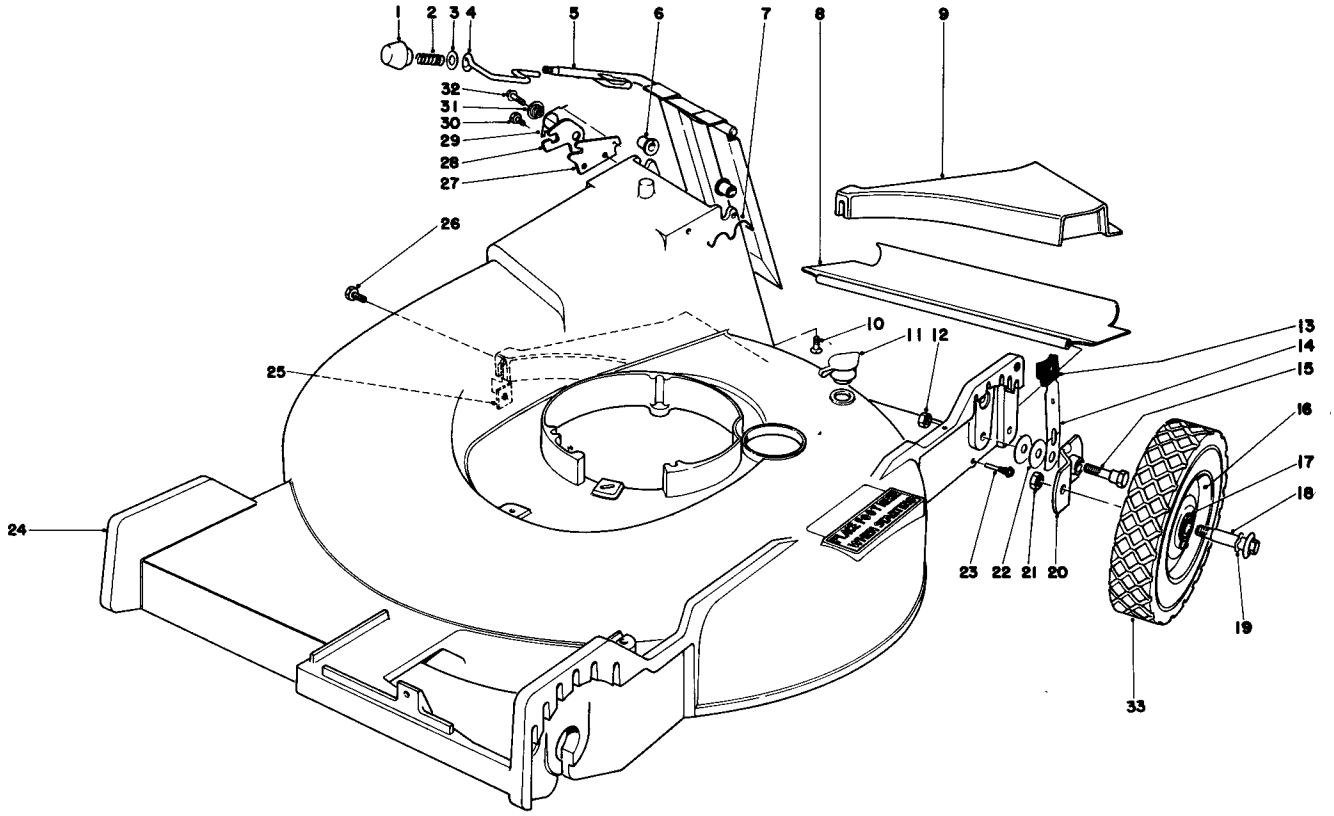

HOUSING ASSEMBLY

Ref. No.	Part No.	Description	No. Used
1	233-37	Knob	1
2	23-0920	Spring — Compression	1
3	23-1120	Washer	1
4	23-0940	Latch Door	1
5	27-7910	Door Handle	1
6	23-0880	Bushing	2
7	23-0200	Door Retainer	1
8	23-0560	Rear Safety Shield	1
9	23-0360	Insert Rear	1
10	32144-17	Flat Hd. Screw	2
11	6-4500	Washout Plug	1
12	32146-5	Locknut	2
13	25-7740	Knob — Arm	2
14	25-8000	Spring Arm	2
15	25-3440	Pivot Screw	2

Ref. No.	Part No.	Description	No. Used
16	26-2960	Wheel & Tire Assembly (Incl. Ref. #17 & 33)	2
17	251-180	Bearing	4
18	3-2652	Wheel Bolt	2
19	3290-393	Wave Washer	2
20	24-7710	Pivot Arm "A"	1
*	23-9120	Pivot Arm "B"	1
21	32146-6	Locknut	2
22	5-4460	Pivot Washer	4
23	8-6160	Pivot Screw	2
24	8-0229	Housing	1
25	26-0660	Nut — Special	1
26	32104-114	Screw Self Tapping	1
27	23-1040	Latch Plate	1
28	23-1190	Latch Safety	1

*Not Illustrated

COPYRIGHT 1977 BY
The Toro Company
MINNEAPOLIS, MINN. 55420 — U.S.A.

PRICE $1.00

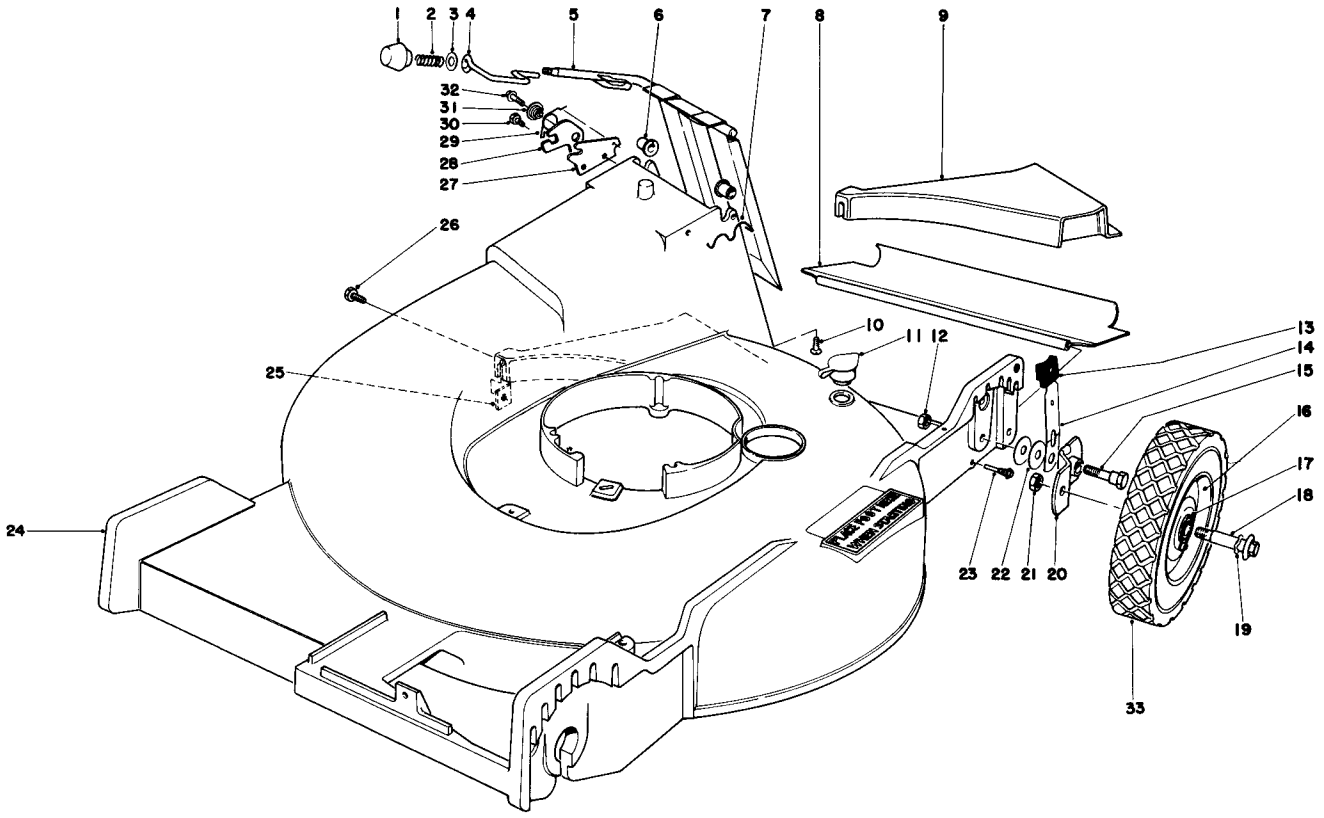

HOUSING ASSEMBLY (Continued)

Ref. No.	Part No.	Description	No. Used
29	23-1200	Torsion Spring	1
30	32104-17	Hex Hd. Tapping Screw	1
31	23-1180	Latch Spacer	1

Ref. No.	Part No.	Description	No. Used
32	11-9760	Screw Thread Forming	1
33	5-3543	Tire	2
*	26-9510	Replacement Stud Kit	1
*	6-9999	Loose Parts Kit	1

*Not Illustrated

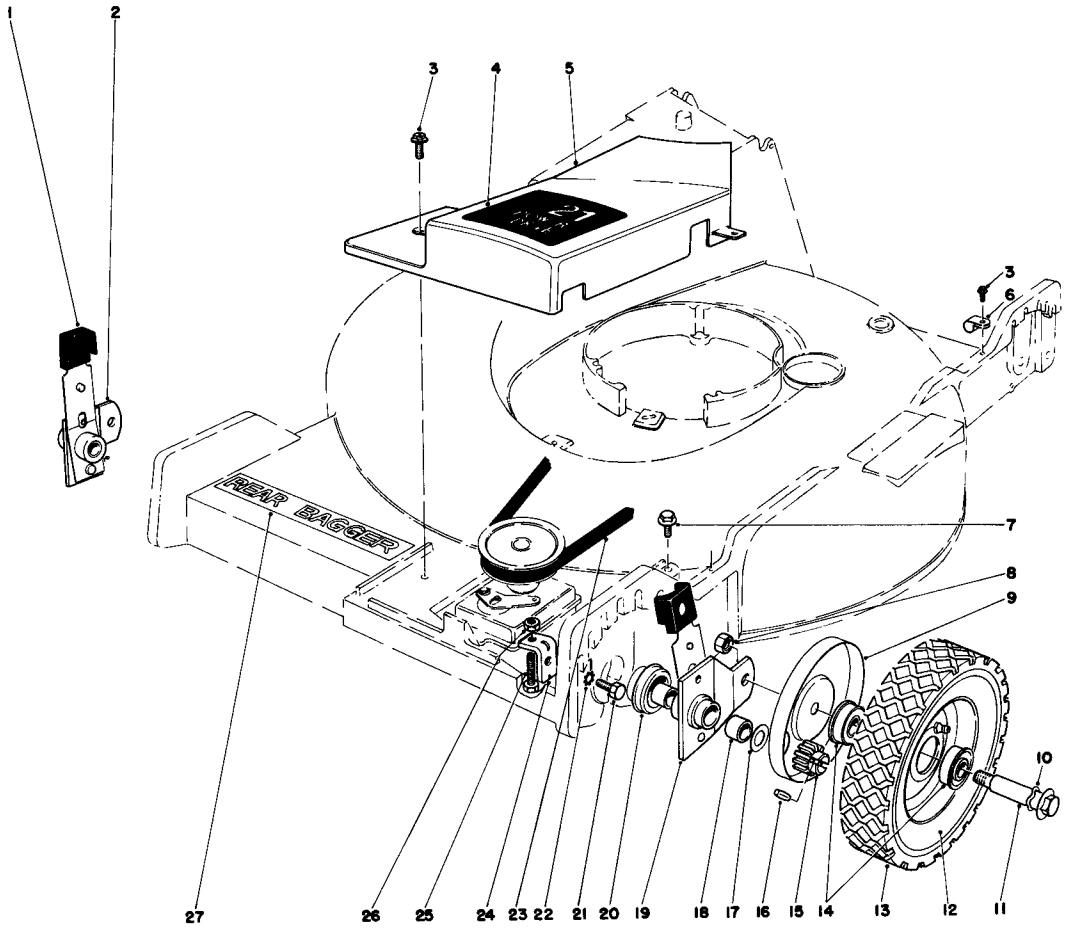

FRONT WHEEL AND PIVOT ARM ASSEMBLY

Ref. No.	Part No.	Description	No. Used
1	25-7740	Knob Arm	2
2	25-8190	Pivot Arm Assembly (Incl. Ref. #17)	1
3	12-5450	Screw Special	4
4	33-2940	Decal Belt Cover	1
5	33-2950	Belt Cover	1
6	2412-52	Cable Clamp	1
7	32144-11	Screw Hex Hd.	1
8	32146-6	Locknut	2
9	23-0280	Wheel Cover	2
10	3290-393	Wave Washer	2
11	26-4430	Wheel Bolt	2
12	26-3010	Wheel & Tire Assembly (Incl. Ref. #13 & 14)	2
13	5-3543	Tire	2

Ref. No.	Part No.	Description	No. Used
14	251-180	Bearing	4
15	18-9690	Pinion Gear	2
16	3284-3	Coil Pin	2
17	18-9810	Thrust Washer	2
18	256-206	Bushing	4
19	25-8180	Pivot Arm Assembly (Incl. Ref. #18)	1
20	23-0380	End Cap	2
21	322-5	Capscrew	1
22	3255-8	Lockwasher	1
23	24-9730	V-Belt	1
24	25-7560	Bracket – Adjustment	1
25	3-7281	Screw	1
26	32146-17	Jam Nut	1
27	33-2320	Decal Rear Bagger	1

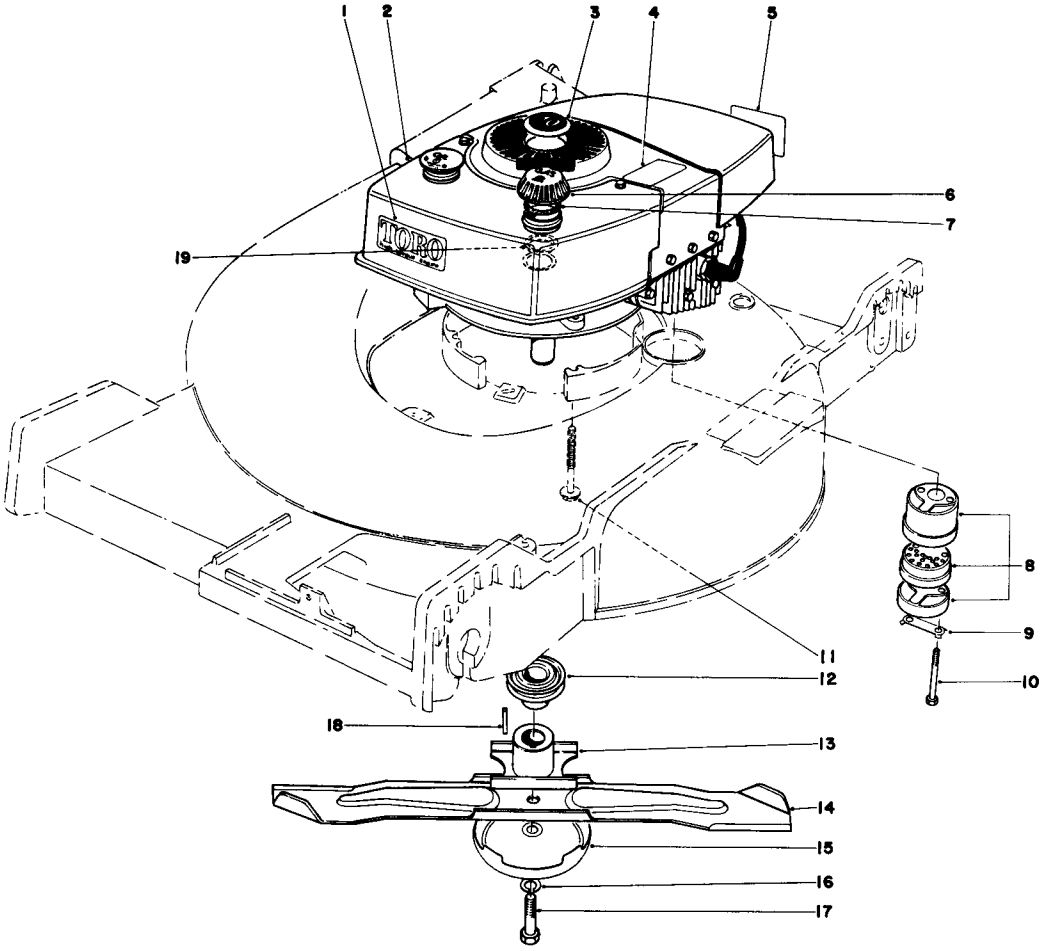

ENGINE ASSEMBLY

Ref. No.	Part No.	Description	No. Used
1	23-1260	Decal High Torque	1
2	221-525	Engine	1
3	21-4870	Plug Button	1
4	25-1050	Decal Fingertip Lockout	1
5	20-2710	Decal – Maintenance	1
6	27-7870	Gas Cap Assembly (Incl. Ref. #7 & 19)	1
7	2210-144	Gasket Gas Cap	1
8	5-4769	Muffler Assembly (Incl. Ref. #9 & 10)	1
9	3-5094	Locking Clip	1

Ref. No.	Part No.	Description	No. Used
10	321-20	Hex Hd. Screw	2
11	11-0580	Screw	3
12	21-5580	Pulley Driver	1
13	23-0110	Blade Retainer	1
14	26-0880	Blade	1
15	8-4240	Anti-Scalp Cup	1
16	3253-22	Lockwasher	1
17	23-0080	Blade Screw	1
18	27-8590	Square Key	1
19	2210-143	Baffle – Gas Cap	1

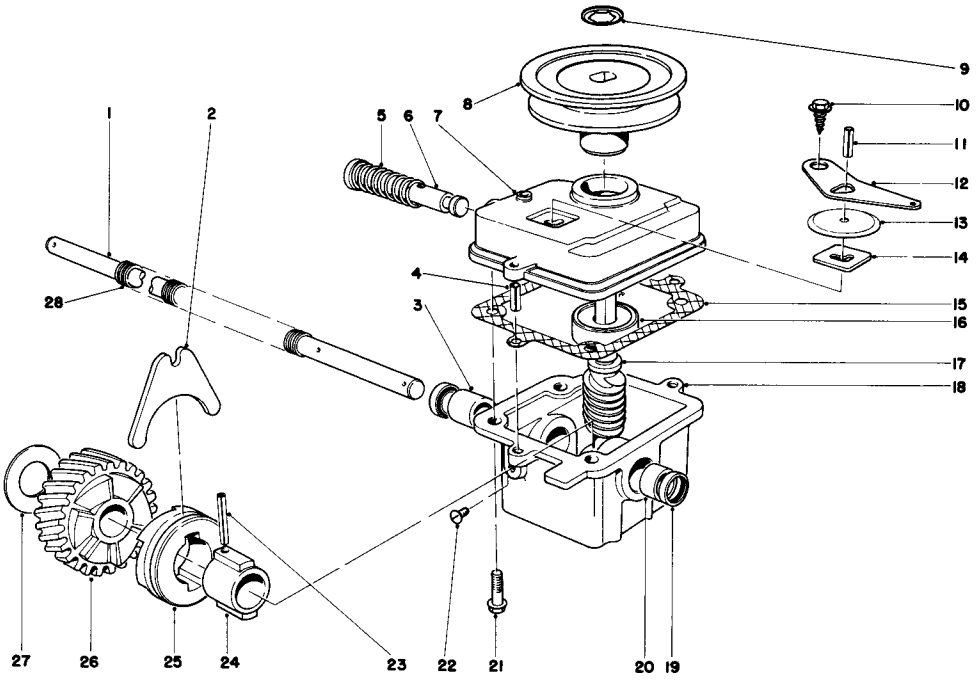

GEAR CASE ASSEMBLY

Ref. No.	Part No.	Description	No. Used
1	29-4630	Drive Shaft	1
2	5-3247	Shifter Fork	1
3	256-263	Bushing	1
4	32121-1	Roll Pin	2
5	3-0731	Spring	1
6	5-3248	Shifter Rod	1
7	5-3283	Cover Gear Case	1
8	20-2780	Pulley	1
9	3290-346	Push On Retainer	1
10	32140-64	Self Tapping Screw	1
11	32121-23	Roll Pin	1
12	5-3252	Shifter Arm	1
13	3-2615	Transmission Dust Cover	1
14	3-0681	Latch Plate	1
15	3-0734	Gasket – Gear Case	1

Ref. No.	Part No.	Description	No. Used
16	251-144	Ball Bearing	1
17	18-9700	Worm Shaft	1
18	5-4459	Gear Case (Incl. Ref. #3, 19-20)	1
19	253-140	Oil Seal	2
20	256-110	Bushing	1
21	11-9760	Screw	4
22	28-1550	Screw Nylon	1
23	32121-88	Coil Pin	1
24	3-0721	Sleeve	1
25	19-5660	Clutch Jaw	1
26	18-9740	Helical Gear	1
27	3-0724	Thrust Washer	1
28	24-8690	Drive Shaft Cover	1
*	26-0650	Gear Case Assembly	1

*Not Illustrated

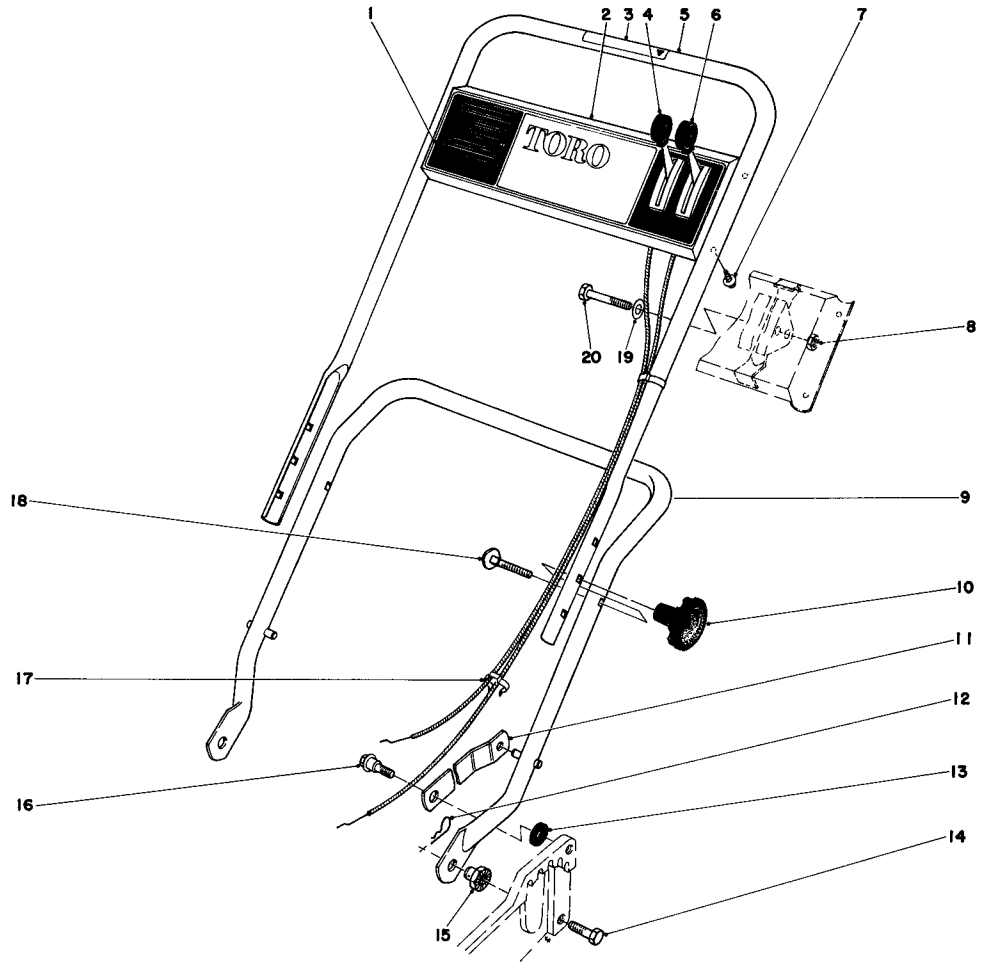

HANDLE ASSEMBLY

Ref. No.	Part No.	Description	No. Used
1	33-5150	Decal Control Plate	1
2	36-2810	Control Plate	1
3	29-6290	Decal Handle Danger	1
4	33-2533	Throttle Control	1
5	33-4290	Upper Handle	1
6	33-2523	Traction Control	1
7	32104-76	Self Tapping Screw	4
8	32152-4	Locknut	1
9	33-4340	Lower Handle	1
10	19-4050	Handle Release Knob	2

Ref. No.	Part No.	Description	No. Used
11	26-0760	Handle Latch	2
12	3290-255	Hair Pin Cotter	2
13	3-3287	Latch Spacer	2
14	322-5	Capscrew	2
15	12-2080	Handle Pivot Nut	2
16	5-2490	Shoulder Screw	2
17	218-465	Clip Conduit	1
18	6-6330	Handle Screw	2
19	3256-22	Washer	1
20	321-15	Capscrew	1

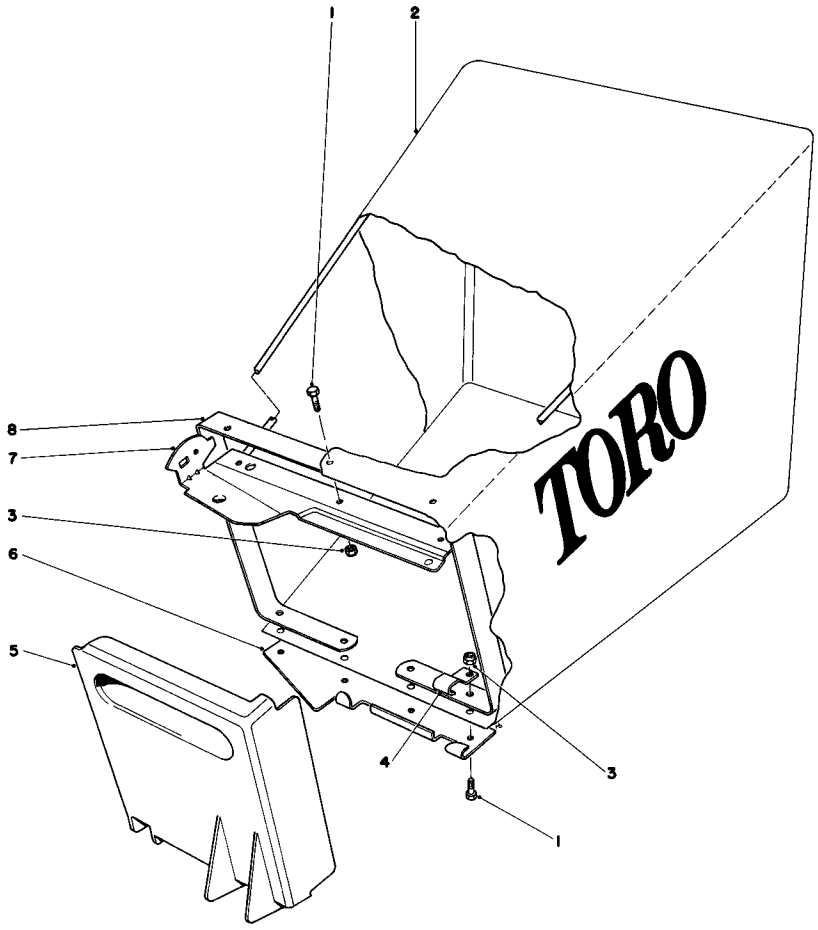

GRASS BAG ASSEMBLY

Ref. No.	Part No.	Description	No. Used
1	3290-321	Hex Hd. Machine Screw	7
2	6-1389	Grass Bag Assembly	1
3	3290-419	Locknut	7
4	23-5100	Support Bracket	1
5	23-1140	Bag Door	1
6	23-1150	Door Bracket	1
7	27-8170	Bag Frame	1
8	23-1110	Bag Support	1
*	6-7859	Grass Bagging Kit (Incl. Ref. 1 thru 8)	1

*Not Illustrated

ENGINE TECUMSEH MODEL NO. TNT 100-10049A

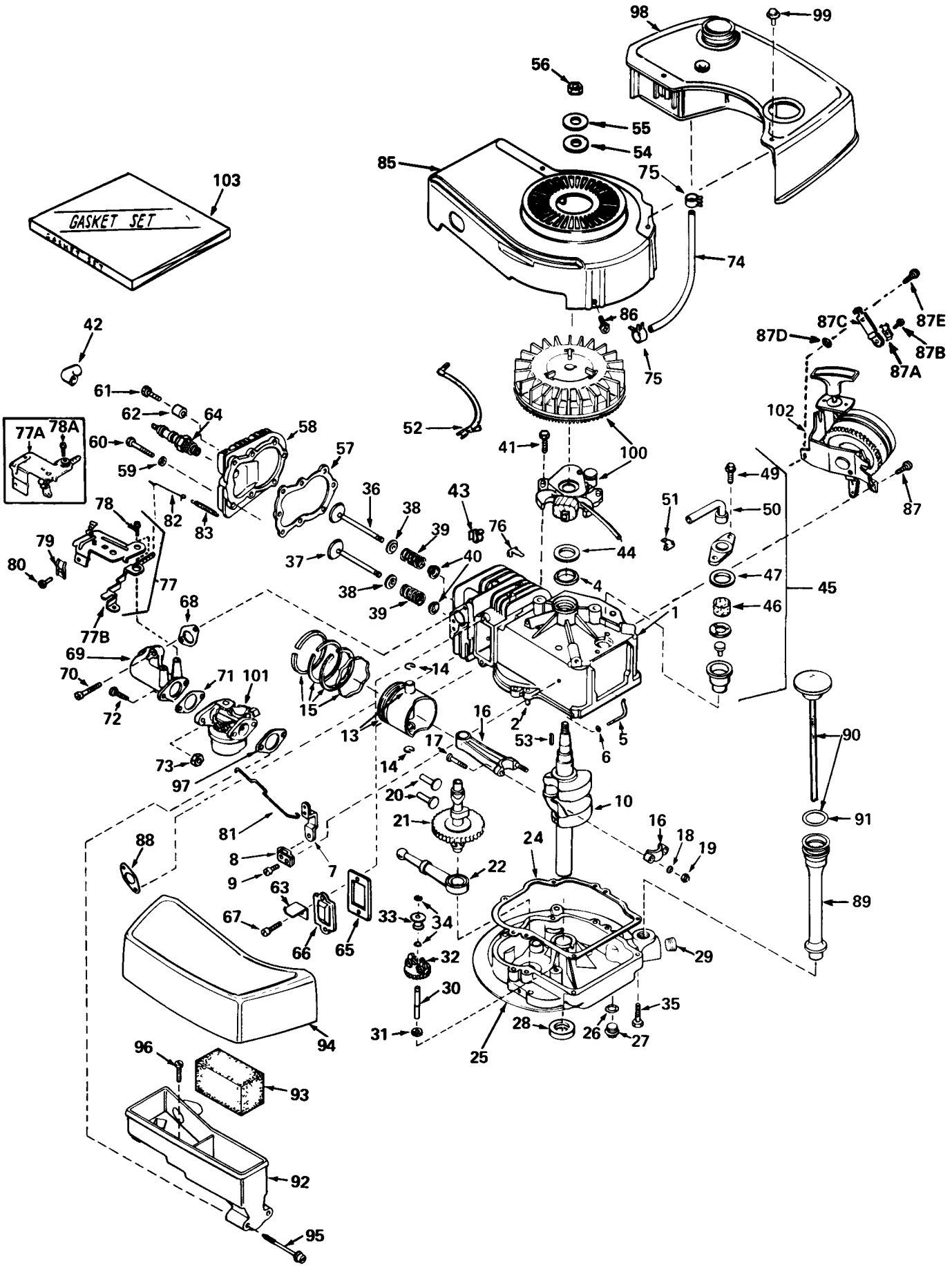

ENGINE TECUMSEH MODEL NO. TNT 100-10049A

Ref. No.	Part No.	Description	No. Used
1	33883	Cylinder Assembly (Incl. Ref. #2, 4 & 87)	1
2	26727	Pin, Dowel	2
4	29183	Seal, Oil	1
5	30589	Rod, Governor (Incl. Ref. #6)	1
6	28277	Washer, Flat	1
7	32651	Lever, Governor	1
8	31335	Clamp, Governor Lever	1
9	650548	Screw, Hex Slotted Washer Hd.	1
10	34233A	Crankshaft	1
13	32603	Piston & Pin Assembly (Incl. 2 of No. 14) (Std.)	1
13	32604	Piston & Pin Assembly (Incl. 2 of No. 14) (.010 Oversize)	1
13	32605	Piston & Pin Assembly (Incl. 2 of No. 14) (.020 Oversize)	1
14	20381	Ring, Piston Pin Retaining	2
15	32606	Ring Set, Piston (Std.)	1
15	32607	Ring Set, Piston (.010 Oversize)	1
15	32608	Ring Set, Piston (.020 Oversize)	1
16	30963B	Rod Assembly, Connecting (Incl. Ref. #17, 18 & 19)	1
17	26706	Bolt, Connecting Rod	2
18	20747	Washer, Connecting Rod Bolt	2
19	27573	Nut, Connecting Rod	2
20	27241	Lifter, Valve	2
21	33553	Camshaft (Mech. Comp. Release)	1
22	29914	Pump Assembly, Oil	1
24	*26750A	Gasket, Mounting Flange	1
25	33898	Flange Assembly, Mounting (Incl. Ref. #27, 28, 29 & 30)	1
26	*28833	Gasket, Oil Drain Plug	1
27	27244	Plug, Oil Drain	1
28	26208	Seal, Oil	1
29	33885	Plug, Oil Drain (Hex Countersunk)	1
30	30574	Shaft, Mechanical Governor	1
31	30590A	Washer, Flat	1
32	30591	Gear Assembly, Governor (Incl. Ref. #31)	1
33	30588A	Spool, Governor	1
34	29193	Ring, Retaining	2
35	650488	Screw, Hex Hd. Sems	6
36	29314A	Valve, Intake (Std.) (Incl. Ref. #38, 39 & 40)	1
36	29315B	Valve, Intake (1/32" Oversize) (Incl. Ref. #38, 39 & 40)	1
37	29313B	Valve, Exhaust (Std.) (Incl. Ref. #38, 39 & 40)	1
37	29315B	Valve, Exhaust (1/32" Oversize) (Incl. Ref. #38, 39 & 40)	1
38	31671	Cap, Upper Valve Spring	2
39	31672	Spring, Valve	2
40	31673	Cap, Lower Valve Spring	2
41	650489	Screw, Hex Hd. Sems	2
42	610118	Cover, Spark Plug	1
43	27275	Clip, Lead Wire	1
44	33876	Gasket, Stator	1
45	34214	Breather Assembly (Incl. Ref. #46, 47, 49, 50 & 51)	1
46	33734	Element, Breather	1
47	*33735	Gasket, Breather	1
49	650768	Screw, Hex Hd. Thread Forming W/Conical Washer	2
50	33886	Tube, Breather	1
51	33887	Clip, Breather Tube	1
52	34230	Wire, Ground	1
53	610961	Key, Flywheel	1
54	650791	Washer, Flat	1
55	650763	Washer, Belleville	1
56	650607	Nut, Flywheel	1
57	*33015	Gasket, Cylinder Head	1
58	33016	Head, Cylinder	1
59	26073	Washer	5
60	6021	Screw, Hex Hd. Cap	5
61	650697	Screw, Hex Hd. Cap	3
62	33892	Spacer	3
63	30593	Clip, Magneto Wire	1
64	33636	Plug, Spark (Champion J-8 or Equivalent)	1
65	*27234	Gasket, Valve Spring Cover	1
66	32755	Cover, Valve Spring Box	1
67	650128	Screw, Fil. Slotted Hd. Sems	2
68	*30188	Gasket, Intake Pipe	1
69	33004	Pipe, Intake	1
70	650451	Screw, Fil. Flex Hd. Self-locking	2
71	*31688	Gasket, Carburetor	1
72	6202	Screw, Hex Hd. Cap Sems	2
73	29752	Nut & Lockwasher Assembly	2
74	30705	Line, Fuel	1
75	26460	Clamp, Fuel Line	2
76	29443	Clip Fuel Line	1
77	33889A	Control Assy., Speed (Incl. Nos. 77B & 78) (Used on Late Production)	1
77A	33889A	Control Assy., Speed (Riveted assembly used on Early Production, which is now replaced by loose pieces shown above, Ref. No. 77)	1
77B	34310	Lever, Control (Used on Late Production)	1
78	650804	Screw, Hex washer shoulder hd. thread forming (Used on Late Production)	1
78A	650783	Screw, Hex washer hd. thread forming Sems (Used with Riveted Assembly on Early Production Only)	1
79	27793	Clip, Conduit	1
80	28942	Screw, Slotted Hex Hd. Sems	1
81	33133	Link, Governor	1
82	33295	Link, Governor Spring	1
83	33890	Spring, Governor	1
85	33891	Housing, Blower	1
86	650497	Screw, Flex Pan Hd.	2
87	650737	Screw, Hex Washer Hd. Taptite	2
87A	27793	Clip, Conduit	1
87B	28942	Screw, Slotted Hex Hd. Sems	1
87C	34099	Bracket	1
87D	27070	Washer	1
87E	650738	Screw, Phil. Hex Hd. Self-Tap	1
88	*30081	Gasket, Exhaust	1
89	33893A	Tube, Oil Filler	1
90	33894A	Dipstick, Oil (Incl. Ref. #91)	1
91	33590	"O" Ring	1
92	33895	Body, Air Cleaner	1
93	33896	Filter, Air	1
94	33897	Cover, Air Cleaner	1
95	650762	Screw, Fil. Hd. Mach. Sems	2
96	650784	Screw, Hex Hd. W/Flatwasher Thread Forming	1
97	*33051	Gasket, Air Cleaner	1
98	33904	Tank, Fuel	1
99	28763	Screw, Hex Washer Hd. Thread Forming	2
100	610793A	Magneto (The complete magneto is not available as an assembly. The magneto number is shown for reference purposes only. Order component parts individually, as shown in parts list.)	1
101	631784A	Carburetor (Incl. Ref. #71)	1
102	590519	Starter, Side Mount	1
103	33906	Gasket Set (Incl. Items Marked*)	1

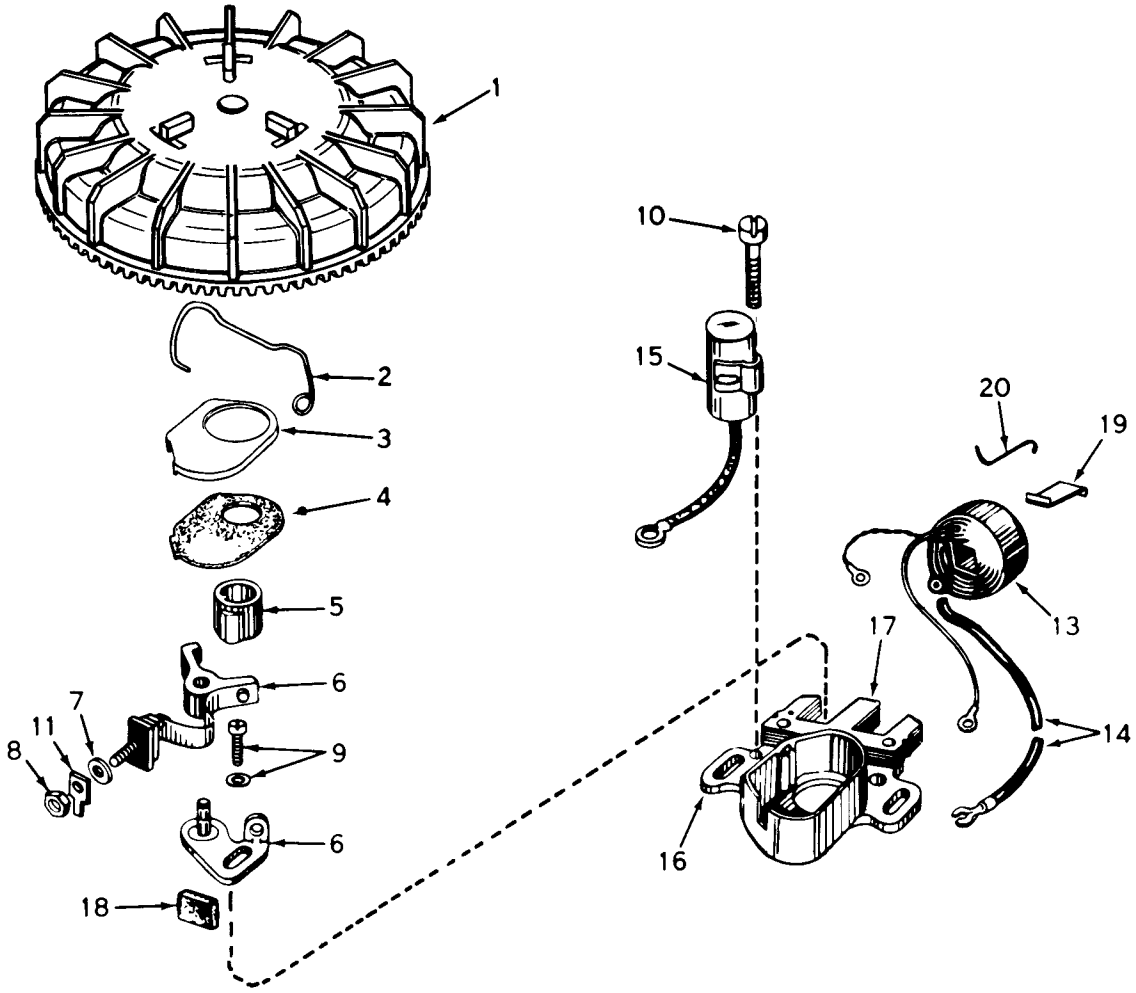

MAGNETO NO. 610793A

Ref. No.	Part No.	Description	No. Used
1	610782A	Flywheel (Incl. Ref. #3 & 4)	1
2	30551	Spring, Breaker Box Dust Cover	1
3	610947	Cover, Breaker Box Dust	1
4	610948	Gasket, Dust Cover	1
5	30552	Cam, Breaker	1
6	30547A	Breaker Assembly	1
7	610385	Washer, Terminal	1
8	610408	Nut, Terminal	1
9	29181	Screw & Washer Assembly Breaker	1
10	610593	Screw, Condenser Fastening	1

Ref. No.	Part No.	Description	No. Used
11	33356	Tab, Ground Terminal	1
13	30560A	Coil Assembly (Incl. Ref. #14)	1
14	30554	Wire, Ignition Lead	1
15	30548A	Condenser	1
16	30545	Core & Plate Group	1
17	30561B	Stator Assembly (Incl. Ref. #2, 3, 4, 6 thru 16, 18, 19 & 20)	1
18	30549	Felt, Cam Wiper	1
19	29629	Spring, Coil Wedge	1
20	31311	Clip, Coil Locking	1

*The complete magneto is not available as an assembly. The magneto number is shown for reference purposes only. Order component parts individually, as shown in parts list.

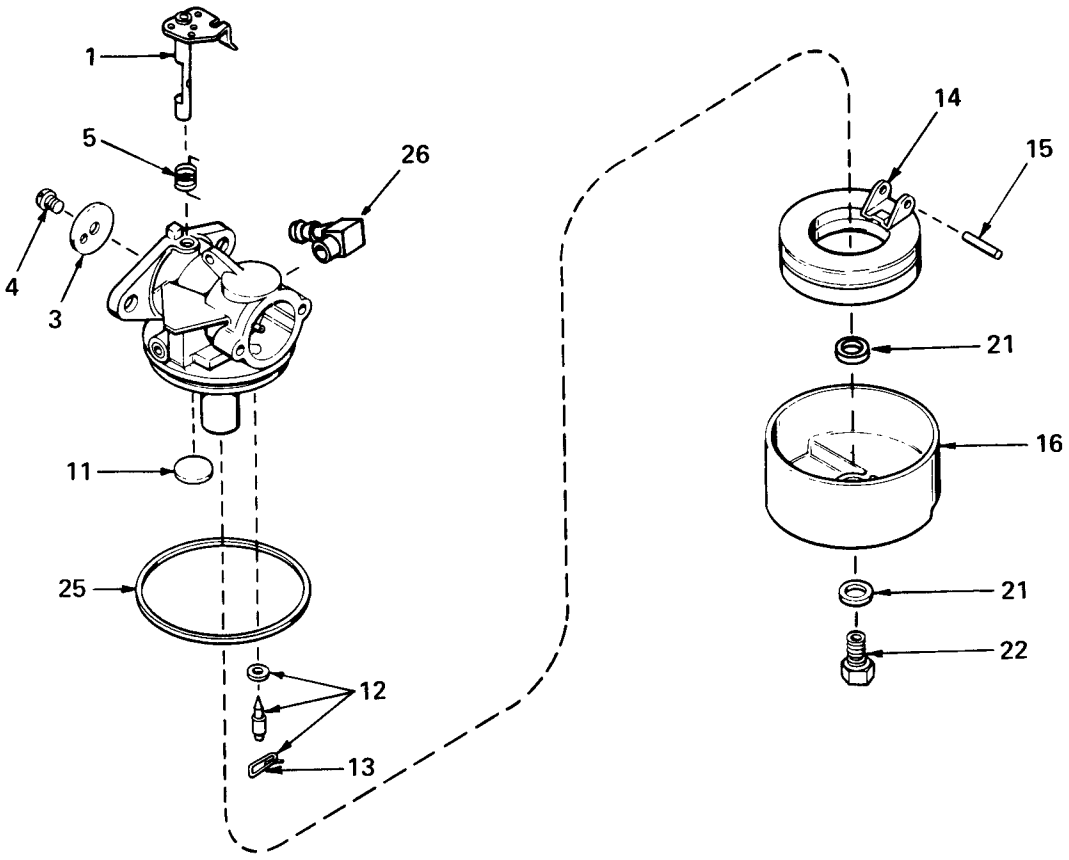

CARBURETOR NO. 631784A

Ref. No.	Part No.	Description	No. Used
1	631615	Shaft & Lever Assy., Throttle	1
3	631616	Shutter, Throttle	1
4	650506	Screw	1
5	630731	Spring, Return	1
11	631027	Plug, Welch	1
12	631021	Inlet Needle, Seat & Clip Assy. (Incl. No. 13)	1

Ref. No.	Part No.	Description	No. Used
13	631022	Clip, Inlet Needle	1
14	631023	Float, Carburetor	1
15	631024	Shaft, Float	1
16	631700	Bowl, Float	1
21	631334	Gasket, Bowl-to-body	1
22	631935	Nut, Float Bowl	1
25	631028	Gasket, Bowl-to-body	1
26	631807	Fitting, Fuel Inlet	1

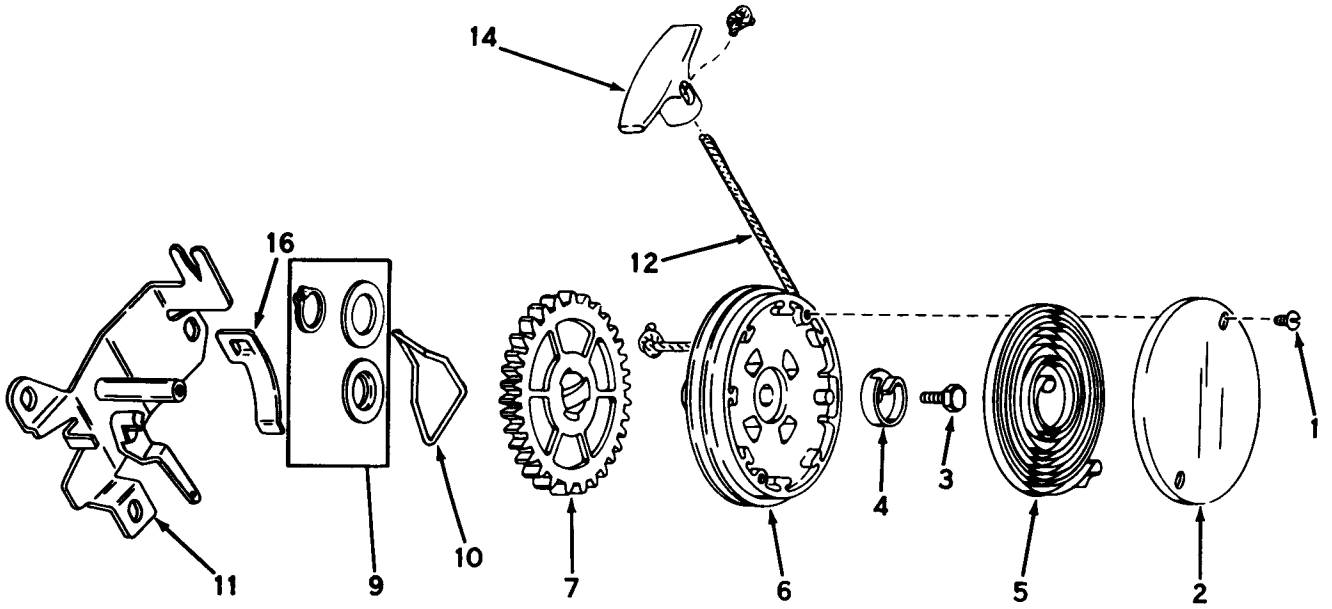

REWIND STARTER NO. 590519

Ref. No.	Part No.	Description	No. Used
1	590477	Screw, Cover	2
2	590431	Cover, Spring	1
3	590472	Screw, Hex Washer Hd. Taptite Left Hand Thread	1
4	590432	Hub, Spring	1
5	590433	Spring, Rewind	1
6	590434A	Pulley Assembly (Incl. No. 9)	1
7	590435B	Gear	1

Ref. No.	Part No.	Description	No. Used
9	590470	Kit, Thrust Washer & Snap Ring	1
10	590438	Brake	1
11	590520	Bracket Assembly, Mounting	1
12	590451A	Rope, Starter (Length 69" and 5/32" Diameter)	1
14	590452	Handle, Starter	1
16	590446	Clip, Rope	1

THE TORO PROMISE

It is Toro's policy to design and produce TORO products to provide our customers with a high level of performance and durability in normal operation. Our products, however, are produced in high volume, and it is inevitable that occasionally a unit will reach a customer with a defect in materials or workmanship which causes the unit to fall below the normal high level of TORO performance. Invariably, such a defect will be noticed in a residential product within one year after purchase. Recognizing this possibility, Toro has established a simple guarantee policy and procedure that is intended to assure customer satisfaction. This guarantee statement is as follows:

The Toro Promise

A One Year Limited Warranty

The Toro Company promises to repair any TORO Product if defective in materials or workmanship. The following time periods from the date of purchase apply:

Residential Product . . . . . 1 Year
Residential Products Used Commercially . . . 45 Days

The costs of parts and labor are included, but the customer pays the transportation costs. Just return any residential product to an Authorized TORO Service Dealer or TORO Distributor.

Should you feel your TORO is defective and wish to rely on The Toro Promise, the following procedure is recommended:

1. Contact any Authorized TORO Service Dealer, TORO Master Service Dealer, or TORO Distributor (the Yellow Pages of your telephone directory is a good reference source).
2. He will either instruct you to return the product to him or recommend another Authorized TORO Service outlet which might be more convenient.
3. Bring the product along with your original sales slip, or other evidence of purchase date, to the service dealer.
4. The servicing dealer will inspect the unit, advise you whether the product is defective and, if so, make all repairs necessary to correct the defect without extra charge to you.

If for any reason you are dissatisfied with the dealer's analysis of the defect or the service performed, you may contact us.

Write:

TORO Customer Service Department
8111 Lyndale Avenue South
Minneapolis, Minnesota 55420

The above remedy of product defects through repair by an Authorized TORO Service Dealer is the purchaser's sole remedy for any defect.

THERE IS NO OTHER EXPRESS WARRANTY. ALL IMPLIED WARRANTIES OF MERCHANTABILITY AND FITNESS FOR USE ARE LIMITED TO THE DURATION OF THE EXPRESS WARRANTY.

Some states do not allow limitation on how long implied warranty lasts, so the above limitation may not apply to you.

This warranty applies only to parts or components which are defective and does not cover repairs necessary due to normal wear, misuse, accidents, or lack of proper maintenance. Regular, routine maintenance of the unit to keep it in proper operating condition is the responsibility of the owner.

All warranty repairs reimbursable under The Toro Promise must be performed by an Authorized TORO Service Dealer using Toro approvaed replacement parts.

Repairs or attempted repairs by anyone other than an Authorized TORO Service Account are not reimbursable under The Toro Promise. In addition, these unauthorized repair attempts may result in additional malfunctions, the correction of which is not covered by warranty.

The Toro Company is not liable for indirect, incidental or consequential damages in connection with the use of the product including any cost or expense of providing substitute equipment or service during periods of malfunction or non-use.

Some states do not allow the exclusion of incidental or consequential damages, so the above exclusion may not apply to you.

This warranty gives you specific legal rights, and you may also have other rights which vary from state to state.

PRODUCT CHANGES

In an effort to make improvements available to TORO owners as quickly as possible, minor changes are incorporated into Toro's products from time to time that do not become immediately shown in the Parts Catalog. If such a change apparently has been made in your unit, which is not reflected in your manual, see your TORO Distributor or his Authorized TORO Service Dealer for information and part numbers.

IDENTIFICATION AND ORDERING

Model and Serial Numbers

The Mower has two identification numbers: a model number and a serial number. The two numbers are stamped on a decal which is located on left side of the mower housing. In any correspondence concerning the mower, supply model and serial numbers to assure that correct information and replacement parts are obtained.

To order replacement parts from an Authorized TORO Service Dealer, supply the following information.

1. Model and serial numbers of the mower.
2. Part number, description, and quantity of part(s) desired.

NOTE: Do not order by reference number if a parts catalog is being used; use the PART NUMBER.

Keep Your TORO All Toro Genuine TORO PARTS & ACCESSORIES ***Insist on Genuine Toro Parts***

MAINTENANCE RECORD

Date	Hours Used	Oil Change	Air Cleaner Service	Lubrication	Winter Storage	Spring Service	Spark Plug Gap

MAINTENANCE RECORD

Date	Hours Used	Oil Change	Air Cleaner Service	Lubrication	Winter Storage	Spring Service	Spark Plug Gap

MAINTENANCE RECORD

Date	Hours Used	Oil Change	Air Cleaner Service	Lubrication	Winter Storage	Spring Service	Spark Plug Gap

Litho in U.S.A.