Form No. 3326-544

Variable Traction Control Kit

Greensmaster® 3050/3100

Model No. 04422

Installation Instructions

Loose Parts

Description	Qty.	Use
Flow control valve	1	Install beneath the left valve cover.
Capscrew, 1/4 x 2-1/4 in. Locknut, 1/4 in.	2 2	Securing the flow control valve to the cover
Straight fitting	1	Install in the “CF” valve port.
Adjustable elbow, 90°	2	Install in the “EX” and “IN” valve ports.
Swivel run tee	1	Install in the return manifold.
Hydraulic hose—return (Part No. 105-3829)	1	Connect to the “EX” valve port and tee fitting in the return manifold.
Hydraulic hose—flow control (Part No. 68-5820)	1	Connect to the “CF” valve port and main valve.
Hydraulic hose—pressure (Part No. 83-2270)	1	Connect to the “IN” valve port and pump outlet port.
Cable Tie	4	Ties the hoses together
Traction control decal	1	Install on the left valve cover.
Parts Catalog Installation Instructions	1 1	

Removing the Valve Covers

1. Disconnect the battery ground cable from the battery to prevent electrical damage.
2. Remove the screws securing the left valve cover to the frame.
3. Remove the 2 screws and nuts securing the Toro logo plate and remove the plate.
4. Locate the relay attached to the frame beneath the control panel. Rotate it 90° counterclockwise to allow clearance for the return hose (Fig. 1).
5. Remove the screws securing the right cover to the frame. Lift the right cover off.
6. Tip the seat up and secure it to the steering column to prevent it from falling.

Installing the Variable Speed Valve

Warning

Hydraulic fluid escaping under pressure can penetrate skin and cause injury.

- **Make sure all hydraulic fluid hoses and lines are in good condition and all hydraulic connections and fittings are tight before applying pressure to the hydraulic system.**
- **Keep your body and hands away from pin hole leaks or nozzles that eject high pressure hydraulic fluid.**
- **Use cardboard or paper to find hydraulic leaks.**
- **Safely relieve all pressure in the hydraulic system before performing any work on the hydraulic system.**
- **Get immediate medical help if fluid is injected into skin.**

© 2001 by The Toro Company
8111 Lyndale Avenue South
Bloomington, MN 55420-1196

All Rights Reserved
Printed in the USA

Note: Oil the o-rings before assembly. Be careful not to displace the o-rings when connecting and tightening the connections. Do not overtighten.

1. Locate the “CF” port and install a straight fitting (Fig. 1).
2. Install a 90° fitting into the “IN” port of the valve. Orient the fitting so that it is parallel to the side of the control valve (Fig. 1).
3. Locate the “EX” port and install a 90° fitting (Fig. 1). Orient the fitting as shown in Figure 1.

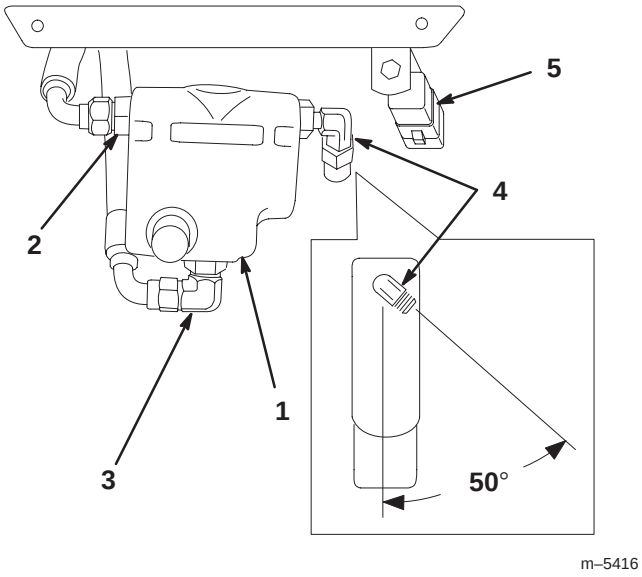

m–5416

Figure 1

1. Control valve
2. Straight fitting (“CF” port)
3. 90° fitting (“IN” port)
4. 90° fitting (“EX” port)
5. Relay

4. To ease access and keep oil spills off of the reel, detach the center cutting unit motor and store it in the support tube; detach the center cutting unit ball joints and slide the cutting unit out from under the machine. Refer to the Cutting Unit Operator’s Manual for more detailed removal instructions.
5. Drain the oil from the hydraulic reservoir; refer to the traction unit Operator’s Manual for draining instructions.
6. To avoid system contamination, clean the hydraulic connections. Place a drain pan under the machine to catch any remaining oil in the lines. Install caplugs on the hose ends and the fittings when disassembling.
7. Disconnect the hoses to the fitting on the top of the main control valve shown in Figure 2. Back out the fitting 1 revolution to allow clearance for the hose (Fig. 2).
8. Disconnect the traction pressure hose between the pump and main control valve at both ends and discard the hose. Rotate the 45° fitting on the main control valve 90° clockwise (Fig. 2).
9. Connect the 90° end of the hydraulic pressure hose (Part No. 83-2270) to the “IN” port of the flow control valve. Route the hose around the front of the oil filter and connect the opposite end of the hose to the pump outlet port (Fig. 2).
10. Connect the flow control hose (Part No. 68-5820) to the “CF” port of the flow control valve. Route the hose around the front of the oil filter and connect the opposite end of the hose to the 45° fitting in the main control valve (Fig. 2).
11. On the right end of the main control valve, disconnect the return hose for the No. 1 (center) cutting unit. Install the tee fitting onto the return manifold and connect the No. 1 cutting unit return hose to the tee fitting (Fig. 3).
12. Connect the hydraulic return hose (Part No. 105-3829) to the “EX” port on the flow control valve. Connect the opposite end of the hose to the tee fitting in the return manifold (Fig. 2 and 3).
13. Ensure that all hoses are free of kinks and routed to avoid interference with the seat and other components (Fig. 2).
14. Using the 4 cable ties, secure the hoses at the locations shown in Figure 4.
15. Reconnect the hoses that were disconnected in step 7. Ensure that all other connections are tight.

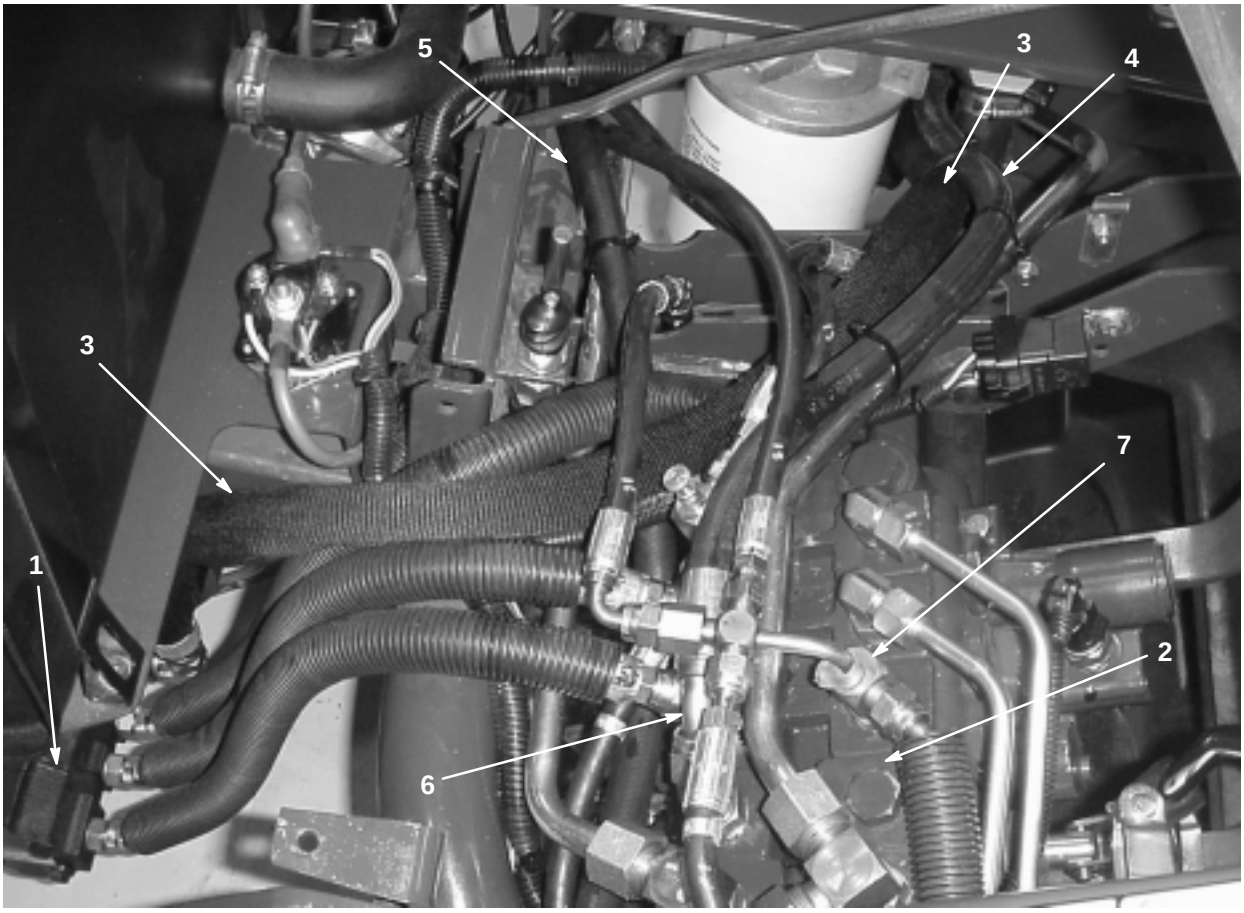

Figure 2

1. Hydraulic pump
2. Control valve
3. Hydraulic pressure hose (83-2270)
4. Flow control hose (68-5820)
5. Hydraulic return hose (105-3829)
6. 45° fitting
7. Disconnect hoses and back out fitting 1 revolution.

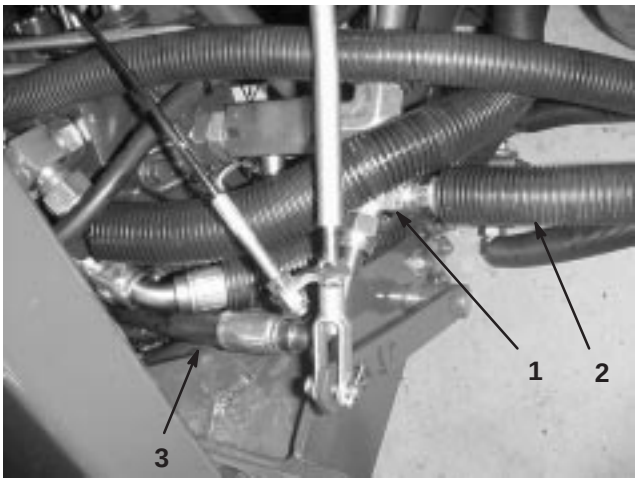

Figure 3

1. Tee fitting
2. Cutting unit return hose
3. Hydraulic return hose (105-3829)

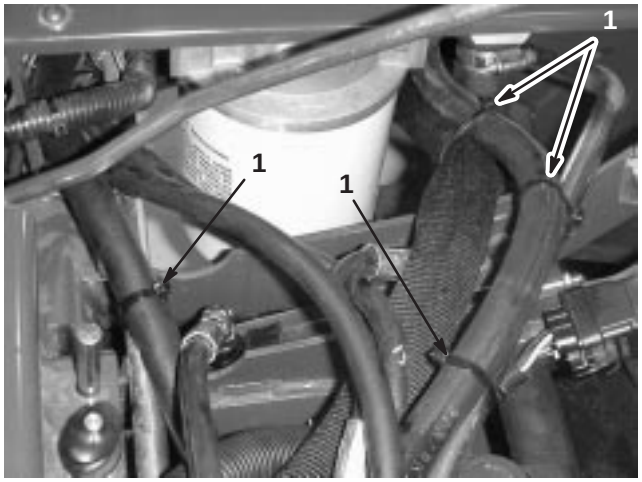

Figure 4

1. Cable ties

Assembling the Valve Covers

1. Install the right cover.
2. Using 2 capscrews and locknuts, attach the variable traction speed valve to the left valve cover and secure the valve cover to the frame (Fig. 5).

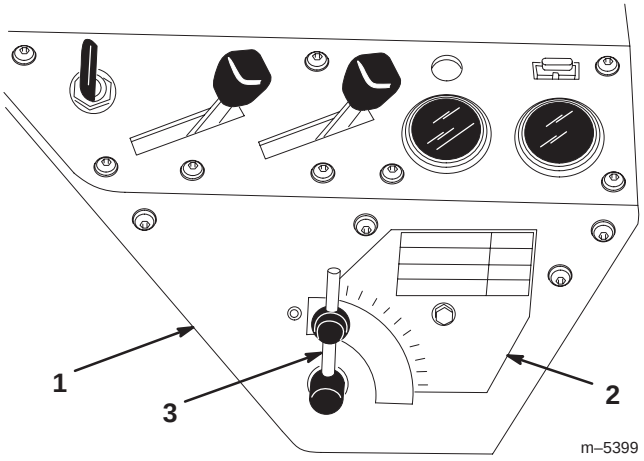

Figure 5

1. Left valve cover
2. Selection plate decal
3. Variable traction valve handle

3. Affix the selection plate decal to the valve cover and attach the handle to the valve (Fig. 5). Lower the seat.
4. Install the center cutting unit, refill the hydraulic reservoir, and check the operation of the alarm system; refer to the traction unit Operator's Manual for hydraulic oil specifications, filling procedure, and alarm system checks.
5. Connect the battery ground cable, start the engine, and check for leaks. Repair as necessary.
6. Check the operation of the variable traction speed kit. Determine the desired ground speed. After the desired ground speed has been determined, lock the handle by rotating the knob clockwise.