FORM NO. 3319-318GB Rev A

TORO®

MODEL 04351—80001 AND UP

OPERATOR'S MANUAL

GREENSMASTER® 3050

To understand this product, and for safety and optimum performance, read this manual before starting operation. Pay special attention to SAFETY INSTRUCTIONS highlighted by this symbol.



© The Toro Company—1998

This operator's manual has instructions on safety, operation, and maintenance.

This manual emphasizes safety, mechanical and general product information. DANGER, WARNING and CAUTION identify safety messages. Whenever the triangular safety alert symbol appears, understand the safety message that follows. “IMPORTANT” highlights special mechanical information and “NOTE” emphasizes general product information worthy of special attention.

IDENTIFICATION AND ORDERING

MODEL AND SERIAL NUMBER

The model and serial number for the traction unit is on a plate that is mounted on the left front frame member. The model and serial number for the cutting unit is on a plate that is mounted on the top front of the center cutting unit. Use model and serial number in all correspondence and when ordering parts.

To order replacement parts from an authorized TORO Distributor, supply the following information:

1. Model and serial numbers of the machine.

2. Part number, description and quantity of parts desired.

NOTE: Do not order by reference number if a parts catalog is being used; use the part number.

Table of Contents

	Page
Safety	3
Specifications	9
Before Operating	10
Controls	13
First-Time Operation	15
Operating	19
Maintenance	21

Safety

Training

1. Read the instructions carefully. Be familiar with the controls and the proper use of the equipment.

2. Never allow children or people unfamiliar with these instructions to use the lawn mower. Local regulations may restrict the age of the operator.

3. Never mow while people, especially children, or pets are nearby.

4. Keep in mind that the operator or user is responsible for accidents or hazards occurring to other people or their property.

5. Do not carry passengers.

6. All drivers should seek and obtain professional and practical instruction. Such instruction should emphasize:

    - the need for care and concentration when working with ride-on machines;
    - control of a ride-on machine sliding on a slope will not be regained by the application of the brake. The main reasons for loss of control are:
        - insufficient wheel grip;
        - being driven too fast;
        - inadequate braking;
        - the type of machine is unsuitable for its task;
        - lack of awareness of the effects of ground conditions, especially slopes;
        - incorrect hitching and load distribution.

Preparation

1. While mowing, always wear substantial footwear and long trousers. Do not operate the equipment when barefoot or wearing open sandals.

2. Thoroughly inspect the area where the equipment is to be used and remove all objects which may be thrown by the machine.

3. **WARNING—Petrol is highly flammable.**

    - Store fuel in containers specifically designed for this purpose.
    - Refuel outdoors only and do not smoke while refueling.
    - Add fuel before starting the engine. Never remove the cap of the fuel tank or add petrol while the engine is running or when the engine is hot.
    - If petrol is spilled, do not attempt to start the engine but move the machine away from the are of spillage and avoid creating any source of ignition until petrol vapors have dissipated.
    - Replace all fuel tanks and container caps securely.

4. Replace faulty silencers.

Operation

1. Do not operate the engine in a confined space where dangerous carbon monoxide fumes can collect.

2. Mow only in daylight or in good artificial light.

3. Before attempting to start the engine, disengage all blade attachment clutches and shift into neutral.

4. Do not use on slopes of more than:

    - Never mow side hills over 5°
    - Never mow uphill over 10°
    - Never mow downhill over 15°

5. Remember there is no such thing as a “safe” slope. Travel on grass slopes requires particular care. To guard against overturning:

    - do not stop or start suddenly when going up or downhill;
    - engage the clutch slowly, and always keep the machine in gear, especially when travailing downhill;
    - machine speeds should be kept low on slopes and during tight turns;

- stay alert for bumps and hollows and other hidden hazards;
- never mow across the face of the slope, unless the lawn mower is designed for this purpose.

6. Use care when pulling loads or using heavy equipment.

- Use only approved drawbar hitch points.
- Limit loads to those you can safely control.
- Do not turn sharply. Use care when reversing.
- Use counterweight(s) or wheel weights when suggested in the instruction handbook.

7. Watch out for traffic when crossing or near roadways.

8. Stop the blades rotating before crossing surfaces other than grass.

9. When using any attachments, never direct discharge of material toward bystanders nor allow anyone near the machine while in operation .

10. Never operate the lawn mower with defective guards, shields or without safety protective devices in place.

11. Do not change the engine governor settings or overspeed the engine. Operating the engine at excessive speeds may increase the hazard of personal injury.

12. Before leaving the operator's position:

- disengage the power take-off and lower the attachments;
- change into neutral and set the parking brake;
- stop the engine and remove the key.

13. Disengage the drive to attachments when transporting or not in use.

14. Stop the engine and disengage the drive to the attachment

- before refueling;
- before removing the grass catcher;
- before making height adjustments unless the adjustment can be made from the operator's position.
- before clearing blockages;
- before checking, cleaning or working on the lawnmower;
- after striking a foreign object. Inspect the lawnmower for damage and make repairs before restarting and operating the equipment.

15. Reduce the throttle setting during engine runout and, if the engine is provided with a shutoff valve, turn the fuel off at the conclusion of mowing.

Maintenance and Storage

1. Keep all nuts, bolts and screws tight to be sure the equipment is in safe working condition.

2. Never store the equipment with petrol in the tank inside a building where fumes may reach an open flame or spark.

3. Allow the engine to cool before storing in any enclosure.

4. To reduce the fire hazard, keep the engine, silencer, battery compartment and petrol storage area free of grass, leaves, or excessive grease.

5. Check the grass catcher frequently for wear or deterioration.

6. Replace worn or damaged parts for safety.

7. If the fuel tank has to be drained, this should be done outdoors.

8. Be careful during adjustment of the machine to prevent entrapment of the fingers between moving blades and fixed parts of the machine.

9. On multi-bladed machines, take care as rotating one blade can cause other blades to rotate.

10. When the machine is to be parked, stored or left unattended, lower the cutting means unless a positive mechanical lock is used.

Sound & Vibration Levels

Sound Levels

This unit has an equivalent continuous A-weighted sound pressure at the operator ear of: 86 dB(A), based on measurements of identical machines per 84/538/EEC.

This unit has a sound power level of 100 dB(A)/1pW, based on measurements of identical machines per procedures outlined in Directive 79/113/EEC and amendments.

Vibration Levels

This unit has a vibration level of 2.5 m/s^2 at the posterior, based on measurements of identical machines per ISO 2631 procedures.

This unit does not exceed a vibration level of 0.5 m/s^2 at the posterior based on measurements of identical machines per ISO 2631 procedures.

OTOTYPE

Symbol Glossary

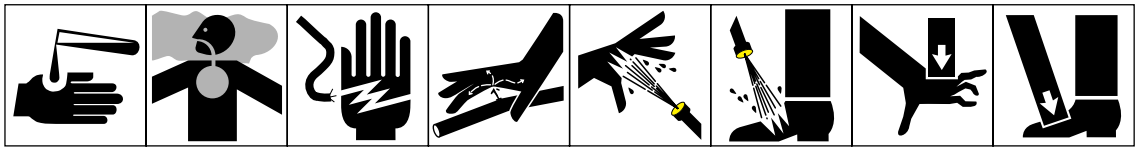

Caustic liquids, chemical burns to fingers or hand | Poisonous fumes or toxic gases, asphyxiation | Electrical shock, electrocution | High pressure fluid, injection into body | High pressure spray, erosion of flesh | High pressure spray, erosion of flesh | Crushing of fingers or hand, force applied from above | Crushing of toes or foot, force applied from above

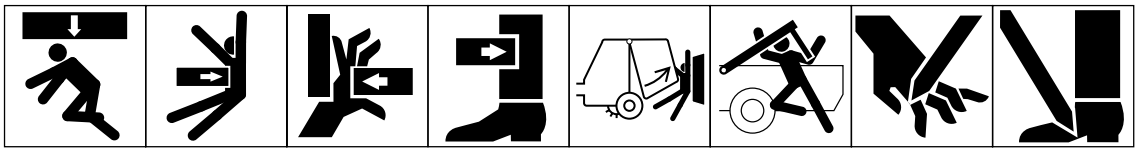

Crushing of whole body, applied from above | Crushing of torso, force applied from side | Crushing of fingers or hand/, force applied from side | Crushing of leg, force applied from side | Crushing of whole body | Crushing of head, torso and arms | Cutting of fingers or hand | Cutting of foot

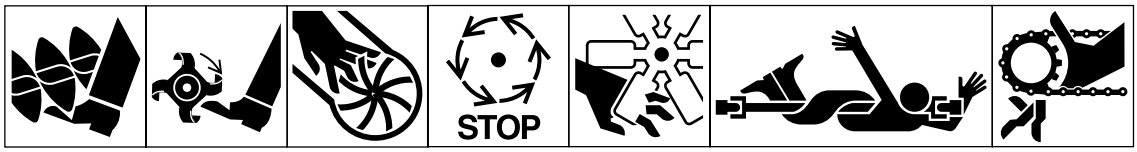

Cutting or entanglement of foot, rotating auger | Severing of foot, rotating knives | Severing of fingers or hand, impeller blade | Wait until all machine components have completely stopped before touching them | Severing of fingers or hand, engine fan | Whole body entanglement, implement input drive line | Fingers or hand entanglement, chain drive

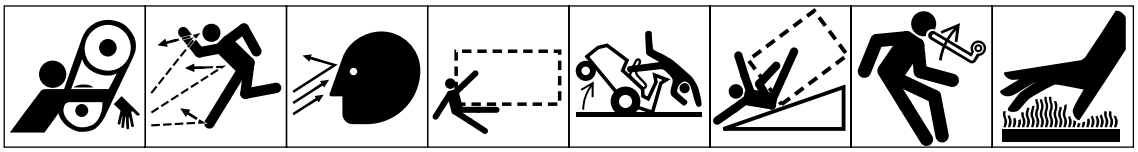

Hand & arm entanglement, belt drive | Thrown or flying objects, whole body exposure | Thrown or flying objects, face exposure | Runover/backover, (relevant machine to appear in dashed box) | Machine tipping, riding mower | Machine rollover, ROPS (relevant machine to appear in dashed box) | Stored energy hazard, kickback or upward motion | Hot surfaces, burns to fingers or hands

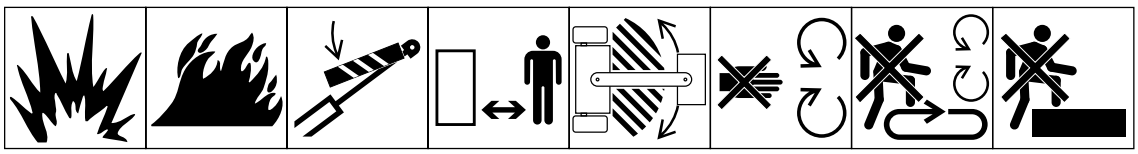

Explosion | Fire or open flame | Secure lifting cylinder with locking device before getting in hazardous area | Stay a safe distance from the machine | Stay clear of articulation area while engine is running | Do not open or remove safety shields while engine is running | Do not step on loading platform if PTO is connected to tractor & engine is running | Do not step

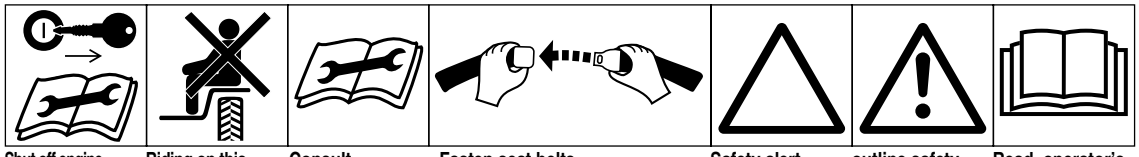

Shut off engine & remove key before performing maintenance or repair work | Riding on this machine is allowed only on a passenger seat & only if the driver's view is not hindered | Consult technical manual for proper service procedures | Fasten seat belts | Safety alert triangle | outline safety alert symbol | Read operator's manual

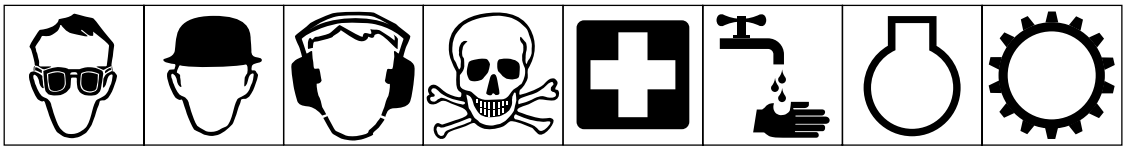

Eye protection must be worn | Head protection must be worn | Hearing protection must be worn | Caution, toxic risk | First aid | Flush with water | Engine | Transmission

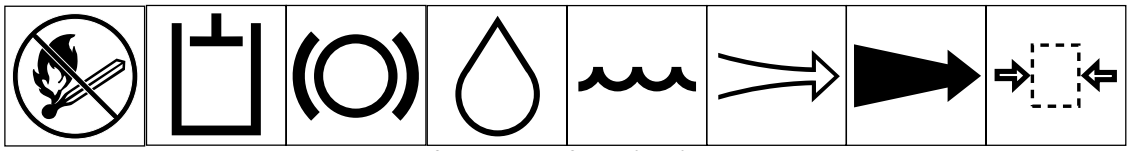

Fire, open light & smoking prohibited | Hydraulic system | Brake system | Oil | Coolant (water) | Intake air | Exhaust gas | Pressure

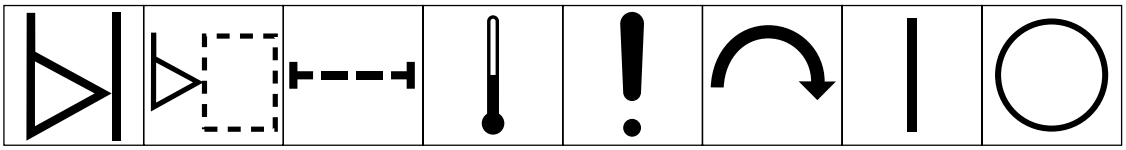

Level indicator | Liquid level | Filter | Temperature | Failure/ Malfunction | Start switch/ mechanism | On/start | Off/stop

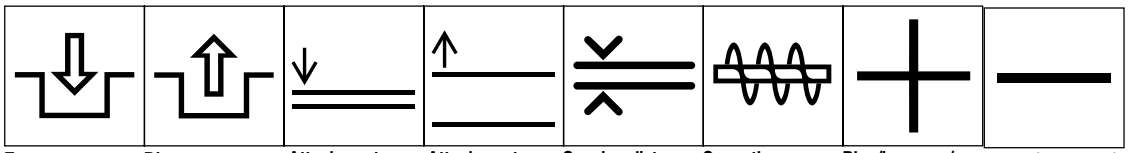

Engage | Disengage | Attachment lower | Attachment raise | Spacing distance | Snow thrower, collector auger | Plus/increase/ positive polarity | Minus/decrease/ negative polarity

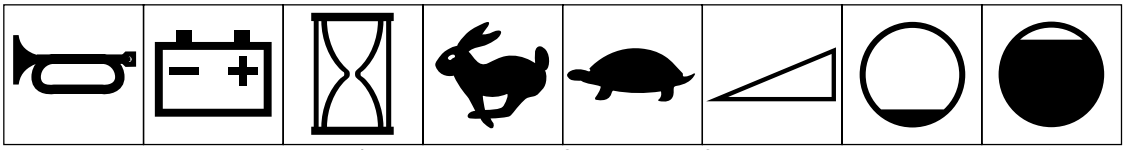

Horn | Battery charging condition | Hourmeter/elapsed operating hours | Fast | Slow | Continuous variable, linear | Volume empty | Volume full

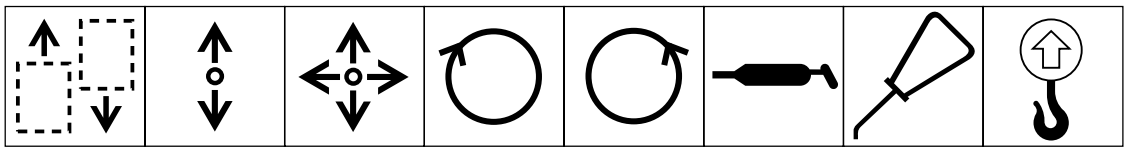

Machine travel direction, forward/rearward | Control lever operating direction, dual direction | Control lever operating direction, multiple direction | Clockwise rotation | Counter-clock-wise rotation | Grease lubrication point | Oil lubrication point | Lift point

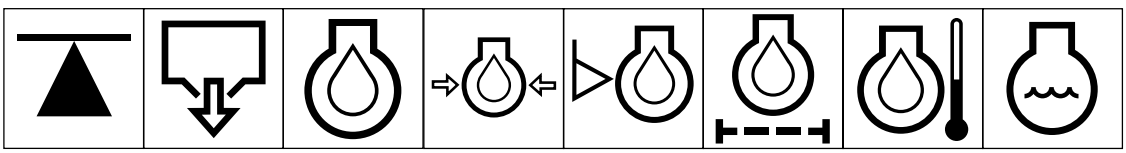

Jack or support point | Draining/ emptying | Engine lubricat-ing oil | Engine lubricating oil pressure | Engine lubricating oil level | Engine lubricating oil filter | Engine lubricating oil temperature | Engine coolant

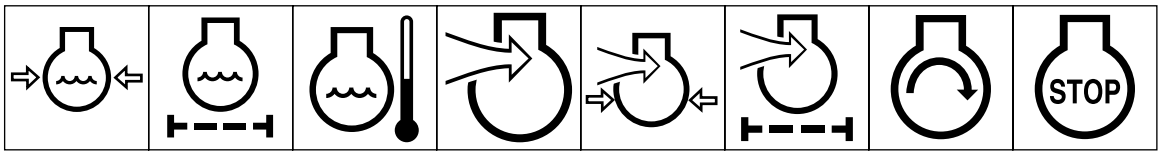

Engine coolant pressure | Engine coolant f ilter | Engine lubricating oil pressure | Engine intake/ combustion air | Engine intake/ combustion air pressure | Engine intake/ air filter | Engine start | Engine stop

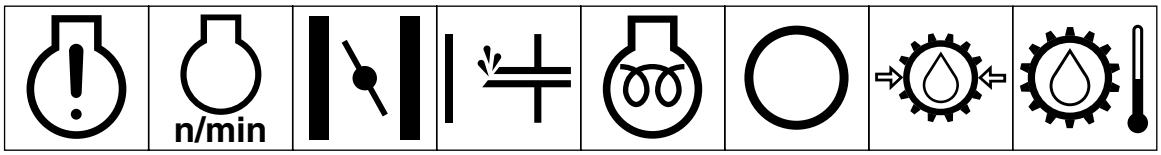

Engine failure/ malfunction | Engine rotational speed/frequency | Choke | Primer (start aid) | Electrical preheat (low temperature start aid) | Transmission oil | Transmission oil pressure | Transmission oil temperature

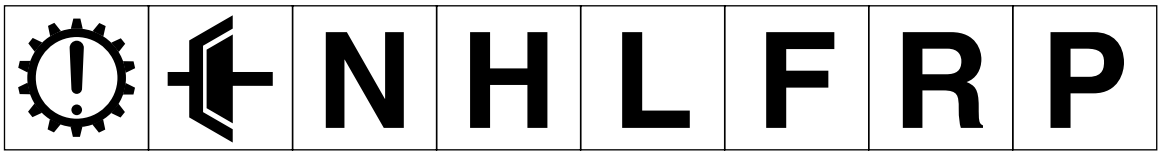

Transmission failure/malfunction | Clutch | Neutral | High | Low | Forward | Reverse | Park

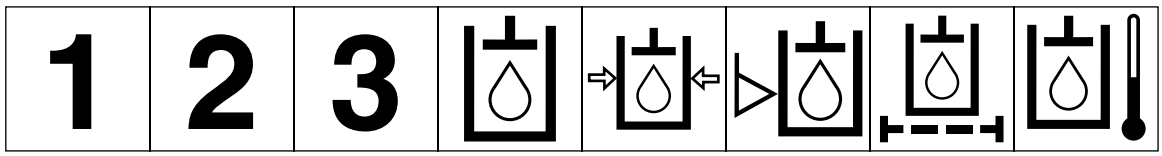

First gear | Second gear | Third gear (other #'s may be used until the maximum # of for- ward gears is reached.) | Hydraulic oil | Hydraulic oil pressure | Hydraulic oil level | Hydraulic oil filter | Hydraulic oil temperature

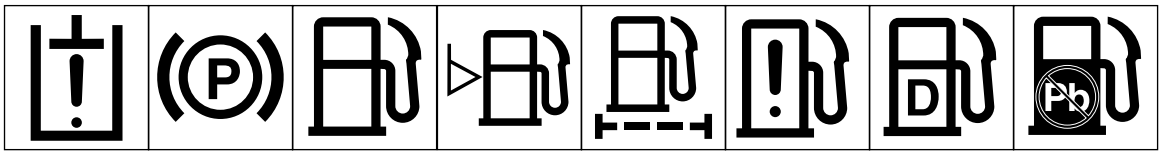

Hydraulic oil failure/malfunction | Parking brake | Fuel | Fuel level | Fuel filter | Fuel system failure/malfunction | Diesel fuel | Unleaded fuel

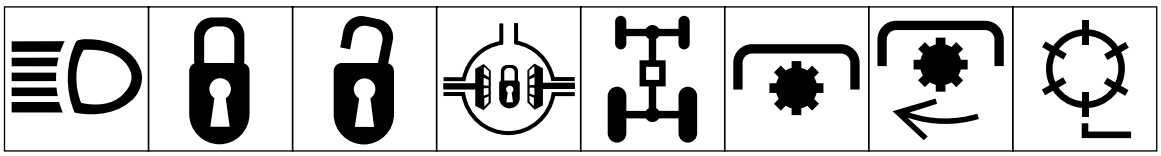

Headlights | Lock | Unlock | Differential lock | 4-Wheel drive | Power Take-Off | Power Take-Off, rotational speed | Reel cutting element

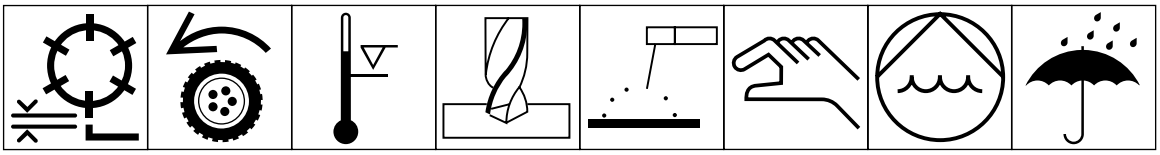

Reel cutting element, height adjustment | Traction | Above working temperature range | Drilling | Manual metal arc welding | Manual | 0356 Water pump | 0626 Keep dry



0430 weight | Do not dispose in the garbage | CE logo

Specifications

Power: 4-cycle gasoline engine, electric start, with output of 11.9 kW @3,600 rpm. Maximum no-load governed engine speed is 2,850 rpm.

Traction: All-hydraulic drive.

Cutting Units: All-hydraulic drive.

Hydraulic Valve: Five spool sections: the first 3 spool sections control the lowering, mowing and lift functions of the cutting units. The spools moved out provide lowering and MOW operation, moved in they provide LIFT operation. The number 4 spool section controls the traction functions, N (Neutral), 1 (Mow), and 2 (transport). The number 5 spool section controls forward and reverse traction.

Tire Pressure :

- 55–83 kPa—front
- 55–103 kPa—rear

Brakes: 15 cm drum-type mechanical with rack and pawl lock for parking.

Hydraulic Filter: 10-micron, cartridge type.

Hydraulic Oil Reservoir: 17-liter capacity with internal baffle. Type fluid: Mobil 424. Red dye is added at the factory.

Gas Tank: 28 liter capacity.

Fuel Filter: In-line type.

Fuel Pump: Vacuum pulse type.

Seat Adjustment: 17.8 cm (forward and rearward).

Wheel Bearings:

Drive Wheels: Needle provided in wheel motors.
Rear Caster Wheels: Timken tapered roller.

Electrical & Instrumentation: The engine contains a 15-amp alternator; the circuit is fused at 20 amps. Instruments include ammeter and hour meter. An accessory terminal is available at the leak detector test switch if attachment of headlights is desired.

Battery: 12-Volt, Lead Acid, 32-Amp. Hour.

General Specifications:

Width of Cut:	140 cm
Wheel Tread:	125 cm
Wheel Base:	119 cm
Overall Length:	229 cm
Overall Width:	177 cm
Overall Height:	123 cm
Net Weight (Wet):	437 kg

Speeds:

1st —6.1 kmh
2nd—11.9 kmh
Rev.—13.1 kmh

Reels: 1,975 rpm (approximately)

Clip:

0.46 cm	(11-Blade Cutting Unit)
0.64 cm	(8-Blade Cutting Unit)

Accessories:

Thatching Reels, Model No. 04416.
Individual Reel Shut-Off Kit, Model No. 28-2150
Basket Reinforcement Kit, Model No. 26-0900.
Variable Traction Speed Kit, Model No. 04422.
Backlapping kit, Part No. 92-9656.

Specifications and design subject to change without notice.

Before Operating

CHECK THE ENGINE OIL

The engine is shipped with 1.7 liter (with filter) of oil in the crankcase; however, the level of oil must be checked before and after you first start the engine.

1. Position the machine on a level surface.

2. Unscrew the dipstick and wipe it with a clean cloth. Screw the dipstick into the tube and make sure it is seated fully. Unscrew the dipstick and check the oil level. If it is low, remove the filler cap from the valve cover and add enough oil to raise the level to the FULL mark on the dipstick.

3. The engine uses any high-quality detergent oil having the American Petroleum Institute —API—service classification SC, SD, SE, SF or SG. Recommended viscosity (weight) is SAE 30.

4. Pour the oil into the opening in the valve cover until the oil level is up to the FULL mark on the dipstick. Add the oil slowly and check the level often during this process. DO NOT OVERFILL.

IMPORTANT: Check the oil level every 8 operating hours or daily. Initially change the oil and filter after the first 8 hours of operation; after that—under normal conditions—change the oil after every 50 hours and the filter after every 100 hours. However, change the oil more often when you operate the engine in extremely dusty or dirty conditions.

5. Install the dipstick firmly in place.

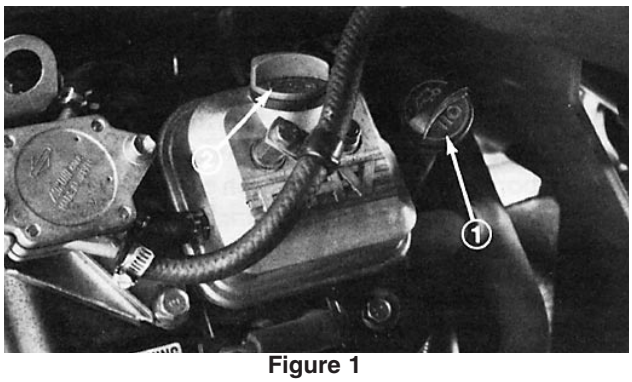

Figure 1

1. *Dipstick*
2. *Fill Cap*

FILLING THE GAS TANK

OTOTYPE

THE TORO COMPANY STRONGLY RECOMMENDS THE USE OF CLEAN, FRESH UNLEADED REGULAR GASOLINE IN TORO GASOLINE-POWERED PRODUCTS. UNLEADED GASOLINE BURNS CLEANER, EXTENDS ENGINE LIFE, AND PROMOTES GOOD STARTING BY REDUCING THE BUILD-UP OF COMBUSTION CHAMBER DEPOSITS. LEADED GASOLINE CAN BE USED IF UNLEADED IS NOT AVAILABLE.

NOTE: Never use methanol, gasoline containing methanol, gasohol containing more than 10% ethanol, gasoline additives, premium gasoline, or white gas because the engine

fuel system damage could result.

1. Fill the gasoline tank to the bottom of the filler neck. DO NOT OVERFILL. Install the cap and tighten it securely in place.

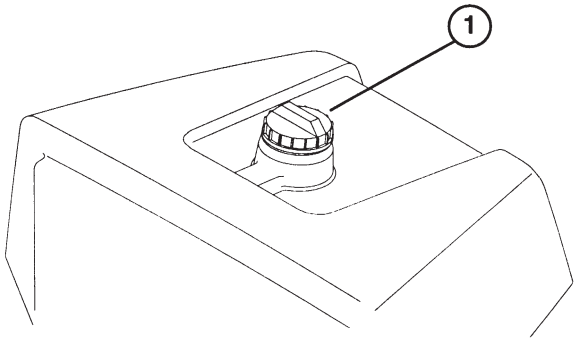

Figure 2

1. Fuel tank cap

DANGER

Because gasoline is flammable, use caution when storing or handling lt. Do not fill the fuel tank while the engine is running, or hot, or when the machine is in an enclosed area. Vapors may build up and be ignited by a spark or flame source many feet away. DO NOT SMOKE while filling the fuel tank to prevent the possibility of an explosion. Always fill the fuel tank outside and wipe up any spilled gasoline before starting the engine. Use a funnel or spout to prevent spilling gasoline before starting the engine and fill the tank to about 1 inch from the top of the tank, not the filler neck. Store gasoline in a clean safety-approved container and keep the cap in place on the container. Keep gasoline in a cool, well-ventilated place—never in an enclosed area such as a hot storage shed. To assure volatility, do not buy more than a 30-day supply of gasoline. Gasoline is a fuel for internal combustion engines; therefore, do not use it for any other purpose. Since many children like the smell of gas, keep it out of their reach because the fumes are explosive and dangerous to inhale.

CHECK THE HYDRAULIC SYSTEM

The hydraulic system is designed to operate on anti-wear hydraulic fluid. The machine's reservoir is filled at the factory with 4.5 gallons (17 l) of Mobil 424 hydraulic fluid. **Check the level of hydraulic fluid before the engine is first started and daily thereafter.**

PROTOTYPE

Group 1 Hydraulic Fluid (Recommended for ambient temperatures consistently below 100° F)

Mobil	Mobil Fluid 424
Amoc	Amoco 1000
Boron Oil	Eldoran UTH
BP Oil	BP HYD TF
Chevron	Tractor Hydraulic fluid
Conoco	Power-Tran 3
Exxon	Torque fluid
International Harvester	Hy-Tran
Kendall	Hyken 052

Phillips	HG fluid
Shell	Donax TD
Texaco	TDH
Union Oil	Hydraulic/Tractor fluid

Note: The fluids within this group are interchangeable.

Group 2 Hydraulic Fluid (Recommended for ambient temperatures consistently above 70° F)

ISO type 68 anti-wear hydraulic fluid

Mobil	DTE 26 or DTE 16
Shell	Tellus 68
Amoco	Rykon Oil 68
Arco	Duro AW S-315
Boron	Industron 53
BP Oil	Energol HLP68
Castrol	Hyspin AWS68
Chevron	Chevron EP68
Citgo	Citgo A/W68
Conoco	Super Hydraulic Oil 31
Exxon	Nuto H68
Gulf	68AW
Pennzoil	IAW Hyd Oil 68
Phillips	Magnus A 315
Standard	Industron 53
Texaco	Rando HD68
Union	Unax AW 315

Note: The fluids within this group are interchangeable.

IMPORTANT: Two groups of hydraulic fluid are specified to allow optimal operation of the machine in a wide range of temperatures. The group 1 fluids are multi-viscosity fluids, which allow operation at lower temperatures without the increased viscosity associated with straight viscosity fluids.

Using the Mobil 424 type fluids in the higher ambient temperatures may result in decreased efficiency in some of the hydraulic components compared with using the Mobil DTE 26 type fluids.

The Mobil DTE 26 type fluids are straight viscosity fluids which remain slightly more viscous at higher temperatures than the multi-viscosity fluids.

Using the Mobil DTE 26 type fluids in the lower ambient temperatures may result in harder starting, increased engine laboring while cold, sluggish or non-operating valve spools while cold and increase filter back pressure.

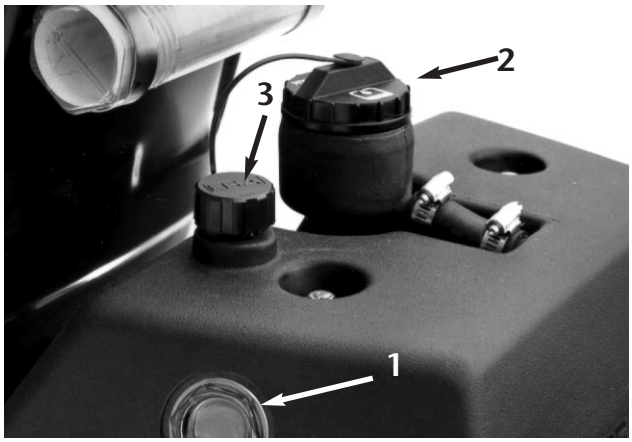

Figure 3

1. *Sight gauge*
2. *Hydraulic tank cap*
3. *Auxiliary tank breather*

PROTOTYPE

It is recommended that you select the set of conditions (either ambient temperatures above 70° F, or below 100° F), and use that type of fluid throughout the year, instead of changing fluid types several times during the year.

Group 3 Hydraulic Fluid (Biodegradable):

ISO type 32/46 anti-wear hydraulic fluid

Mobil EAL 224 H

Note: This biodegradable hydraulic fluid is not compatible with the fluids in group 1 or 2.

Note: When changing from one type of hydraulic fluid to another, be certain to remove all the old fluid from the system because some brands are not completely compatible with other brands of hydraulic fluid.

IMPORTANT: Use only hydraulic oils specified. Other fluids could cause system damage.

Note: A red dye additive for the hydraulic system fluid is available in19.8 ml bottles. One bottle is sufficient for 22 L of hydraulic fluid. Order Part No. 44-2500 from your Authorized Toro Distributor.

1. Position the machine on a level surface. Make sure the machine has cooled down so fluid is cold. Check the level of oil by viewing the sight gauge on the side of the auxiliary oil tank. If the oil level is up to the FULL mark next to the gauge, the oil level is sufficient.

2. Remove the cap from the top of the reservoir and check the fluid level. The fluid should be approximately 8 cm below the top of the fill hole.

3. If the oil level is low, slowly fill the reservoir with Mobil 424 or equivalent hydraulic oil until the level is up to the correct level. Do not mix oils. Install the cap.

   IMPORTANT: To prevent system contamination, clean the tops of hydraulic fluid containers before puncturing them. Assure the pour spout and funnel are clean.

NOTE: Make a close visual inspection of the hydraulic components. Inspect for leaks, loose fasteners, missing parts, improperly routed lines, etc. Make any corrections necessary.

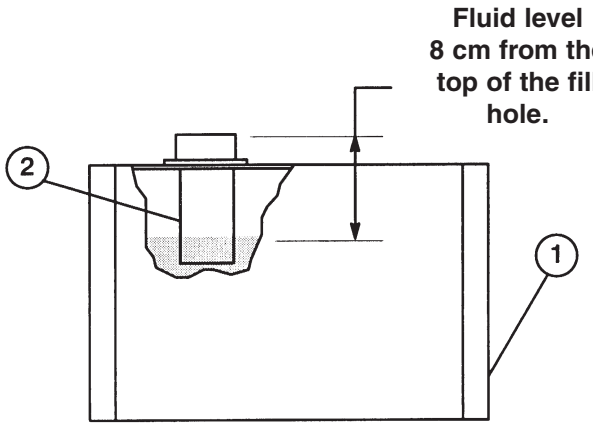

Figure 3

1. *Hydraulic reservoir*
2. *Screen*

TIRE PRESSURE

The tires are over-inflated at the factory for shipping. Reduce the tire pressure to the proper levels before starting the unit.

Vary the tire pressure for the drive wheels, depending on your turf conditions, from a minimum of 55 KPa to a maximum of 83 KPa

Vary the tire pressure for the rear wheel from a minimum of 55 KPa to a maximum of 103 KPa. Traction improves with lower tire pressure.

CHECK TORQUE OR WHEEL NUTS

WARNING

Torque the wheel nuts to 54–60 Nm after 1–4 hours of operation and again after 10 hours of operation and every 200 hours thereafter. Failure to maintain correct torque could result in personal injury.

Controls

MOW PEDAL (Fig. 4)—Depressing the mow pedal FULLY during operation lowers the cutting units and starts the reels.

BRAKE PEDAL (Fig. 4)—The brake pedal actuates an automotive drum-type mechanical brake.

LIFT PEDAL (Fig. 4)—Depressing the lift pedal during operation stops the reels from turning and lifts the cutting units. The lift pedal must be FULLY depressed until the cutting units are fully raised and have stopped rotating.

PARKING BRAKE BUTTON (Fig. 4)—Depressing the brake pedal to actuate the brake assembly, then depressing the parking brake button will keep the brakes engaged for parking. Disengage by depressing the brake pedal. Form the habit of locking the parking brake before you leave the machine.

TRACTION PEDAL (Fig. 4)—The traction pedal makes the machine move forward or backward. Depress the top of the pedal to move forward and the bottom of the pedal to move backward. Do not rest your heel on reverse when operating forward (Fig. 5).

THROTTLE CONTROL (Fig. 6)—The throttle controls the engine speed. Moving the throttle control toward FAST increases engine rpm; moving the throttle toward SLOW decreases engine rpm.

NOTE: You cannot stop the engine using the throttle control.

CHOKE (Fig. 6) —To start a cold engine, close the carburetor choke by moving the choke control forward to the CLOSED position. After the engine starts, regulate the choke to keep the engine running smoothly. As soon as possible, open the choke by pulling it rearward to OPEN. A warm engine requires little or no choking.

IGNITION SWITCH (Fig. 6)—Insert the key into the switch and turn it clockwise to the START position to start the engine. Release the key as soon as the engine starts. Turn the key counter-clockwise to OFF to stop the engine.

AMMETER (Fig. 6)—The ammeter shows the rate of battery charge and discharge.

NOTE: During normal operation there will be little or no movement of the ammeter needle.

FUSE (Fig. 6)—The 20-amp fuse is part of the electrical

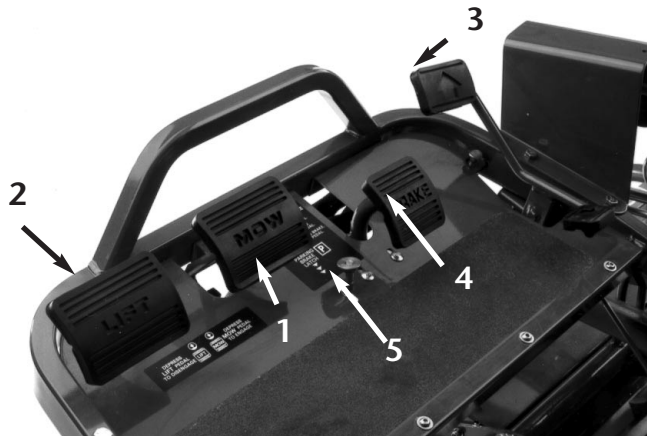

Figure 4

1. *Mow pedal*
2. *Lift pedal*
3. *Traction pedal*
4. *Brake pedal*
5. *Parking brake button*

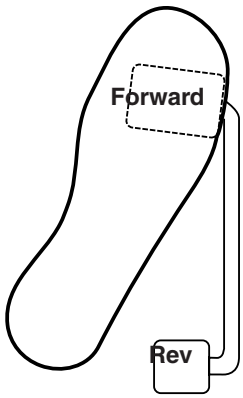

Figure 5

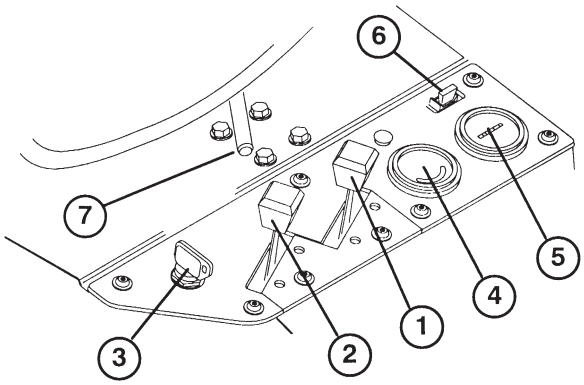

Figure 6

1. *Choke control*
2. *Throttle control*
3. *Ignition switch*
4. *Voltmeter*
5. *Hour meter*
6. *Fuse (20 amp)*
7. *Seat adjusting handle*

circuit.

HOUR METER (Fig. 6)—Shows the total hours of machine operation. The hour meter starts whenever the key switch is turned to ON.

SEAT ADJUSTING HANDLE (Fig. 6)—Located on the left side of the seat, this lever allows four inch fore-and-aft adjustment.

MOW LOCKOUT LEVER (Fig. 7)—locks the mow pedal, preventing accidental starting of the cutting units. To unlock, pull the mow lockout pin outward, rotate it clockwise and insert the end into the rear hole in the bracket.

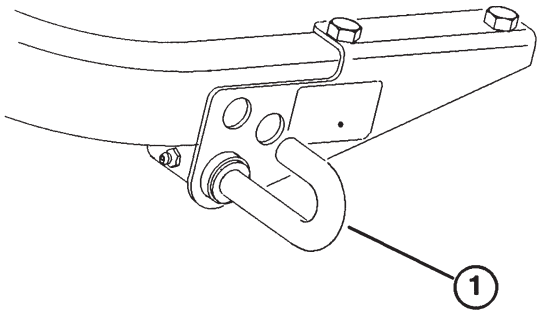

Figure 7

1. Mow lockout lever pin

SHIFT SELECTOR (Fig. 8)—Provides two traction selections, plus a NEUTRAL position. It is permissible to shift from one selection to another while the machine is in motion. No damage will result.

1. Neutral—Used for starting the engine.
2. No. 1 Position—Used for greens mowing operation.
3. No. 2 Position—Used for transport operation.

NOTE: If you operate the machine in reverse with the cutting units down, they will be pulled off the lift arms.

STEERING ARM LOCKING LEVER (Fig. 8)—Rotate the lever rearward to loosen, then raise or lower the steering arm for comfort. Then rotate the lever forward to tighten.

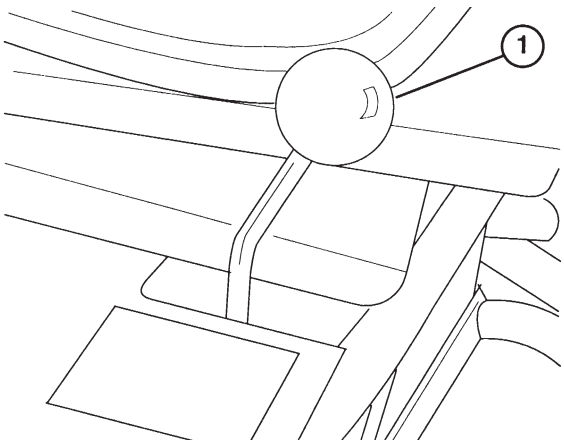

Figure 8

1. Shift selector

To adjust the locking lever:

1. Rotate the lever rearward to loosen adjustment and move the steering arm to its lowest position.
2. Loosen the lever set screw.
3. Rotate the adjusting bolt (left-hand thread) counterclockwise to tighten, or clockwise to loosen the adjustment.
4. Tighten the set screw to lock the adjustment.

First-Time Operation

BREAK-IN PERIOD

1. Refer to the Engine Manual supplied with the Greensmaster 3050 for oil change and maintenance procedures recommended during break-in.

2. Only 8 hours of mowing operation is required for the Greensmaster 3050 break-in period.

3. The first hours of operation are critical to future dependability. Monitor performance closely so that minor difficulties that could lead to major problems can be corrected. Inspect the machine often during break-in for signs of oil leakage, loose fasteners, or any other malfunction.

4. To assure optimum performance of the brake system, burnish (break-in) the brakes before use. To burnish brakes: Firmly apply brakes and drive the machine at mowing speed until the brakes are hot, as indicated by their smell. An adjustment to the brakes may be required after break-in. Refer to *Brake Adjustment.*

STARTING INSTRUCTIONS

Note: Inspect the areas beneath the mowers to make sure they are clear of debris.

1. Unlock the mow lockout lever by pulling the pin outward, rotating it clockwise and inserting the end into the rear hole in the bracket.

2. Sit on the seat, place the shift selector in NEUTRAL, and check the mow and lift pedals to make sure they are level with one another.

3. Remove your foot from the traction pedal and make sure the pedal is in neutral.

4. Move the choke lever to ON—when starting a cold engine—and the throttle lever to the half-throttle position.

5. Insert and turn the ignition key clockwise until the engine starts. After the engine starts, regulate the choke to keep the engine running smoothly. As soon as possible, open the choke by pulling it rearward to the OFF position. A warm engine requires little or no choking.

6. Check the machine out with the following procedures after the engine has started:

A. Move the throttle control to FAST and momentarily engage the reels by depressing the mow pedal (the cutting units should drop and all reels should turn).

B. Operate the lift pedal; the cutting reels should stop and the cutting units raise to full transport position.

NOTE: Stop the engine. Check the lip of each basket to be sure it doesn't contact the reel dur ing operation. Re-adjust if the basket does make contact.

C. Depress the brake pedal to keep the machine from moving and operate the traction pedal through the forward and reverse positions. Continue the above procedure for 1–2 minutes.

D. Neutralize the traction lever and the mow and lift pedals, lock the parking brake, and turn the engine off. Check for oil leaks; if oil leaks appear, check the tightness of the hydraulic fittings. If oil leaks continue to appear, contact your local TORO dealer for assistance and, if necessary, replacement parts.

IMPORTANT: The motor or wheel seals may show some trace of oil for a short period of time until the break-in period is completed.

NOTE: When the Greensmaster 3050 is new and the bearings and reels are tight, it is necessary to use the FAST throttle control position for this check. A fast throttle setting may not be required after break-in.

CHECK THE INTERLOCK SYSTEM OPERATION

The interlock system prevents the engine from cranking or starting unless the operator is on the seat, the shift selector is in NEUTRAL and the cutting units are DISENGAGED. Also, the engine will stop when the cutting units are engaged or if the shift selector is in the No. 1 or No. 2 position with operator off the seat. Do the following system checks daily to make sure the interlock system operates correctly.

CAUTION

The interlock switches are for the operator's protection, so do not disconnect them. Check switch operation daily to assure the interlock system is operating. If a switch is defective, replace it before operating. Regardless of whether the switches are operating properly, replace them every two years to assure maximum safety. Do not rely entirely on safety switches—use common sense!

1. Engage the parking brake, move the shift selector to neutral, remove your foot from the traction pedal and make sure the pedal is in neutral, and depress the lift pedal and release it. Rise off the seat and try to start the engine. The engine should not crank, which means the interlock system is operating correctly. If the engine did not crank, go to step 2. If the engine cranked, contact your local TORO dealer for assistance.

2. Sit on the seat, engage the parking brake and depress the lift pedal fully and release it. Move the shift selector to the #1 and #2 positions while trying to start the engine in each position. The engine should not crank, which means the traction switch on the valve bank is operating correctly. If the engine did not crank, go to step 3. If the engine cranked, contact your local TORO dealer for assistance.

3. Sit on the seat, engage the parking brake, depress the lift pedal and release it. Move the shift selector to Neutral and try to start the engine. The engine should start and continue to run, which means the traction switch and the mow/lift switch on valve bank are operating correctly—go to step 4. If the engine cranked but did not start, the problem is not in the interlock system. If the engine did not crank, contact your local TORO dealer for assistance.

4. Sit on the seat, engage the parking brake and move the shift selector to neutral. Depress the mow pedal and try to start the engine. The engine should not crank, which means the mow-lift switch is operating correctly. If the engine did not crank, go to step 5. If the engine cranked, ask your local TORO dealer for assistance.

5. Sit on the seat, move the shift selector to Neutral, depress the lift pedal and release it. Start the engine and drive to an open area that is free of debris and for-

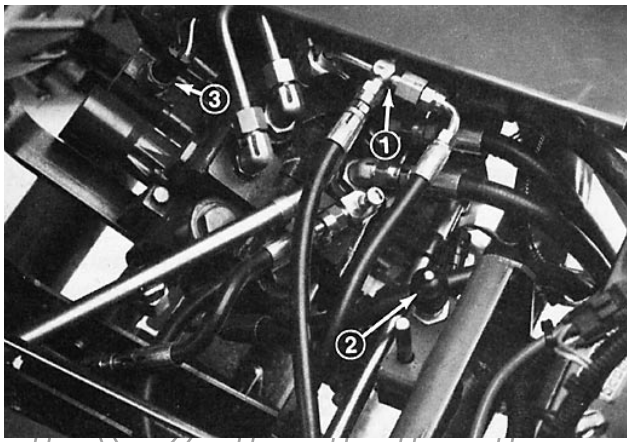

Figure 9

1. Traction switch
2. Seat switch
3. Mow/lift switch

DRAFT

eign objects. Keep all people, especially children, away from the front of the machine and out of the area of operation. Move the shift selector to Neutral, make sure the mow pedal is disengaged, set the throttle control at half speed and engage the parking brake. Hold the steering wheel, brace your feet on the foot deck and brake pedal, and move the shift selector to the #1 position. Carefully rise off the seat; the engine should stop. If the engine stops, the interlock system is operating correctly.

6. Repeat this check with the shift selector in the #2 position. If the engine does not stop, stop the engine and find the problem before operating the machine. If you need assistance, contact your local TORO dealer.

PREPARING THE MACHINE FOR MOWING

To help align the machine for successive cutting passes, do the following to the No. 2 and No. 3 cutting-unit baskets:

1. Measure in approximately 12 cm from the outer edge of each basket.

2. Either place a strip of white tape or paint a line onto each basket paralleling the outer edge of each basket (Fig. 10).

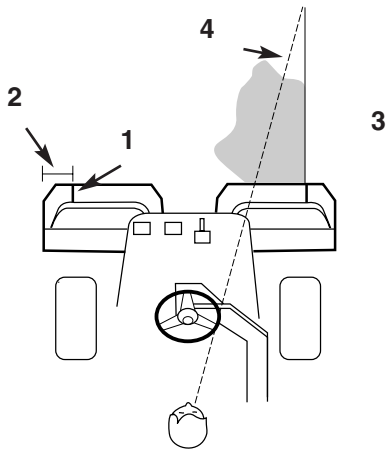

Figure 10

1. *Alignment strip*
2. *Approx. 12 cm*
3. *Cut grass on right*
4. *Keep focal spot 2–3 meters ahead of the machine*

TRAINING PERIOD

Before mowing greens with the GREENSMASTER 3050, we suggest that you find a clear area and practice starting and stopping, raising and lowering the cutting units, turning, etc. This will help you gain confidence in the performance of the GREENSMASTER 3050.

IMPORTANT. If you shift to the No. 2 position while cutting greens, no increase in speed will result. However, a sudden Increase In speed will develop when you actuate the lift pedal. For safety, use only the No. 1 position for cutting greens and the No. 2 position for transport.

PROTOTYPE

Operating

BEFORE MOWING

Inspect the green for debris, remove the flag from the cup, and determine the best direction in which to mow. Always mow in an alternate pattern from the previous mowing, so that the grass blades will be less apt to lay down and become difficult to cut.

MOWING PROCEDURES

1. Approach the green with the shift selector in the number 1 position. Start on one edge of the green so the ribbon procedure of cutting may be used. This holds compaction to a minimum and leaves a neat, attractive pattern on the greens.

IMPORTANT: Shift to the No. 1 position when approaching a green because machine speed will automatically be reduced when the cutting units are engaged. Higher speed will resume when the cutting units are disengaged.

2. Actuate the mow pedal as the front edge of the grass baskets cross the outer edge of the green. This procedure drops the cutting units to the turf and starts the reels.

NOTE: The No. 1 (rear) cutting unit reel will not start until all the cutting units are on the ground and No. 2 and No. 3 cutting units are cutting.

IMPORTANT Remember that the No. 1 cutting unit reel is delayed and therefore, you should practice to gain the timing necessary to minimize the clean-up mowing operation.

3. Overlap a minimal amount with the previous cut on return passes. To maintain a straight line across the green and keep the machine an equal distance from the edge of the previous cut, establish an imaginary sight line 2 to 3 meters ahead of the machine to the edge of the uncut portion of the green (Fig. 13 & 14). Some people find it useful to include the outer edge of the steering wheel as part of the sight line; i.e., keep the steering wheel edge aligned with a point that is always kept the same distance away from the front of the machine (Fig. 13 & 14).

4. As the front of the baskets cross the edge of the green, depress the lift pedal. This will stop the reels and lift the cutting units. Timing of this procedure is important, so the mowers do not cut into the fringe area. However, as much of the green as possible should be cut to minimize the amount of grass left to mow around the outer periphery.

5. Cut down on operating time and ease line-up for the next pass by momentarily turning the machine in the opposite direction, then turning in the direction of the uncut portion; i.e., if intending to turn right, first swing slightly left, then right. This will help get the machine more quickly aligned for the next pass. Follow the same procedure for turning in the opposite direction. It's good practice to try to make as short a turn as possible. However, turn in a wider arc during warmer weather to avoid bruising the turf.

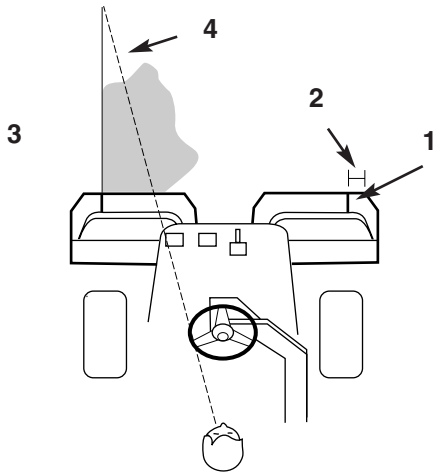

Figure 11

1. *Alignment strip*
2. *Approx. 12 cm*
3. *Cut grass on right*
4. *Keep local spot 2 3 meters ahead of the machine*

NOTE: Due to the nature of the power steering system, the steering wheel will not return to its original position after a turn has been completed.

IMPORTANT: Never stop on a green with the cutting unit reels operating because you may damage the turf. Stopping on a wet green with the Greens–master 3050 may leave marks or indentations from the wheels.

IMPORTANT: Prolonged idling of the machine after heavy use may cause a false alarm in the leak detector system, due to oil contraction as it cools. If this occurs, turn the engine off for a minute while the main hydraulic tank is refilled from the auxiliary

tank.

6.. Finish cutting the green by mowing the outer periphery. Be sure to change the direction of cutting from the previous mowing. Always keep weather and turf conditions in mind and be sure to change the direction of mowing from the previous cutting. Replace the flag.

78. Empty the grass baskets of all clippings before transporting to the next green. Heavy wet clippings place an undue strain on the baskets and will add unnecessary weight to the machine, thereby increasing the load on the engine, hydraulic system, brakes, etc.

TRANSPORT OPERATION

Make sure the cutting units are in the highest UP position. Set the shift selector in No. 2 if conditions will permit faster ground speed. In rough or hilly areas, shift to No. 1 and operate at slower ground speeds. Use the brakes to slow the machine while going down steep hills to avoid loss of control. Always approach rough areas at a reduced speed (shift selector in No. 1), and cross severe undulations carefully. Familiarize yourself with the width of the machine. Do not attempt to pass between objects that are close together so that you can prevent costly damage and down time.

INSPECTION AND CLEAN-UP AFTER MOWING

After mowing, thoroughly wash the machine. Use a garden hose without a nozzle so excessive water pressure doesn't contaminate and damage seals and bearings. After cleaning, inspect the machine for possible hydraulic fluid leaks, damage or wear to the hydraulic and mechanical components. Also check the cutting units for sharpness. Lubricate the mow and lift pedal and the brake shaft assembly with SAE 30 oil or spray lubricant to deter corrosion and keep the machine performing well during the next mowing operation.

Maintenance

Maintenance Schedule

Maintenance Procedure	Maintenance Interval & Service			
Check battery fluid level Check battery cable connections Service the air filter pre-cleaner Lubricate all grease fittings †Change the engine oil	Every 50 hours	Every 100 hours	Every 200 hours	Every 800 hours
†Replace the engine oil filter Replace the air filter element				
Check the reel bearing preload adjustment Torque the wheel lug nuts				
Replace the spark plugs Replace the fuel filter Check valve clearance Check the engine RPM (idle and full throttle)				

† Initial break in at 8 hours

Replace moving hoses Replace safety switches Fuel tank—drain and flush Hydraulic tank—drain and flush Replace the hydraulic oil	**Recommendations** Items are recommended every 2000 hours or 2 years, whichever occurs first.

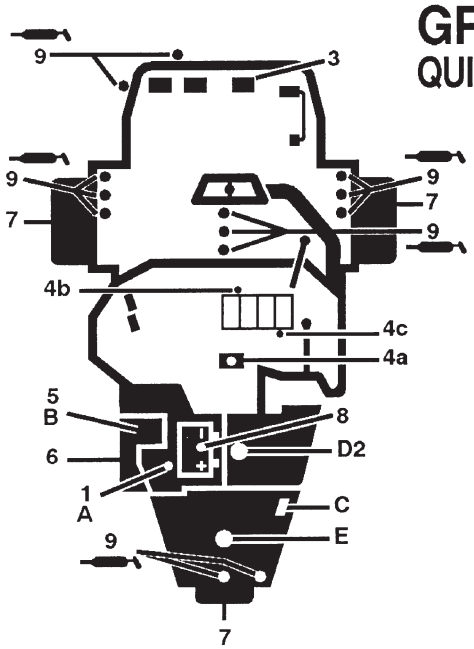

GREENSMASTER 3050
QUICK REFERENCE AID

SEE OPERATOR'S MANUAL

CHECK/SERVICE (daily)
1. OIL LEVEL, ENGINE
2. OIL LEVEL, HYDRAULIC TANK
3. BRAKE FUNCTION
4. INTERLOCK SYSTEM:
   4a. SEAT INTERLOCK
   4b. MOW - LIFT INTERLOCK
   4c. TRACTION INTERLOCK
5. AIR FILTER & PRECLEANER
6. ENGINE COOLING FINS
7. TIRE PRESSURE
   (55-83 kPa front, 55–103 rear)
   WHEEL NUT TORQUE (54–60 Nm)
8. BATTERY
9. LUBRICATION

FLUID SPECIFICATIONS / CHANGE INTERVALS

See operator's manual for initial change	FLUID TYPE	CAPACITY	CHANGE INTERVALS		FILTER PART NO.
			FLUID	FILTER	
A. ENGINE OIL	SAE 30 SG	*1.7 l	50 HRS.	100 HRS.	491056
B. AIR CLEANER	———	———	———	100 HRS.	394018
C. FUEL FILTER	———	———	———	1000 HRS.	94-2690
D. HYDRAULIC OIL	MOBIL 424	17 l	2000 HRS.	2000 HRS.	68-9880
E. FUEL TANK	UNLEADED GAS	32 l	———	———	———

*Including filter

95-7113

Daily Maintenance Checklist

- ✓ Safety Interlock Operation
- ✓ Brake Operation
- ✓ Engine Oil & Fuel Level
- ✓ Cooling system Fluid Level
- ✓ Radiator & Screen for Debris
- ✓ Unusual Engine Noises
- ✓ Unusual Operating Noises
- ✓ Hydraulic System Oil Level
- ✓ Hydraulic Hoses for Damage
- ✓ Fluid Leaks
- ✓ Tire Pressure
- ✓ Instrument Operations
- ✓ Lubricate All Grease Fittings
- ✓ Touch-up Damaged Paint

PROTOTYPE

LUBRICATION



Figure 12



Figure 13

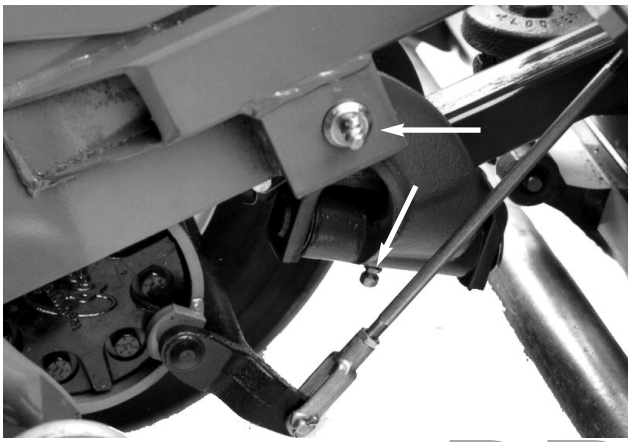

Figure 14



15



Figure 16



Figure 17



Figure 18

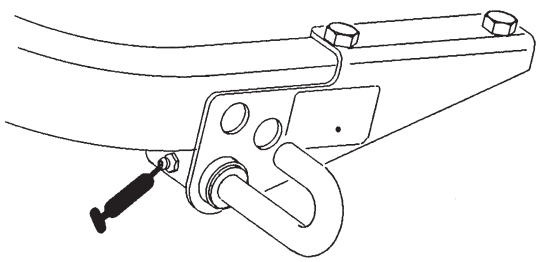

Figure 19

PDO

Selected Maintenance Locations

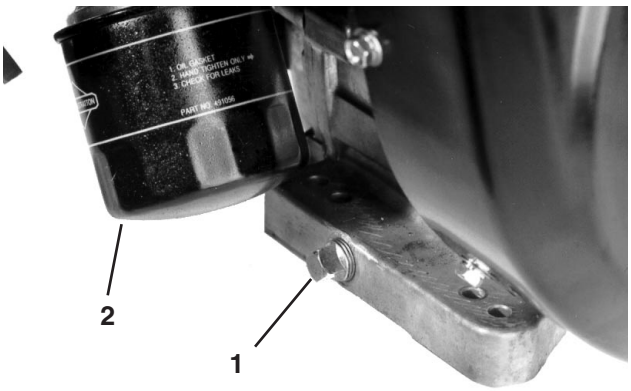

Figure 20

1. Drain plug *2. Oil filter*

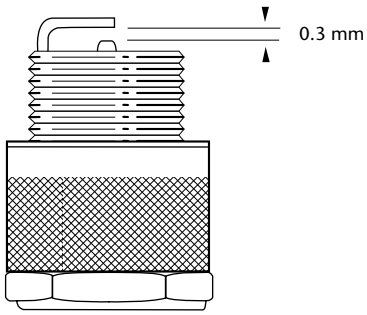

Figure 23



Figure 21

1. Air cleaner cover

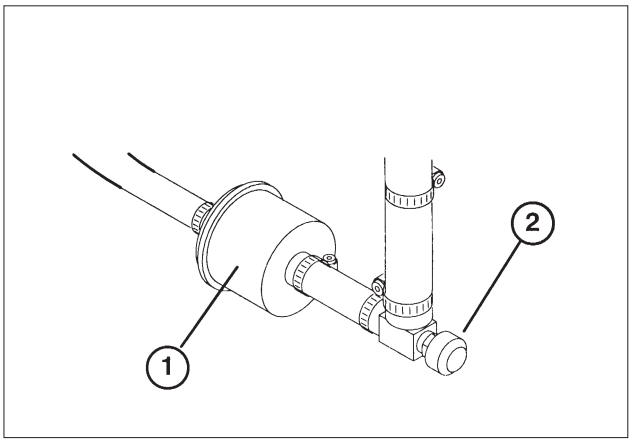

Figure 24

1. Fuel filter *2. Shut-off valve*



Figure 22

1. Foam element *2. Paper element*

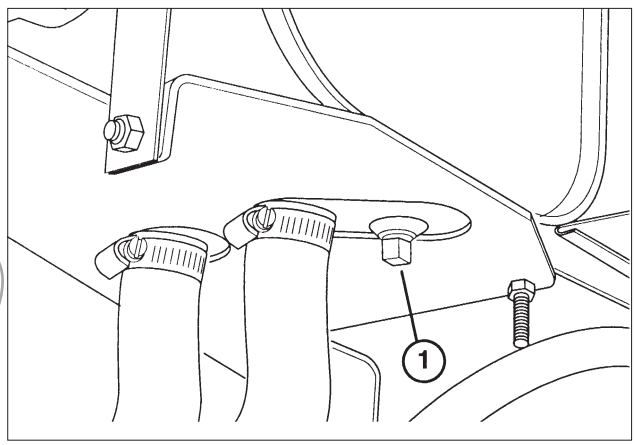

Figure 25

1. Hydraulic reservoir drain plug

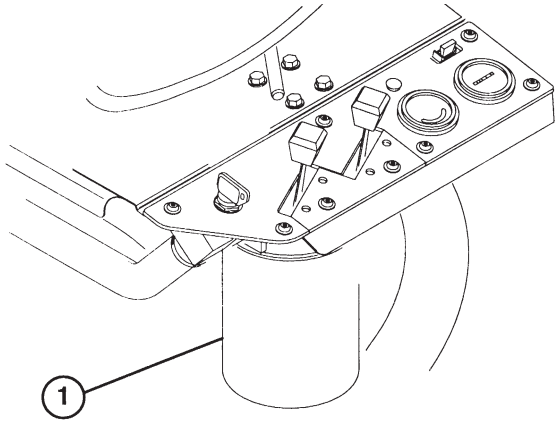

Figure 26

1. Hydraulic filter

PROTOTYPE

PROTOTYPE

PROTOTYPE



PROTOTYPE