Form No. 3380-290 Rev E

TORO®

Count on it.

Parts Catalog

Greensmaster® 3300 TriFlex® Traction Unit

Model No. 04510—Serial No. 314000001 and Up

Register at www.Toro.com.
Original Instructions (EN)

CE

3380-290 E

Ordering Replacement Parts

To order replacement parts, please supply the part number, the quantity, and the description of each part desired.

Understanding Reference Numbers

Each identified part in an illustration has a reference number. The reference number for a part also appears in the parts list, along with other information about the part.

This catalog uses two special reference number formats, one to indicate parts in a service assembly and another to indicate the quantity of a given part in an illustration.

Service Assembly Reference Numbers

Parts in service assemblies have reference numbers in the form a:b. The a represents the reference number of the entire service assembly and the b represents a sequential number unique to each part within the service assembly.

For example, a wheel assembly might be identified by reference number 6, the tire by 6:1, the valve by 6:2, and the wheel by 6:3. When you order the assembly identified by reference number 6, you receive all parts identified by reference numbers 6:1,6:2, and 6:3. However, you may also order any part individually. Reference numbers of this type appear in illustration and in parts lists.

Reference Numbers Indicating Quantity

In an illustration, if a reference number indicates more than one part, the reference number has the form nX y. The n represents the quantity of the part, the X is the multiplication symbol, and the y represents the reference number.

For example, in an illustration, the reference number 2X 37 means that two of the parts identified by reference number 37 are indicated.

Contents

Roll-Over Protection System Assembly . . . 4
Brake Cable Grommet Assembly . . . 5
Frame Assembly . . . 6
Platform Assembly . . . 7
Right Hand Support Platform Assembly . . . 8
Seatbase Assembly . . . 9
Steering Arm and Adjuster Assembly . . . 10
Brake Cable and Lever Assembly . . . 11
Back Wheel Assembly . . . 12
Hydraulic Cylinder Assembly No. 117-4480 . . . 13
Front Wheel Assembly . . . 14
Right Hand Brake Assembly No. 115-9441 . . . 15
Left Hand Brake Assembly No. 115-9440 . . . 16
Right Hand Wheel Motor Assembly No. 117-4302 . . . 17
Left Hand Wheel Motor Assembly No. 117-4303 . . . 18
Console and Reel Control Assembly . . . 19
Traction Interface Control Assembly . . . 20
Ignition, Throttle and Choke Control Assembly . . . 21
Console Cable Routing Assembly . . . 22
Engine and Exhaust Assembly . . . 23
Battery Assembly . . . 24
Wire Harness Assembly . . . 25
Pump Coupling Assembly . . . 26
Hydraulic Pump Assembly No. 121-9558 . . . 27
Neutral Centering Assembly . . . 29
Traction Drive Hydraulic Line Assembly . . . 30
Traction Drive Hose Routing Assembly . . . 31
Hydraulic Mow Assembly . . . 32
Hydraulic Mow Manifold Assembly . . . 33
Hydraulic Mow Manifold Assembly No. 117-9858 . . . 34
Hydraulic Mow Clamp Assembly . . . 35
Hydraulic Mow Hose Routing Assembly . . . 36
Hydraulic Mow Reel Motor Assembly . . . 37
Hydraulic Reel Motor Assembly No. 115-3321 . . . 38
Hydraulic Mow Gear Pump Assembly . . . 39
Hydraulic Gear Pump Assembly No. 114-9956 . . . 40
Lift Circuit Assembly . . . 41
Steering Valve Assembly No. 114-4672 . . . 43
Hydraulic Cylinder Assembly No. 119-8129 . . . 44
Hydraulic Cylinder Assembly No. 119-8128 . . . 45
Hydraulic Lift Manifold Assembly . . . 46
Hydraulic Lift Manifold Assembly No. 125-5187 . . . 47
Steering Circuit Assembly . . . 48
Fuel Line and Carbon Canister Hose Routing Assembly . . . 49
Fuel Tank Assembly . . . 51
Hydraulic Tank and Leak Detector Assembly . . . 52
Suspension and Basket Assembly . . . 53
Suspension Pin Position Assembly . . . 54
Suspension A-Arm Assembly . . . 55
Suspension Crossarm Assembly . . . 56
Attachments and Accessories . . . 57

© 2021—The Toro® Company
8111 Lyndale Avenue South
Bloomington, MN 55420

Contact us at www.Toro.com.
Printed in the USA.
All Rights Reserved

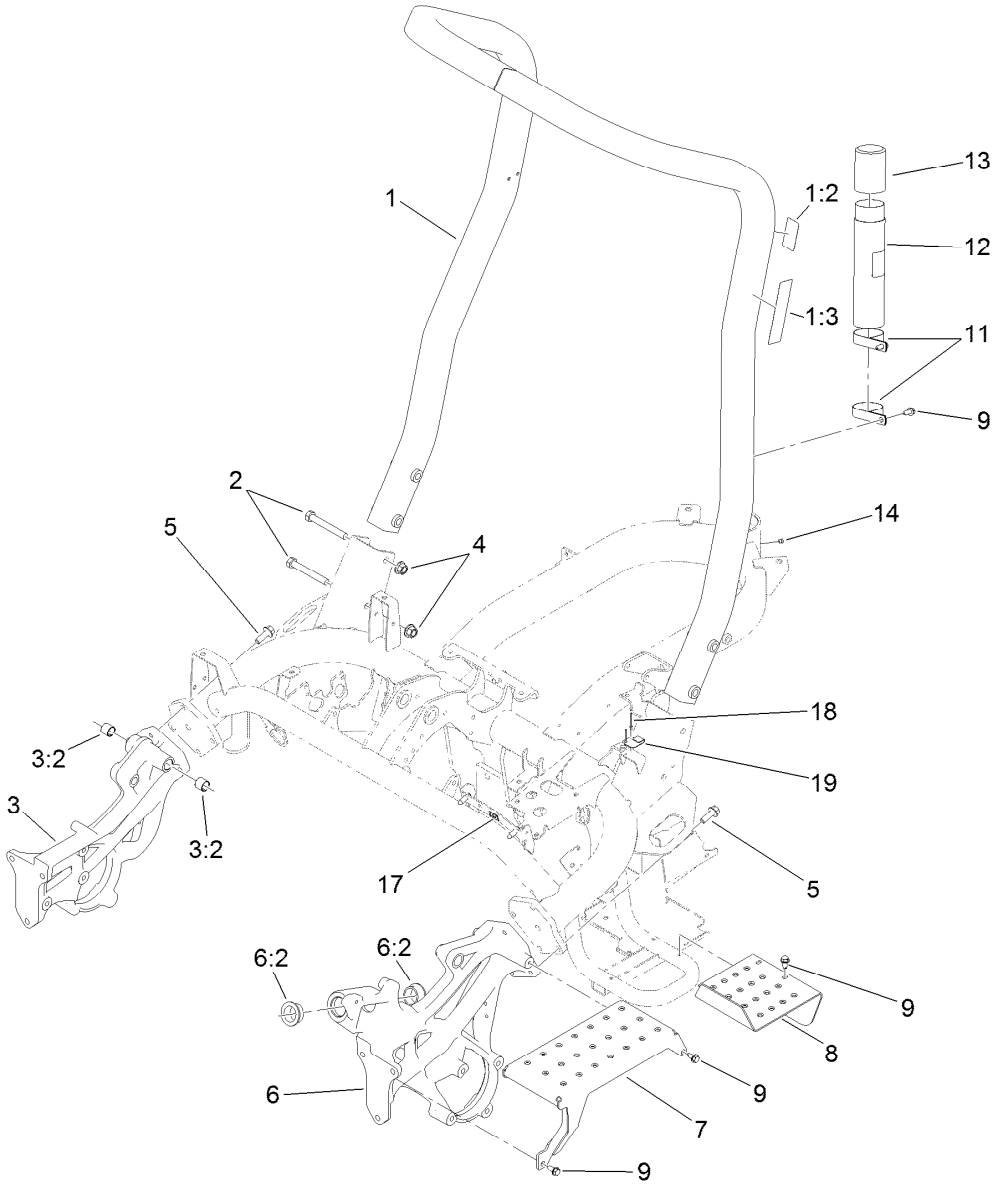

Roll-Over Protection System Assembly

Ref.	Part Number	Qty.	Description
1	115-8206	1	ROPS ASM
1:2	115-8199	1	Decal-ROPS
1:3	115-8226	1	Decal-ROPS
2	325-35	4	Screw-HH
3	117-9023	1	Casting-Side, RH
3:2	94-9609	2	Bushing-Straight
4	99-5107	4	Nut-Lock
5	117-9035	8	Screw-HHF
6	117-9022	1	Casting-Side, LH
6:2	60-0080	2	Bushing

Ref.	Part Number	Qty.	Description
7	117-9051-01	1	Step
8	119-4468-01	1	Plate-Step
9	32104-32	9	Screw-HWH
11	2412-133	2	Clamp-R
12	104-7050	1	Tube-Manual
13	104-7048	1	Cap-Housing
14	302-59	1	Plug-EXT Hex Spl
17	119-1730	1	Receptacle-Clip, Mini
18	3269-32	2	Rivet-Pop
19	121-5865	1	Clip-Cover, Back

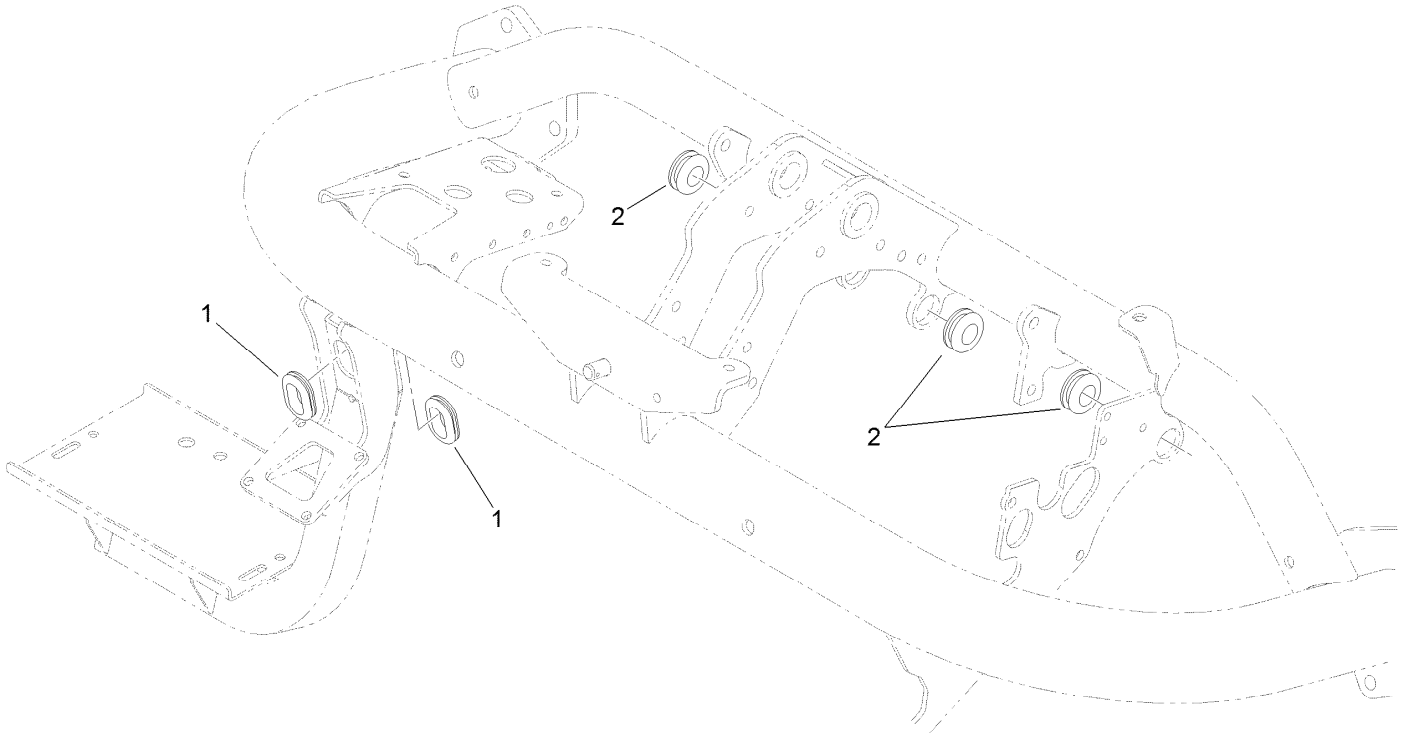

Brake Cable Grommet Assembly

Ref.	*Part Number*	*Qty.*	*Description*
1	240-5	2	Grommet
2	98-8529	3	Grommet

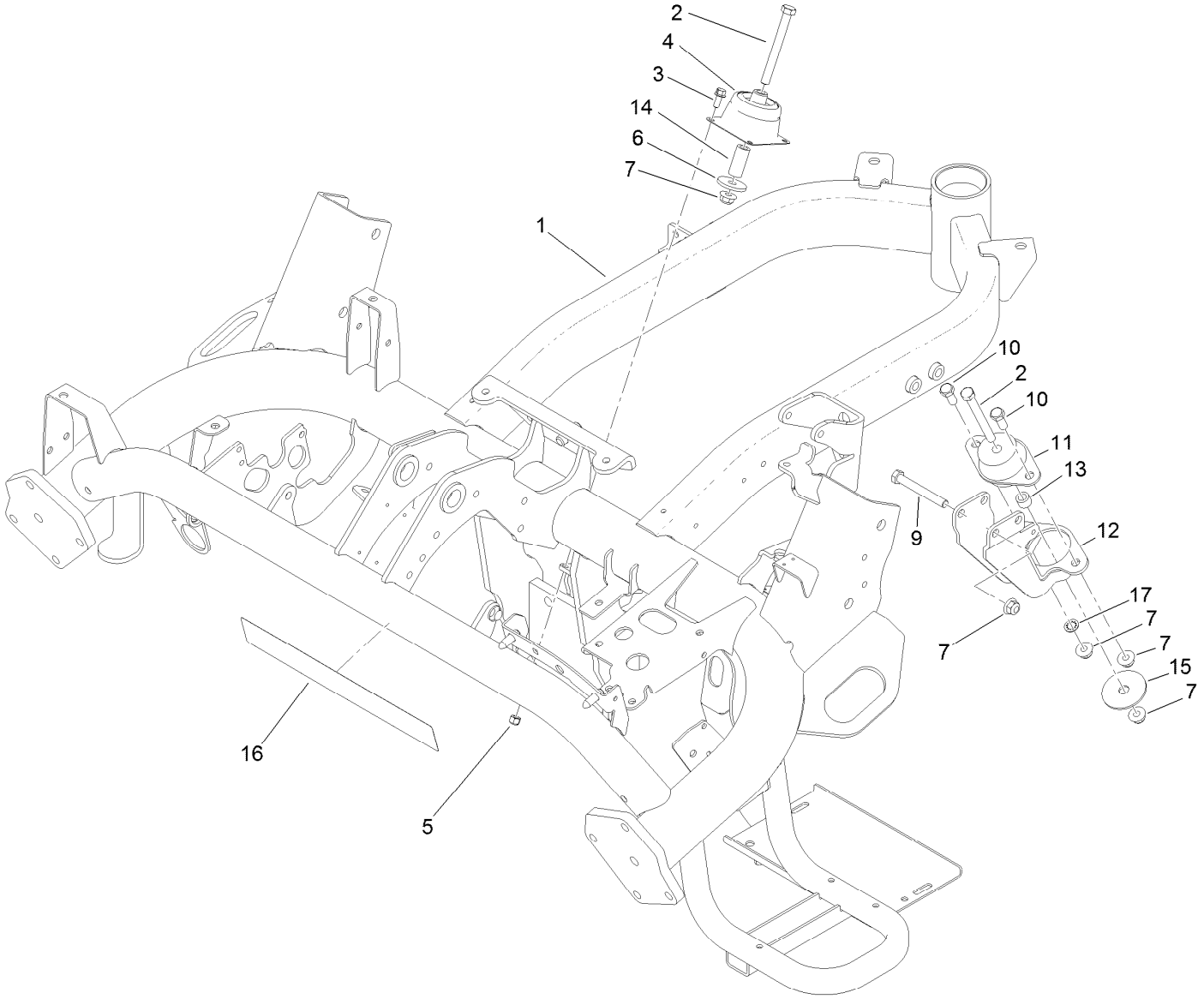

Frame Assembly

Ref.	Part Number	Qty.	Description
1	121-5876-01	1	Frame
2	323-15	3	Screw-HH
3	3234-33	8	Screw-HHF
4	112-5757	2	Mount-Engine, Rubber
5	3296-42	8	Nut-Lock, NI
6	117-9330	2	Spacer
7	104-8301	7	Nut-HF, NI
9	323-14	2	Screw-HH

Ref.	Part Number	Qty.	Description
10	323-5	2	Screw-HH
11	53-9680	1	Mount-Engine
12	117-9256-01	1	Mount-Engine, Rear
13	52-2480	1	Spacer-Wheel
14	104-0151	2	Spacer
15	87-5100	1	Washer-Snubbing
16	119-9348	1	Decal
17	3254-6	1	Washer-Lock, Internal

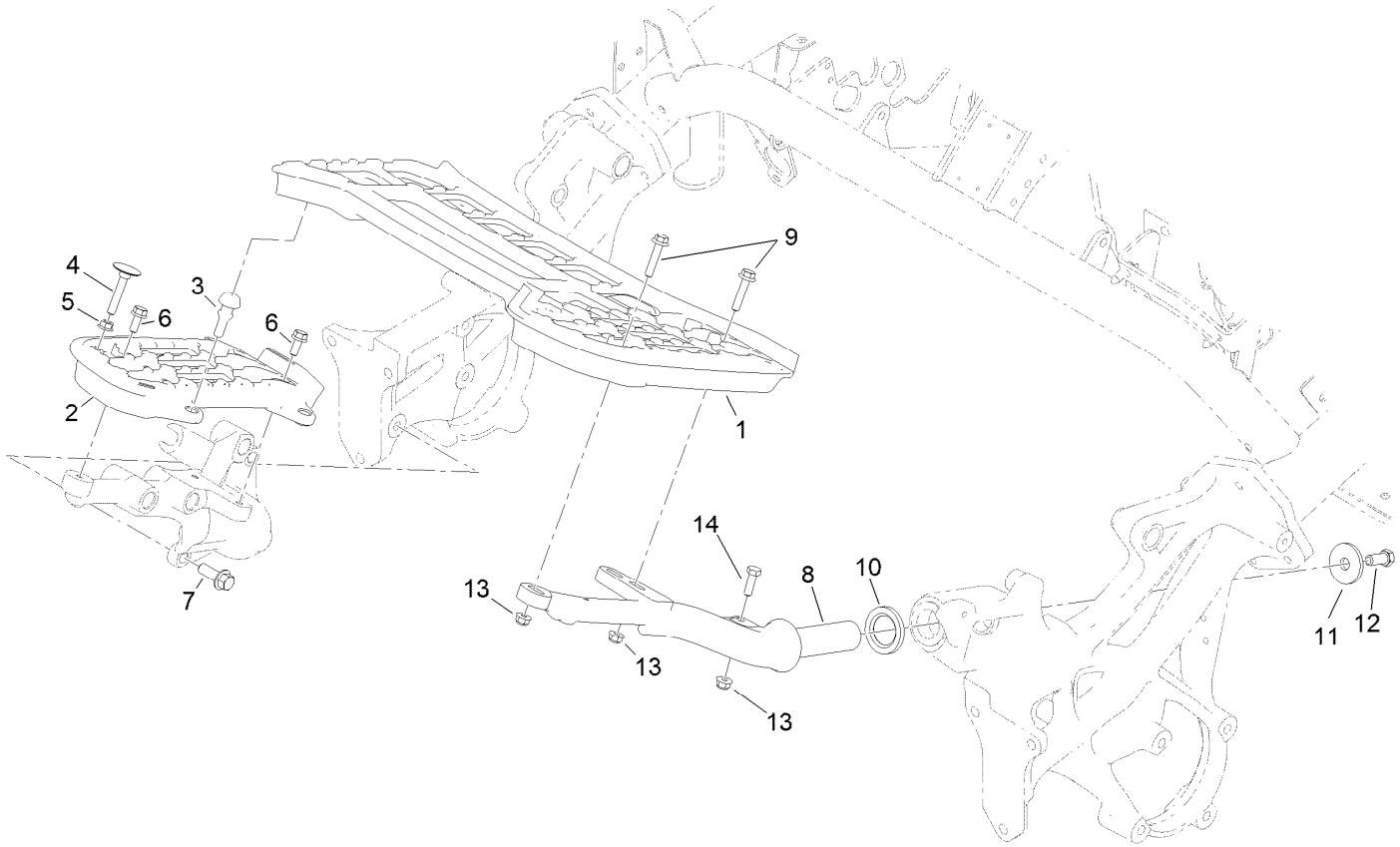

Platform Assembly

Ref.	Part Number	Qty.	Description
1	117-9009	1	Platform-LH
2	117-9008	1	Platform-RH
3	117-9072	2	Bumper-Rubber
4	115-8240	1	Screw-Elevator
5	32128-20	1	Nut-HF
6	3234-47	3	Screw-HHF
7	117-9035	3	Screw-HHF
8	117-9006-01	1	Support-Platform, LH
9	115-1794	3	Screw-HHF
10	94-8946	1	Washer-Thrust
11	84-1560	1	Washer-Thrust
12	324-4	1	Screw-HH
13	104-8300	4	Nut-HF, NI
14	322-5	1	Screw-HH

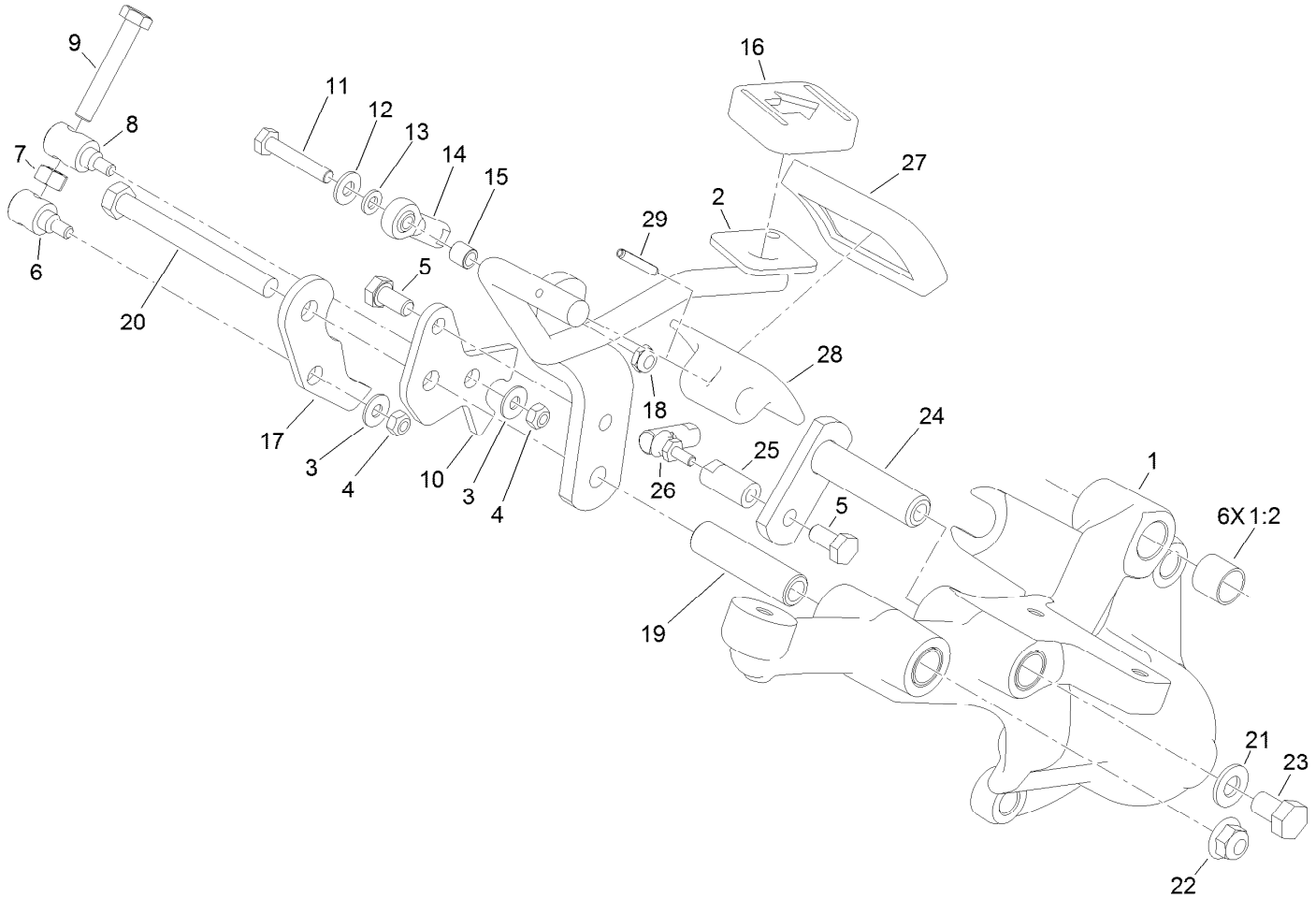

Right Hand Support Platform Assembly

Ref.	Part Number	Qty.	Description
1	117-9019	1	Support-Platform, RH
1:2	256-311	6	Bushing-Split
2	119-1725-01	1	Rod-Traction
3	3256-1	2	Washer-Flat
4	33023-00	2	Nut-Lock
5	33114-016	2	Screw-HH
6	94-1374	1	Trunnion-Bracket, Mow
7	33014-00	1	Nut-Hex
8	94-1375	1	Trunnion-Bracket, Lock
9	94-3489	1	Screw-HH
10	117-9021	1	Bracket-Lock
11	321-9	1	Screw-HH
12	3256-22	1	Washer-Flat
13	33093-00	1	Washer-Flat
14	2411-41	1	Rod End-Ball Joint

Ref.	Part Number	Qty.	Description
15	99-3545	1	Spacer
16	74-9110	1	Pad-Pedal, Reverse
17	125-3011	1	Bracket-Mow
18	3296-56	1	Nut-Lock, NI
19	94-1371	1	Spacer
20	323-42	1	Screw-HH
21	3256-24	1	Washer-Flat
22	104-8301	1	Nut-HF, NI
23	33115-016	1	Screw-HH
24	94-1300	1	Lock-Neutral
25	94-1386	1	Shaft-Pedal
26	2411-38	1	Joint-Ball
27	74-9100	1	Pad-Pedal, Forward
28	117-9507	1	Pedal-Accelerator
29	32121-45	1	Pin-Spring

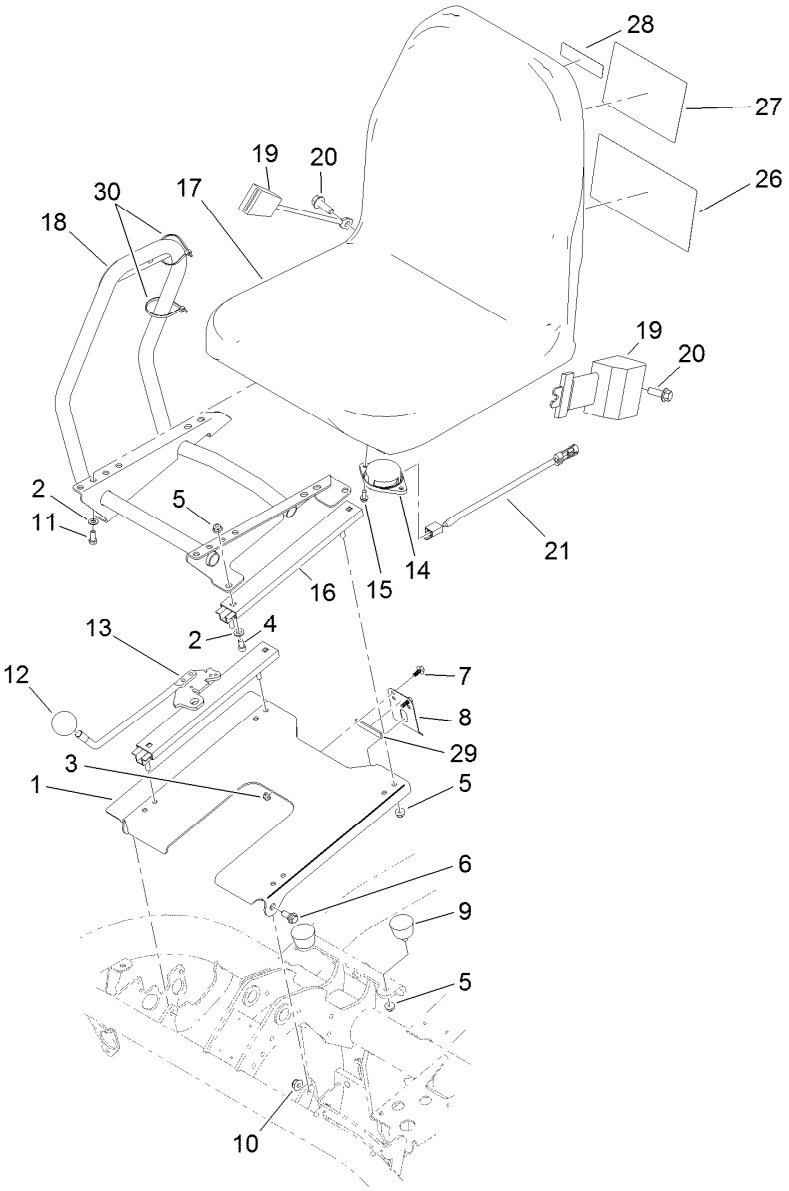

Seatbase Assembly

Ref.	Part Number	Qty.	Description
1	117-4440-03	1	Plate-Seat
2	3256-23	8	Washer-Plain
3	104-7201	2	Nut-HF, NI
4	3274-10	4	Screw-HSH
5	104-8300	10	Nut-HF, NI
6	94-7582	2	Bolt-Shoulder
7	99-6810	2	Screw-HHF
8	66-2630	1	Latch-Seat
9	68-3270	2	Bumper-Rubber
10	104-8301	2	Nut-HF, NI
11	322-3	4	Screw-HH
12	233-48	1	Knob
13	119-4483	1	Seat Adjuster Lever ASM
14	92-6282	1	Switch-Seat
15	32144-10	2	Screw-HWH
16	92-8990	1	Adjuster-Seat, Non-Locking
17	104-4620	1	Seat
18	121-5189-03	1	Mount-Console
19	100-4928	1	Belt-Seat
20	117-9035	2	Screw-HHF
21	108-8657	1	Harness-Wire, Seat
26	115-8159	1	Decal-Service, Spanish
26	115-8160	1	Decal-Service, French
26	115-8161	1	Decal-Service, German
26	115-8162	1	Decal-Service, Swedish
26	115-8163	1	Decal-Service, Italian
26	115-8164	1	Decal-Service, Portuguese
26	115-8165	1	Decal-Service, Norwegian
26	115-8166	1	Decal-Service, Finnish
26	115-8167	1	Decal-Service, Danish
26	115-8168	1	Decal-Service, Dutch
26	115-8169	1	Decal-Service, Japanese
26	119-9345	1	Decal-Aid, Quick Reference
27	115-8156	1	Decal-Speed, Clip
28	117-2718	1	Decal-Arrester, Spark
29	120-5753	1	Strip-Foam
30	3290-379	2	Tie-Cable

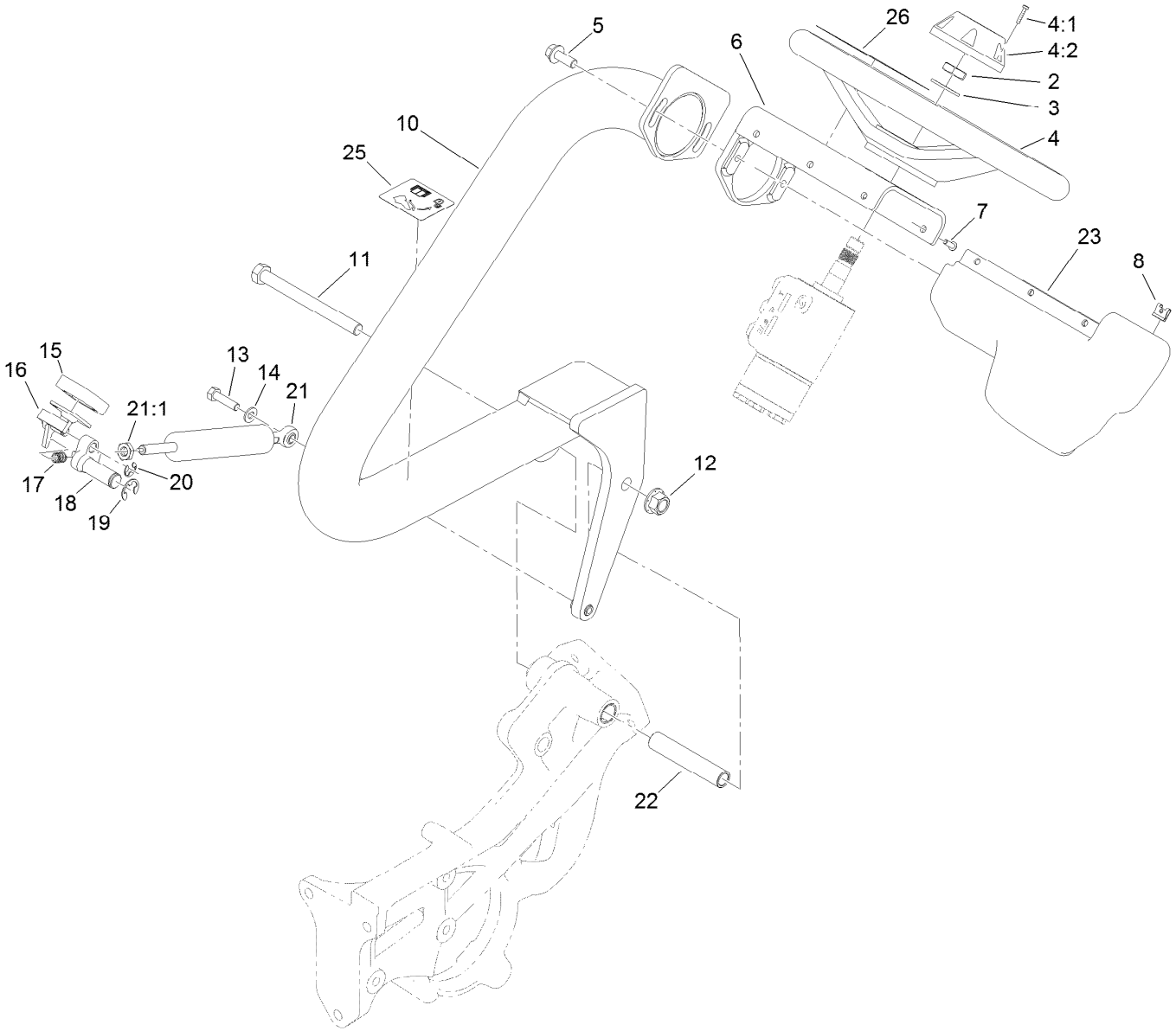

Steering Arm and Adjuster Assembly

Ref.	Part Number	Qty.	Description
2	3296-33	1	Nut-Lock, NI
3	3256-27	1	Washer-Flat
4	75-0560	1	Steering Wheel ASM
4:1	32144-21	1	Screw
4:2	68-5140	1	Cap-Wheel, Steering
5	3234-42	2	Screw-HHF
6	117-9346-03	1	Mount-Steering
7	3274-39	6	Screw-HSBH
8	3290-277	6	Nut-Speed
10	117-4444-01	1	Arm-Steering
11	325-22	1	Screw-HH
12	99-5107	1	Nut-Lock
13	322-47	1	Screw-HH
14	3256-23	1	Washer-Plain

Ref.	Part Number	Qty.	Description
15	74-9110	1	Pad-Pedal, Reverse
16	117-4457	1	Lever
17	106-9791	1	Spring
18	117-9024	1	Lever-Pivot
19	32120-19	1	E-Ring
20	105-7004	1	E-Ring
21	125-5181	1	Cylinder-Gas
21:1	112-8617	1	Nut-Hex
22	117-9002	1	Spacer
23	119-9300	1	Cover-Valve, Steering
25	119-9346	1	Decal-Arm, Steering
26	121-2640	1	Decal-Danger, CE
26	121-2641	1	Decal-Danger

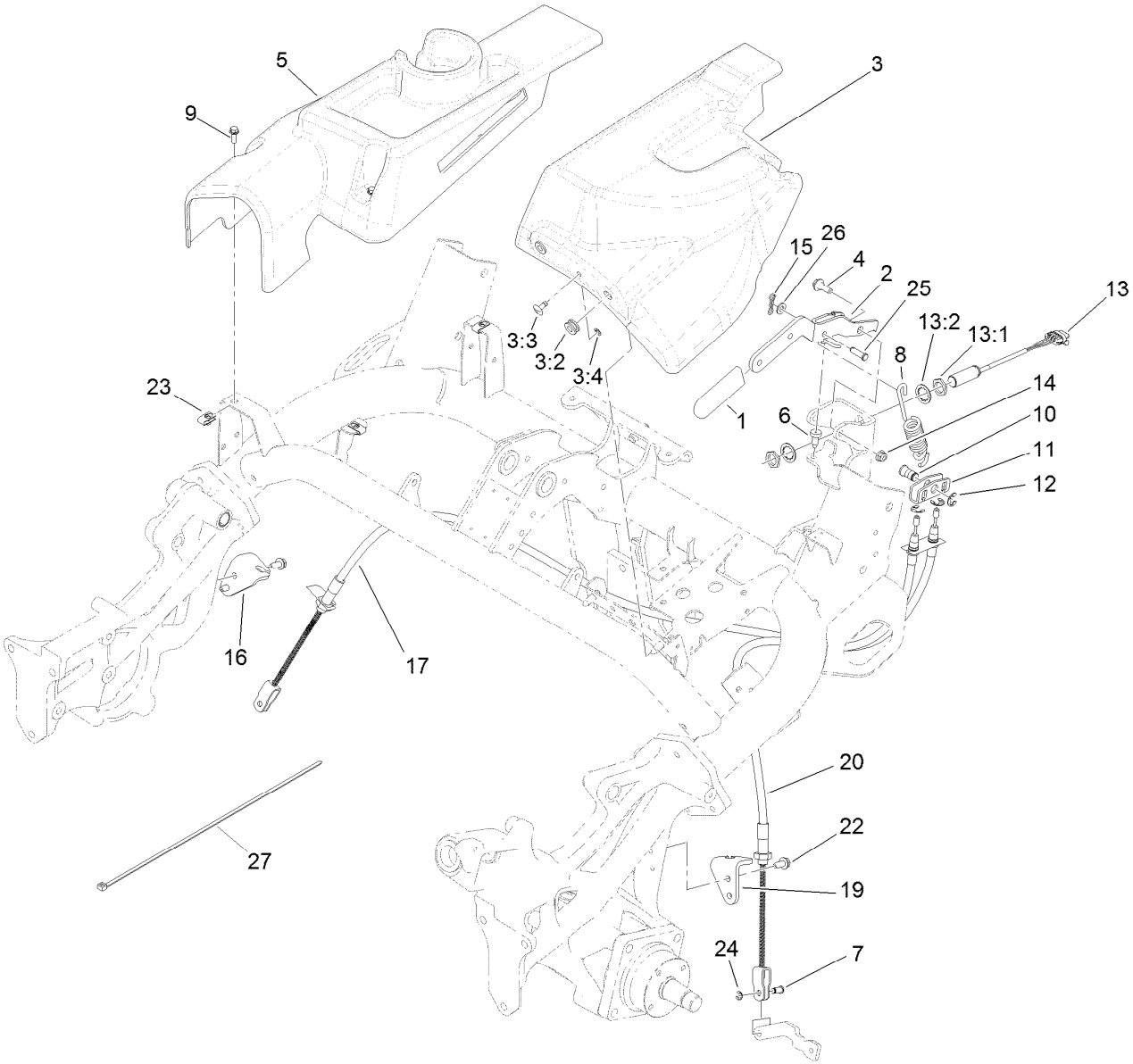

Brake Cable and Lever Assembly

Ref.	Part Number	Qty.	Description
1	21-1880	1	Grip-Handle
2	119-2149-03	1	Lever-Brake
3	121-5868	1	LH Cover ASM
3:2	92-5972	2	Grommet-Rubber
3:3	119-1728	1	Stud-1/4 Turn
3:4	119-1729	1	Retainer-Stud
4	116-1297	2	Screw-Shoulder
5	119-1678	1	Cover-Side, RH
6	87-8460	1	Bumper-Rubber
7	109-6887	2	Pin-Clevis
8	119-2144	1	Spring-Extention
9	115-5103	3	Screw-HHF
10	119-2146	1	Pin
11	114-9994	1	Bracket-Equalizer, Cable
12	32120-47	3	Ring-Retaining, External

Ref.	Part Number	Qty.	Description
13	115-5300	1	Proximity Switch ASM
13:1	117-3207	2	Nut-Hex
13:2	117-3208	2	Washer-Lock, Internal Tooth
14	104-8300	2	Nut-HF, NI
15	119-1415	1	Pin-Cotter, Locking
16	115-5787	1	Bracket-Brake Cable, RH
17	115-9412	1	Cable-Brake, RH
19	114-9997	1	Bracket-Brake Cable, LH
20	114-9996	1	Cable-Brake, LH
22	32104-32	4	Screw-HWH
23	107069	3	Clip
24	701197	2	E-Ring
25	283-61	1	Pin-Yoke
26	3256-23	1	Washer-Plain
27	3290-379	1	Tie-Cable

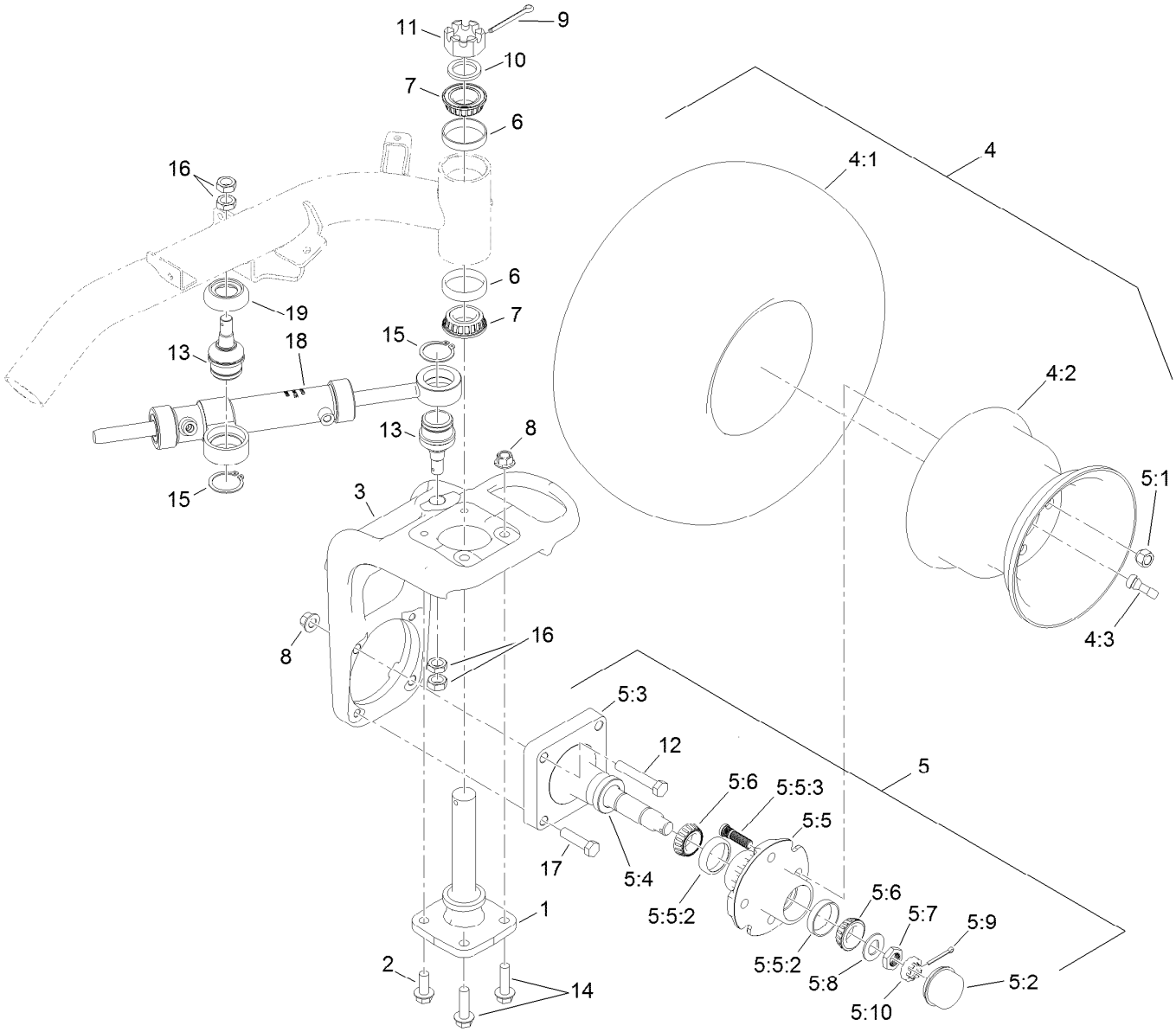

Back Wheel Assembly

Ref.	Part Number	Qty.	Description
1	115-2657	1	Spindle-Steering
2	3234-38	2	Screw-HHF
3	117-4366-01	1	Base-Fork, Rear
4		1	Wheel And Tire ASM ●
4:1	120-2783	1	Tire
4:2	217-60	1	Rim
4:3	232-27	1	Stem-Valve
5	119-4490	1	Wheel Spindle ASM
5:1	242-50	4	Nut-Lug
5:2	241-119	1	Cap-Dust
5:3	112-7173	1	Spindle
5:4	112-1690	1	Seal-Oil
5:5	117-9093	1	Hub ASM
5:5:2	254-72	2	Bearing-Cup, Tapered
5:5:3	114-3918	4	Stud-Wheel
5:6	254-92	2	Cone-Bearing, Outer
5:7	117-8260	1	Nut

Ref.	Part Number	Qty.	Description
5:8	117-8259	1	Washer-Spindle
5:9	3272-18	1	Pin-Cotter
5:10	93-0307	1	Nut-Lock, Retainer
6	115-9471	2	Bearing-Cup
7	115-9472	2	Bearing-Cone And Seal
8	99-5107	4	Nut-Lock
9	3272-37	1	Pin-Cotter
10	18-6320	1	Washer-Steering
11	32136-9	1	Nut-Hex, Slotted
12	325-12	2	Screw-HH
13	117-9875	2	Joint-Ball
14	3234-22	2	Screw-HHF
15	32151-104	2	Ring-Retaining, External
16	3220-6	4	Nut-Jam
17	325-8	2	Screw-HH
18	117-4480	1	HYD Cylinder ASM
19	120-2026	1	Spacer-Cylinder

● Not serviced separately

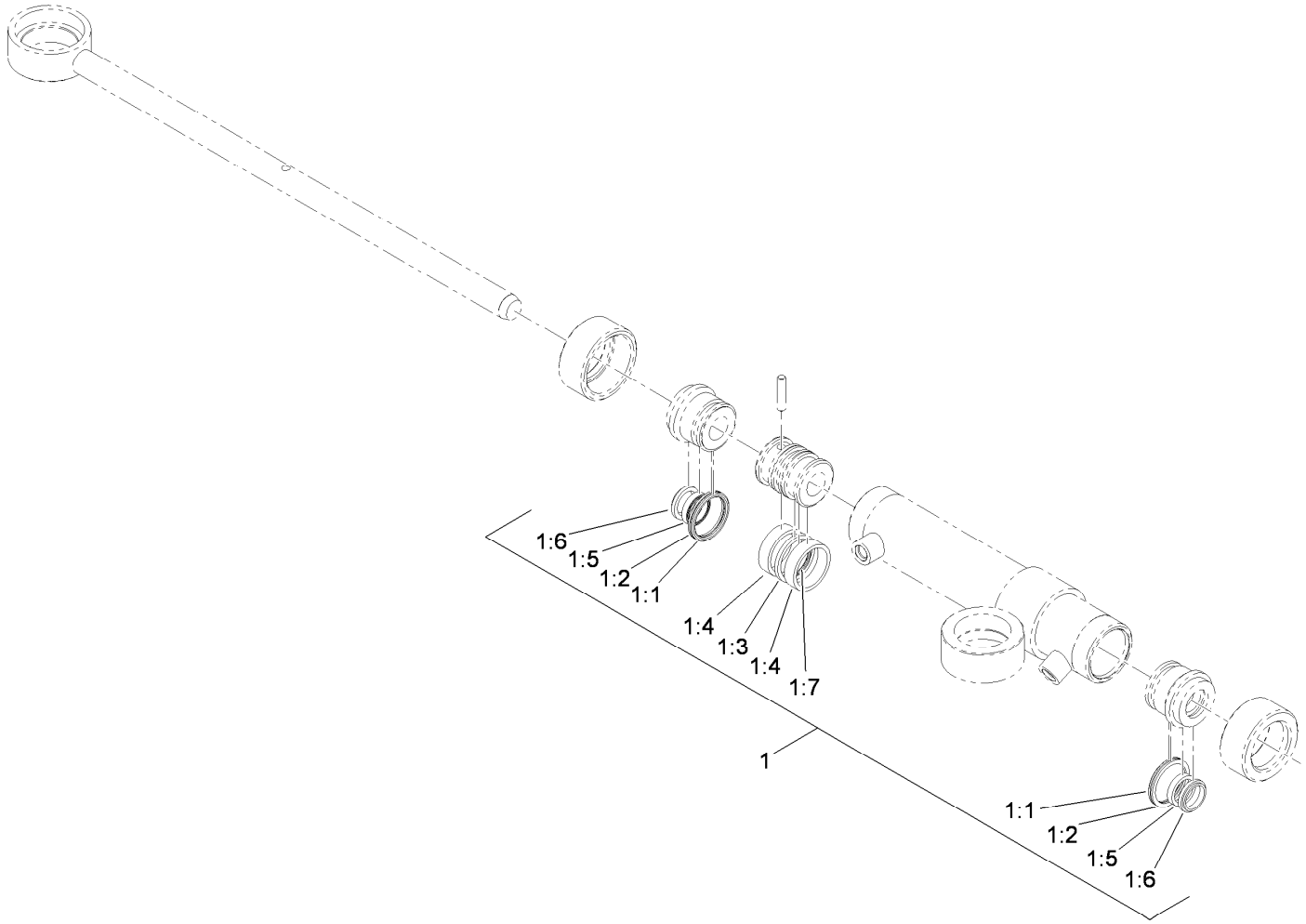

Hydraulic Cylinder Assembly No. 117-4480

Ref.	*Part Number*	*Qty.*	*Description*
1	119-7124	1	Kit-Seal
1:1		2	O-Ring ●
1:2		2	Ring-Backup ●
1:3		1	Seal-Psp ●
1:4		2	Ring-Wear ●
1:5		2	Seal-Bs ●
1:6		2	Seal-Dust ●
1:7		1	O-Ring ●

● Not serviced separately

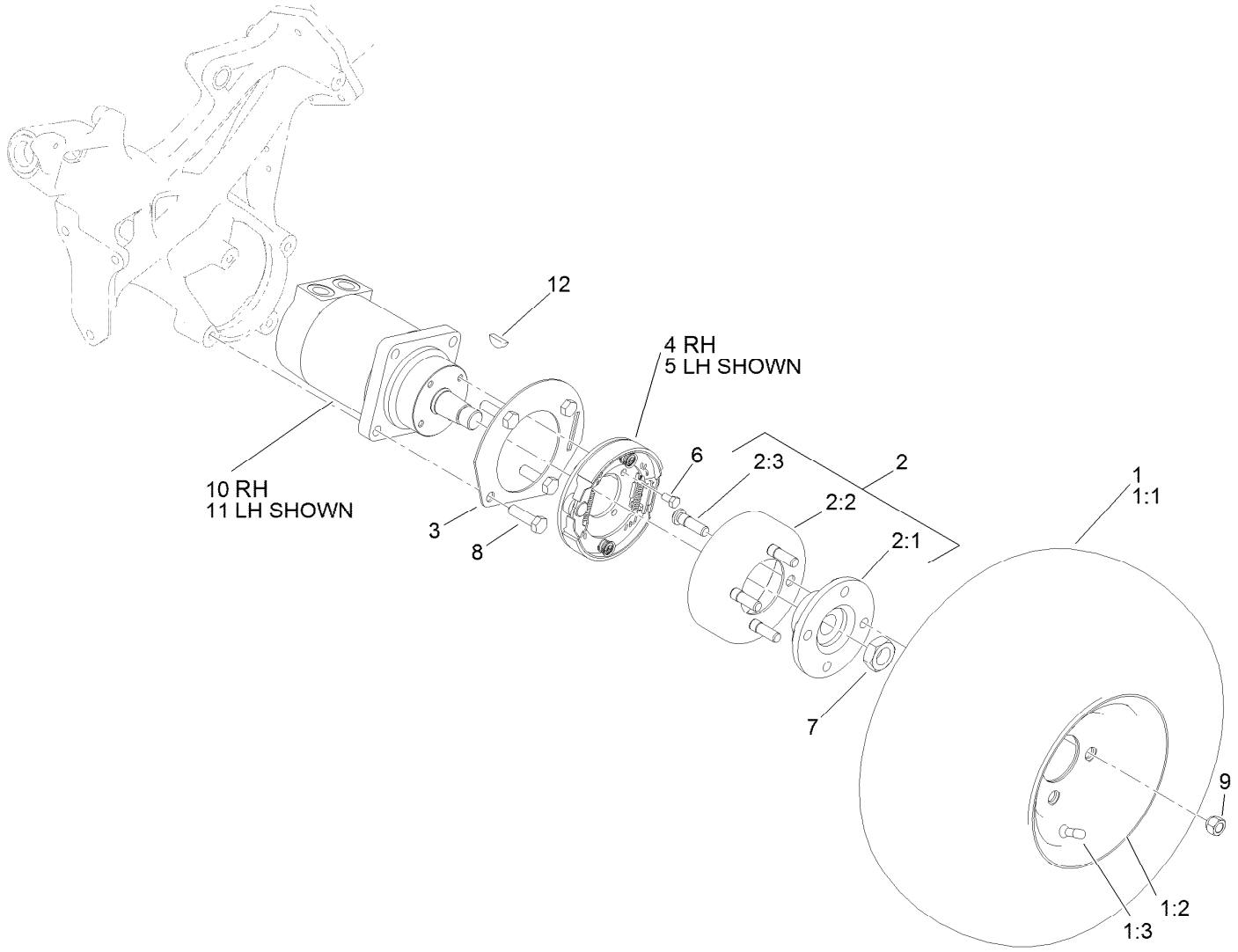

Front Wheel Assembly

Ref.	Part Number	Qty.	Description
1		2	Wheel And Tire ASM ●
1:1	120-2783	1	Tire
1:2	117-9032	1	Rim
1:3	232-27	1	Stem-Valve
2	115-2661	2	Brake Drum ASM
2:1	115-2662-03	1	Hub-Wheel
2:2	115-2663	1	Drum-Brake
2:3	85-6540	4	Stud-Drive
3	114-9998-03	2	Tab-Lever, Brake

Ref.	Part Number	Qty.	Description
4	115-9441	1	RH Brake ASM
5	115-9440	1	LH Brake ASM
6	322-2	8	Screw-HH
7	26-3790	2	Nut-Lock
8	325-7	8	Screw-HH
9	242-50	8	Nut-Lug
10	117-4302	1	RH Wheel Motor ASM
11	117-4303	1	LH Wheel Motor ASM
12	3257-42	1	Key-Woodruff

● Not serviced separately

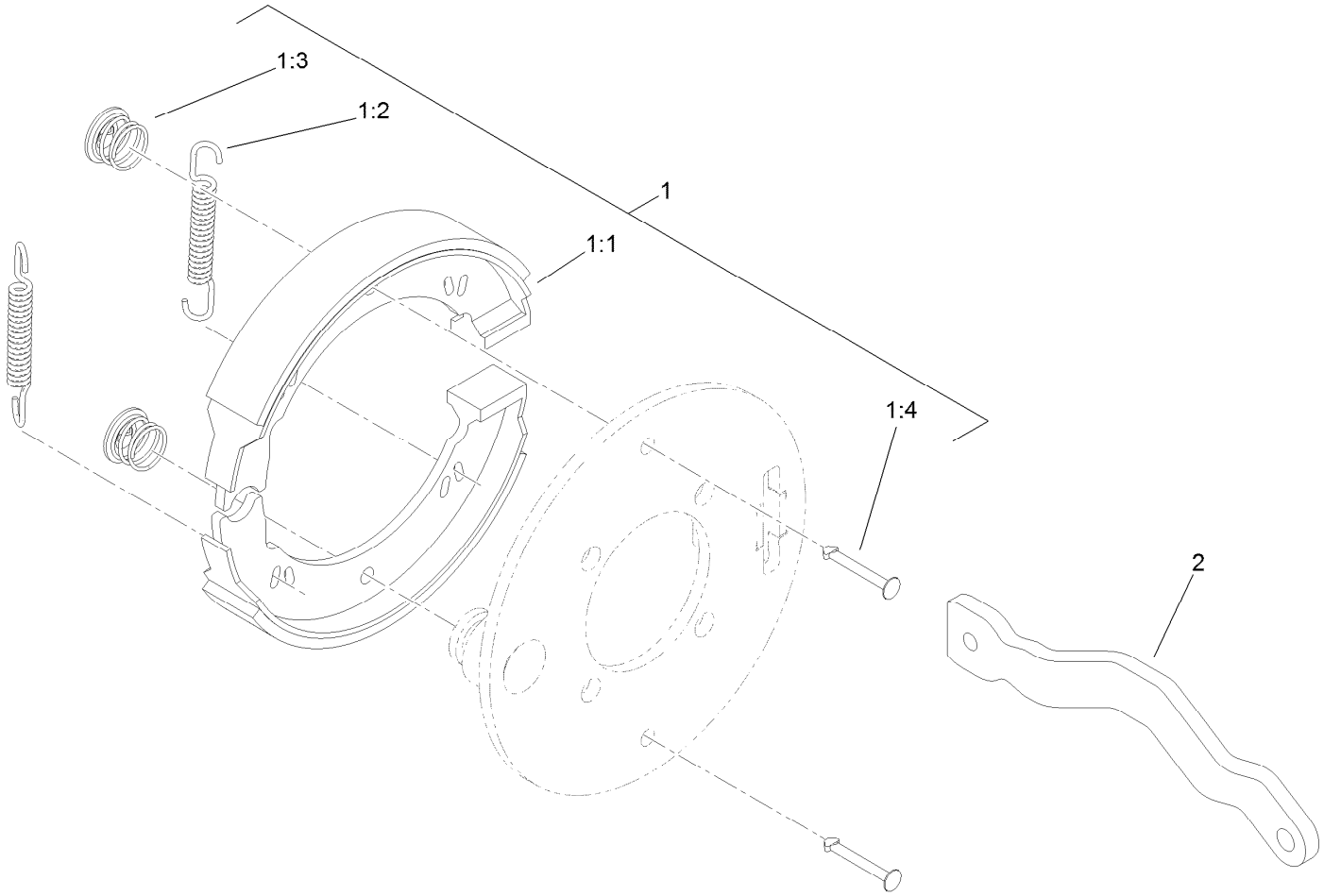

Right Hand Brake Assembly No. 115-9441

Ref.	*Part Number*	*Qty.*	*Description*
1	119-7136	1	Kit-Brake
1:1		2	Shoe-Brake ●
1:2		2	Spring ●
1:3		2	Clip ●
1:4		2	Pin-Retainer ●
2	115-5789	1	Lever-Brake, RH

● Not serviced separately

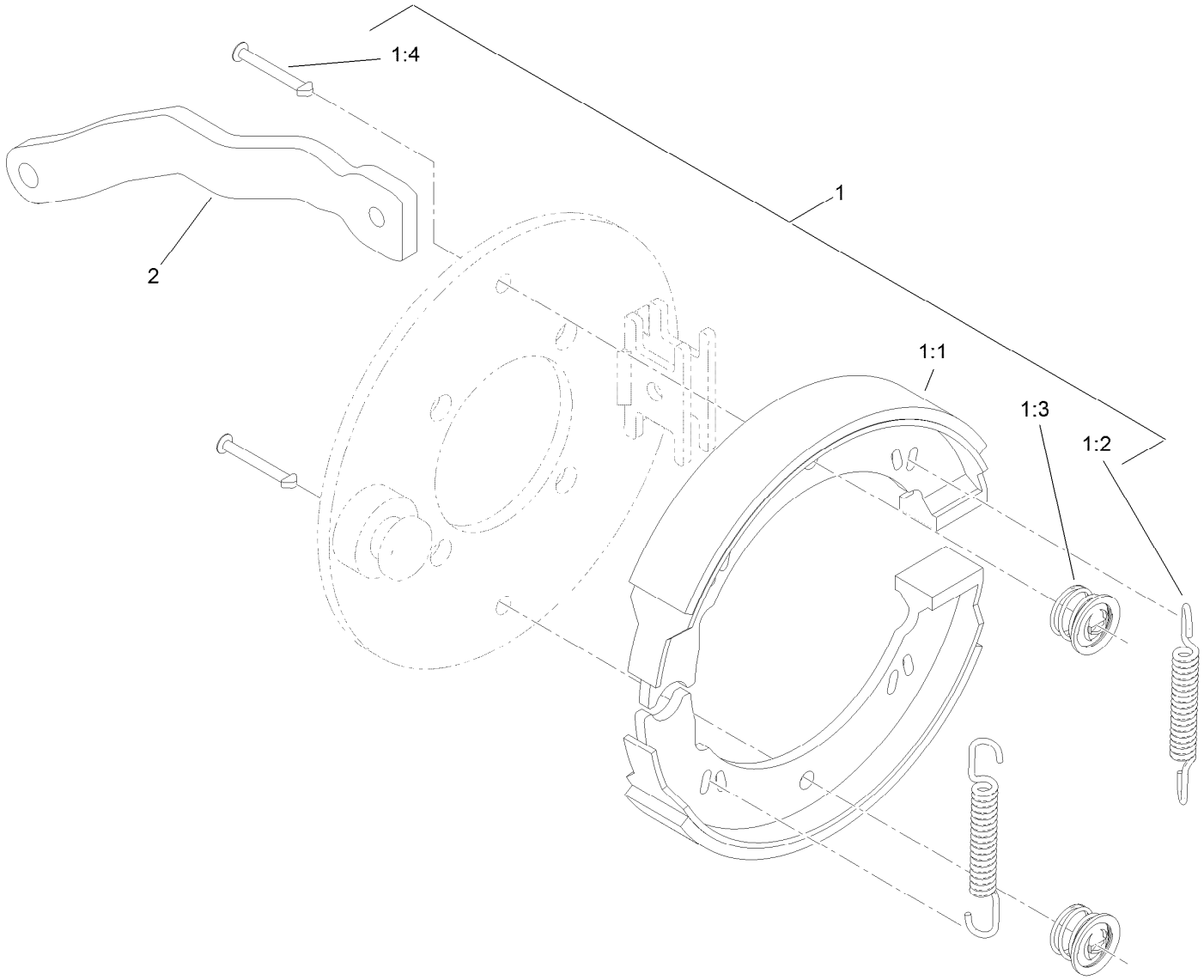

Left Hand Brake Assembly No. 115-9440

Ref.	*Part Number*	*Qty.*	*Description*
1	119-7136	1	Kit-Brake
1:1		2	Shoe-Brake ●
1:2		2	Spring ●
1:3		2	Clip ●
1:4		2	Pin-Retainer ●
2	115-2664	1	Lever-Brake, LH

● Not serviced separately

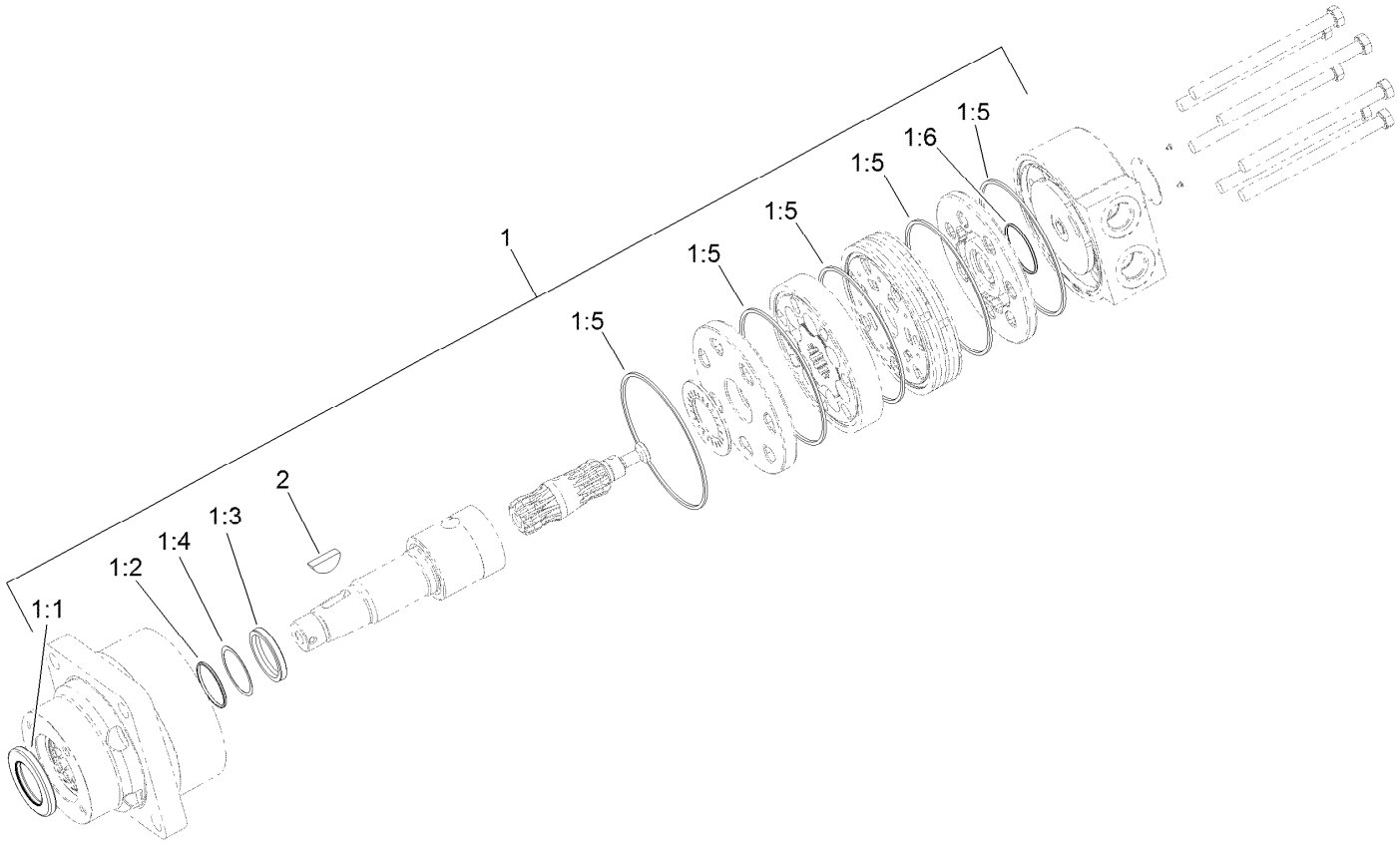

Right Hand Wheel Motor Assembly No. 117-4302

Ref.	*Part Number*	*Qty.*	*Description*
1	94-8178	1	Seal Kit
1:1		1	Seal-Dirt And Water ●
1:2		1	Backup-Ring ●
1:3		1	Seal-Shaft ●
1:4		1	Washer-Backup ●
1:5		5	Seal-Square, Ring (Inner) ●
1:6		1	Seal-Commutator ●
2	3257-42	1	Key-Woodruff

● Not serviced separately

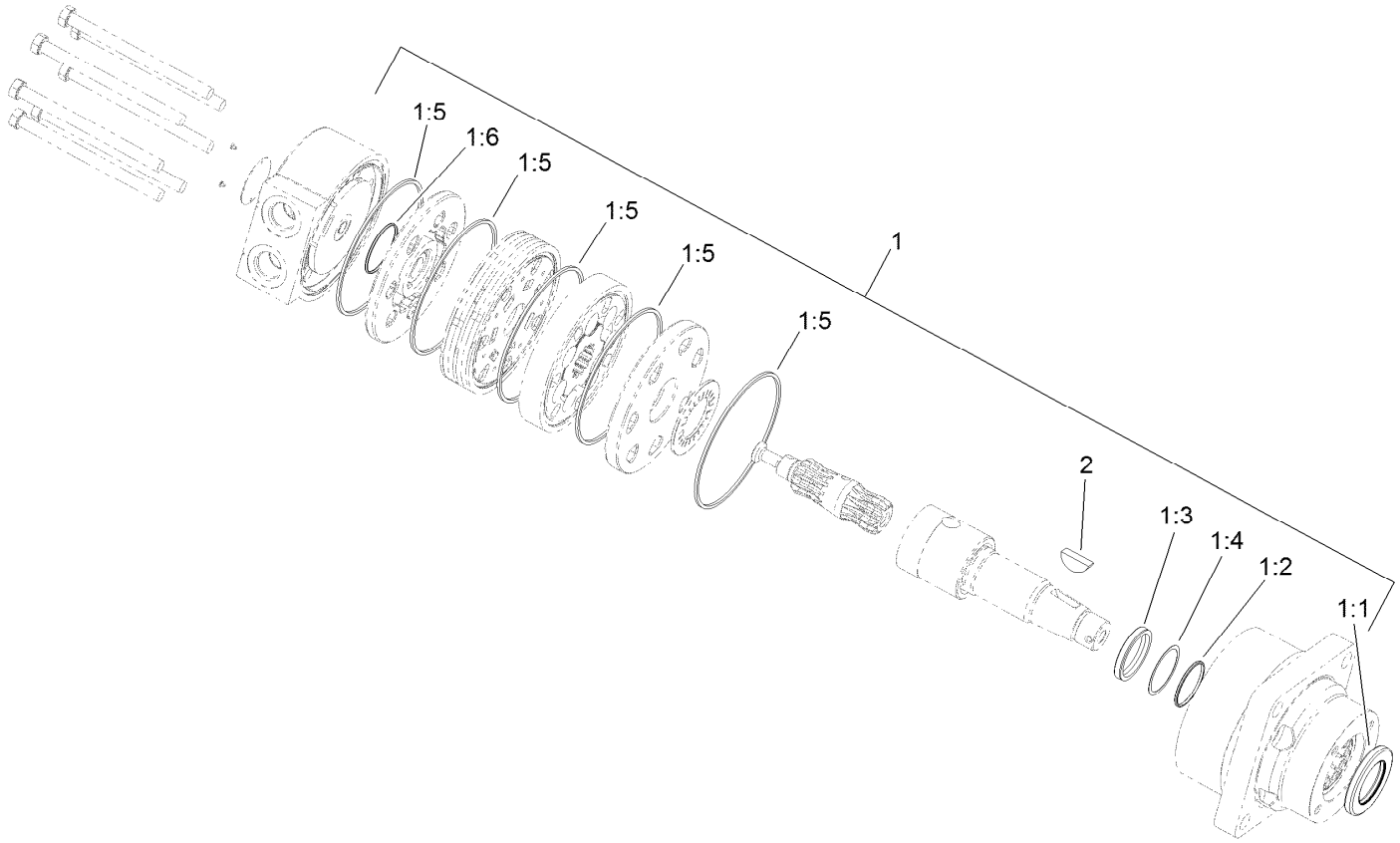

Left Hand Wheel Motor Assembly No. 117-4303

Ref.	*Part Number*	*Qty.*	*Description*
1	94-8178	1	Seal Kit
1:1		1	Seal-Dirt And Water ●
1:2		1	Backup-Ring ●
1:3		1	Seal-Shaft ●
1:4		1	Washer-Backup ●
1:5		5	Seal-Square, Ring (Inner) ●
1:6		1	Seal-Commutator ●
2	3257-42	1	Key-Woodruff

● Not serviced separately

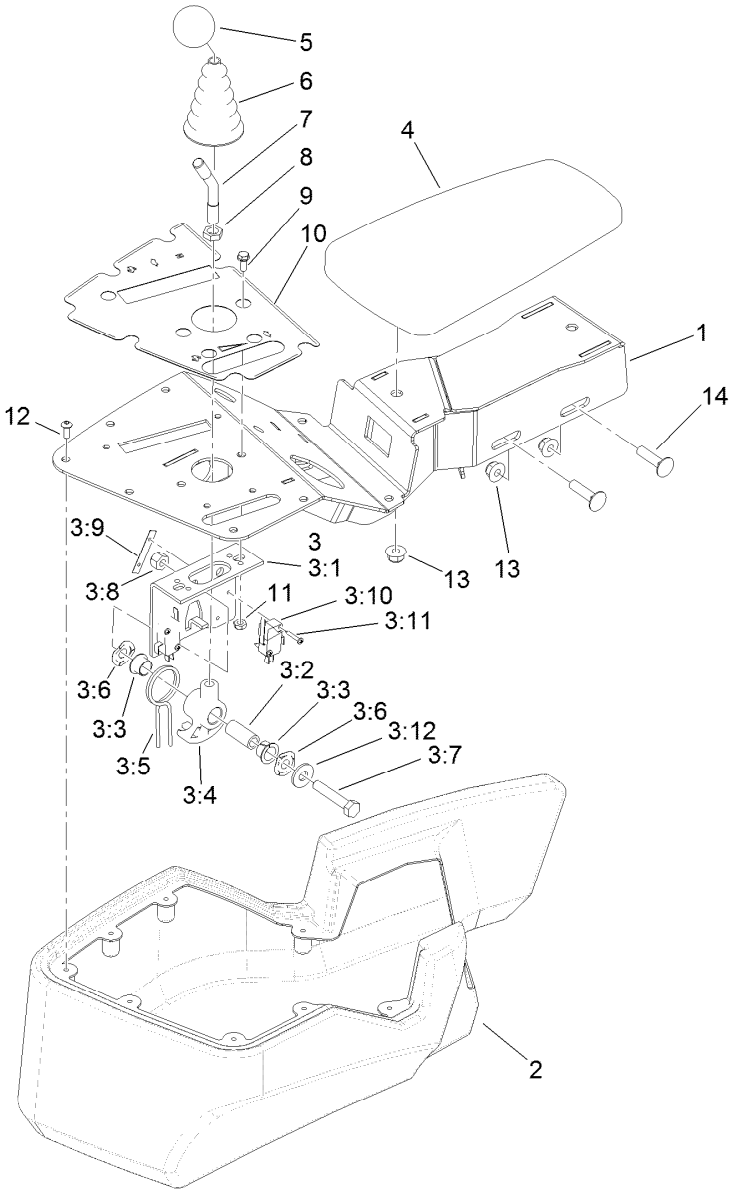

Console and Reel Control Assembly

Ref.	Part Number	Qty.	Description
1	120-2049-03	1	Console
2	121-5152	1	Cover-Console
3	106-4167	1	Joystick Bracket ASM
3:1	115-5357-03	1	Bracket-Joystick
3:2	106-4192	1	Spacer
3:3	93-5547	2	Bushing-Nylon
3:4	105-7507	1	Hub-Pivot, Joystick
3:5	105-8289	1	Spring-Torsion
3:6	106-4193	2	Washer-Finger, Spring
3:7	322-9	1	Screw-HH
3:8	3296-29	1	Nut-Lock, NI
3:9	3290-354	2	Nut-Speed
3:10	108-6496	2	Switch (W/Boot)

Ref.	Part Number	Qty.	Description
3:11	95-3003	4	Screw-PPHTF
3:12	3256-3	1	Washer-Flat
4	108-7602	1	Rest-Arm
5	120-9752	1	Knob-Round, Yellow
6	93-5961	1	Boot-Lever
7	121-6681	1	Stem-Joystick
8	3218-3	1	Nut-Jam
9	3290-321	2	Screw-HWH
10	121-5169	1	Decal-Console
11	3296-12	2	Nut-Lock, NI
12	115-9830	8	Screw-HSBH
13	104-8300	4	Nut-HF, NI
14	3230-3	2	Screw-CARR

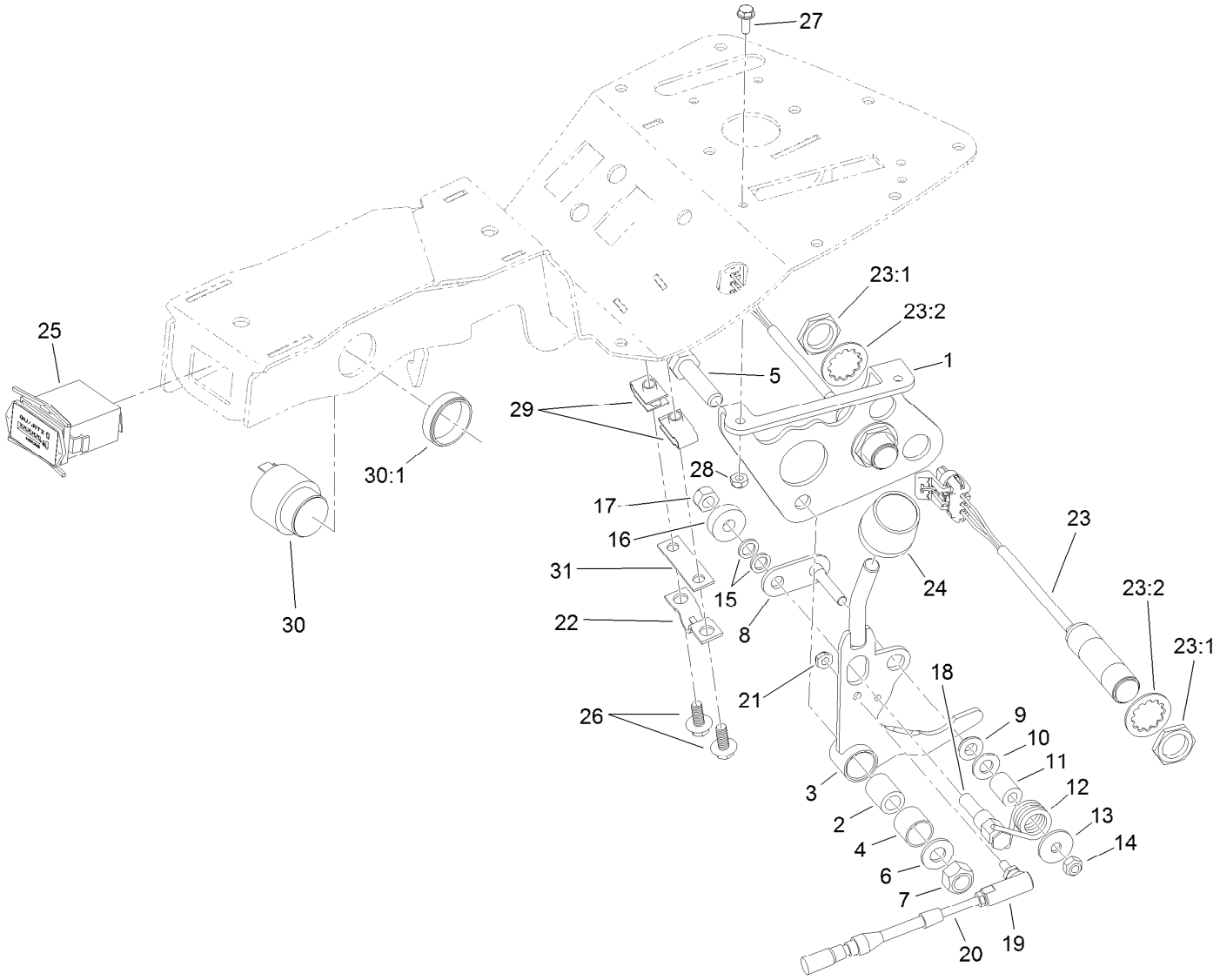

Traction Interface Control Assembly

Ref.	Part Number	Qty.	Description
1	115-9774-03	1	Bracket-Function, Lever
2	94-1378	1	Tube-Pivot, Handle
3	115-9772	1	Handle ASM
4	256-311	1	Bushing-Split
5	33115-040	1	Screw-HH
6	3256-24	1	Washer-Flat
7	33025-00	1	Nut-Lock, NI
8	120-3198	1	Roller-Pivot
9	94-9619	1	Bushing
10	3256-23	1	Washer-Plain
11	94-9618	1	Spacer-Spring
12	94-9620	1	Spring-Torsion
13	3256-67	1	Washer
14	33023-00	1	Nut-Lock
15	75-5470	2	Spacer-Bearing
16	251-259	1	Bearing-Ball
17	33024-00	1	Nut-Lock, NI

Ref.	Part Number	Qty.	Description
18	94-9617	1	Pin-Spring
19	2411-38	1	Joint-Ball
20	119-1653	1	Cable-Lock, Nuetral
21	3296-27	1	Nut-Lock, NI
22	93-2279	1	Clamp-Cable
23	115-5300	2	Proximity Switch ASM
23:1	117-3207	2	Nut-Hex
23:2	117-3208	2	Washer-Lock, Internal Tooth
24	120-9753	1	Knob-Cylindrical, Orange
25	1-513374	1	Meter-Hour
26	99-6810	2	Screw-HHF
27	3290-321	2	Screw-HWH
28	3296-12	2	Nut-Lock, NI
29	107069	2	Clip
30	80-9330	1	Audio Alarm ASM
30:1	104-5107	1	Nut-Plastic, Knurled
31	125-5653	1	Shim

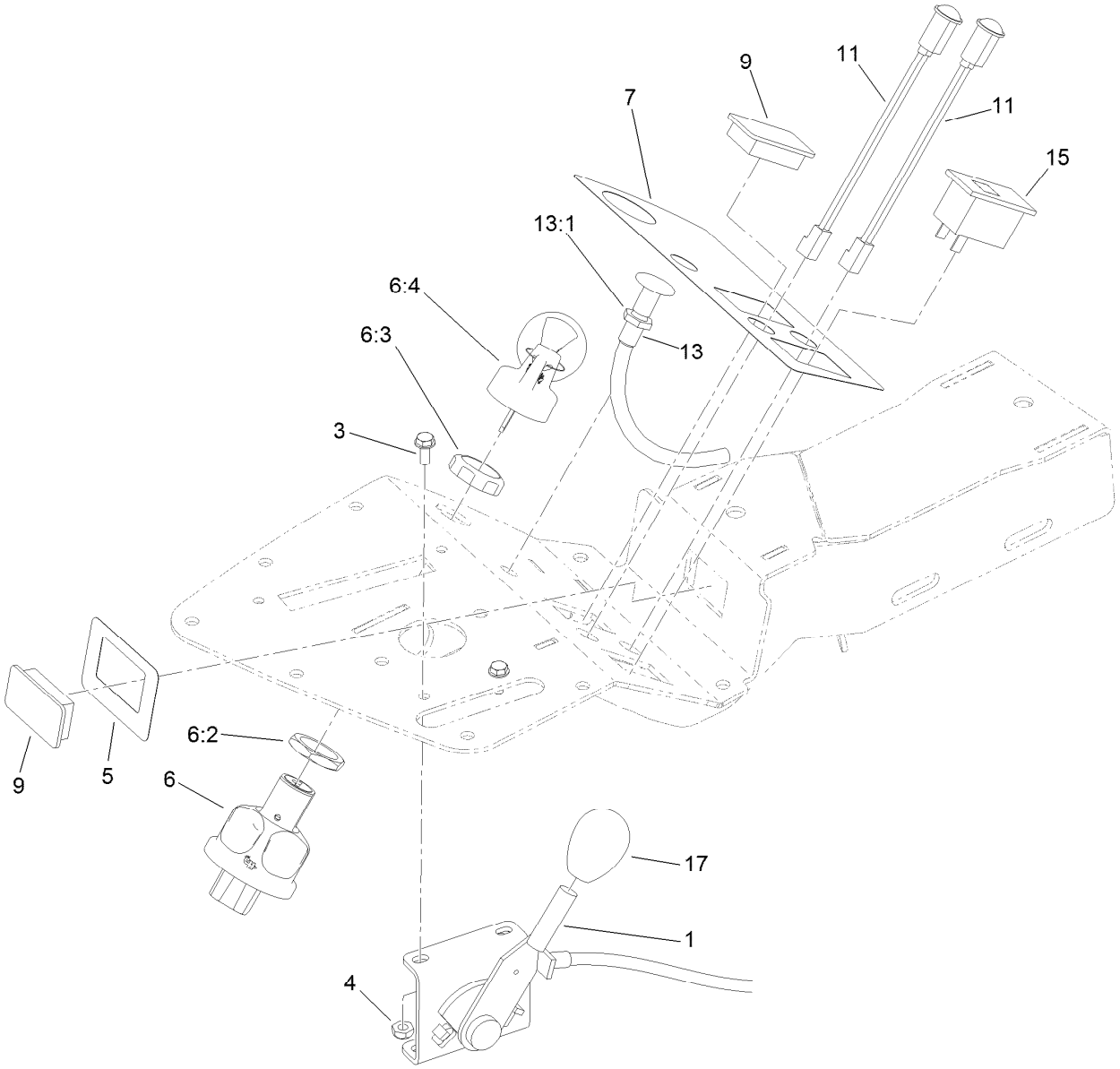

Ignition, Throttle and Choke Control Assembly

Ref.	*Part Number*	*Qty.*	*Description*
1	119-1652	1	Throttle
3	3290-321	2	Screw-HWH
4	3296-12	2	Nut-Lock, NI
5	121-5172	1	Decal-Lights, Console
6	121-5159	1	Ignition Switch ASM
6:2	121-5160	1	Nut-Hex
6:3	121-5161	1	Nut-Face
6:4	121-5162	1	Set-Key, Ignition
7	121-5170	1	Decal-Console, HYD
9	99-7420	2	Plug-Hole
11	95-7652	2	Light-Indicator
13	119-1651	1	Control-Choke
13:1	3220-3	1	Nut-HJ
15	99-7410	1	Indicator-Light, Low-Oil Pressure
17	120-9751	1	Knob-Oval, Black

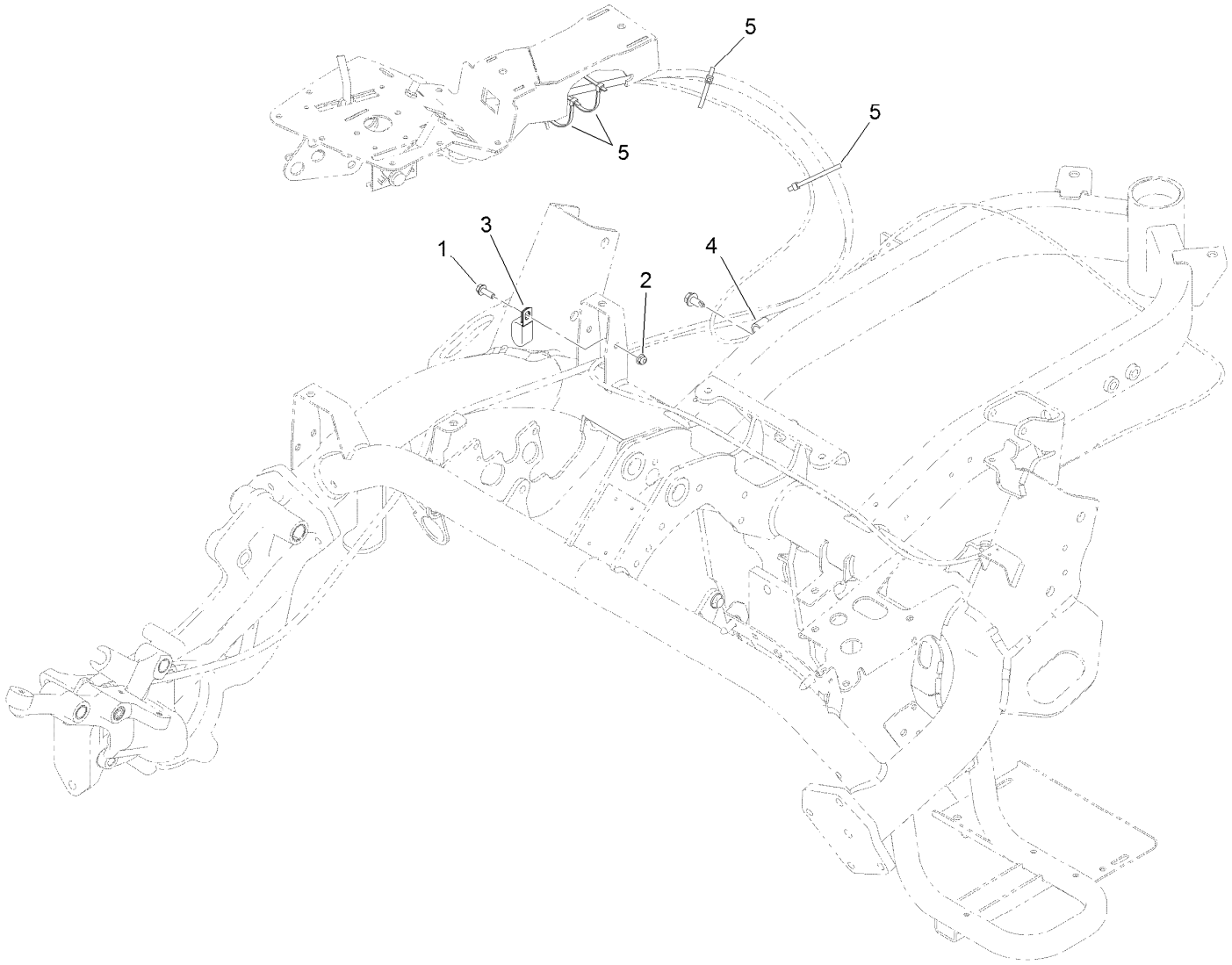

Console Cable Routing Assembly

Ref.	*Part Number*	*Qty.*	*Description*
1	115-5103	1	Screw-HHF
2	104-7201	1	Nut-HF, NI
3	119-8153	1	Clamp-R, Double Tube
4	92-6064	1	Clamp-R
5	3290-379	4	Tie-Cable

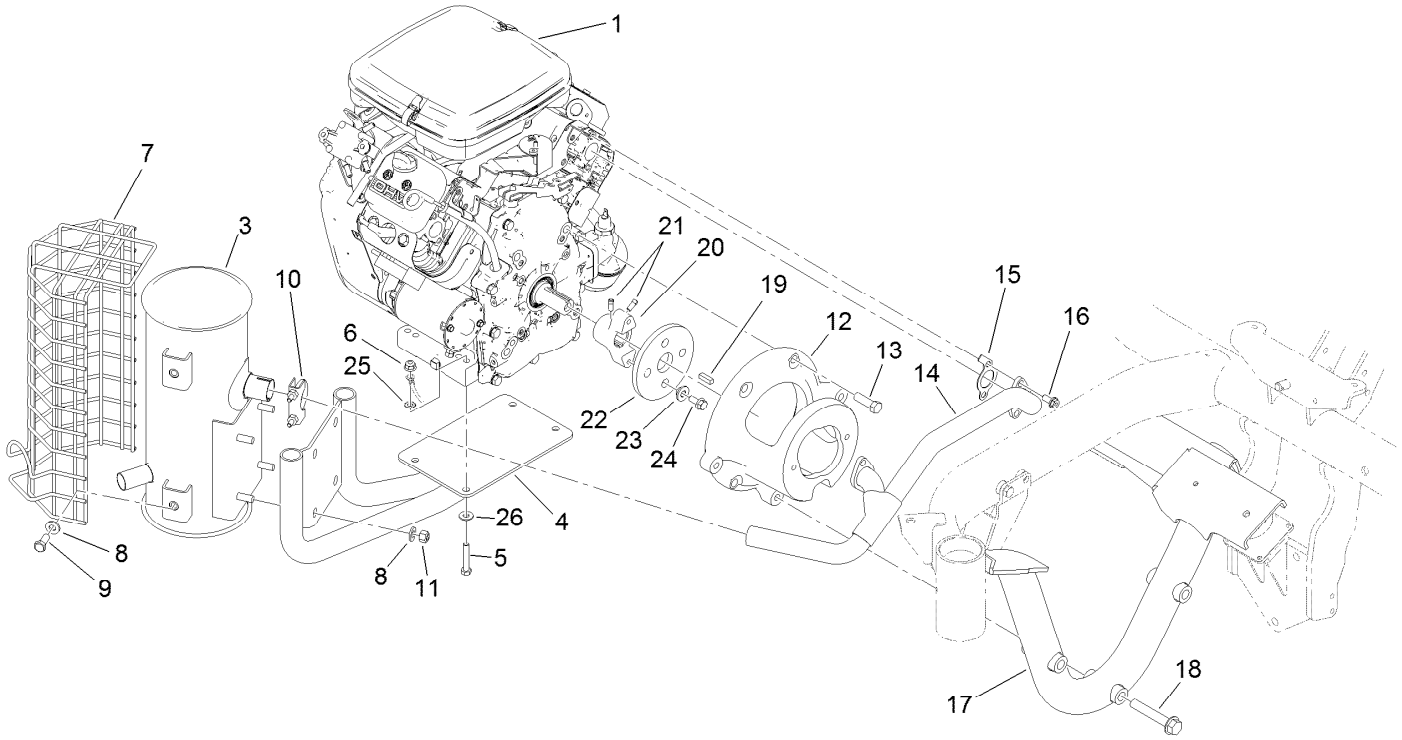

Engine and Exhaust Assembly

Ref.	Part Number	Qty.	Description
1	121-6662	1	Engine-Briggs & Stratton, 385447-0208-G2 ■
1:1	107-7817	1	Filter-Oil, Engine ●
3	110-4001	1	Muffler
4	117-4364-03	1	Mount-Muffler
5	322-10	4	Screw-HH
6	104-8300	4	Nut-HF, NI
7	112-0291	1	Shield-Muffler
8	100-4852	8	Washer-Hardened
9	323-5	4	Screw-HH
10	2112-11	1	Clamp-Muffler
11	32152-2	4	Nut-Lock, Cone
12	117-4363-03	1	Mount-Pump
13	324-32	4	Screw-HH
14	117-4379	1	Manifold-Exhaust
15	115-8154	2	Gasket-Manifold, Exhaust
16	94-5300	4	Screw-HHF
17	117-4442-03	1	Frame-Engine
18	3234-40	3	Screw-HF
19	10-7070	1	Key-Square
20	117-9278	1	Hub-Engine
21	3241-7	2	Screw-SQH
22	115-5129	1	Coupling-Rubber
23	125-9249	2	Spacer-Coupler, Rubber
24	98-9940	2	Screw-HHF
25	3255-8	1	Washer-Lock
26	87-8640	4	Washer-Flat

● Not illustrated

■ Obtain parts from www.briggsandstratton.com

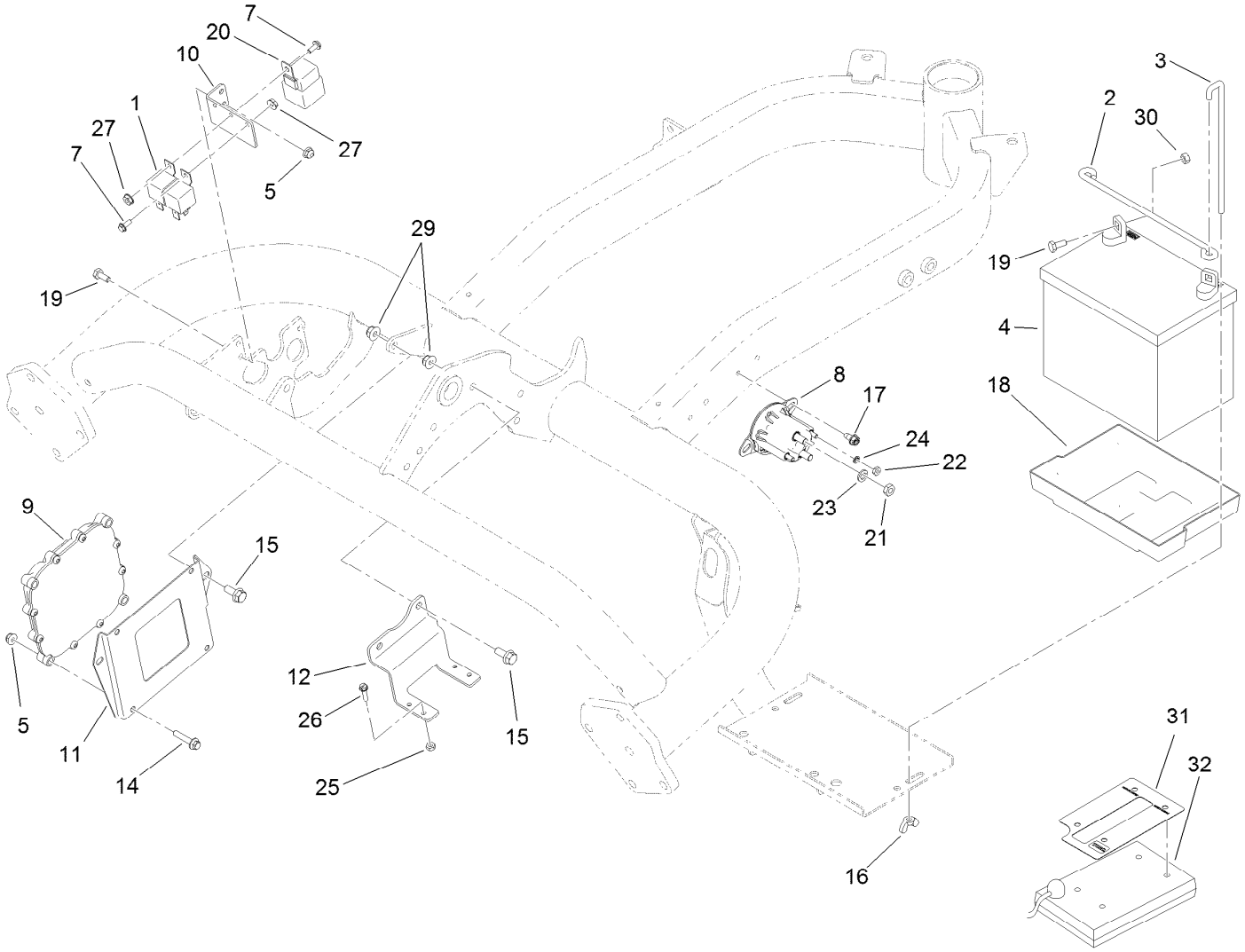

Battery Assembly

Ref.	Part Number	Qty.	Description
1	99-7435	2	Relay
2	100-6434	1	Rod-Hold Down, Battery
3	100-6435	2	Post-Battery
4	104-8162	1	Battery
5	104-7201	6	Nut-HF, NI
7	112-6349	2	Screw-HWH
8	114-3315	1	Solenoid
9	115-1900	1	Controller
10	119-2097-01	1	Bracket-Relay
11	119-2099-01	1	Plate-Mounting, Controller
12	119-2119-01	1	Bracket-Block, Fuse
14	3234-21	4	Screw-HHF
15	3234-47	4	Screw-HHF
16	32103-22	2	Nut-Wing
17	32104-17	2	Screw-HWH

Ref.	Part Number	Qty.	Description
18	106948	1	Tray-Battery
19	321-3	2	Screw-HH
20	99-7430	1	Relay-Mini
21	3220-2	2	Nut-Jam
22	3219-14	2	Nut-Hex
23	3253-4	2	Washer-Lock
24	3254-1	2	Washer-Lock, Int
25	3296-2	4	Nut-Lock, NI
26	32105-13	4	Screw-HWH
27	32149-8	2	Nut-Keps
29	104-8300	4	Nut-HF, NI
30	3217-5	2	Nut-Hex
31	115-8227	1	Decal-Controller
32	85-4750	1	Box-Display, Diagnostic

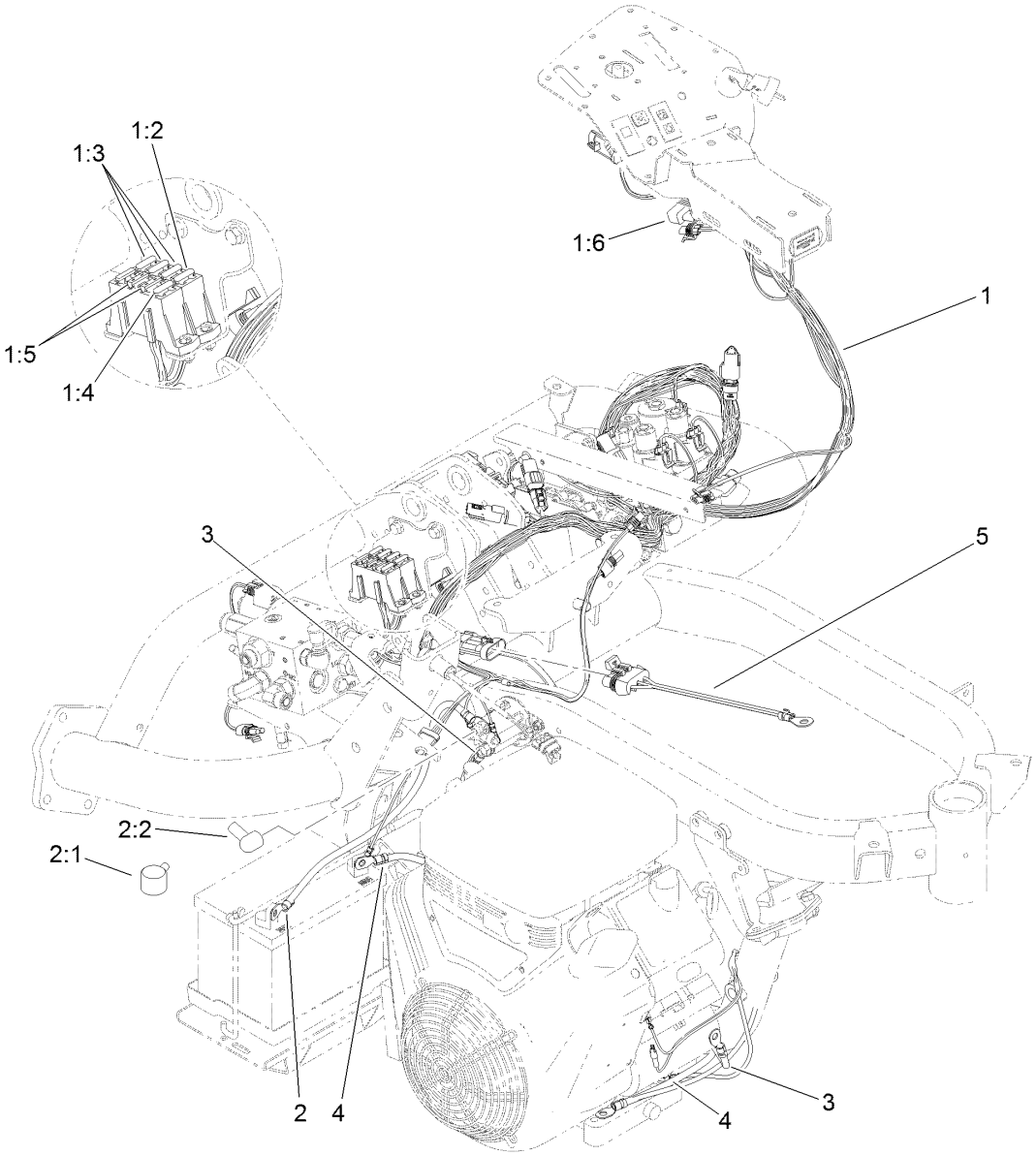

Wire Harness Assembly

Ref.	*Part Number*	*Qty.*	*Description*
1	120-3993	1	Harness-Wire
1:2	94-6710	1	Fuse-2 Amp
1:3	114241	3	Fuse-Blade, 7.5 Amp
1:4	218-578	1	Fuse-Blade, 10 Amp
1:5	109355	2	Fuse-Blade, 15 Amp
1:6	104-4022	1	Resistor-75 Ohm
2	109-7653	1	Positive Battery Cable ASM
2:1	109-2407	1	Insulator-Battery
2:2	1-543393	1	Insulator-Solenoid
3	119-1781	1	Cable-Battery, Positive
4	114-9748	1	Cable-Battery, Negative
5	99-3441	1	Harness-Wire, Fusible Link

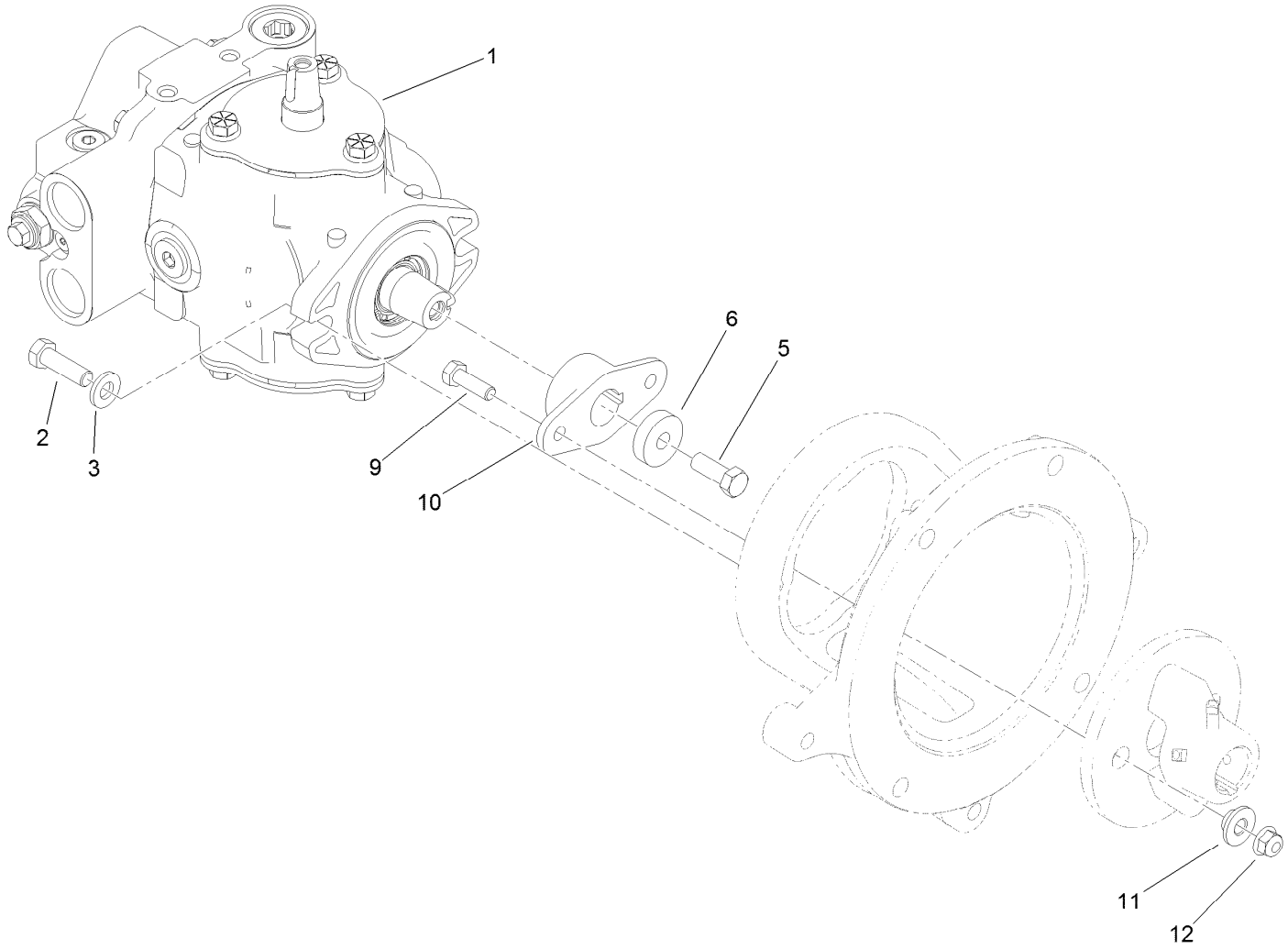

Pump Coupling Assembly

Ref.	*Part Number*	*Qty.*	*Description*
1	121-9558	1	HYD Pump ASM
2	323-7	2	Screw-HH
3	100-4852	2	Washer-Hardened
5	3211-4	1	Screw-HH
6	117-3657	1	Spacer
9	322-5	2	Screw-HH
10	119-4485	1	Hub-Pump
11	125-9249	2	Spacer-Coupler, Rubber
12	104-8300	2	Nut-HF, NI

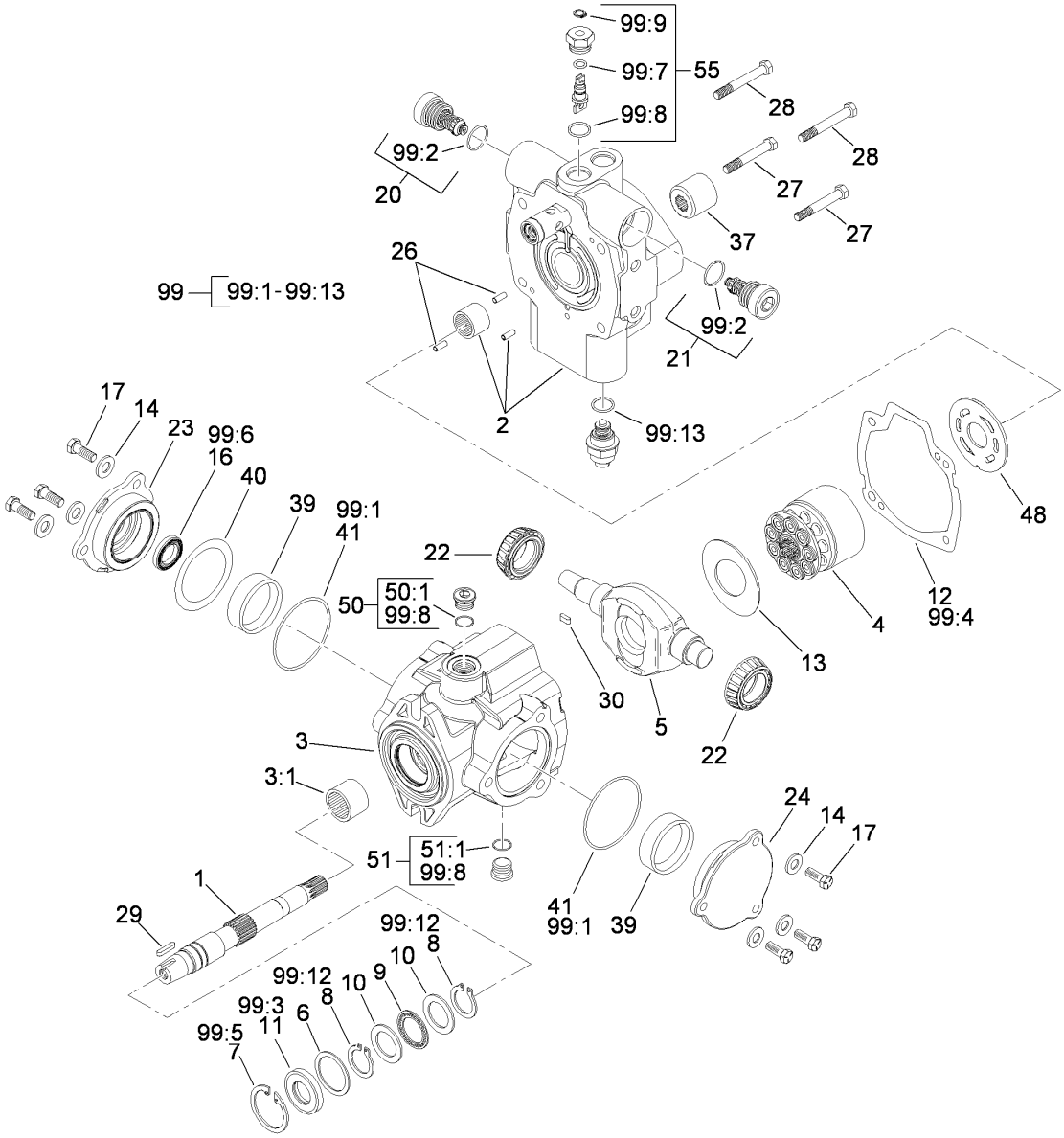

Hydraulic Pump Assembly No. 121-9558

Ref.	Part Number	Qty.	Description
1	119-7148	1	Shaft-Drive, Tapered
2	121-9574	1	Endcover ASM
3	100-3176	1	Housing ASM
3:1	94-6363	1	Bearing
4	76-6070	1	Rotating Kit
5	104-4888	1	Swashplate
6	33-3720	1	Washer
7	32151-13	1	Ring-Retaining
8	32151-29	2	Ring-Retaining
9	252-66	1	Bearing-Thrust
10	252-71	2	Washer-Thrust
11	104-4861	1	Seal-Shaft
12	33-4930	1	Gasket-Housing
13	98-4635	1	Insert-Plate, Cam
14	105-9762	6	Washer
16	76-6190	1	Seal-Shaft
17	98-4640	6	Screw-Cap
20	120-1989	1	Relief Valve ASM

Ref.	Part Number	Qty.	Description
21	120-1989	1	Relief Valve ASM
22	98-4639	2	Bearing-Cone
23	98-4645	1	Plate-Cover
24	98-4644	1	Plate-Cover
26	76-6150	2	Pin-Dowel
27	76-6160	2	Capscrew
28	76-6170	2	Capscrew
29	120-5751	1	Key
30	94-3646	1	Key
37	74-9040	1	Coupler
39	104-4046	2	Bearing-Cup
40	100-3182	1	Shim Kit
41	100-3179	2	O-Ring
48	100-3180	1	Plate-Valve
50	74-9280	1	Plug ASM
50:1		1	O-Ring ■
51	74-9280	1	Plug ASM
51:1		1	O-Ring ■

● Not illustrated

■ Not serviced separately

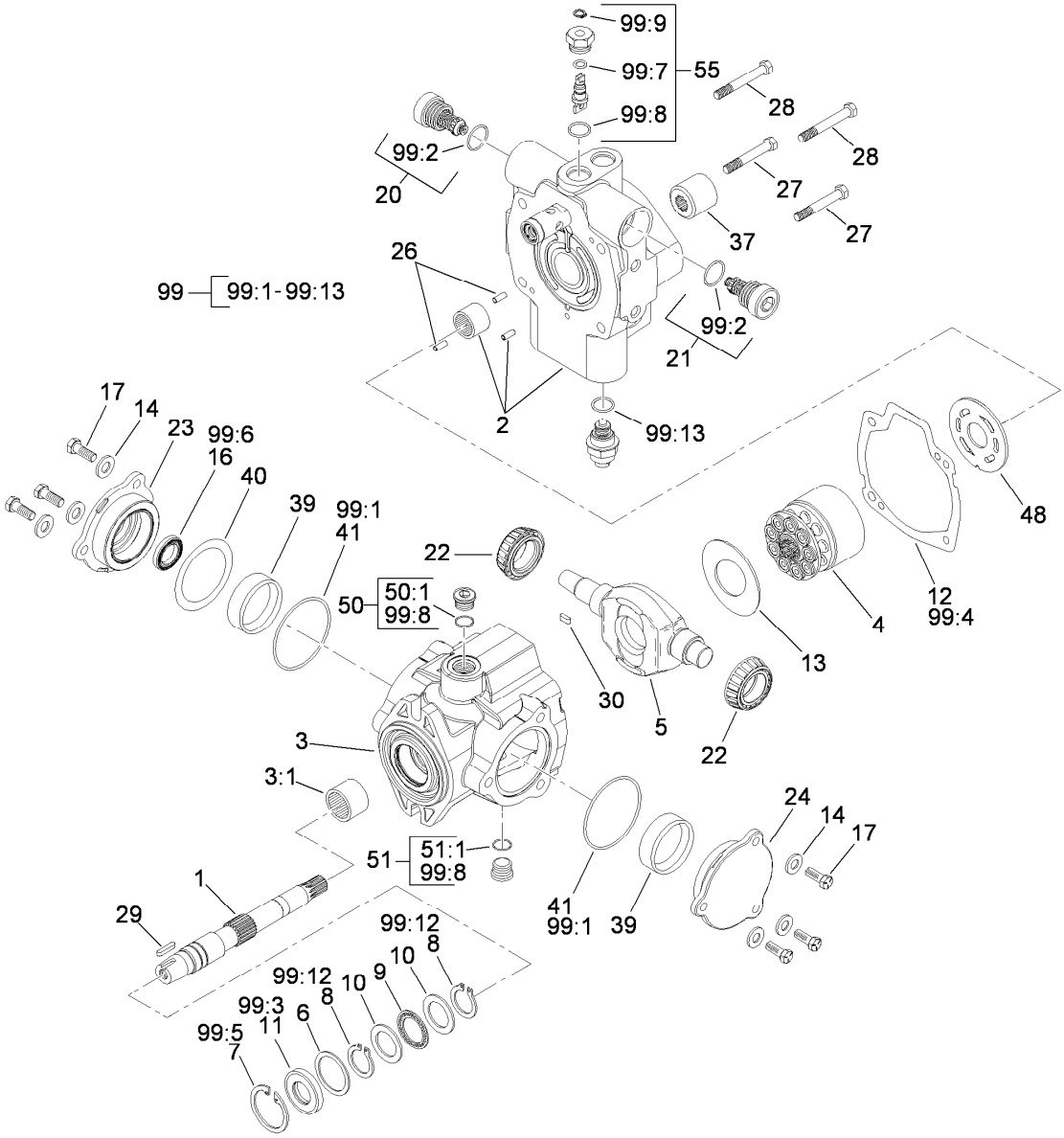

Hydraulic Pump Assembly No. 121-9558 (continued)

Ref.	Part Number	Qty.	Description
55	105-3811	1	Valve-Bypass
99	120-5754	1	Seal Kit
99:1		2	O-Ring ■
99:2		2	O-Ring ■
99:3		1	Seal-Shaft ■
99:4		1	Gasket ■
99:5		1	Ring-Retaining ■
99:6		1	Seal-Shaft ■
99:7		1	O-Ring ■

Ref.	Part Number	Qty.	Description
99:8		5	O-Ring ■
99:9		1	Ring-Retaining ■
99:10		1	O-Ring (Not Used For This Configuration) ● ■
99:11		1	O Ring-Molded (Not Used For This Configuration) ● ■
99:12		2	Ring-Retaining ■
99:13		1	O-Ring ■

● Not illustrated

■ Not serviced separately

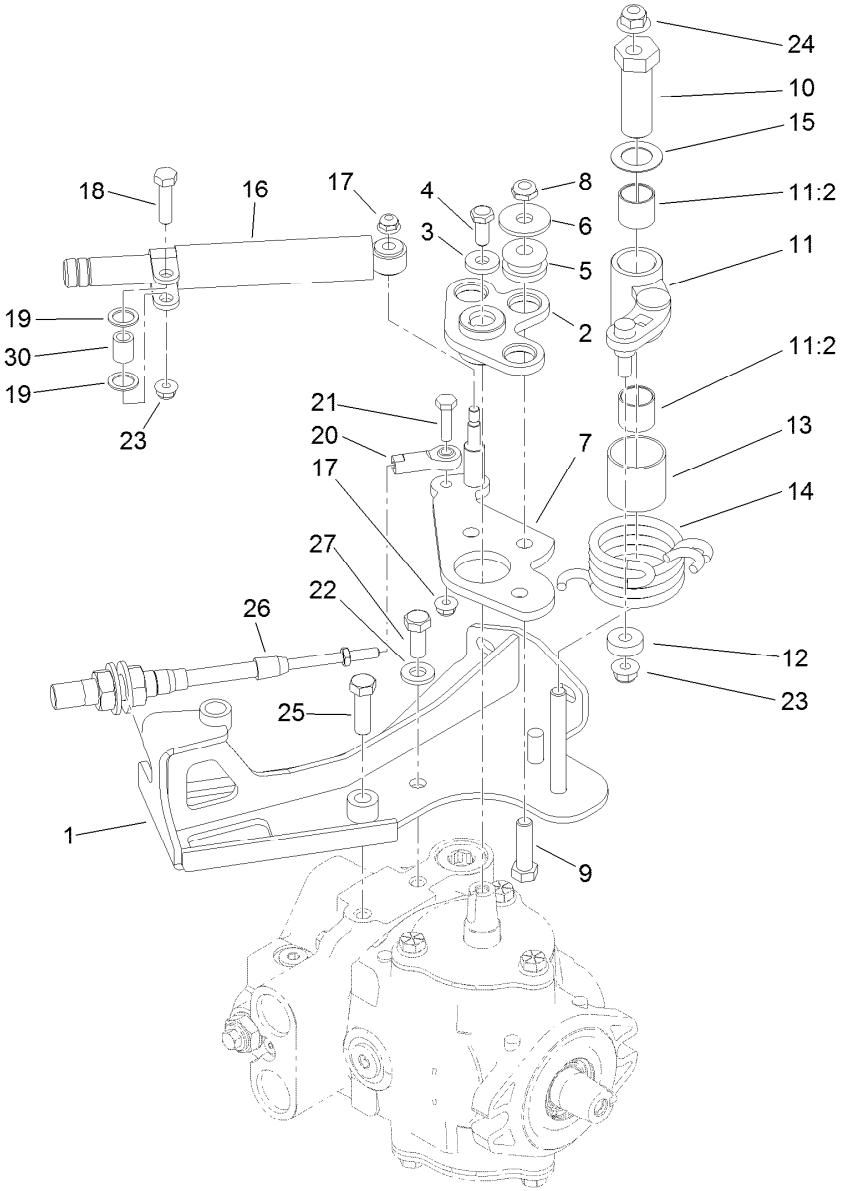

Neutral Centering Assembly

Ref.	Part Number	Qty.	Description
1	120-2017	1	Support-Cable
2	117-4466	1	Plate ASM
3	88-7200	1	Washer-Flat
4	3235-6	1	Screw-HH
5	63-9750	3	Mount
6	93-8806	3	Washer-Hardened
7	117-9061	1	Lever-Pump
8	3296-59	3	Nut-Lock, NI
9	323-29	3	Screw-HH
10	117-9046	1	Stud-Eccentric
11	117-9053	1	Neutral Arm ASM
11:2	94-9609	2	Bushing-Straight
12	251-259	1	Bearing-Ball
13	115-8158	1	Spacer-Spring
14	117-9047	1	Spring-Torsion

Ref.	Part Number	Qty.	Description
15	119-8199	1	Washer-Nylon
16	76-8870	1	Damper-Lever
17	104-7201	2	Nut-HF, NI
18	322-6	1	Screw-HH
19	94-8196	2	Washer-Nylon
20	2411-41	1	Rod End-Ball Joint
21	321-6	1	Screw-HH
22	100-4852	1	Washer-Hardened
23	104-8300	2	Nut-HF, NI
24	104-8301	1	Nut-HF, NI
25	323-7	1	Screw-HH
26	119-1735	1	Cable-Control, Traction
27	323-5	1	Screw-HH
30	94-8197	1	Tube-Pivot

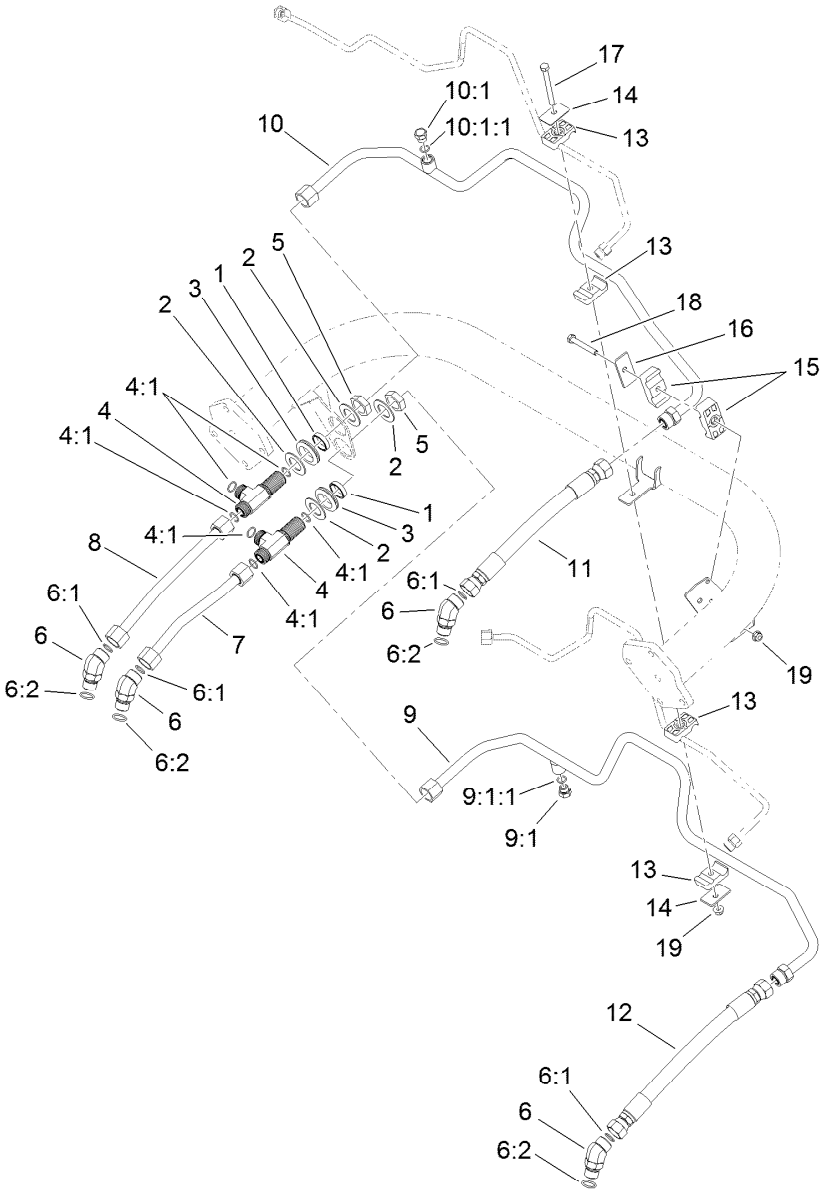

Traction Drive Hydraulic Line Assembly

Ref.	Part Number	Qty.	Description
1	125-1984	2	Spacer
2	69-9010	4	Washer
3	240-3	2	Grommet-Rubber
4	94-5350	2	Fitting-Tee
4:1	237-65	3	O-Ring
5	340-74	2	Nut-Lock, Bulkhead
6	340-14	4	Fitting-HYD, 45 DEG
6:1	237-65	1	O-Ring
6:2	237-80	1	O-Ring
7	119-2057	1	Tube-HYD
8	119-2058	1	Tube-HYD
9	119-2063	1	Tube-HYD
9:1	353-508	1	Plug-HH

Ref.	Part Number	Qty.	Description
9:1:1	237-42	1	O-Ring
10	119-2064	1	HYD Tube ASM
10:1	353-508	1	Plug-HH
10:1:1	237-42	1	O-Ring
11	115-9484	1	Hose-HYD
12	115-9485	1	Hose-HYD
13	56-7970	4	Clamp-Tube
14	69-9760	2	Plate-Cover
15	119-8173	2	Clamp-Tube
16	69-9761	1	Plate-Cover
17	322-20	1	Screw-HH
18	322-12	1	Screw-HH
19	104-8300	2	Nut-HF, NI

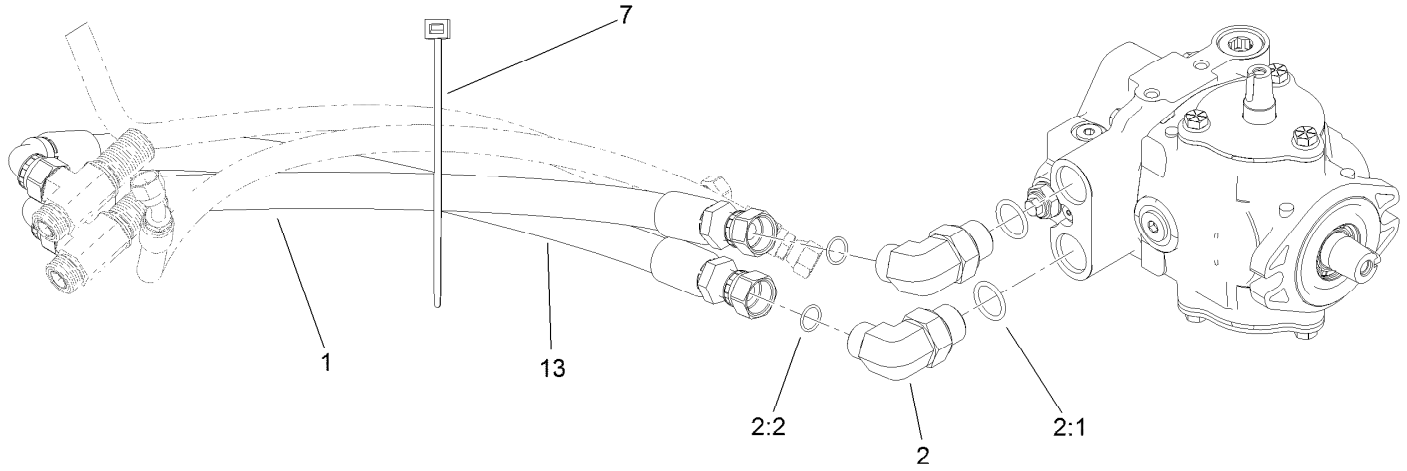

Traction Drive Hose Routing Assembly

Ref.	*Part Number*	*Qty.*	*Description*
1	119-2060	1	Hose-HYD
2	340-139	2	Fitting-Elbow 90
2:1	237-81	1	O-Ring
2:2	237-65	1	O-Ring
7	3290-378	1	Tie-Cable
13	120-1988	1	Hose-HYD

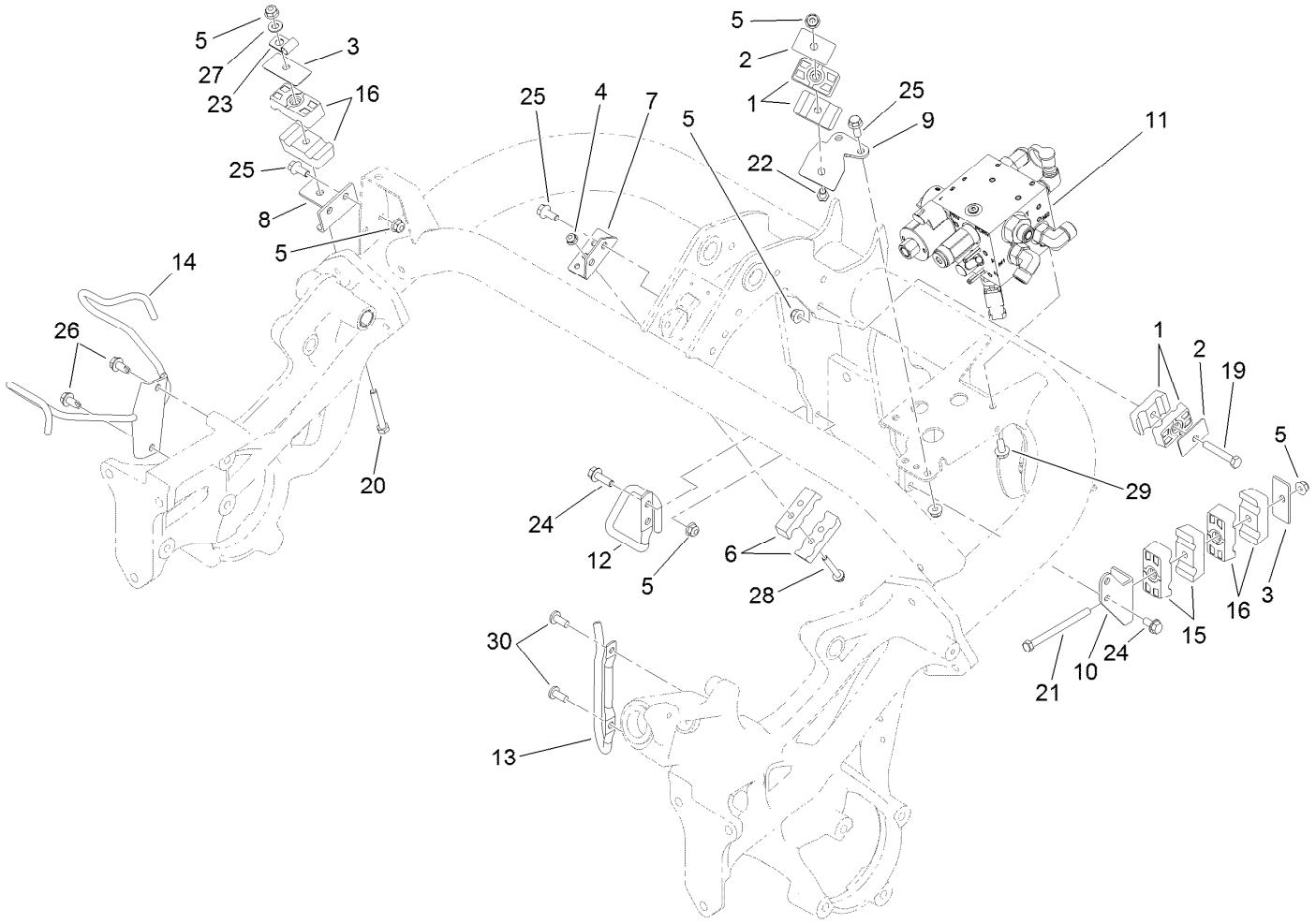

Hydraulic Mow Assembly

Ref.	Part Number	Qty.	Description
1	56-7972	4	Clamp-Tube
2	69-9760	2	Plate-Cover
3	69-9761	2	Plate-Cover
4	104-7201	2	Nut-HF, NI
5	104-8300	14	Nut-HF, NI
6	119-2082	2	Clamp-Tube
7	119-2091	1	Bracket-Tube
8	119-2095	1	Bracket-Tube
9	119-2106	1	Bracket-Clamp
10	119-4493	1	Bracket-Support, Tube
11		1	Mow Manifold ASM ●
12	121-6671	1	Wireform Hose Support
13	121-6667	1	Wireform-Hose, HYD
14	119-8109-03	1	Bracket-Hose
15	119-8156	2	Clamp-Tube
16	119-8168	4	Clamp-Tube
19	322-10	1	Screw-HH
20	322-12	1	Screw-HH
21	322-19	1	Screw-HH
22	322-21	1	Screw-HH
23	2412-113	1	Clamp-R
24	3234-29	4	Screw-HHF
25	3234-47	6	Screw-HHF
26	32104-32	2	Screw-HWH
27	3256-23	1	Washer-Plain
28	32105-18	2	Screw-HHF
29	3234-7	2	Screw-HHF
30	32122-14	2	Screw-PPH

● Not serviced separately

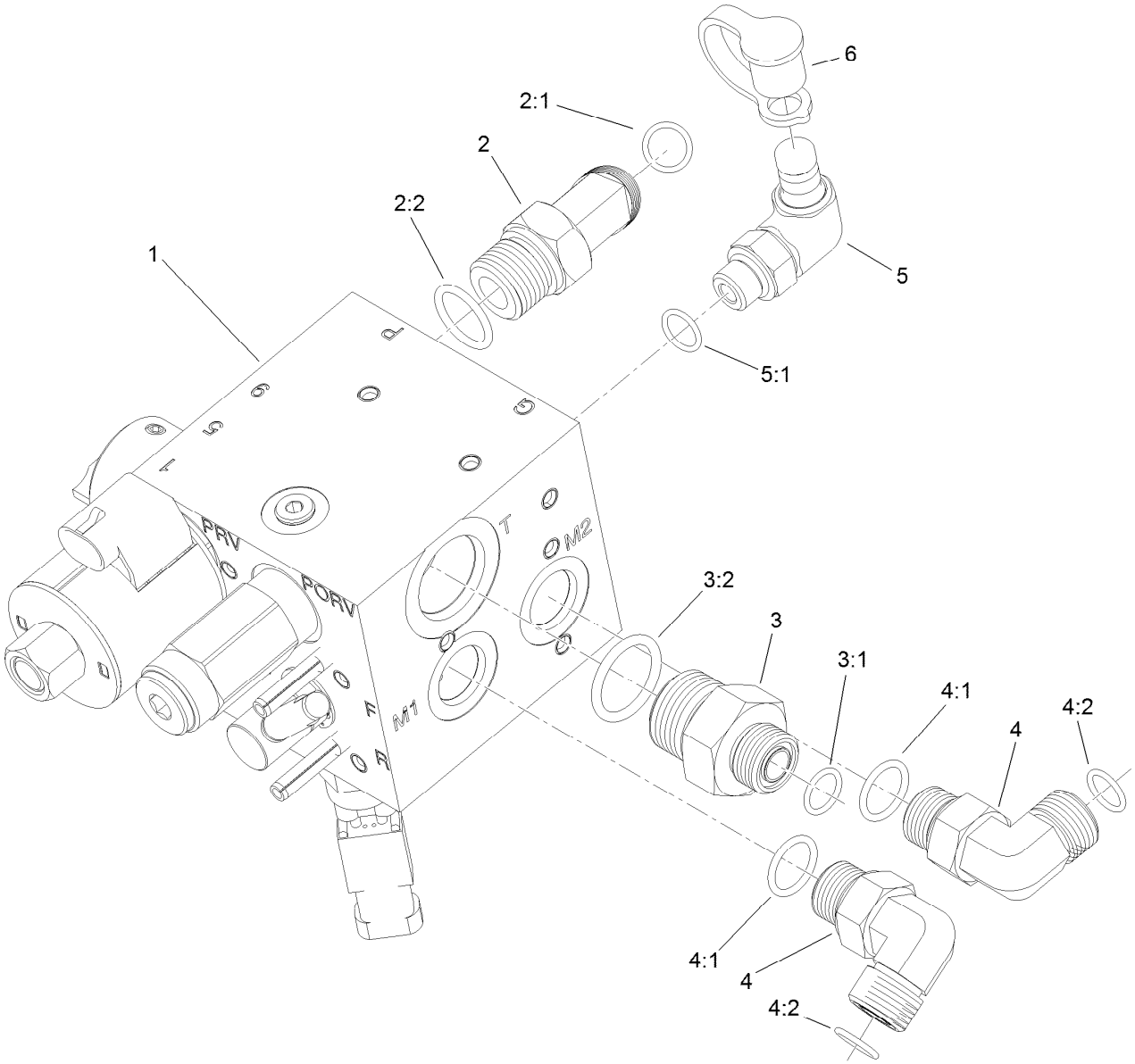

Hydraulic Mow Manifold Assembly

Ref.	*Part Number*	*Qty.*	*Description*
1	117-9858	1	Manfold-HYD, Mow (Backlap)
2	340-89	1	Fitting-HYD, 45 DEG
2:1	237-30	1	O-Ring
2:2	237-80	1	O-Ring
3	100-4240	1	Fitting-STR
3:1	237-30	1	O-Ring
3:2	237-81	1	O-Ring
4	340-98	2	Fitting-Elbow, 90 DEG
4:1	237-79	1	O-Ring
4:2	237-30	1	O-Ring
5	115-9147	1	Fitting-Elbow, 90 DEG
5:1	237-78	1	O-Ring
6	354-79	1	Cap-Dust

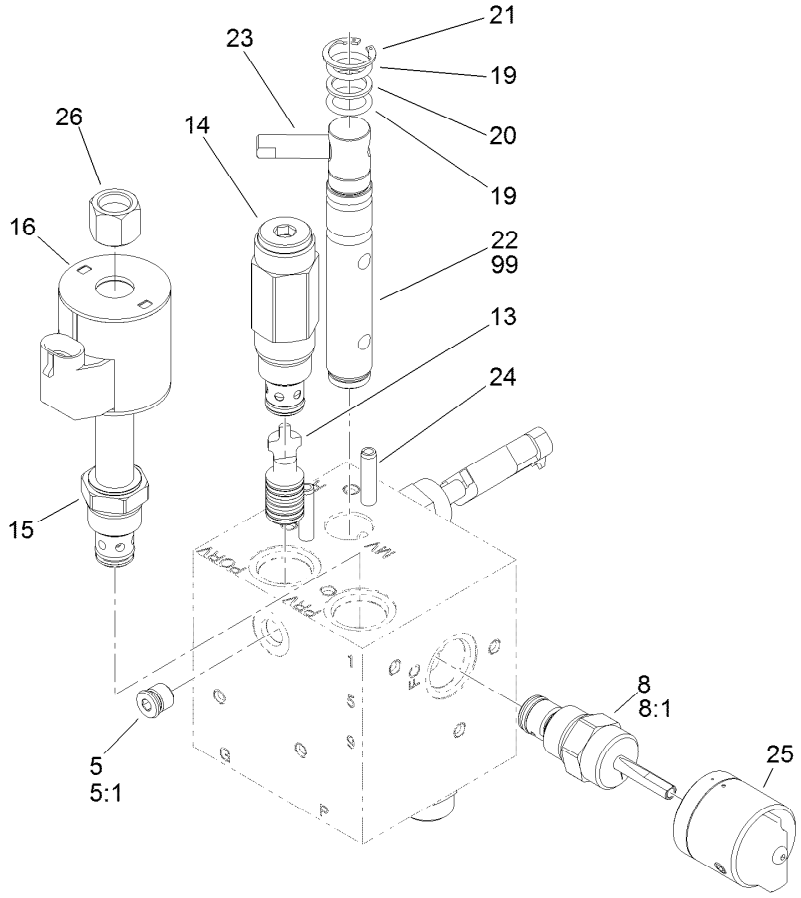

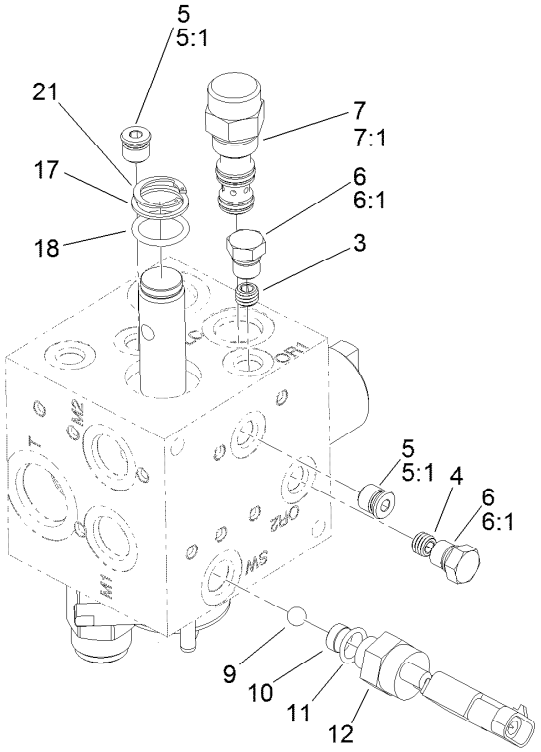

Hydraulic Mow Manifold Assembly No. 117-9858

Ref.	Part Number	Qty.	Description
3	120-5761	1	Orifice (.020)
4	112-9202	1	Orifice-Flow, Control (.060)
5	106-1025	3	Plug-HYD
5:1	237-78	1	O-Ring
6	117-0115	2	Plug
6:1	237-78	1	O-Ring
7	120-5762	1	Element-Logic
7:1	110-8773	1	Seal Kit
8	110-8769	1	Valve-Control, Manual Flow
8:1	110-2633	1	Seal Kit ●
9	117-4605	1	Ball-SS
10	119-7145	1	Shim-SS
11	110-8757	1	O-Ring
12	72-4320	1	Switch-Ball
13	119-7146	1	Piston-Pilot (With Seals)

Ref.	Part Number	Qty.	Description
14	119-7147	1	Valve-Relief
15	110-8799	1	Valve-Relief, Proportional
16	110-6344	1	Coil-12V, DC
17	106-8139	1	Ring-Back Up
18	117-4607	1	O-Ring
19	117-4606	2	O-Ring
20	112-6534	1	Ring-Back Up
21	112-6532	2	Ring-Retaining
22	119-7141	1	Spool
23	110-8758	1	Handle-Spool
24	112-6531	2	Pin-Spring
25	119-7140	1	Knob
26	130-8180	1	Nut-Coil (9/16-24 Unef-2B)
99	119-7142	1	Kit-Seal, Spool

● Not illustrated

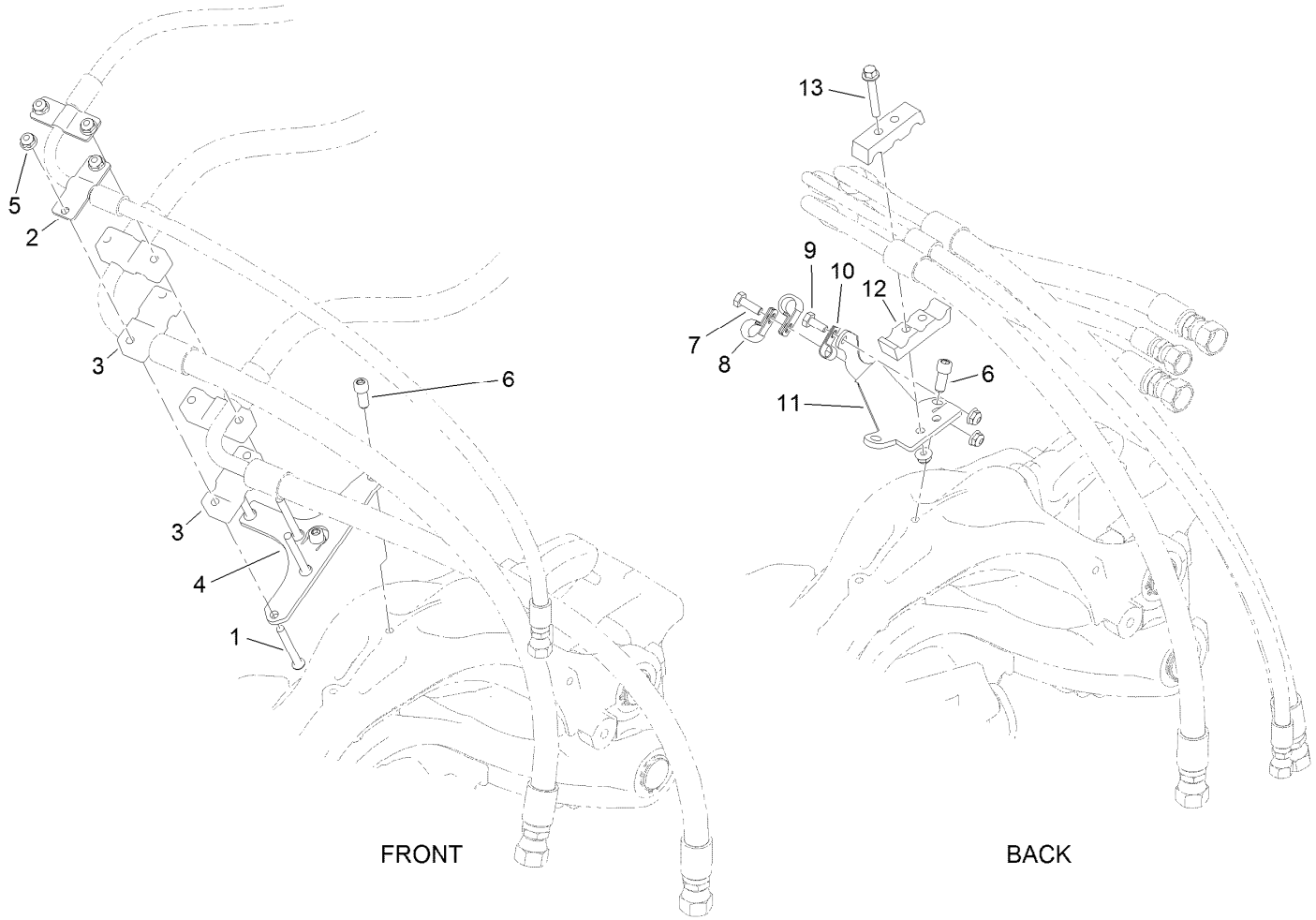

Hydraulic Mow Clamp Assembly

Ref.	Part Number	Qty.	Description
1	120-2011	8	Screw-HSBH
2	119-8142	4	Strap
3	119-8141	8	Clamp-Tube
4	119-8143-03	2	Bracket-Clamp, Hose
5	104-7201	12	Nut-HF, NI
6	100-2401	6	Screw-HSH
7	321-4	1	Screw-HH
8	2412-73	2	Clamp-R
9	321-3	1	Screw-HH
10	2412-89	1	Clamp-R
11	119-8172-03	1	Bracket-Hose
12	119-2082	2	Clamp-Tube
13	32105-18	2	Screw-HHF

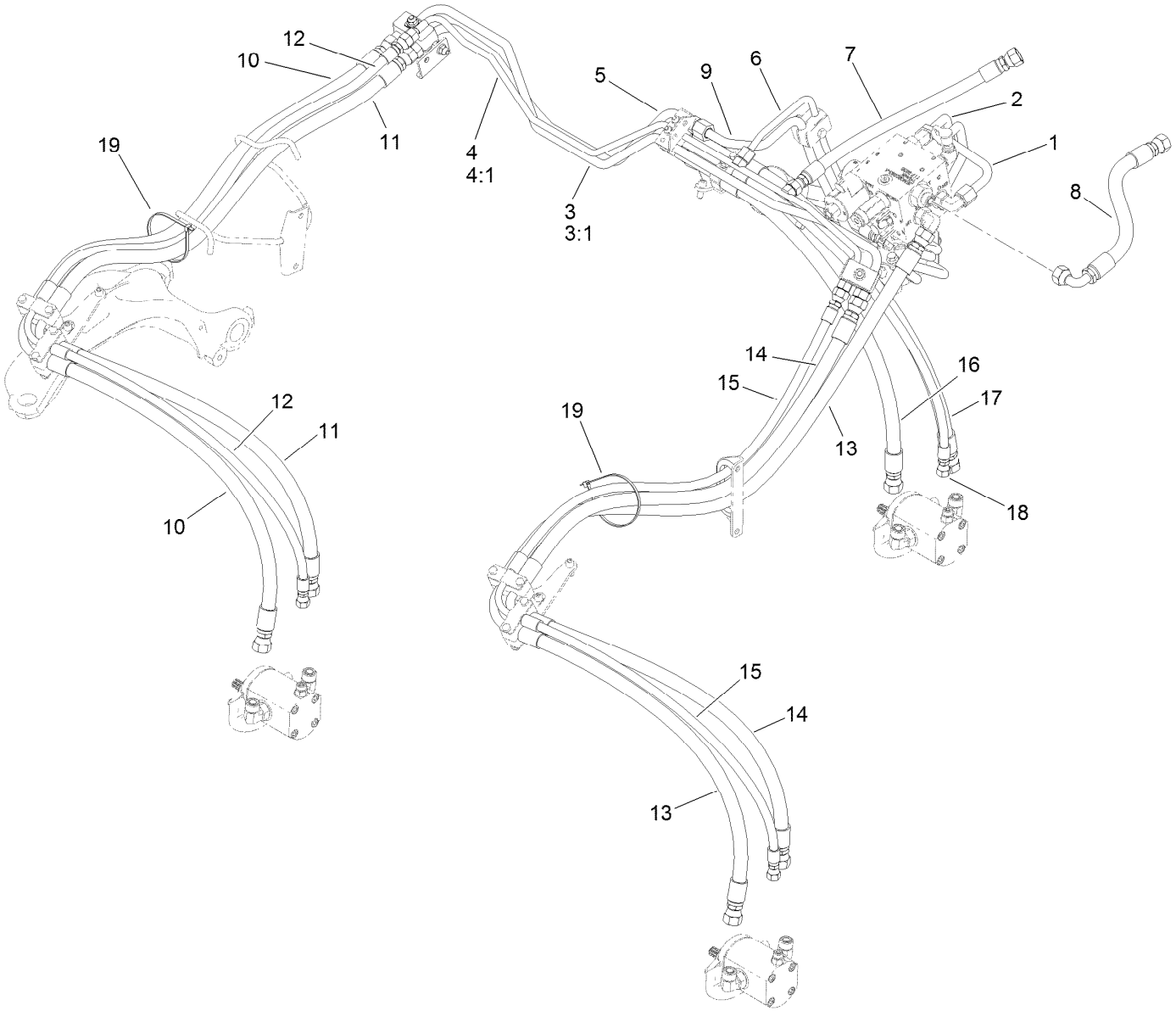

Hydraulic Mow
Hose Routing Assembly

Ref.	Part Number	Qty.	Description
1	117-9347	1	HYD Tube ASM
2	119-2073	1	HYD Tube ASM
3	119-2078	1	HYD Tube ASM
3:1	237-30	2	O-Ring
4	119-2079	1	HYD Tube ASM
4:1	237-22	4	O-Ring
5	119-2084	1	HYD Tube ASM
6	119-2085	1	HYD Tube ASM
7	119-2089	1	Hose-HYD (Case To Tank)
8	119-8106	1	Hose-HYD (Mow Block/Tank)
9	119-8122	1	HYD Tube ASM

Ref.	Part Number	Qty.	Description
10	119-8145	1	Hose-HYD (Pressure No. 3)
11	119-8146	1	Hose-HYD (Return No. 3)
12	119-8147	1	Hose-HYD (Case No. 3)
13	119-8157	1	Hose-HYD (Pressure No. 2)
14	119-8158	1	Hose-HYD (Return No. 2)
15	119-8159	1	HYD Hose ASM (Case No. 2)
16	119-8160	1	Hose-HYD (Pressure No. 1)
17	119-8161	1	Hose-HYD (Return No. 1)
18	119-8162	1	Hose-HYD (Case No. 1)
19	3290-379	2	Tie-Cable

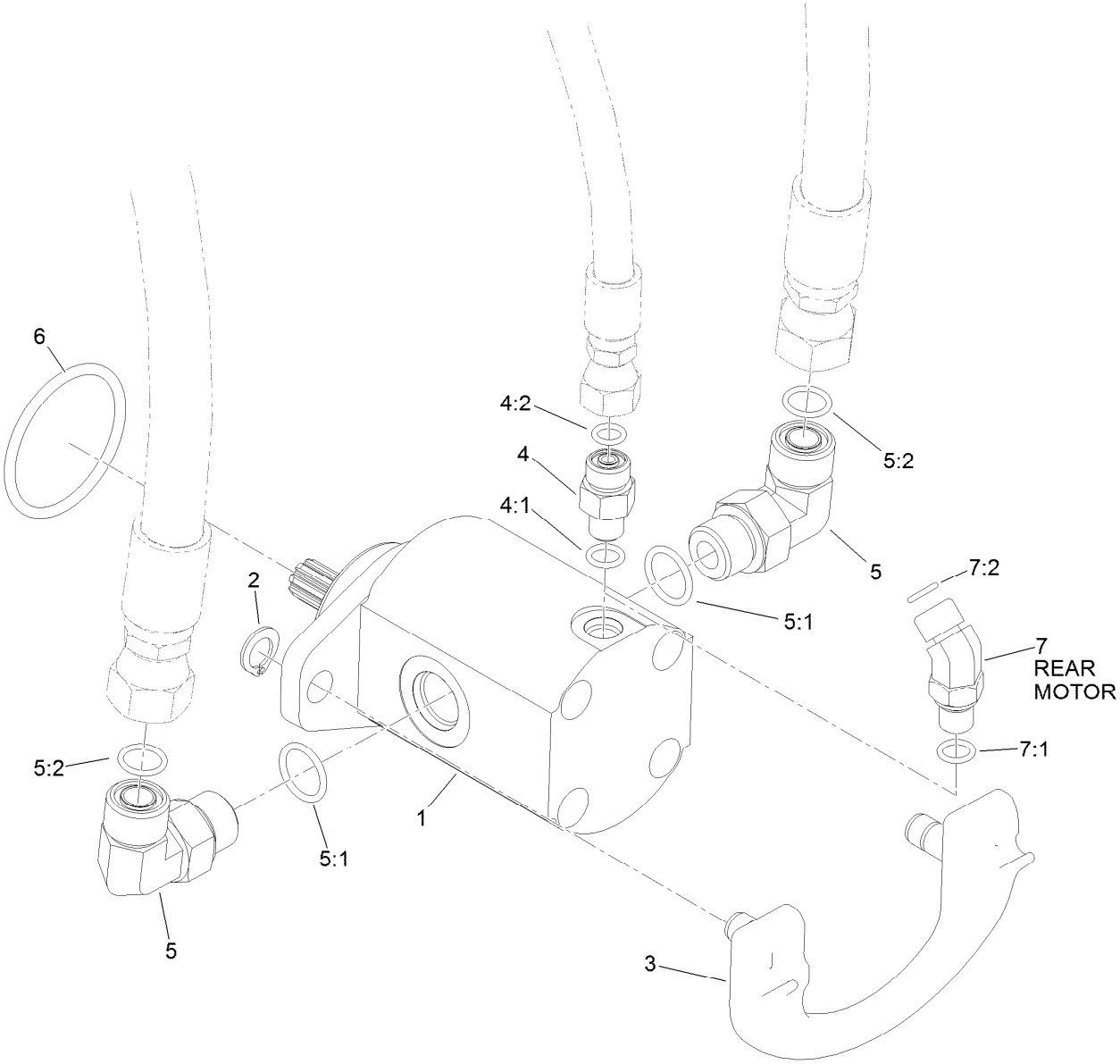

Hydraulic Mow Reel Motor Assembly

Ref.	*Part Number*	*Qty.*	*Description*
1	115-3321	3	HYD Reel Motor ASM
2	115-5206	6	Ring-Retaining
3	115-5389	3	Cam-Mount, Motor
4	340-92	2	Fitting-Straight
4:1	237-78	1	O-Ring
4:2	237-21	1	O-Ring
5	340-98	6	Fitting-Elbow, 90 DEG
5:1	237-79	1	O-Ring
5:2	237-30	1	O-Ring
6	115-3298	3	O-Ring
7	340-103	1	Fitting-HYD, 45 DEG
7:1	237-78	1	O-Ring
7:2	237-21	1	O-Ring

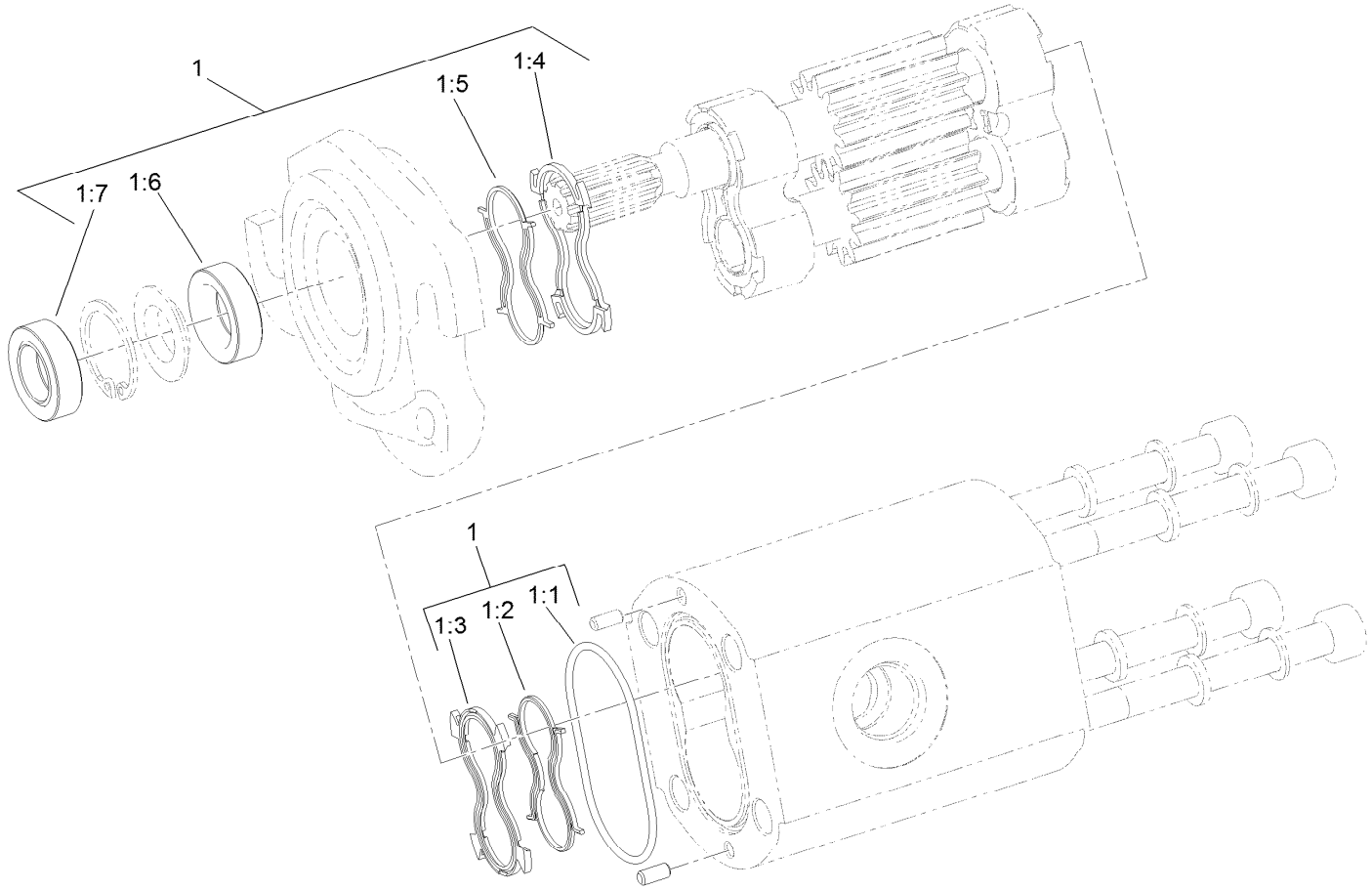

Hydraulic Reel Motor Assembly No. 115-3321

Ref.	*Part Number*	*Qty.*	*Description*
1	119-7113	1	Seal Kit
1:1		1	O-Ring Housing ●
1:2		1	Seal-Anti Extrusion ●
1:3		1	Seal-Plate, Balancing ●
1:4		1	Seal-Plate, Balancing ●
1:5		1	Seal-Anti Extrusion ●
1:6		1	Seal-Shaft (Inboard) ●
1:7		1	Seal-Shaft (Outboard) ●

● Not serviced separately

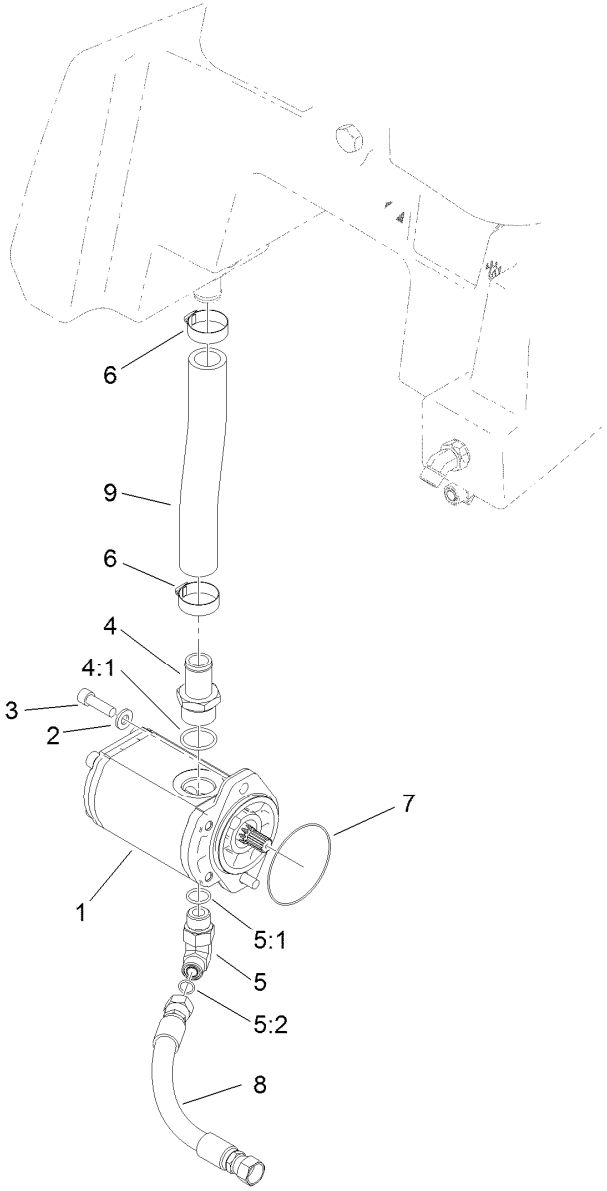

Hydraulic Mow Gear Pump Assembly

Ref.	*Part Number*	*Qty.*	*Description*
1	114-9956	1	HYD Gear Pump ASM
2	100-4852	2	Washer-Hardened
3	3274-1	2	Screw-HSH
4	354-78	1	Fitting-STR
4:1	237-146	1	O-Ring
5	340-105	1	Fitting-Elbow, 90 DEG
5:1	237-80	1	O-Ring
5:2	237-30	1	O-Ring
6	2412-34	2	Clamp-Hose
7	353-949	1	O-Ring
8	119-2074	1	Hose-HYD
9	119-2069	1	Hose-Suction

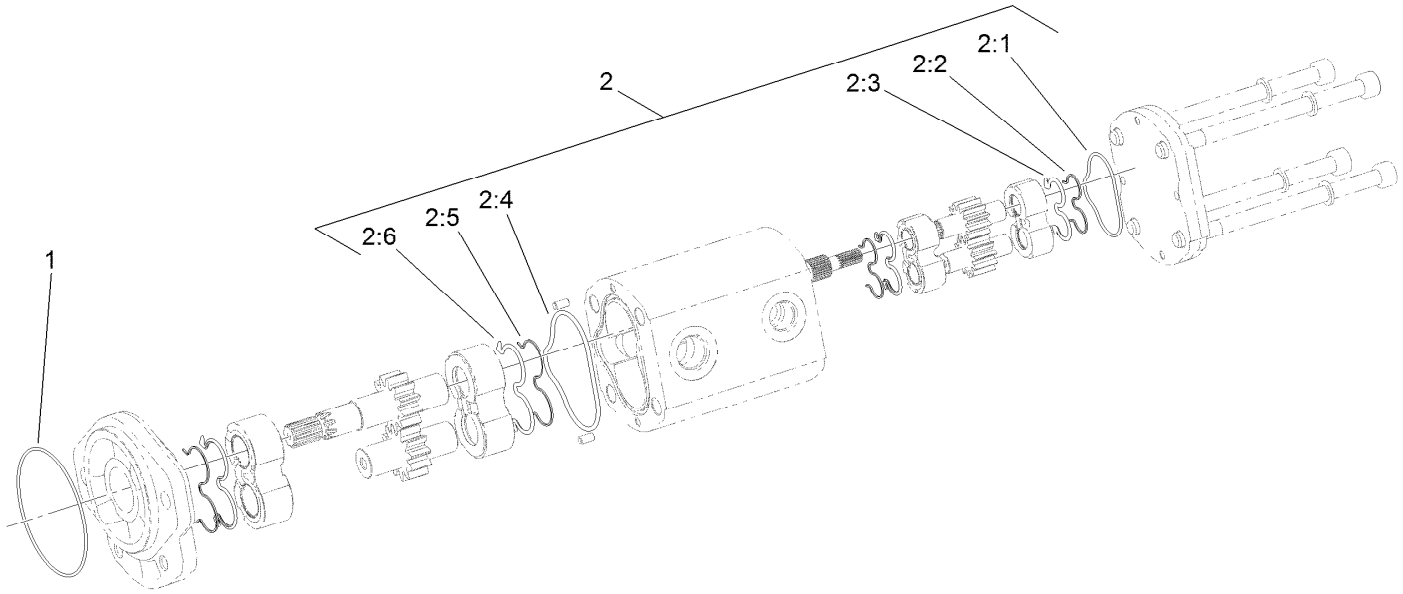

Hydraulic Gear Pump Assembly No. 114-9956

Ref.	*Part Number*	*Qty.*	*Description*
1	353-949	1	O-Ring
2	119-7134	1	Kit-Seal
2:1		1	O-Ring ●
2:2		2	Seal-Extrusion, Anti ●
2:3		2	Seal-Backup ●
2:4		1	O-Ring ●
2:5		2	Seal-Extrusion, Anti ●
2:6		2	Seal-Backup ●

● Not serviced separately

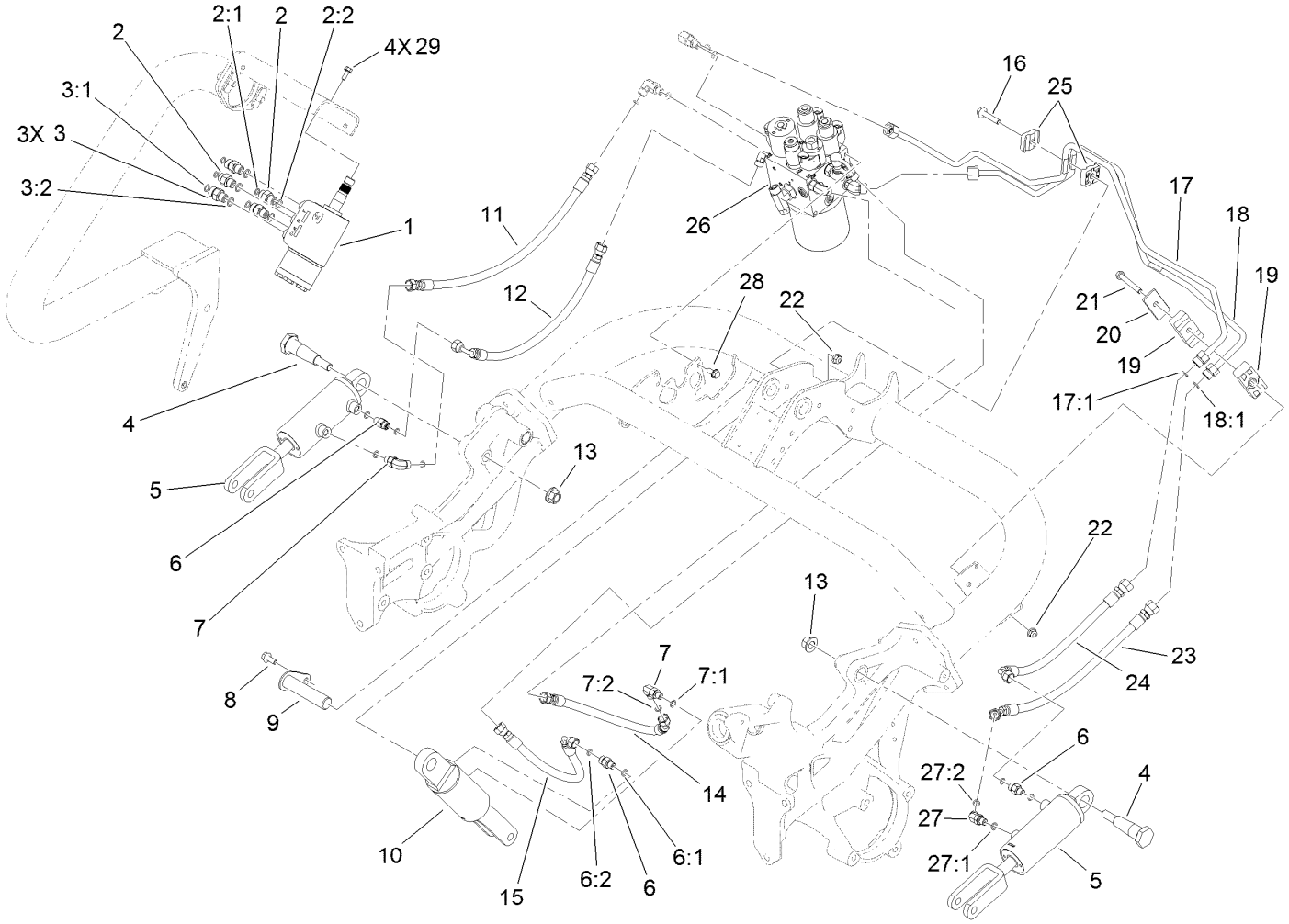

Lift Circuit Assembly

Ref.	Part Number	Qty.	Description
1	114-4672	1	Steering Valve ASM
2	340-1	2	Fitting-Straight
2:1	237-21	1	O-Ring
2:2	237-42	1	O-Ring
3	340-2	3	Fitting-Straight
3:1	237-22	1	O-Ring
3:2	237-42	1	O-Ring
4	112-5709	2	Pin-Tapered
5	119-8129	2	No. 2 And 3 HYD Cylinder ASM
6	340-92	3	Fitting-Straight
6:1	237-78	1	O-Ring
6:2	237-21	1	O-Ring
7	340-132	2	Fitting-Elbow, 90 DEG
7:1	237-78	1	O-Ring
7:2	237-21	1	O-Ring
8	3234-47	1	Screw-HHF
9	119-8104	1	Pin

Ref.	Part Number	Qty.	Description
10	119-8128	1	No. 1 HYD Cylinder ASM
11	119-2052	1	Hose-HYD
12	119-2053	1	Hose-HYD
13	99-5107	2	Nut-Lock
14	119-2051	1	Hose-HYD
15	119-2050	1	Hose-HYD
16	115-1794	1	Screw-HHF
17	119-8126	1	HYD Tube ASM
17:1	237-22	1	O-Ring
18	119-8127	1	HYD Tube ASM
18:1	237-22	1	O-Ring
19	120-3200	2	Clamp-Tube
20	69-9761	1	Plate-Cover
21	322-12	1	Screw-HH
22	104-8300	3	Nut-HF, NI
23	119-2066	1	Hose-HYD
24	119-2065	1	Hose-HYD
25	56-7973	2	Clamp-Tube

● Not serviced separately

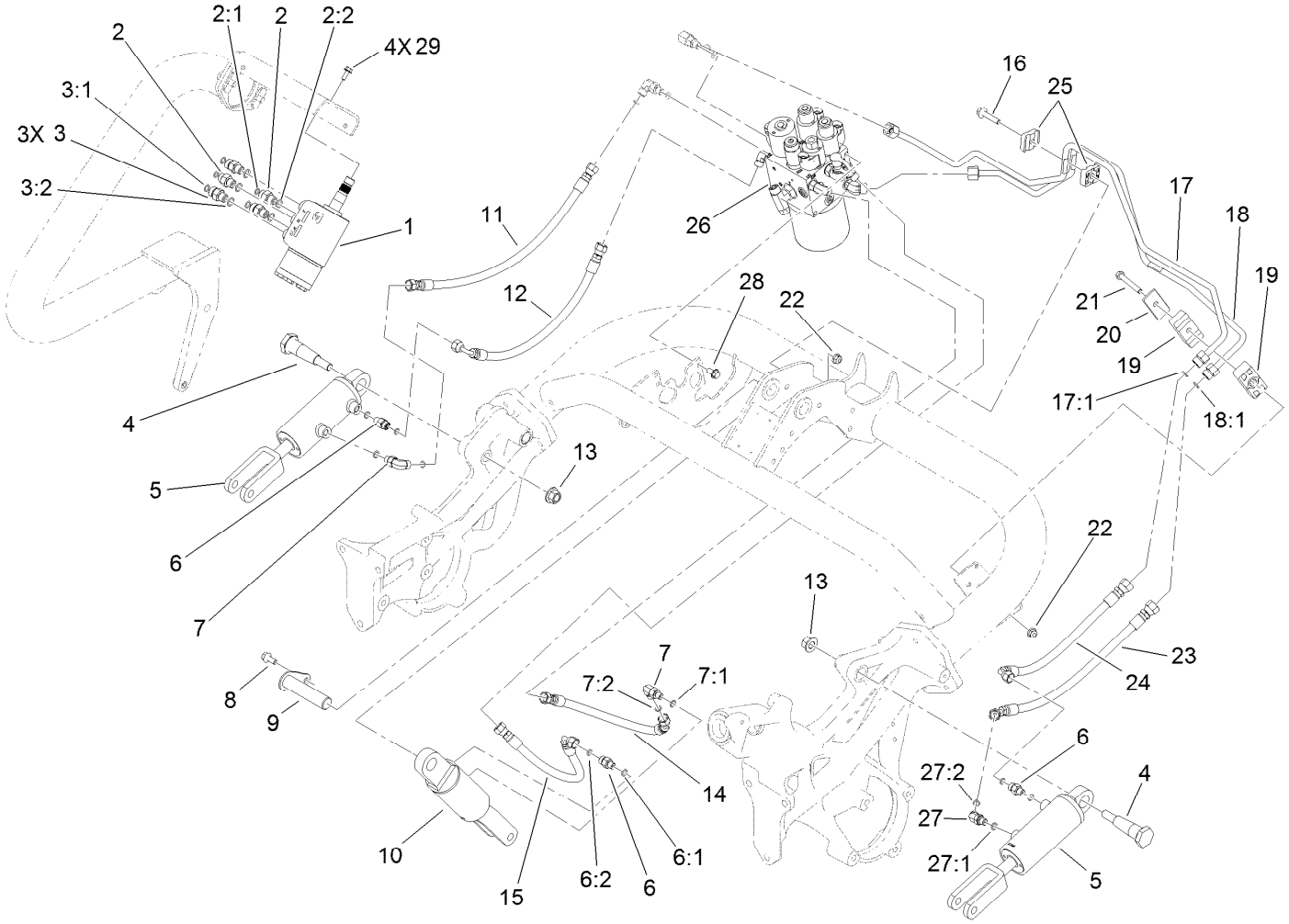

Lift Circuit Assembly (continued)

Ref.	Part Number	Qty.	Description
26		1	Hydraulic Lift Manifold ASM ●
27	340-103	1	Fitting-HYD, 45 DEG
27:1	237-78	1	O-Ring
27:2	237-21	1	O-Ring
28	3234-7	2	Screw-HHF
29	33103-016	4	Screw-HHF

● Not serviced separately

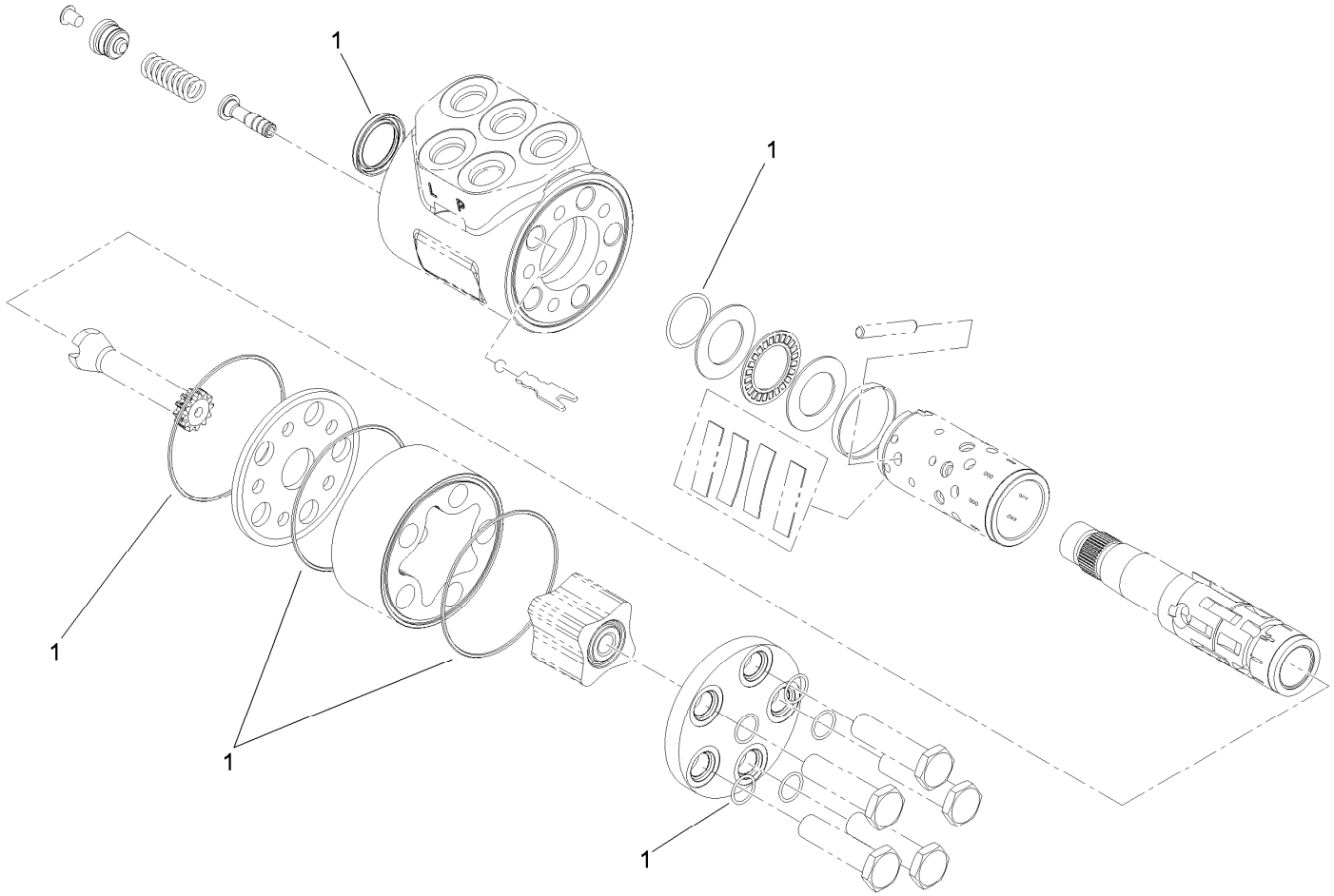

Steering Valve Assembly No. 114-4672

Ref.	*Part Number*	*Qty.*	*Description*
1	106-6716	1	Seal Kit

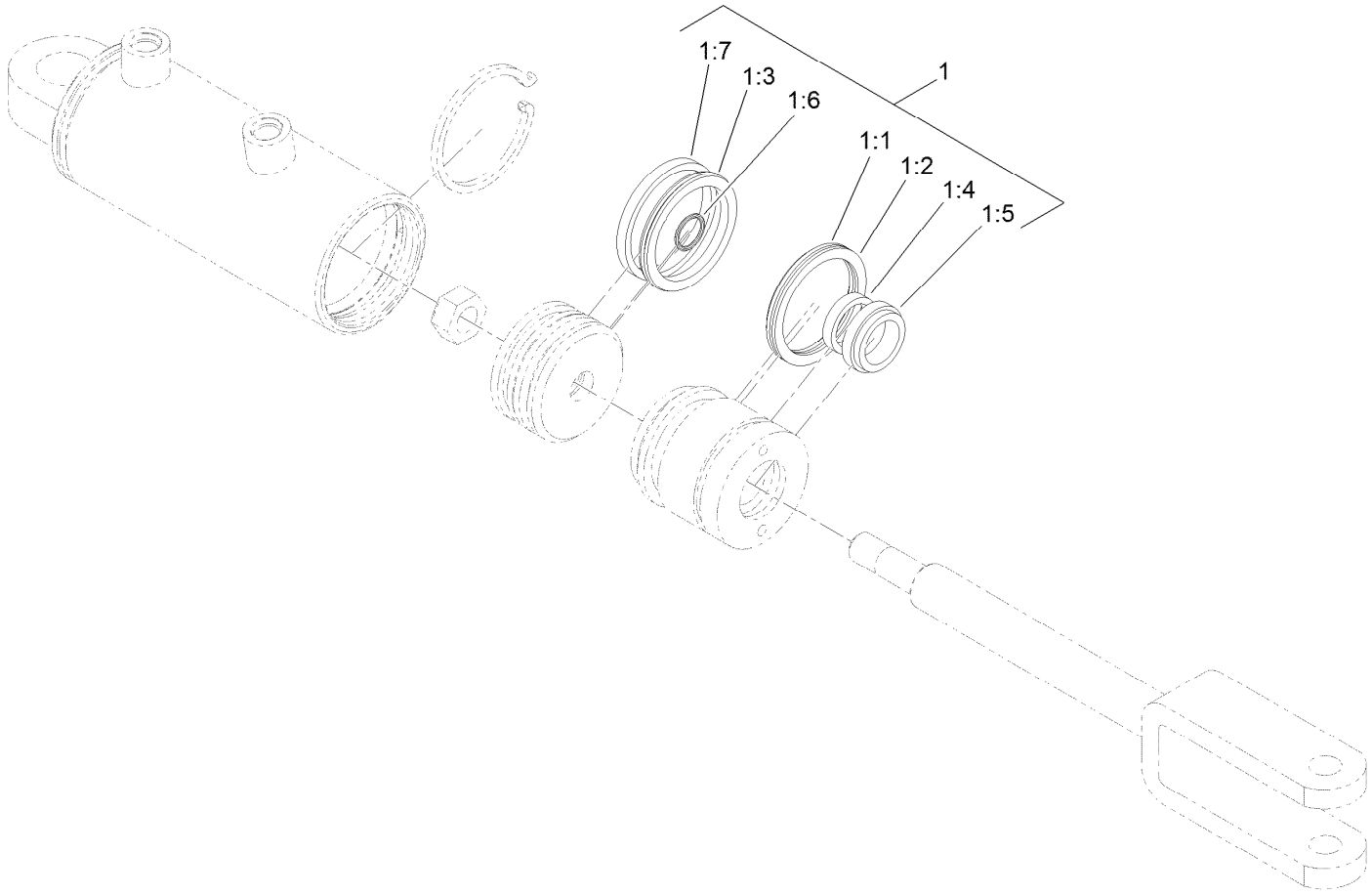

Hydraulic Cylinder Assembly No. 119-8129

Ref.	*Part Number*	*Qty.*	*Description*
1	115-3410	1	Seal Kit
1:1		1	O-Ring ●
1:2		1	Backup ●
1:3		1	Bp Seal ●
1:4		1	Bs Seal ●
1:5		1	Seal-Dust ●
1:6		1	O-Ring ●
1:7		1	Ring-Wear ●

● Not serviced separately

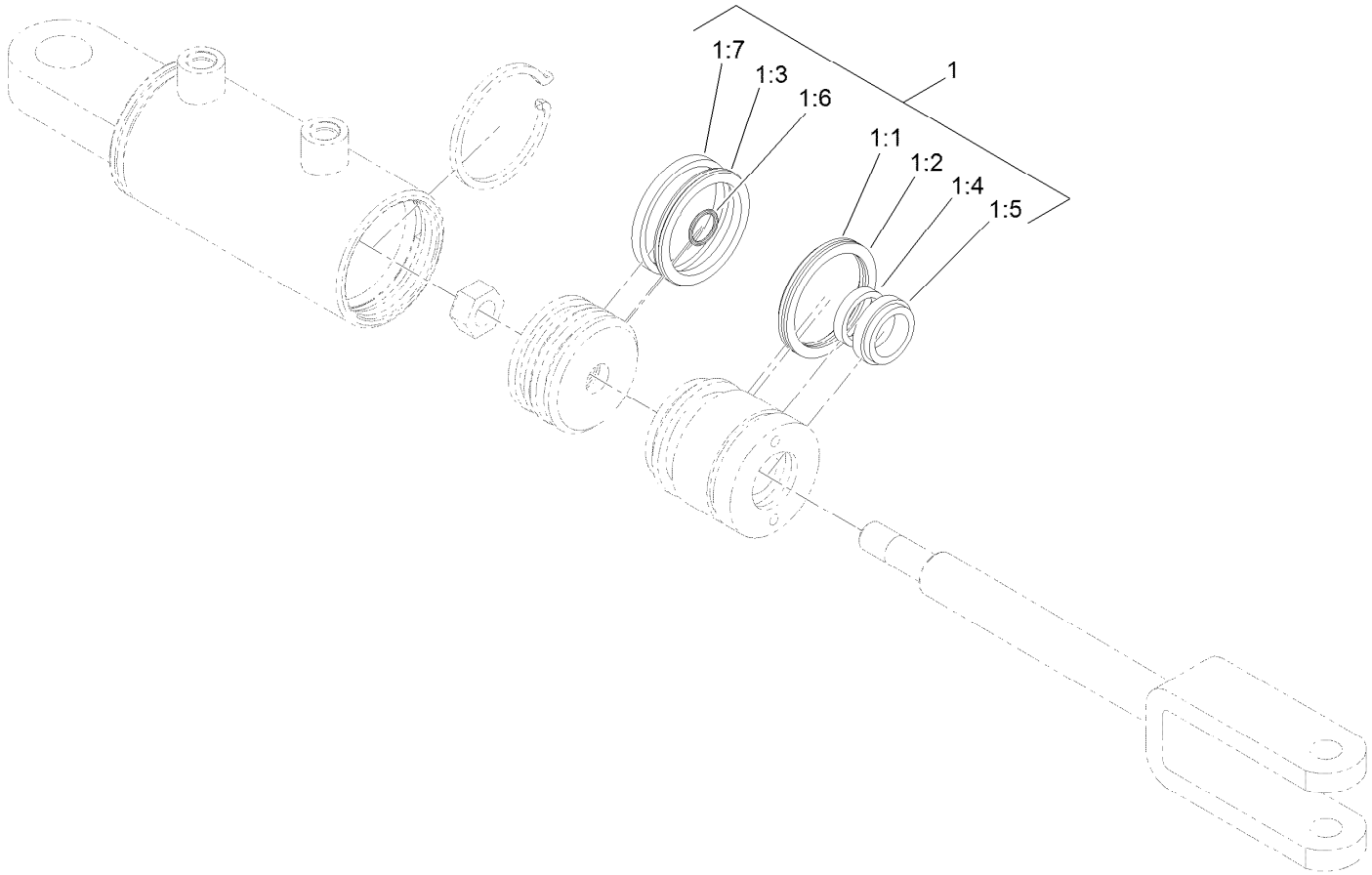

Hydraulic Cylinder Assembly No. 119-8128

Ref.	*Part Number*	*Qty.*	*Description*
1	115-3410	1	Seal Kit
1:1		1	O-Ring ●
1:2		1	Backup ●
1:3		1	Bp Seal ●
1:4		1	Bs Seal ●
1:5		1	Seal-Dust ●
1:6		1	O-Ring ●
1:7		1	Ring-Wear ●

● Not serviced separately

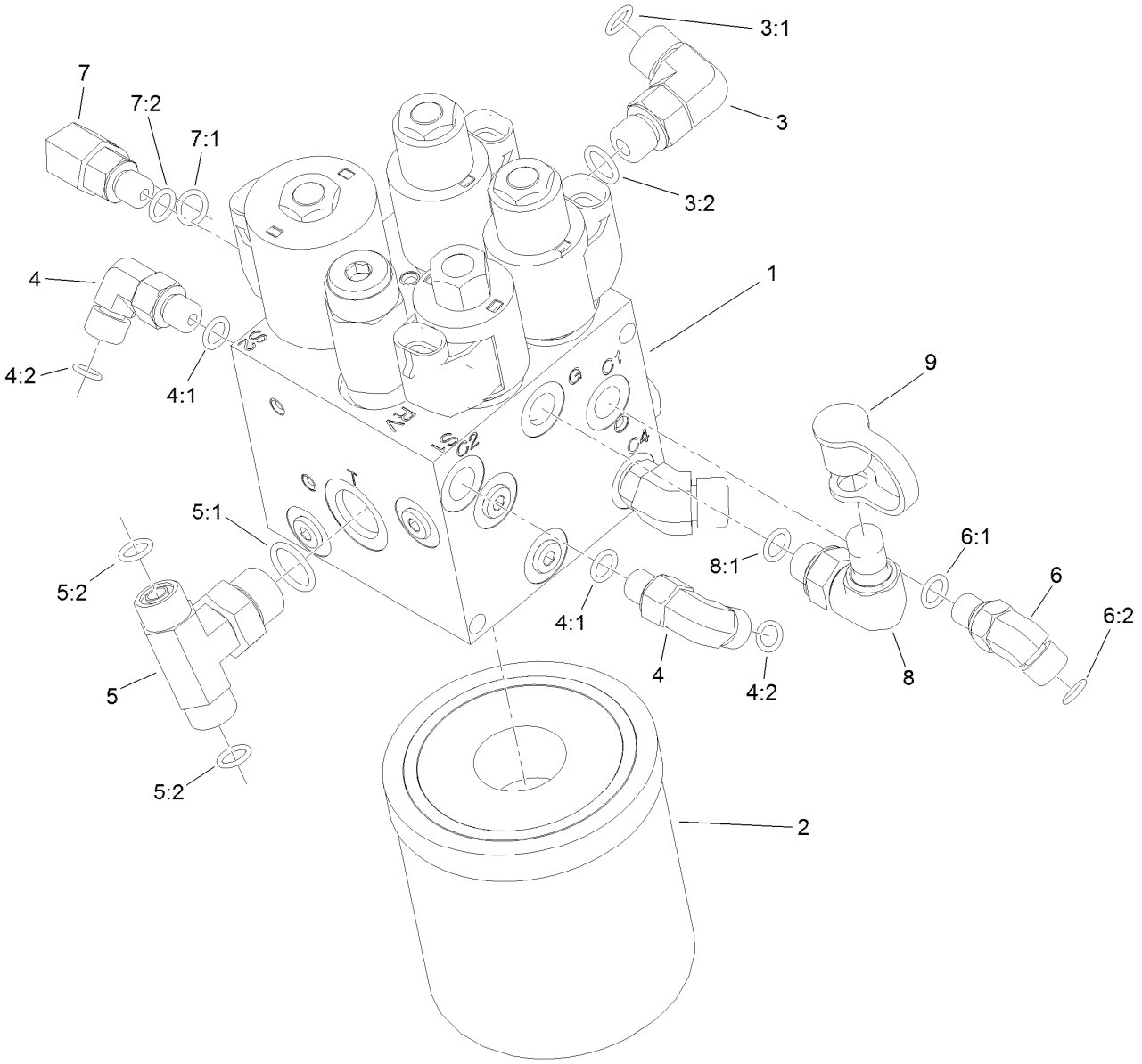

Hydraulic Lift Manifold Assembly

Ref.	Part Number	Qty.	Description
1	125-5187	1	Manifold-Lift, HYD
2	108-5194	1	Filter-Oil, HYD
3	340-77	1	Fitting-Elbow, 90 DEG
3:1	237-22	1	O-Ring
3:2	237-42	1	O-Ring
4	340-132	2	Fitting-Elbow, 90 DEG
4:1	237-78	1	O-Ring
4:2	237-21	1	O-Ring
5	92-4799	1	Fitting-Tee, HYD
5:1	237-79	1	O-Ring

Ref.	Part Number	Qty.	Description
5:2	237-22	2	O-Ring
6	340-103	1	Fitting-HYD, 45 DEG
6:1	237-78	1	O-Ring
6:2	237-21	1	O-Ring
7	340-97	1	Fitting-Elbow, 90 DEG
7:1	237-22	1	O-Ring
7:2	237-78	1	O-Ring
8	115-9147	1	Fitting-Elbow, 90 DEG
8:1	237-78	1	O-Ring
9	354-79	1	Cap-Dust

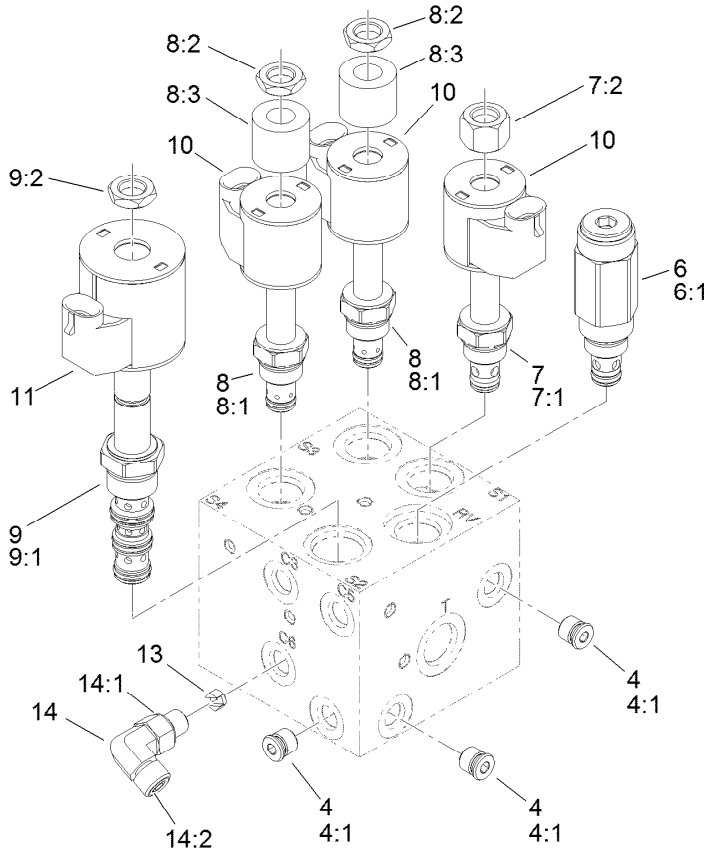

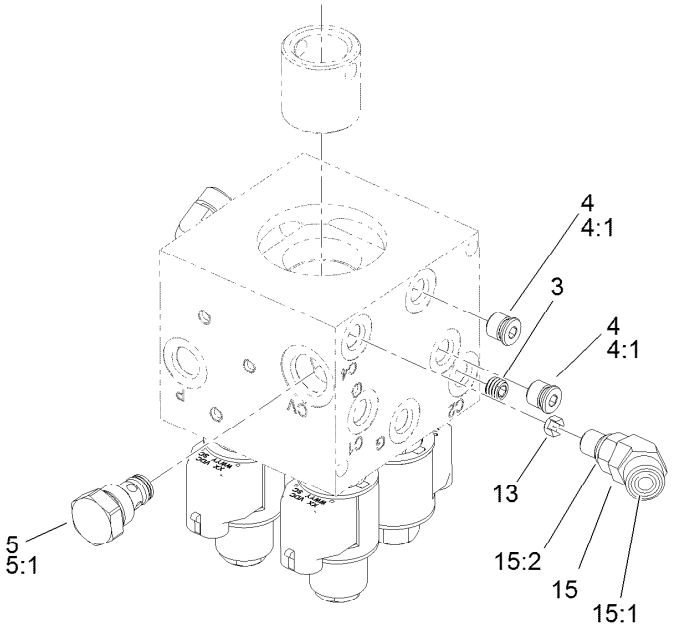

Hydraulic Lift Manifold Assembly No. 125-5187

Ref.	Part Number	Qty.	Description
3	119-7144	1	Orifice (.037 Inch)
4	353-990	5	Plug ASM
4:1	237-78	1	O-Ring
5	107-7524	1	Check Valve ASM
5:1	105-9156	1	Seal Kit
6	112-9207	1	Valve-Relief
6:1	105-9156	1	Seal Kit
7	107-7517	1	Valve-Solenoid
7:1	105-9156	1	Seal Kit
7:2	107-7812	1	Nut-Solenoid
8	110-8898	2	Valve-Solenoid
8:1	107-7527	1	Seal Kit
8:2	110-2634	1	Nut-Coil

Ref.	Part Number	Qty.	Description
8:3	110-8909	1	Spacer-Coil
9	110-8906	1	Valve-Solenoid
9:1	110-8908	1	Spool Valve Seal Kit
9:2	110-2634	1	Nut-Coil
10	110-0497	3	Coil-Solenoid
11	110-6344	1	Coil-12V, DC
13	125-5211	2	Orifice-Control, Flow (0.030)
14	340-132	1	Fitting-Elbow, 90 DEG
14:1	237-78	1	O-Ring
14:2	237-21	1	O-Ring
15	340-54	1	Elbow-45 DEG
15:1	237-22	1	O-Ring
15:2	237-78	1	O-Ring

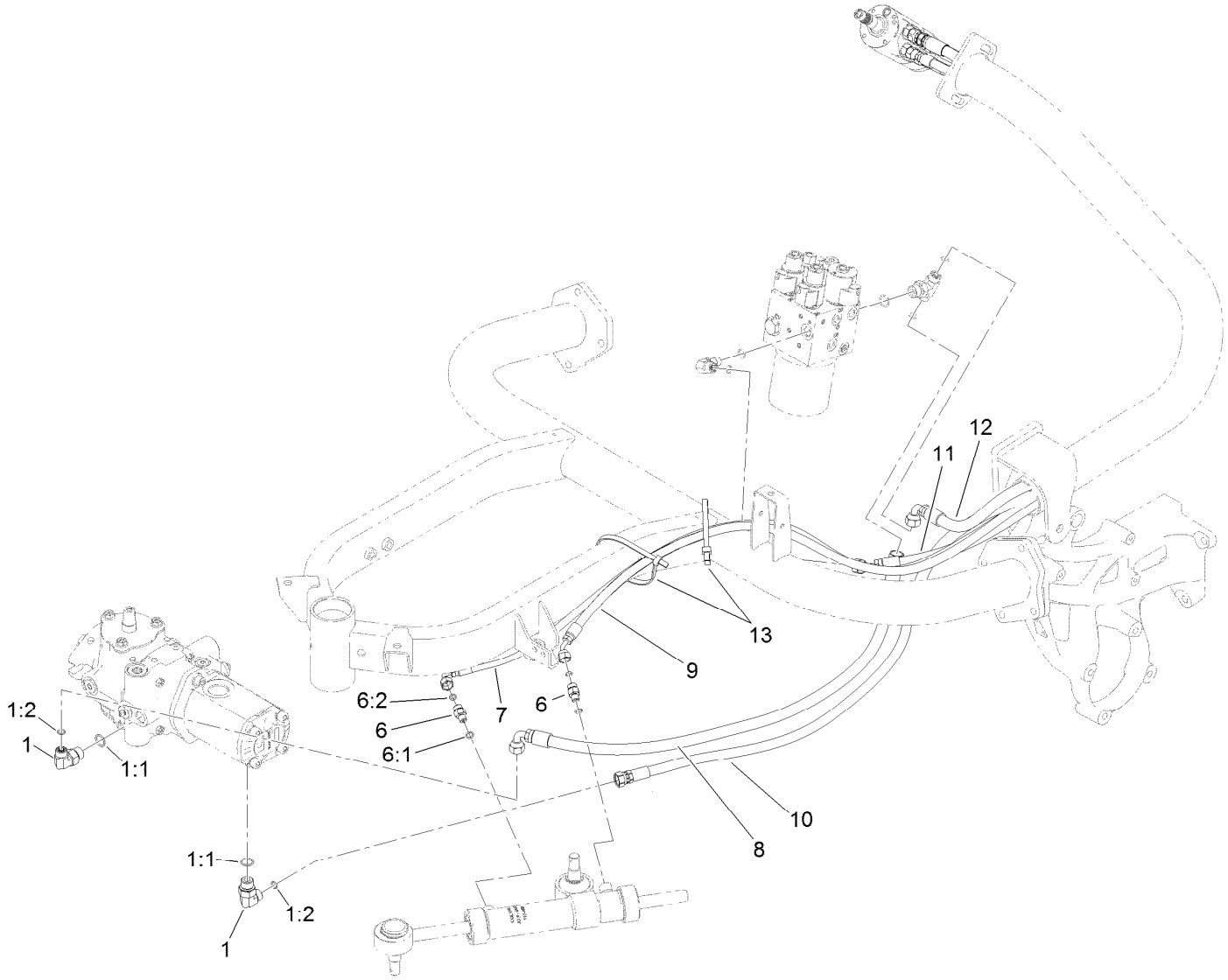

Steering Circuit Assembly

Ref.	Part Number	Qty.	Description
1	340-18	2	Fitting-HYD, 90 DEG
1:1	237-79	1	O-Ring
1:2	237-22	1	O-Ring
6	340-92	2	Fitting-Straight
6:1	237-78	1	O-Ring
6:2	237-21	1	O-Ring
7	119-8124	1	Hose-HYD
8	125-5168	1	Hose-HYD
9	119-8123	1	Hose-HYD
10	125-5167	1	Hose-HYD
11	117-3683	1	Hose-HYD
12	125-5166	1	Hose-HYD
13	3334-945	2	Tie-Cable

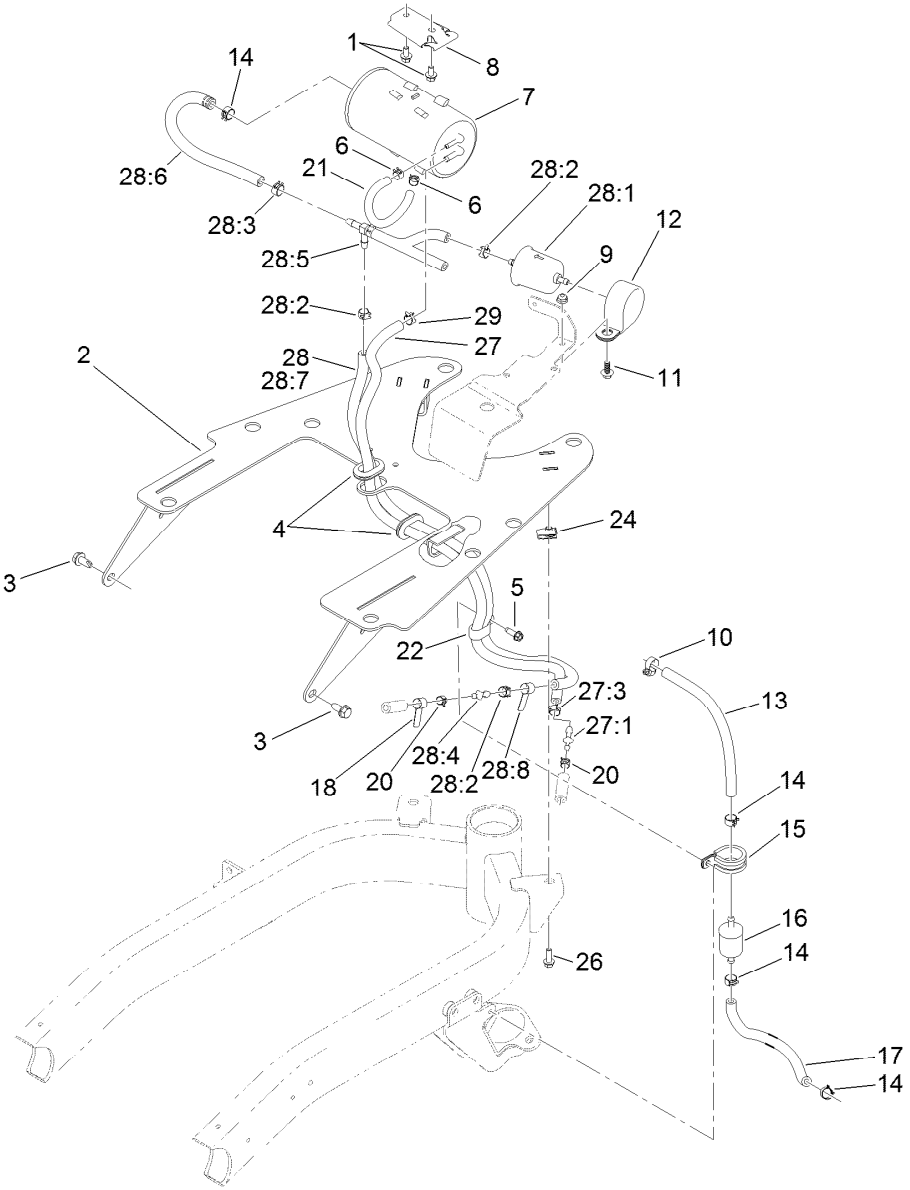

Fuel Line and Carbon Canister Hose Routing Assembly

Ref.	Part Number	Qty.	Description
1	3234-13	2	Screw-HHF
2	121-5176-03	1	Plate-Mount, Tank
3	32104-32	2	Screw-HWH
4	240-5	2	Grommet
5	49-2040	1	Screw-HWHTF
6	2412-146	3	Clamp-Hose
7	115-2251	1	Canister-Carbon
8	114-0292	1	Bracket-Canister, Carbon
9	104-7201	1	Nut-HF, NI
10	2412-108	1	Clamp-Worm
11	99-6810	1	Screw-HHF
12	100-1424	1	Clamp-R
13	109-0282	1	Hose-Fuel
14	92-2379	3	Clamp-Hose
15	120-2037	1	R-Clamp
16	94-2690	1	Filter-Fuel
17	109-0293	1	Hose-Fuel

Ref.	Part Number	Qty.	Description
18	121-6664	1	Decal-Cleaner, Air
20	2412-80	1	Clamp-Hose
21	119-8523	1	Hose-Fuel
22	119-8153	1	Clamp-R, Double Tube
24	107069	2	Clip
26	115-5103	2	Screw-HHF
27	121-5181	1	Purge Hose ASM
27:1	121-2573	1	Fitting-Straight
27:3	2412-98	2	Clamp-Hose
28		1	Tee Hose ASM ●
28:1	121-2583	1	Filter-Fuel, Inline
28:2	2412-98	3	Clamp-Hose
28:3	92-2379	2	Clamp-Hose
28:4	121-2573	1	Fitting-Straight
28:5	121-6663	1	Check Valve Hose ASM
28:6	110-4105	1	Hose-Fuel
28:7	109-3491	1	Hose-Fuel

● Not serviced separately

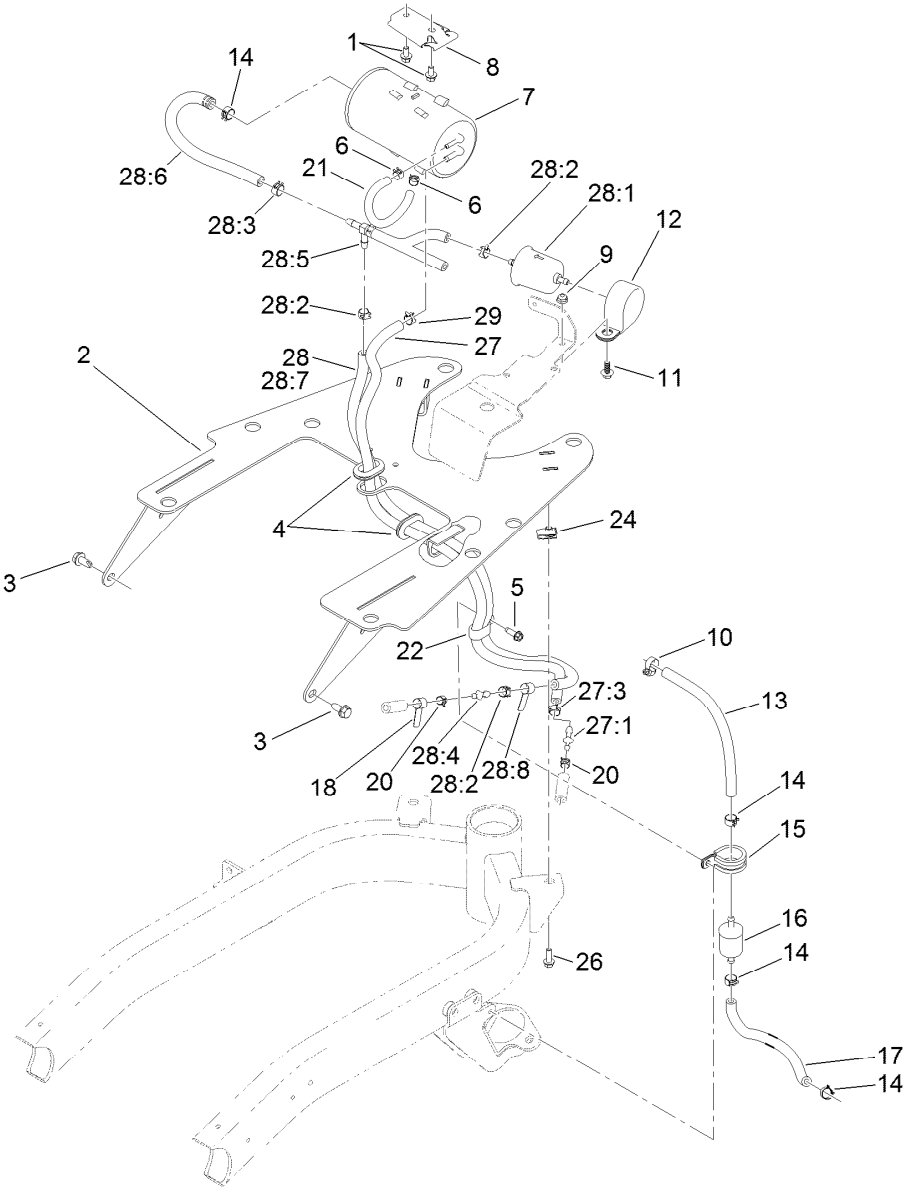

Fuel Line and Carbon Canister Hose Routing Assembly (continued)

Ref.	Part Number	Qty.	Description
28:8	121-6664	1	Decal-Cleaner, Air
29	2412-98	1	Clamp-Hose

● Not serviced separately

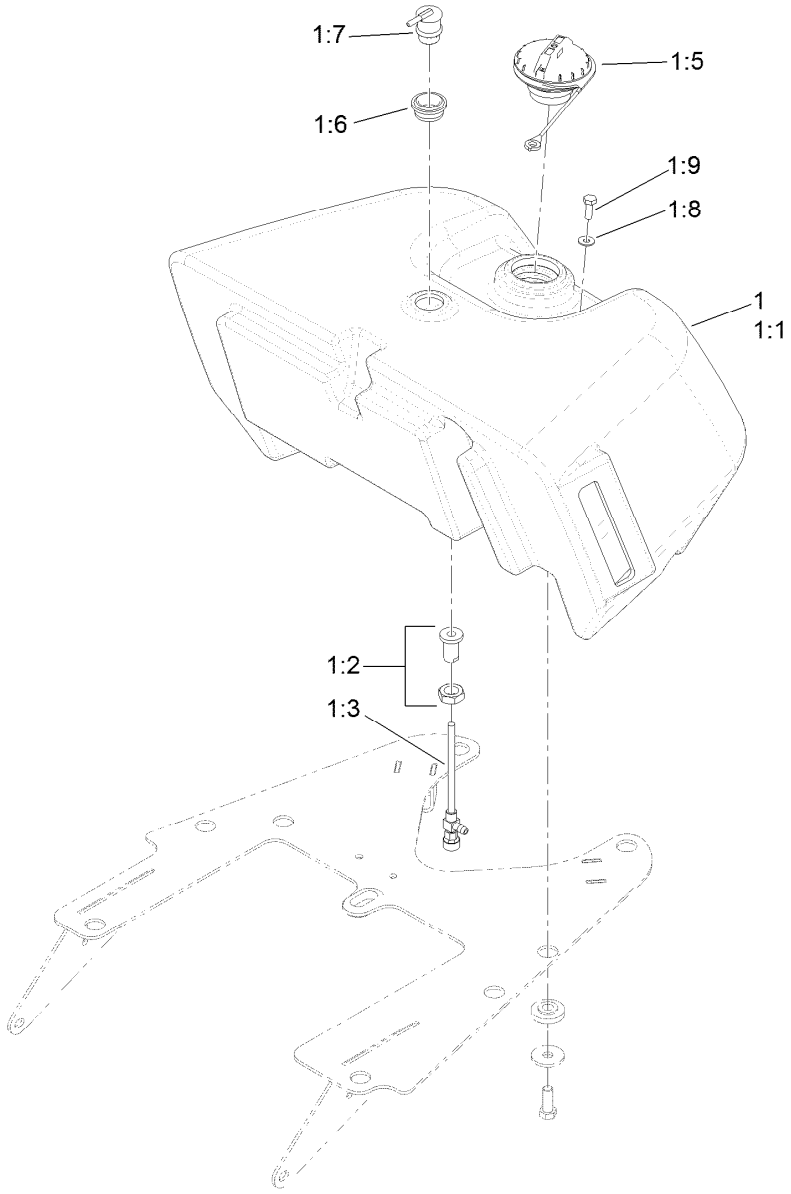

Fuel Tank Assembly

Ref.	Part Number	Qty.	Description
1	121-9571	1	Fuel Tank ASM
1:1		1	Tank-Fuel, Gas ●
1:2	114-4677	1	Bulkhead ASM
1:3	114-4679	1	Fitting-Shut Off, Fuel
1:5	117-1722	1	Cap-Fuel
1:6	114-0284	1	Grommet
1:7	119-3547	1	Valve-Vent, Fuel
1:8	3256-1	1	Washer-Flat
1:9	321-2	1	Screw-HH

● Not serviced separately

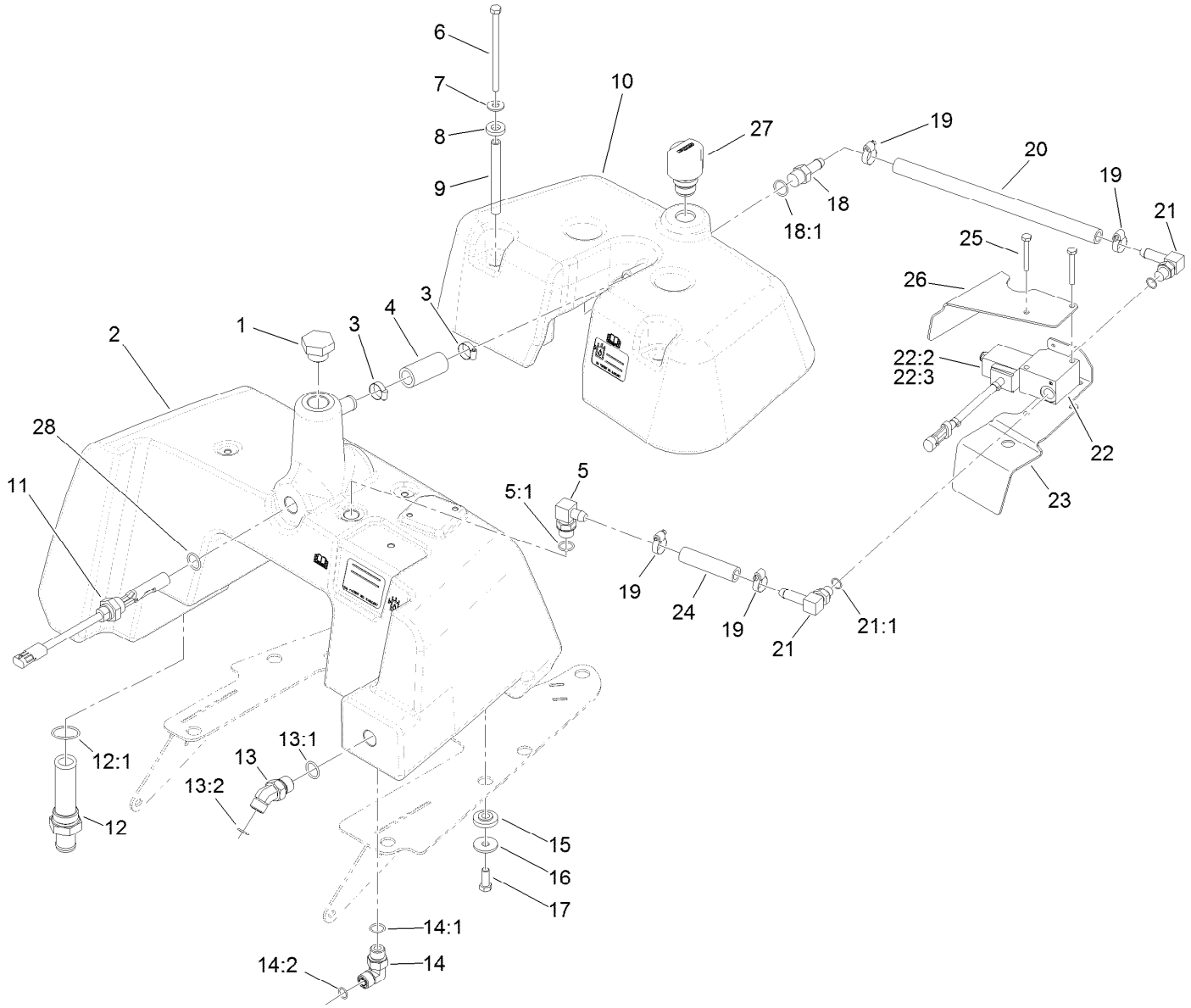

Hydraulic Tank and Leak Detector Assembly

Ref.	Part Number	Qty.	Description
1	354-74	1	Plug-HH
2	115-9822	1	Tank-Hydraulic
3	2412-141	2	Clamp-Drive, Worm
4	110-3998	1	Hose-Overflow
5	119-9331	1	Fitting-HYD 90 Spcl
5:1	237-79	1	O-Ring
6	322-29	4	Screw-HH
7	3256-71	4	Washer-Flat
8	83-1470	4	Washer-Neoprene
9	115-9825	4	Spacer-Tube, Long
10	115-8242	1	Tank-Detector, Leak
11	83-1450	1	Sensor-Level, Oil
12	112-0211	1	Strainer Fitting ASM
12:1	237-146	1	O-Ring
13	340-89	1	Fitting-HYD, 45 DEG
13:1	237-30	1	O-Ring
13:2	237-80	1	O-Ring
14	340-98	1	Fitting-Elbow, 90 DEG
14:1	237-79	1	O-Ring

Ref.	Part Number	Qty.	Description
14:2	237-30	1	O-Ring
15	240-11	8	Bushing-Flange
16	63-8410	8	Washer
17	323-6	8	Screw-HH
18	354-121	1	Fitting-STR
18:1	237-79	1	O-Ring
19	2412-36	4	Clamp-Hose
20	83-2070	1	Hose-Valve
21	354-120	2	Fitting-Elbow, 90
21:1	237-79	1	O-Ring
22	83-1460	1	Solenoid Valve ASM
22:2	83-2000	1	Spool-Valve
22:3	83-2010	1	Coil ASM
23	121-5175-03	1	Cover-Level, Oil
24	83-2080	1	Hose-Valve, Tank
25	321-16	2	Screw-HH
26	120-2027-03	1	Bracket-Shield
27	115-9793	1	Breather
28	237-80	1	O-Ring

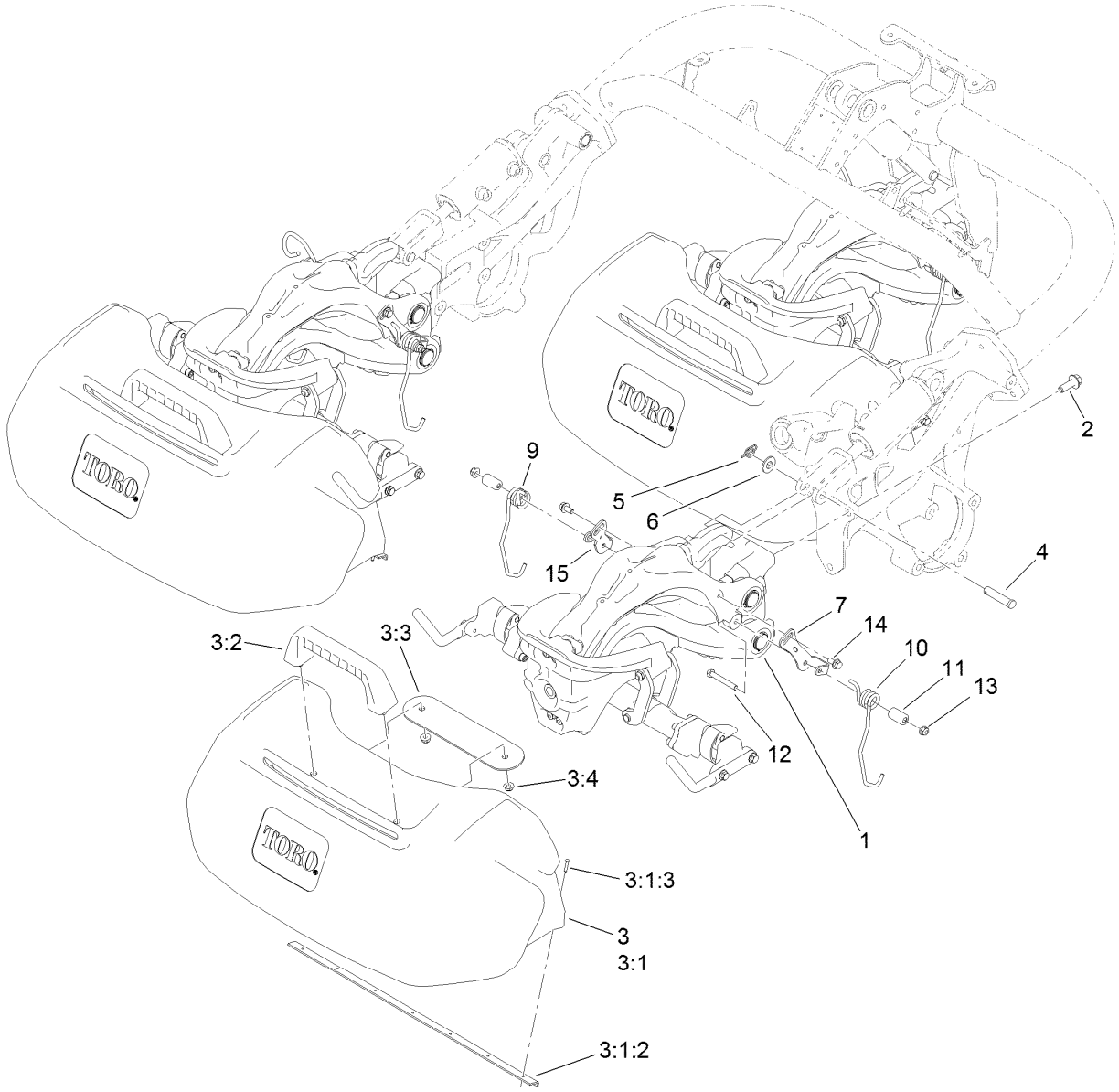

Suspension and Basket Assembly

Ref.	Part Number	Qty.	Description
1		3	Suspension ASM ●
2	117-9035	9	Screw-HHF
3	117-8096	3	Basket ASM
3:1	120-2775	1	Grass Basket ASM
3:1:2	120-2776	1	Support-Basket
3:1:3	3290-382	9	Rivet-Pop
3:2	117-8088	1	Handle-Grab
3:3	117-8092-03	1	Plate-Mounting
3:4	104-8300	2	Nut-HF, NI
4	92-2739	3	Pin-Clevis

Ref.	Part Number	Qty.	Description
5	112-1491	3	Pin-Cotter
6	29-8910	3	Washer
7	117-6822	3	Retainer-Spring, LH
9	117-6826	3	Spring-Stabilizer, RH
10	117-6827	3	Spring-Stabilizer, LH
11	117-6825	6	Spacer
12	322-12	6	Screw-HH
13	104-8300	6	Nut-HF, NI
14	114-7728	6	Screw-HF
15	117-6821	3	Retainer-Spring, RH

● Not serviced separately

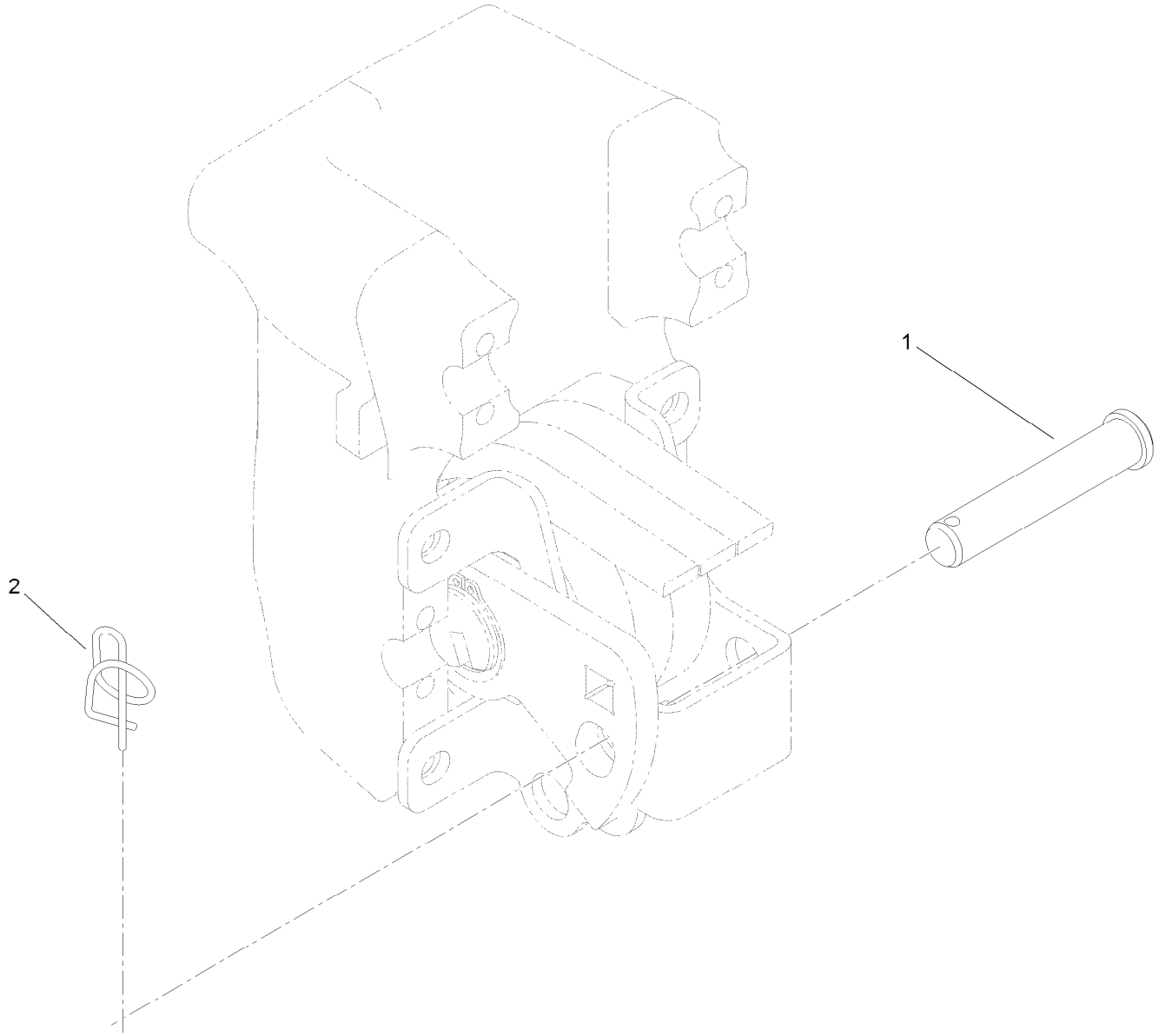

Suspension Pin Position Assembly

Ref.	*Part Number*	*Qty.*	*Description*
1	100-6541	3	Pin-Clevis
2	112-1491	3	Pin-Cotter

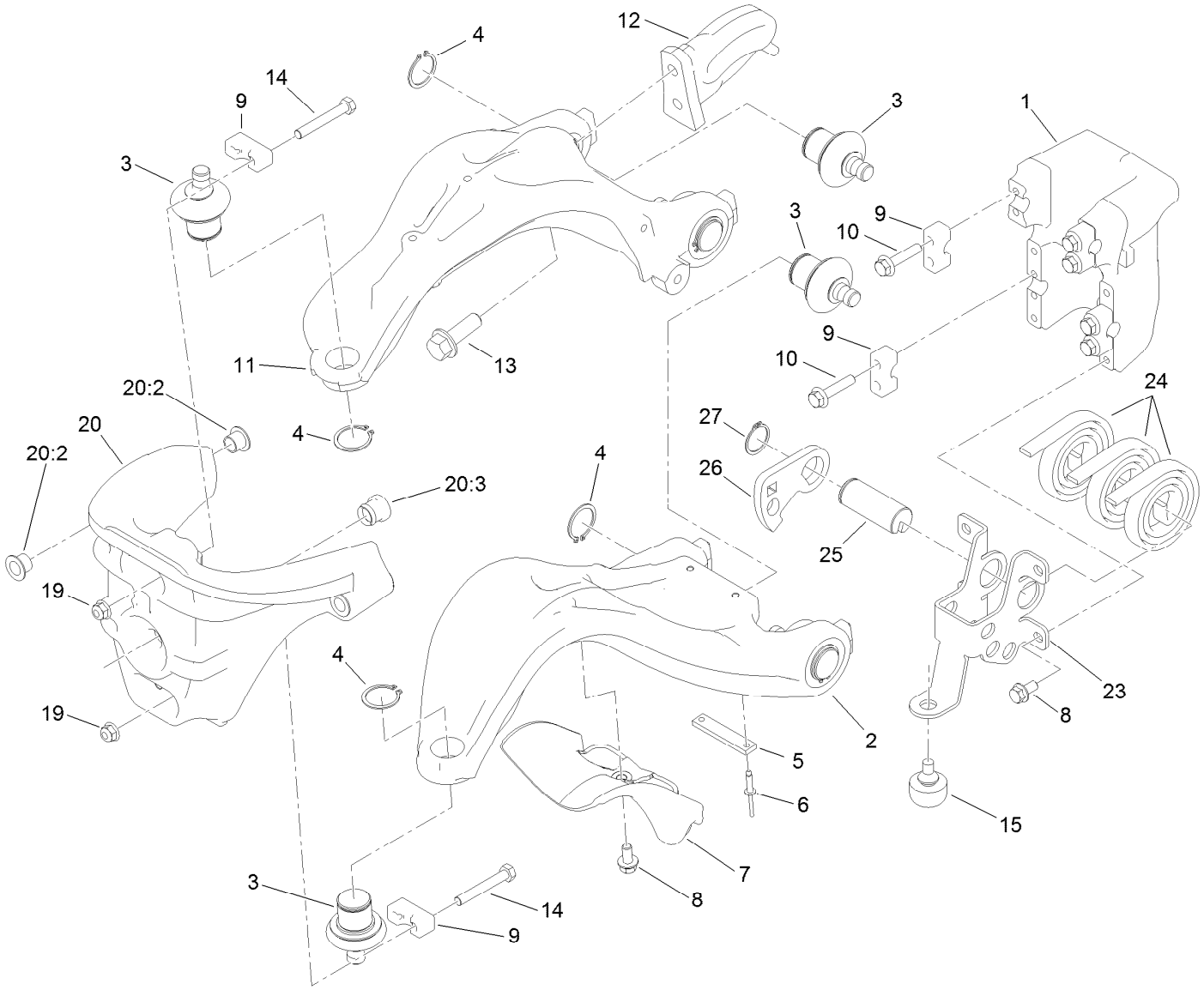

Suspension A-Arm Assembly

Ref.	Part Number	Qty.	Description
1	117-9480	1	Mount-Pivot, A-Arms
2	117-6656	1	A-Arm, Lower
3	117-6658	6	Balljoint
4	120-3225	6	Ring-Retaining, EXT
5	117-6674	1	Plate-Striker
6	3269-28	2	Rivet-Pop
7	117-6755	1	Stop-Steering
8	114-7728	5	Screw-HF
9	112-5647	6	Clamp
10	132-3837	8	Screw-HHF
11	117-6648	1	A-Arm, Upper
12	117-6650	1	Plate-Lift

Ref.	Part Number	Qty.	Description
13	100-6116	2	Screw-HHF
14	132-3838	4	Screw-HH
15	120-2849	1	Bumper-Rubber
19	104-8300	4	Nut-HF, NI
20	120-3216	1	Steering Head ASM
20:2	125-5239	4	Bushing-Flange
20:3	117-6819	1	Grommet
23	121-9568	1	Mount-Counter Balance
24	114-9306	3	Spring
25	117-6608	1	Pin
26	117-6738	1	Arm-Tensioner
27	32151-29	1	Ring-Retaining

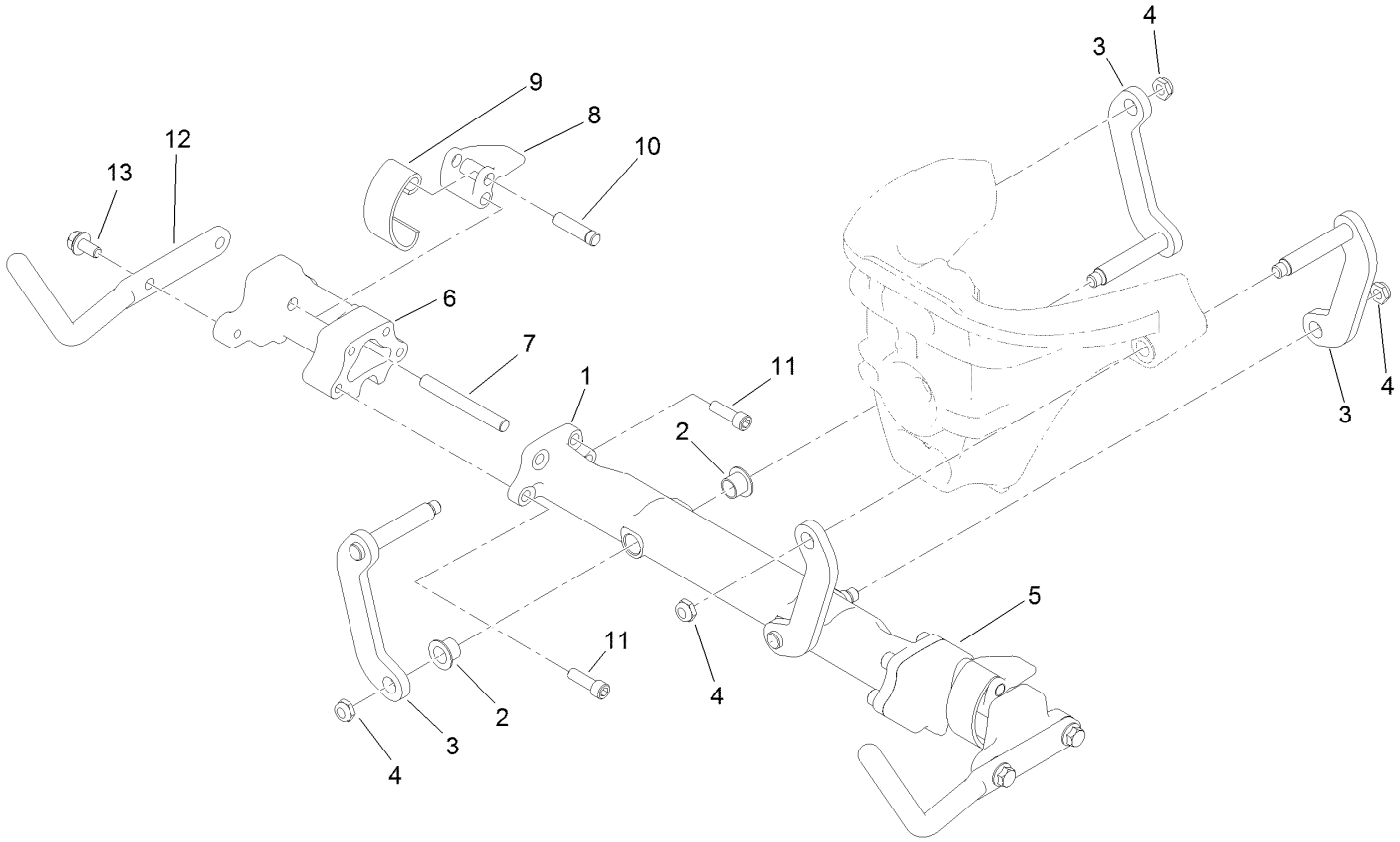

Suspension Crossarm Assembly

Ref.	*Part Number*	*Qty.*	*Description*
1	120-3217	1	Crossarm
2	125-5239	4	Bushing-Flange
3	117-6654	4	Link
4	3296-59	4	Nut-Lock, NI
5	117-9482	1	Mount-Cross Arm, LH
6	117-9492	1	Mount-Cross Arm, RH
7	114-8051	2	Pin-Pivot
8	114-8047	2	Lever
9	114-8048	2	Spring
10	114-8049	2	Pin-Pivot
11	120-3227	8	Screw-HSH
12	120-2784-01	2	Horn-Basket
13	114-7728	4	Screw-HF

Attachments and Accessories

For 04510 Greensmaster 3300 TriFlex Traction Unit

Product Name	Model/Part
Turf Evaluator	04399
8-Blade DPA Reel Mower	04613
11-Blade DPA Reel Mower	04614
14-Blade DPA Reel Mower	04615
Three-Wheel Drive Kit	04714
Light Kit	04717
Standard Seat Kit	04718
Premium Seat Kit	04719
Dethatching Unit	04720
Tri-Roller	04722
Spiker	04723
Hydraulic Oil Leak Detector Kit	04730
Spark Arrestor Screen	104-6540
Premium All Season Hydraulic Fluid (55 Gallon Drum)	108-1177
Premium All Season Hydraulic Fluid (5 Gallon Pail)	108-1178
Bimini Folding Shade Assembly	115-4510
Oil Cooler Kit	119-1691
Bag Kit	119-1715
Premium Synthetic Bio-Degradable Hydraulic Fluid (5 Gallon Pail)	119-2157
Premium Synthetic Bio-Degradable Hydraulic Fluid (55 Gallon Drum)	119-2158
Premium Armrest Kit	119-7105
Weight Kit	119-7129
Three-Wheel Drive Weight Kit	120-5750
Premium Engine Oil 10w30 (55 Gallon Drum)	121-6392
Premium Engine Oil 10w30 (5 Gallon Pail)	121-6393
400-hour Filter Maintenance Kit	30042
LH Armrest Asm	92-7307
Tire-TURFMATE	99-4506

Notes:

Notes:

TORO®

Count on it.