FORM NO. 3318-617GB Rev A

TORO®

MODEL NO. 07210—60001 AND UP

OPERATOR MANUAL

WORKMAN 3100
UTILITY VEHICLES

To understand this product, and for safety and optimum performance, read this manual before starting the engine. Pay special attention to SAFETY INSTRUCTIONS highlighted by this symbol.

It means CAUTION, WARNING or DANGER—personal safety instruction. Failure to comply with the instruction may result in personal injury.



© The TORO Company, 1996

Foreword

The TORO WORKMAN® was developed to provide an efficient, versatile, trouble free and economical work vehicle. The latest concepts of engineering, design and safety have been incorporated into this machine, along with the highest quality parts and workmanship. Excellent service will be derived if proper operation and maintenance practices are followed. This vehicle is not designed or manufactured for use on roads, streets or highways. It is not appropriate for such use.

You know, since you have purchased the industry leader in maintenance excellence, that future performance and dependability are of prime importance. TORO also is concerned about future use of the machine and of safety to the user. Therefore, this manual must be read by you and those involved with the WORKMAN to make sure that safety, proper setup, operation and maintenance procedures are followed at all times.

Safety, mechanical and some general information in this manual are emphasized. DANGER, WARNING and CAUTION identify safety messages. Whenever the triangle safety symbol appears, it is followed by a safety message that must be read and understood. For more details concerning safety, read the safety instructions on pages 3 –5. IMPORTANT identifies special mechanical information and NOTE identifies general information worthy of special attention.

If help concerning set up, operation, maintenance or safety is ever needed, contact your local Authorized TORO Distributor. In addition to genuine TORO replacement parts, the distributor also has optional equipment for the complete line of TORO turf care equipment. Keep your TORO all TORO. Buy genuine TORO parts and accessories.Servicing Air Cleaner Filter

Table of Contents

	Page
Safety	3
Specifications	9
Before Operating	11
Controls	15
Operating	19
Maintenance	26

Safety

The WORKMAN® was designed and tested to offer safe service when operated and maintained properly. Although hazard control and accident prevention partially are dependent upon the design and configuration of the machine, these factors are also dependent upon the awareness, concern, and proper training of the personnel involved in the operation, maintenance and storage of the machine. Improper use or maintenance of the machine can result in injury or death.

This is a specialized utility vehicle designed for off-road use. its ride and handling will have a different feel than what drivers experience with passenger cars or trucks. So take time to become familiar with your WORKMAN®. Not all of the attachments that adapt to the WORKMAN® are covered in this manual. See the specific Operator's Manual provided with the attachment for additional safety instructions. READ THESE MANUALS.

TO REDUCE THE POTENTIAL FOR INJURY OR DEATH, COMPLY WITH THE FOLLOWING SAFETY INSTRUCTIONS.

SUPERVISOR'S RESPONSIBILITIES

1. Make sure operators are thoroughly trained and familiar with the Operator's Manual and all labels on the vehicle.

2. Be sure to establish your own special procedures and work rules for unusual operating conditions (e.g. slopes too steep for vehicle operation). Use the 3rd High Lockout switch if high speed could result in a safety or vehicle abuse situation.

BEFORE OPERATING

3. Operate the machine only after reading and understanding the contents of this manual. A replacement manual is available by sending complete model and serial number to: The Toro Company, 8111 Lyndale Avenue South, Minneapolis, Minnesota 55420.

4. Never allow children to operate the vehicle. Never allow adults to operate it without proper instructions. Only trained and authorized persons should operate this vehicle. Make sure all operators are physically and mentally capable of operating the vehicle. Anyone who operates the vehicle should have a motor vehicle license.

5. This vehicle is designed to carry only you, the operator, and one passenger in the seat provided by the manufacturer. Never carry any other passengers on the vehicle.

6. Never operate the vehicle when under the influence of drugs or alcohol.

7. Become familiar with the controls and know how to stop the engine quickly.

8. Keep all shields, safety devices and decals in place. If a shield, safety device or decal is malfunctioning, illegible, or damaged, repair or replace it before operating the machine.

9. Always wear substantial shoes. Do not operate machine while wearing sandals, tennis shoes or sneakers. Do not wear loose fitting clothing or jewelry which could get caught in moving parts and cause personal injury.

10. Wearing safety glasses, safety shoes, long pants and a helmet is advisable and required by some local safety and insurance regulations.

11. Keep everyone, especially children and pets, away from the areas of operation.

12. Before operating the vehicle, always check all parts of the vehicle and any attachments. If something is wrong, stop using vehicle. Make sure problem is corrected before vehicle or attachment is operated again.

13. Since gasoline is highly flammable, handle it carefully.

A. Use an approved gasoline container.

B. Do not remove cap from fuel tank when engine is hot or running.

C. Do not smoke while handling gasoline.

D. Fill fuel tank outdoors and to about one inch below top of tank (bottom of filler neck). Do not overfill.

E. Wipe up any spilled gasoline.

14. Check the safety interlock system daily for proper operation; refer to page 21. If a switch should malfunction, replace the switch before operating machine. After every two years, replace the interlock switches in the safety system, whether they are working properly or not.

WHILE OPERATING

WARNING: Engine exhaust contains carbon monoxide which is an odorless, deadly poison. Carbon monoxide is also known to the State of California to cause birth defects. Do not run engine indoors or in an enclosed area.

15. Operator and passenger should remain seated whenever the vehicle is in motion. Operator should keep both hands on steering wheel, whenever possible and passenger should use the hand holds provided. Keep arms and legs within the vehicle body at all times. Never carry passengers in box or on attachments. Remember your passenger may not be expecting you to brake or turn and may not be ready.

16. Never overload your vehicle. Name plate (located under dash on passenger side) shows load limits for vehicle. Never overfill attachments or exceed the vehicle maximum GVW.

17. When starting the engine:

A. Sit on operator's seat and engage the parking brake.

B. Disengage PTO (if so equipped) and return the hand throttle lever to OFF position (if so equipped).

C. Move shift lever to NEUTRAL and depress clutch pedal.

D. Keep foot off the accelerator pedal.

E. Turn ignition key to START.

18. Using the machine demands attention. Failure to operate vehicle safely may result in a accident, tip over of vehicle and serious injury or death. Drive carefully. To prevent tipping or loss of control:

A. Use extreme caution, reduce speed and maintain a safe distance around sand traps, ditches, creeks, ramps, any unfamiliar areas or other hazards.

B. Watch for holes or other hidden hazards.

C. Use caution when operating vehicle on a steep slope. Normally travel straight up and down slopes. Reduce speed when making sharp turns or when turning on hillsides. Avoid turning on hillsides whenever possible.

D. Use extra caution when operating vehicle on wet surfaces, at higher speeds or with a full load. Stopping time will increase with a full load. Shift into a lower gear before starting up or down a hill.

E. When loading bed, distribute load evenly. Use extra caution if the load exceeds the dimensions of the vehicle/bed. Operate vehicle with extra caution when handling off-center loads that cannot be centered. Keep loads balanced and secure to prevent them from shifting.

F. Avoid sudden stops and starts. Do not go from reverse to forward or forward to reverse without first coming to a complete stop.

G. Do not attempt sharp turns or abrupt maneuvers or other unsafe driving actions that may cause a loss of vehicle control.

H. When dumping, do not let anyone stand behind vehicle and do not dump load on any one's feet. Release tailgate latches from side of box, not from behind.

I. Before backing up, look to the rear and assure no one is behind. Back up slowly.

J. Watch out for traffic when near or crossing roads. Always yield the right of way to pedestrians and other vehicles. This vehicle is not designed for use on streets or highways. Always signal your turns or stop early enough so other persons know what you plan to do. Obey all traffic rules and regulations.

K. Never operate vehicle in or near an area where there is dust or fumes in the air which are explosive. The electrical and exhaust systems of the vehicle can produce sparks capable of igniting explosive materials.

L. Always watch out for and avoid low over hangs such as tree limbs, door jambs, over head walkways, etc. Make sure there is enough room over head to easily clear the vehicle and your head.

M. If ever unsure about safe operation, STOP WORK and ask your supervisor.

19. Do not touch engine, transaxle, radiator, muffler or muffler shield while engine is running or soon after it has stopped because these areas may be hot enough to cause burns.

20. If the machine ever vibrates abnormally, stop immediately, turn engine off, wait for all motion to stop and inspect for damage. Repair all damage before commencing operation.

21. Before getting off the seat:

A. Stop movement of the machine.

B. Lower bed.

C. Shut engine off and wait for all movement to stop.

D. Set the parking brake.

E. Remove key from ignition.

F. Block wheels if machine is on an incline.

MAINTENANCE

22. Before servicing or making adjustments to the machine, stop engine, set the parking brake and remove key from ignition to prevent accidental starting of the engine.

23. Never work under a raised bed without placing bed safety support on fully extended cylinder rod.

24. Make sure all hydraulic line connectors are tight, and all hydraulic hoses and lines are in good condition before applying pressure to the system.

25. Keep body and hands away from pin hole leaks or nozzles that eject hydraulic fluid under high pressure. Use paper or cardboard, not hands, to search for leaks. Hydraulic fluid escaping under pressure can have sufficient force to penetrate skin and do serious damage. If fluid is injected into the skin it must be surgically removed within a few hours by a doctor familiar with this form of injury or gangrene may result.

26. Before disconnecting or performing any work on the hydraulic system, all pressure in system must be relieved by stopping engine, cycling dump valve from raise to lower and/or lowering box and attachments. Place the remote hydraulics lever in the float position. If box must be in raised position, secure with safety support.

27. To make sure entire machine is in good condition, keep all nuts, bolts and screws properly tightened.

28. To reduce potential fire hazard, keep the engine area free of excessive grease, grass, leaves and accumulation of dirt.

29. If the engine must be running to perform a maintenance adjustment, keep hands, feet, clothing, and any parts of the body away from the engine and any moving parts. Keep everyone away.

30. Do not overspeed engine by changing governor settings. Maximum engine speed is 3650 rpm. To assure safety and accuracy, have an Authorized TORO Distributor check maximum engine speed with a tachometer.

31. If major repairs are ever needed or assistance is required, contact an Authorized TORO Distributor.

32. To be sure of optimum performance and safety, always purchase genuine

TORO replacement parts and accessories. Replacement parts and accessories made by other manufacturers could be dangerous. Altering this vehicle in any manner may affect the vehicle's operation, performance, durability or its use may result in injury or death. Such use could void the product warranty of The TORO Company.

33. This vehicle should not be modified without the TORO Company's authorization. Direct any inquiries to:

Sound & Vibration Levels

Sound Levels

This unit has an equivalent continuous A-weighted sound pressure at the operator ear of: 78 dB(A) based on measurements of identical machines per 84/538/EEC.

Vibration Levels

This unit has a vibration level of 2.5 m/s^2 at the posterior, based on measurements of identical machines per ISO 2631 procedures.

This unit does not exceed a vibration level of 0.5 m/s^2 at the posterior based on measurements of identical machines per ISO 2631 procedures.

Symbol Glossary

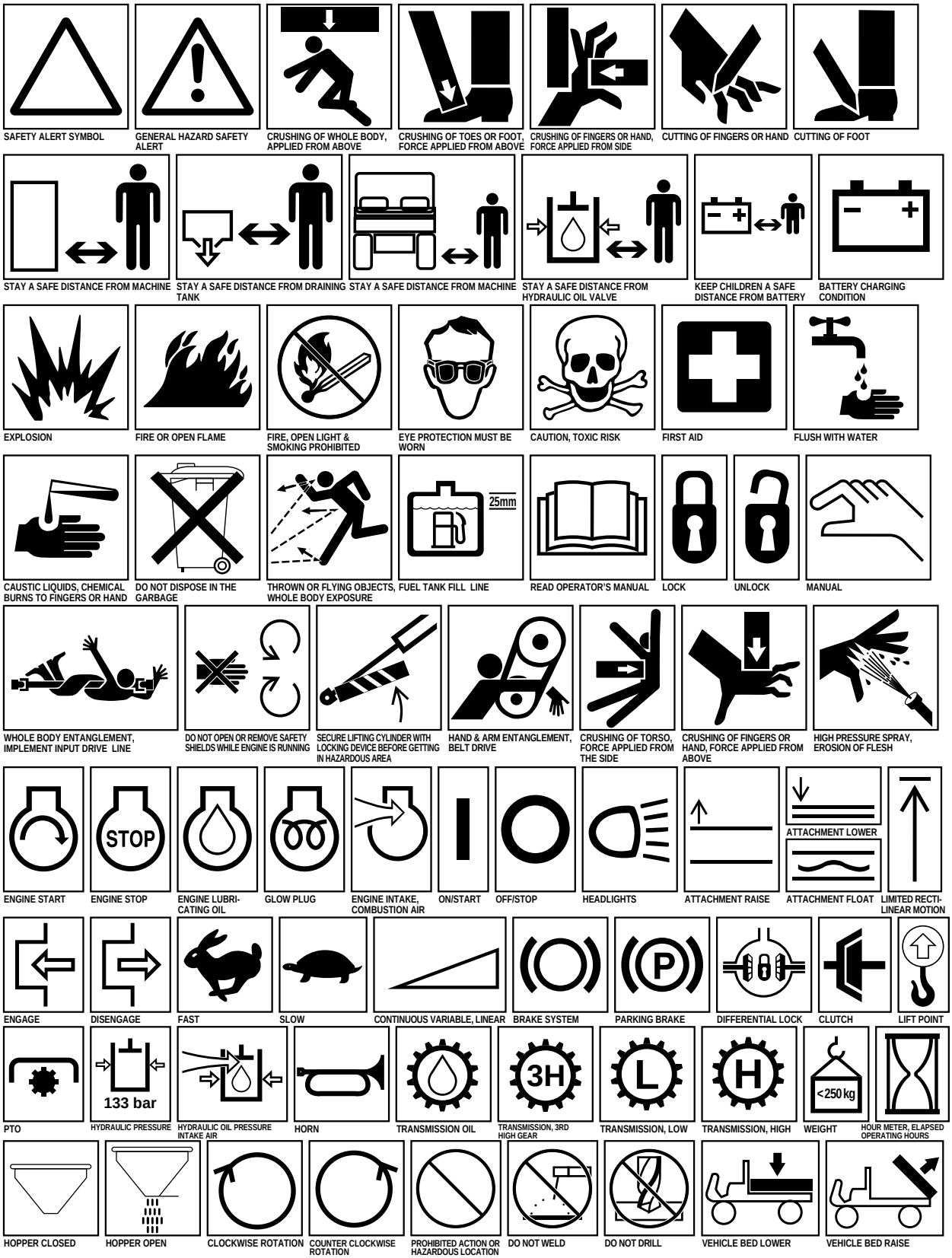

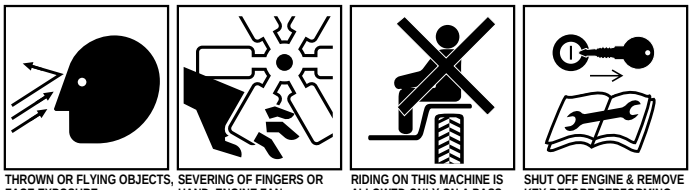

THROWN OR FLYING OBJECTS, FACE EXPOSURE

SEVERING OF FINGERS OR HAND, ENGINE FAN

RIDING ON THIS MACHINE IS ALLOWED ONLY ON A PASS-ENGER SEAT & ONLY IF THE DRIVER'S VIEW IS NOT HINDERED

SHUT OFF ENGINE & REMOVE KEY BEFORE PERFORMING MAINTENANCE OR REPAIR WORK



MACHINE TIPPING

USE CAUTION ON STEEP HILLS

MACHINE TIPPING

MACHINE TIPPING

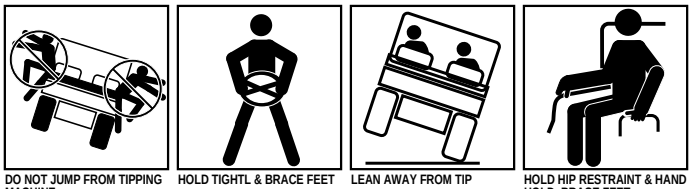

DO NOT JUMP FROM TIPPING MACHINE

HOLD TIGHTL & BRACE FEET

LEAN AWAY FROM TIP

HOLD HIP RESTRAINT & HAND HOLD, BRACE FEET

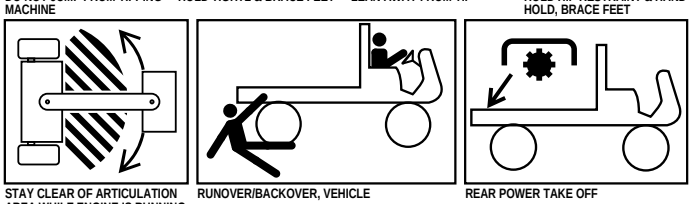

STAY CLEAR OF ARTICULATION AREA WHILE ENGINE IS RUNNING

RUNOVER/BACKOVER, VEHICLE

REAR POWER TAKE OFF

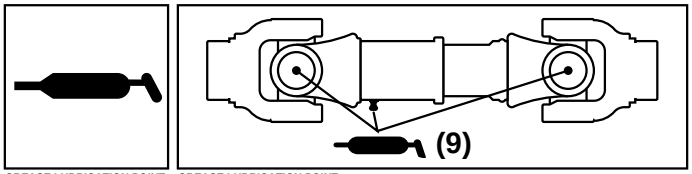

GREASE LUBRICATION POINT

GREASE LUBRICATION POINT

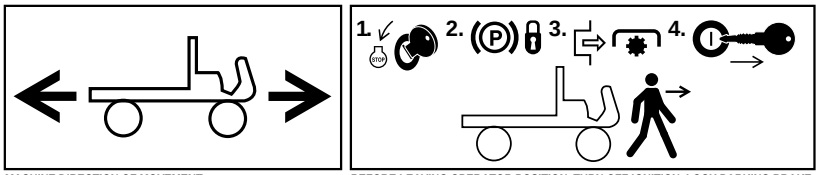

MACHINE DIRECTION OF MOVEMENT

BEFORE LEAVING OPERATOR POSITION, TURN OFF IGNITION, LOCK PARKING BRAKE, DISENGAGE PTO, REMOVE KEY FROM IGNITION.

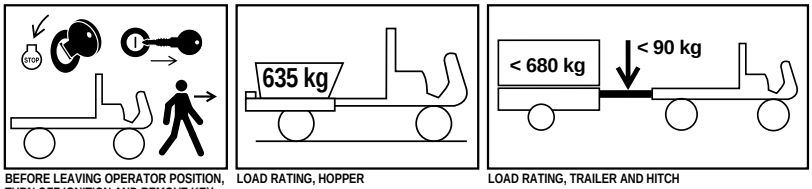

BEFORE LEAVING OPERATOR POSITION, TURN OFF IGNITION AND REMOVE KEY.

LOAD RATING, HOPPER

LOAD RATING, TRAILER AND HITCH

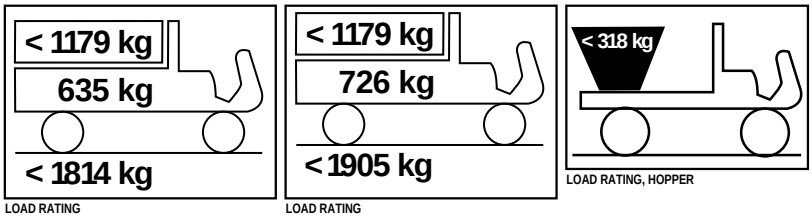

LOAD RATING

LOAD RATING

LOAD RATING, HOPPER

Specifications

Type: 4-wheel step-through, out-front operator style, two-person vehicle. Certified to meet ANSI Specifications B56.8-1988.

Engine: Kohler 4-cycle, air-cooled, 16.4 kV @ 3600 rpm, 624 cc displacement. Mechanical fuel pump, 1.9 liter oil capacity. Large capacity dual element air cleaner.

Battery: 12 volt with 370 cold-cranking Amps @ –18° C (0 degrees F.)

Fuel System: Fuel tank capacity is 26.5 l (7 gallons).

Transmission: Rear transaxle configuration, twin axle drive. 3-speed synchromesh, H-shift pattern with high-low range providing 6 forward and 2 reverse speeds. Manual engage differential lock.

Clutch: 17 cm (6.7 inch) clutch and pressure plate.

Frame: Welded, high-strength steel channels and tubes.

Front Suspension: Independent "A" frame control arm, dual coil springs and dual shock absorbers with anti-sway bar.

Rear Suspension: DeDion axle (weight carrying axle is independent of transaxle), leaf spring and dual shock absorbers.

Steering System: Power assist, 3-position tilt steering wheel, 3-3/4 turns lock-to-lock. 17.5 to 1 ratio, 34.3 cm (13.5 inch) diameter steering wheel.

Tires:

Front tires: 50.8 x 25.4 cm (20" x 10")-10, 4-ply rating, rib tread.

Rear tires: 58.4 x 26.7 cm (23" x 10.5")-12, 6-ply rating, turf tread.

Optional rear tires: 61 x 38 cm (24" x 13") x 12, 4-ply rating, turf tread.

Brakes: 4-wheel hydraulic, dual safety circuit self-adjusting drum: 17.8 (7") diameter front, 20.3 (8") diameter rear. Hand-actuated parking brake actuates rear brake shoes.

Roll Over Protection System: 2-post roll over protection structure with shoulder restraint.

Hydraulics: 4 gpm pressure balanced gear pump provides hydraulic flow for power steering, lift and optional remote hydraulics. Lift control valve and dual cylinders for lifting dump box. Transaxle is used for reservoir for hydraulic system. 7.6 l capacity. Spin-on 25-micron hydraulic oil filter. 100 mesh strainer in transaxle.

Seat: Twin molded cushions and backrests, with shoulder and hip restraints.

Controls: Foot-operated accelerator, clutch and brake pedals. Hand -operated shifter, differential lock, parking brake, high-low range shifter, hydraulic lift and tilt steering levers. Ignition switch, light switch, horn button, and 3rd high lockout switch.

Gauges: Hour meter, warning light and fuel gauge. Tachometer optional.

Lights: Twin halogen headlights and single taillight. Rear stop light.

Interlocks: Clutch pedal must be depressed to start engine.

Ground Speed:

Forward Speeds with 58 cm (23") Tires-
High range: 11,7/21.9/37 kmh (7.3/13.6/23 mph)
Low range: 4.5/8.5/14.5 kmh (2.8/5.3/9 mph)

Reverse Speeds with 58 cm (23") Tires-
High range: 11.1 kmh (6.9 mph)
Low range: 4.3 kmh (2.7 mph)

General Specifications (approx.):

Base Weight: Dry w/o flatbed 475.9 kg (1275 lbs.)

Rated Capacity: 1117 kg*(2,725 lbs).
*includes 74.6 (200 lb.) operator and 74.6 (200 lb.) passenger and loaded attachment.

Maximum. Gross Vehicle Weight: 1,493 kg (4,000 lbs.)

Tow Capacity
Tongue weight 74.6 kg (200 lbs.)
Maximum trailer weight 560 kg (1,500 lbs.)

Overall Width: 147 cm (58”) with 23 inch tires

Overall Length: 316 cm (124.5” without bed)
322.3 cm (127” with full bed)
338 cm (133”) with 2/3 bed in rear mounting location

Height: 190.5 cm(75”) to top of the Roll Over Protection System

Ground Clearance: 17.7 cm (7”) with no load

Wheel Base: 177.8 cm (70”)

Wheel Tread: (center line to center line)
Front 116.8 cm (46”)
Rear 121.6 (47.7”) (w 23” Rear Tire)

Specifications and design subject to change without notice.

Before Operating

⚠ CAUTION

Before servicing or making adjustments to the machine, stop the engine, set the parking brake and the remove key from the switch. Any load material must be removed from the bed or other attachment before working under the raised bed. Always rotate the safety support to the down position before working under the raised bed.

CHECK CRANKCASE OIL

The engine is shipped with oil in the crankcase; however, the level of oil must be checked before and after the engine is first started.

1. Position the machine on a level surface.

2. Remove the dipstick and wipe it with a clean rag. Insert the dipstick into tube and make sure it is seated fully. Remove the dipstick and check the level of oil. If the oil level is low, remove the filler cap and add enough oil to raise the level to the FULL mark on the dipstick.

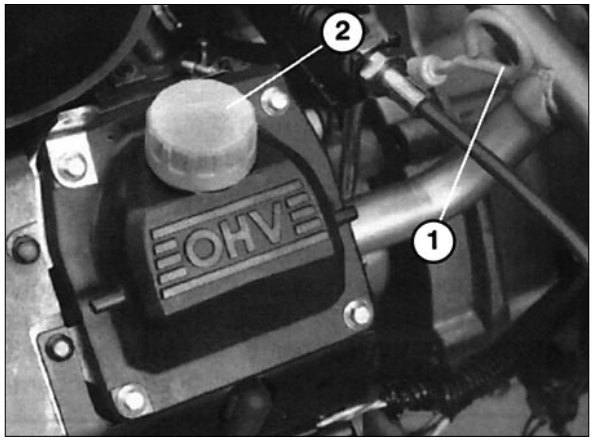

Figure 1

1. Dipstick 2. Filler cap

3. **Gasoline engines** use any high-quality detergent oil having the American Petroleum Institute—API—"service classification" SG or SG/CD. Seethe viscosity chart for recommended weight to use.

   A. Above –20° C—Use 10W-30 or 10W-40.

   B. Below 0° C—Use SAE 5W-20 or SW-30.

4. Pour oil into the fill opening until the oil level is up to the "FULL" mark on the dipstick. Add the oil slowly and check the level often during this process. DO NOT OVERFILL.

   IMPORTANT: Check the level of oil every 8 operating hours or daily. Change the oil and filter initially after the first 5 hours of operation, thereafter, change the oil and filter every 50 hours. However, change the oil more frequently when the engine is operated in extremely dusty or dirty conditions.

5. Install the dipstick firmly in place.

FILL FUEL TANK

Fuel tank capacity is approximately 32 l.

Gasoline Models:

THE TORO COMPANY STRONGLY RECOMMENDS THE USE OF FRESH, CLEAN, UNLEADED REGULAR GRADE GASOLINE IN TORO GASOLINE POWERED PRODUCTS. UNLEADED GASOLINE BURNS CLEANER, EXTENDS ENGINE LIFE, AND PROMOTES GOOD STARTING BY REDUCING THE BUILD-UP OF COMBUSTION CHAMBER DEPOSITS. LEADED GASOLINE CAN BE USED IF UNLEADED IS NOT AVAILABLE. MINIMUM OCTANE RATING OF 87.

NOTE: NEVER USE METHANOL, GASOLINE CONTAINING METHANOL, GASOLINE CONTAINING MORE THAN 10% ETHANOL, GASOLINE ADDITIVES, OR WHITE GAS BECAUSE ENGINE FUEL SYSTEM DAMAGE COULD RESULT.

1. Clean the area around the fuel tank cap.

2. Remove the fuel tank cap.

3. Fill the tank to about one inch below top of the tank, (bottom of the filler neck). DO NOT OVERFILL. Then install the cap.



Figure 2

1. Fuel tank cap

4. Wipe up any fuel that may have spilled to prevent a fire hazard.

CHECK THE TRANSAXLE / HYDRAULIC FLUID

DANGER

Because fuel is flammable, caution must be used when storing or handling it. Do not fill the fuel tank while the engine is running, hot or when the machine is in an enclosed area. Vapors may build up and be ignited by a spark or flame source many feet away. DO NOT SMOKE while filling the fuel tank to prevent the possibility of an explosion. Always fill the fuel tank outside and wipe up any spilled fuel before starting the engine. Use a funnel or spout to prevent spilling, and fill the tank no higher than 2.5 cm (one inch) below top of the tank, (bottom of the filler neck). DO NOT OVER FILL.

Store fuel in a clean safety approved container and keep the cap on the container. Keep fuel in a cool, well-ventilated place; never in an enclosed area such as a hot storage shed. To assure volatility, do not buy more than a 30-day supply of gasoline, or a 6-month supply of diesel fuel.

Since many children like the smell of gasoline, keep it out of their reach because the fumes are explosive and dangerous to inhale.

The transaxle reservoir is filled with Dexron II ATF. Check the level before the engine is first started and every 8 hours or daily, thereafter. Capacity of the system is 7.1 l (7.5 qt).

1. Position the vehicle on a level surface.

2. Clean the area around the dipstick.

3. Unscrew the dipstick from the top of the transaxle and wipe it with a clean cloth.

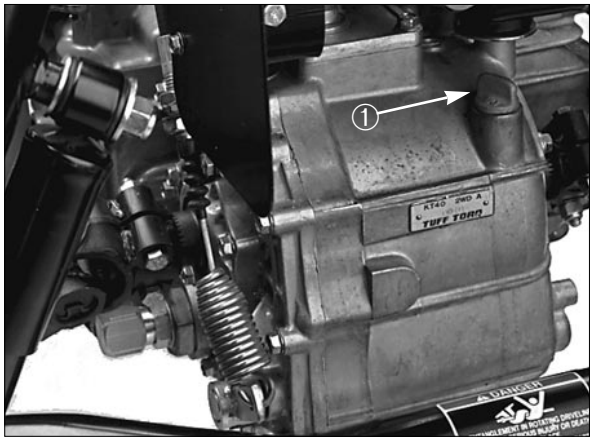

Figure 3

1. Dipstick

4. Screw the dipstick into the transaxle and make sure it is seated fully. Unscrew the dipstick and check fluid level. Fluid should be up to the top of flat portion of the dipstick. If the level is low, add enough fluid to achieve the proper level.

CHECK BRAKE FLUID

The brake fluid reservoir is shipped from the factory filled with brake fluid. Check the level before the engine is first started and every 8 hours or daily, thereafter.

1. Park the machine on a level surface.

2. Fluid level should be up to the FULL line on reservoir.

3. If the fluid level is low, clean the area around cap, remove the reservoir cap and fill to proper level. DO NOT OVERFILL.

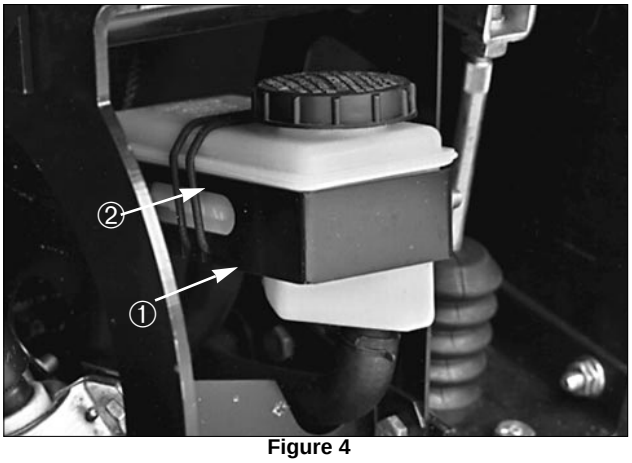

Figure 4

1. Brake fluid reservoir
2. Full line

CHECK WHEEL NUT TORQUE

⚠ WARNING

Failure to maintain proper torque could result in failure or loss of wheel and may result in personal injury. Torque front and rear wheel nuts to 61–88 Nm after 1–4 hours of operation and again after 10 hours of operation and every 200 hours thereafter.

CHECK TIRE PRESSURE

Check tire pressure every 8 hours or daily.

Maximum air pressure in the front tires is 1,4 kg/cm^2 and 2,3 kg/cm^2 in the rear (23") tires tires. Optional rear (24") tire pressure is 18 psi maximum.

1. The air pressure needed is determined by the payload carried.

2. The lower the air pressure, the less the compaction and tire marks are minimized. Lower pressure should not be used for heavy payloads at high speeds. Tire damage may result.

3. Higher pressures should be used for heavier payloads at higher speeds.

Do not exceed the maximum pressure. Use the following charts to determine correct tire pressures for tire size and payload of vehicle.

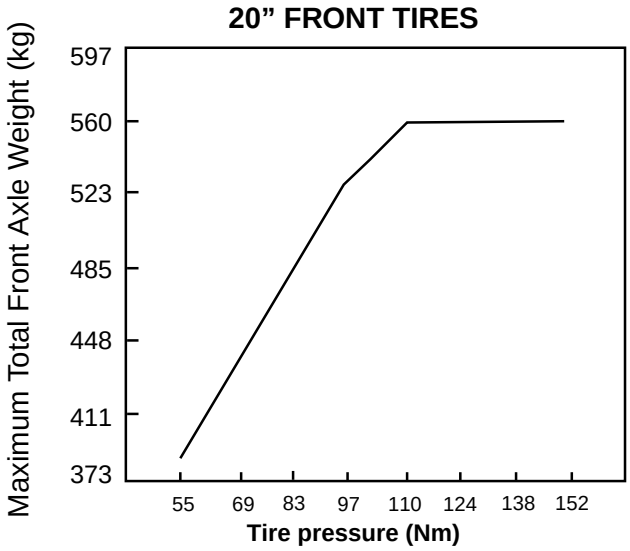

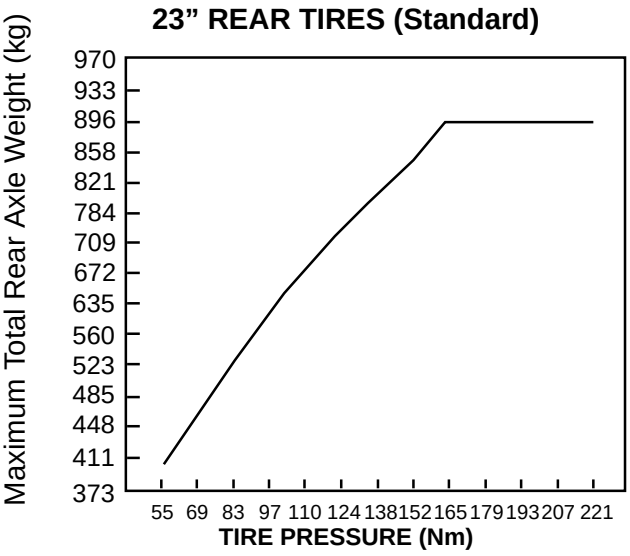

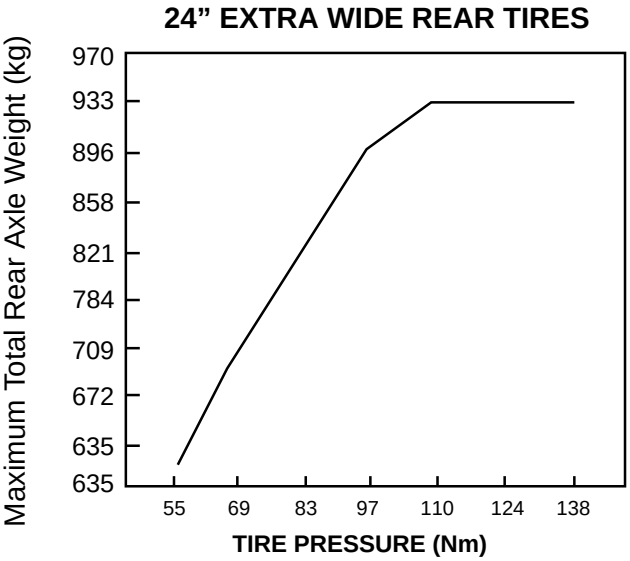

Controls

Accelerator Pedal (Fig. 5)—Used to vary engine and ground speed when the transmission is in gear. Depressing the pedal increases engine RPM and ground speed. Releasing it will decrease engine RPM and ground speed.

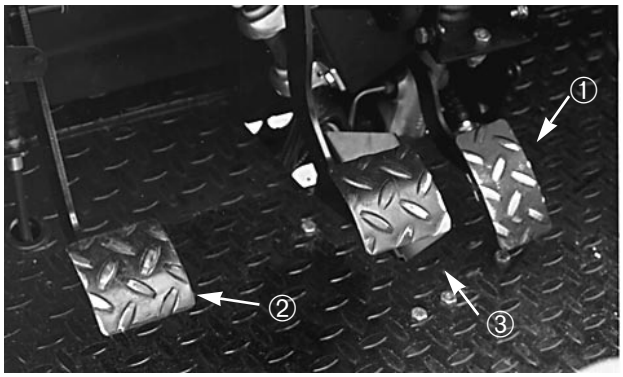

Figure 5

1. Accelerator pedal
2. Clutch pedal
3. Brake pedal

Clutch Pedal (Fig. 5)—The clutch pedal must be fully depressed to disengage the clutch when starting the engine or shifting transmission gears. Release the pedal smoothly when the transmission is in gear to prevent unnecessary wear on the transmission and other related parts.

IMPORTANT: Do not ride the clutch pedal during operation. The clutch pedal must be fully out or the clutch will slip causing friction and wear. Never hold the vehicle stopped on a hill using the clutch pedal. Damage to the clutch may occur.

Brake Pedal (Fig. 5)—The brake pedal is used to apply service brakes to stop or slow vehicle.

⚠ CAUTION

Worn or misadjusted brakes may result in personal injury. If the brake pedal travels to within 2.5 cm of the vehicle floor board, the brakes must be adjusted or repaired.

Gear Shift Lever (Fig. 6)—Fully depress the clutch pedal and move shift lever into desired gear selection. A diagram of the shift pattern is indicated below.

Shift Pattern

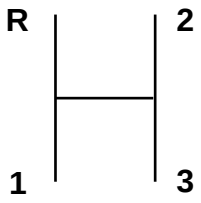

IMPORTANT: Do not shift the transaxle to the reverse or forward gear unless the vehicle is standing still. Damage to the transaxle may occur.

⚠ CAUTION

Down shifting from too high a speed can cause the rear wheels to skid and can result in loss of vehicle control. Shift smoothly to avoid grinding gears..

Differential Lock (Fig. 6)—Allows rear axle to be locked for increased traction. Differential lock may be engaged with vehicle in motion. Move the lever forward and to the right to engage the lock.

⚠ WARNING

Turning with the differential lock on can result in loss of vehicle control. Do not operate with differential lock on when making sharp turns or at high speeds.

Note: Vehicle motion plus a slight turn is required to engage or disengage the differential lock.

Choke (Fig. 6)—To start a cold engine, close the carburetor choke by pulling the choke control upward to the ON position. After the engine starts, regulate the choke to keep the engine running smoothly. As soon as possible, open the choke by pushing it downward to the OFF position. A warm engine requires little or no choking.

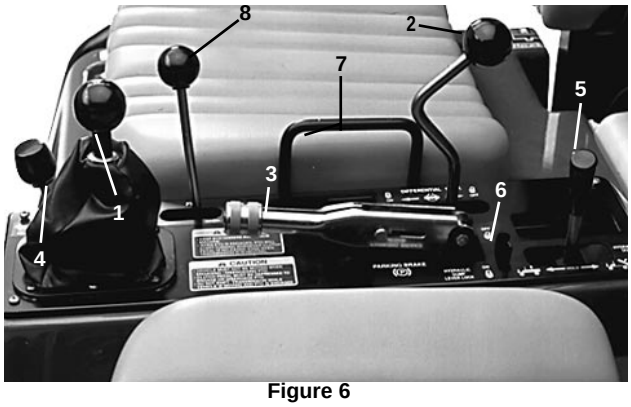

Figure 6

1. Gear shift lever
2. Differential lock
3. Parking brake
4. High-low range shifter
5. Hydraulic lift
6. Hydraulic lift lock
7. Passenger hand hold
8. PTO lever (optional)

Parking Brake (Fig. 6)—Whenever the engine is shut off, the parking brake must be engaged to prevent accidental movement of the vehicle. To engage the parking brake, pull back on the lever. To disengage, push lever forward. Make sure the parking brake is released before moving the vehicle. If the vehicle is parked on a steep grade, make sure the parking brake is applied. Also, shift the transmission into 1st gear on an uphill grade or into reverse on a down hill grade. Place chocks at the down hill side of wheels.

Hydraulic Lift (Fig. 6)—Raises and lowers bed. Move rearward to raise, forward to lower.

IMPORTANT: When lowering the bed, hold the lever in the forward position for 1 or 2 seconds after the bed contacts the frame to secure it in the lowered position. Do not hold the hydraulic lift in either the raise or lower position for more than 5 seconds after the cylinders have reached the end of their travel. The hydraulic pump may overheat, resulting in pump damage.

Hydraulic Lift Lock (Fig. 6)—Locks the lift lever so the hydraulic cylinders do not operate when vehicle is not equipped with a bed.

Passenger Hand Hold (Fig. 6)—On the left side of the passenger seat.

High-Low Range Shifter (Fig. 6)—Adds three additional speeds for precise speed control.

A. The vehicle must be completely stopped before shifting between High and Low range.

B. Shift only on level ground.

C. Depress the clutch pedal fully.

D. Move the lever fully forward for High and fully rearward for Low.

HIGH is for higher speed driving on level, dry surfaces with light loads. **LOW** is for low-speed driving. Use this range when greater than normal power or control is required. For example, steep grades, difficult terrain, heavy loads, slow speed but high engine speed (spraying).

NOTE: There is a location between HIGH and LOW in which the transaxle is in neither range. This should not be used as a neutral position because the vehicle could move unexpectedly if the HIGH-LOW shifter is bumped and the gear shift lever is in gear.

Tilt Steering Lever (Fig. 7)—Lever on right side of the console lets you adjust the steering wheel for your comfort.

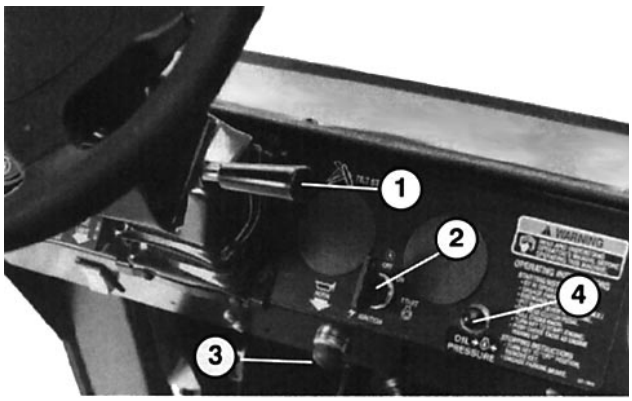

Figure 7

1. Tilt steering lever
2. Ignition switch
3. Horn button
4. Oil pressure warning light

Horn Button (Fig. 7)—Pressing this button activates the horn.

Engine Low Oil Pressure Light (Fig. 7)—This light glows if engine oil pressure drops below a safe level

while the engine is running. If the light flickers or remains ON, stop the vehicle, turn off the engine and check the oil level. If the oil level was low, but adding oil does not cause light to go out when the engine is restarted, turn the engine off immediately and contact your local TORO distributor for assistance.

Ignition Switch (Fig. 7)—The ignition switch, used to start and stop the engine, has three positions: OFF, RUN and START. Turn the key clockwise—START position—to engage the starter motor. Release the key when the engine starts. The key will move automatically to the ON position. To shut the engine off, turn the key counterclockwise to OFF.

To check warning light operation:

1. Apply the parking brake.

2. Turn the ignition key to “ON”, but do not start the engine. The oil pressure light should glow. If the light does not function, either a bulb is burned out or there is a malfunction in the system which must be repaired.

Hour Meter (Fig. 8)—Indicates the total hours of machine operation. The hour meter starts to function whenever the key switch is turned to the “ON” position.

Light Switch (Fig. 8)—Toggle this switch to activate the headlights. Push to turn lights “ON”.

Fuel Gauge (Fig. 8)—Shows the amount of fuel in the tank. Operates only when the ignition switch is in the “ON” position.

3rd High Lockout Switch (Fig. 8)—Moving this switch to the slow position and removing the key will prevent use of third gear when in the High range. The engine will shut off if the shift lever is moved to third gear when in the High range. Install the key with its teeth pointing downward. Push the key in to turn it. The key is removable in either position.

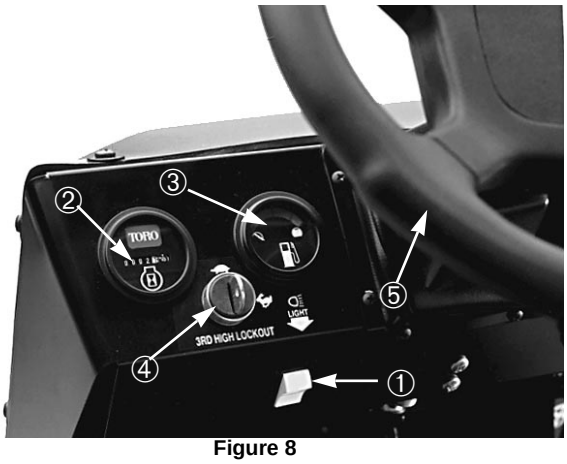

Figure 8

1. Light switch
2. Hour meter
3. Fuel gauge
4. 3rd High lockout switch
5. Steering wheel

Steering Wheel (Fig. 8)—Turns the vehicle. If the engine stalls or the power assist fails, vehicle steering will require greater effort.

Tachometer (optional-not shown)—Indicates engine RPM. Gear selection graphics indicate speed.

Remote Hydraulic Lever (optional-not shown)—Controls hydraulic flow to optional quick rear couplers.

Operating

PRE-STARTING CHECKS

Safe operation begins before taking the vehicle out for a day's work. You should check these items each time:

1. Check tire pressure.

   Note: These tires are different than car tires, they require less pressure to minimize turf compaction and damage.

2. Check all fluid levels and add the appropriate amount of Toro-specified fluids, if any are found to be low.

3. Check brake pedal operation.

4. Check to see that the lights and horn are working.

5. Turn the steering wheel to the left and right to check steering response.

6. Check for oil leaks, loose parts and any other noticeable malfunctions. Make sure engine is off and all moving parts have stopped before checking for oil leaks, loose parts and other malfunctions.

If any of the above items are not correct, notify your mechanic or check with your supervisor before taking the vehicle out for the day. Your supervisor may want you to check other items on a daily basis, so ask what your responsibilities are.

STARTING THE ENGINE

1. Sit on the seat and engage the parking brake.

2. Disengage the PTO (Power Take Off—if so equipped) and return the hand throttle lever to the OFF position (if so equipped).

3. Move the shift lever to NEUTRAL and depress the clutch pedal.

4. Keep your foot off the accelerator pedal.

   A. In extremely cold weather (below 18° C)—fully depress and release the accelerator pedal several times before trying to start the engine.

   B. If the engine is hot—depress and hold the accelerator pedal about half way down while cranking the engine.

   C. If the engine is flooded—fully depress the accelerator pedal and hold it to the floor until the engine starts. Never pump the accelerator pedal.

5. Insert the key into the ignition switch and turn it clockwise to start the engine. Release the key when the engine starts.

   IMPORTANT: To prevent overheating the starter motor, do not engage the starter longer than 10 seconds. After 10 seconds of continuous cranking, wait 60 seconds before engaging the starter motor again.

DRIVING THE VEHICLE

1. Release the parking brake.

2. Fully depress the clutch pedal.

3. Move the gear shift lever to 1st gear.

4. Release the clutch pedal smoothly while depressing the accelerator pedal.

5. When the vehicle gains enough speed, remove your foot from the accelerator pedal, fully depress the clutch pedal, move gear shift lever to the next gear and release the clutch pedal while depressing the accelerator pedal. Repeat this procedure until desired speed is attained. Stop the vehicle before shifting to reverse and forward.

   Note: Avoid long periods of engine idling.

   Note: Leaving the ignition switch in the "ON" position for long periods of time without running the engine will discharge the

battery.

IMPORTANT: Do not keep the front wheels turned against the right or left stops for longer than 5 seconds. The hydraulic pump may over heat, resulting in pump or steering gear damage.

6. Do not push or tow the vehicle to get it started. Damage to the drive train could result.

STOPPING THE VEHICLE

To stop the machine, remove your foot from the accelerator pedal, depress the clutch pedal, then depress the brake pedal.

STOPPING THE ENGINE

To stop the engine, turn the ignition key to OFF and engage the parking brake. Remove the key from the switch to prevent accidental starting.

NEW VEHICLE BREAK-IN

Your Workman® is ready for work. To provide top performance and long vehicle life, follow these guidelines for the first 100 operating hours.

- Check the fluid and engine oil levels regularly and be alert for indications of overheating in any part of the vehicle.
- After starting a cold engine, let it warm up for about 15 seconds before shifting into gear.
- Avoid racing the engine.
- Avoid situations requiring hard stops, especially when hauling heavy loads or pulling a trailer. It is necessary to fully break-in a new set of brake linings to achieve full braking performance. Follow this guideline whenever new linings are installed.
- Vary vehicle speeds during operation. Avoid excessive idling. Avoid fast starts and quick stops.
- A break-in oil for the engine is not required. The original engine oil is the same type specified for regular oil changes.
- Refer to *Maintenance* section for any special low hour checks.

CHECKING THE INTERLOCK SYSTEM

⚠ CAUTION

The interlock switches are for the operator's protection, so do not bypass them. Check operation of the switches daily to assure the system is operating. If a switch is malfunctioning replace it before operating. Regardless of whether switches are operating properly, replace them every two years to assure maximum safety. Also, do not rely entirely on safety switches—use common sense!

The interlock system prevents the engine from cranking or starting unless the clutch pedal is depressed or PTO (if so equipped) is disengaged.

To verify PTO interlock switch operation:

1. Sit on operator's seat and engage the parking brake. Move the shift lever to NEUTRAL.

2. Engage the PTO.

3. Depress the clutch pedal and turn the key clockwise to the start position.

4. If the engine cranks or starts, there is a malfunction in the interlock system that must be repaired before operating the vehicle.

OPERATING CHARACTERISTICS

The vehicle is designed with safety in mind. It has four wheels for added stability. It uses familiar automotive style controls, including the steering wheel, brake pedal, clutch pedal, accelerator pedal, and gear shifter. It is important to remember, however, that this vehicle is not a passenger car. It is a work vehi-

cle and not designed for use on roadways.

The vehicle has special tires, low-gear ratios, a locking differential, and other features that give it extra traction. These features add to the versatility of the vehicle but they can also get you into dangerous situations. You must remember that the vehicle is not a recreation vehicle or an all-terrain vehicle. And it is definitely not meant for “stunt driving”. It is a work vehicle, not a play vehicle. Do not allow children should to operate the vehicle. Anyone who operates the vehicle should have a motor vehicle license.

If you are not experienced at driving the vehicle, practice driving it in a safe area away from other people. Be sure you are familiar with all the vehicle’s controls, particularly those used for braking, steering and transmission shifting. Learn how your vehicle handles on different surfaces. Your operating skills will improve with experience, but as in operating any vehicle, take it easy as you begin. Be sure you know how to stop quickly in an emergency. If you need help, ask your supervisor for assistance.

Many factors contribute to accidents. You have control over several of the most important. Your actions, such as driving too fast for conditions, braking too fast, turning too sharp, and combinations of these, are frequent causes of accidents.

One of the major causes of accidents is fatigue. Be sure to take occasional breaks. It is important that you stay alert at all times.

Never operate the vehicle, or any equipment, if you are under the influence of alcohol or other drugs. Even prescription drugs and cold medicines can cause drowsiness. Read the label on the medicine or check with your doctor or pharmacist if you are unsure about a certain medication.

One of the most important rules to follow is to go slower in unfamiliar areas. It is surprising how much damage and injury common things can cause. Tree branches, fences, wires, other vehicles, tree stumps, ditches, sand traps, streams, and other things found in most parks and golf courses can be hazardous to the operator and passenger.

Avoid driving when it is dark, especially in unfamiliar areas. If you must drive when it is dark, be sure to drive cautiously, use the head lights, and even consider adding additional lights.

PASSENGERS

Whenever you have a passenger riding in the vehicle make sure he or she is holding on securely. Drive slower and turn less sharply because your passenger does not know what you intend to do next and may not be prepared for turning, stopping, accelerating, and bumps.

You and your passenger should remain seated at all times, keeping arms and legs inside the vehicle. The operator should keep both hands on steering wheel, whenever possible and passenger should use the hand holds provided.

There should never be passengers in the dump box or on any attachments. The vehicle is meant to have one driver and only one passenger-no more.

SPEED

Speed is one of the most important variables leading to accidents. Driving too fast for the conditions can cause you to lose control and have an accident.

Speed can also make a minor accident worse. Driving head-on into a tree at slow speed can cause injury and damage, but, driving into a tree at high speed can destroy the vehicle and kill you and your passenger.

Never drive too fast for the conditions. If there is any doubt about how fast to drive, slow down.

When using heavy attachments (more than 500 kg), such as sprayers, top dressers, or spreaders, etc., operating speeds should be restricted by moving 3rd high lockout switch to slow position.

TURNING

Turning is another important variable leading to accidents. Turning too sharply for the conditions can

cause the vehicle to lose traction and skid, or even tip over.

Wet, sandy and slippery surfaces make turning more difficult and risky. The faster you are going, the worse this situation becomes so, slow down before turning.

During a sharp turn at higher speeds, the inside rear wheel may lift off of the ground. This is not a flaw in the design, it happens with most four wheel vehicles including passenger cars. If this happens, you are turning too sharply for the speed at which you are traveling. Slow down!

BRAKING

It is good practice to slow down before you get near an obstacle. This gives you extra time to stop or turn away. Hitting an obstacle can damage the vehicle and its contents. More important, it can injure you and your passenger.

Gross vehicle weight has a major impact on your ability to stop and/or turn. Heavier loads and heavier attachments make a vehicle harder to stop or turn. The heavier the load, the longer it takes to stop.

The braking characteristics also change with no bed or attachment on the vehicle. Fast stops may cause the rear wheels to lock up before the front wheels lock up, which may affect the control of the vehicle. It is a good idea to decrease vehicle speed with no bed or attachment.

Turf and pavement are much slipperier when they are wet. It can take 2 to 4 times as long to stop on wet surfaces as on dry surfaces.

If you drive through standing water deep enough to get the brakes wet, they will not work well until they are dry. After driving through water, you should test the brakes to make sure they work properly. If they do not, drive slowly in first gear while putting light pressure on the brake pedal. This will dry the brakes.

Do not downshift for braking on icy or slippery surfaces (wet grass) or while going down a hill because engine braking may cause skidding and loss of control. Shift to a lower gear before starting down a hill.

TIPOVERS

WARNING

Tipping or rolling the vehicle on a hill will cause serious personal injury.

- If the engine stalls or you lose headway on a hill, never attempt to turn the vehicle around.
- Always back straight down a hill in reverse gear.
- Never back down in neutral or with the clutch depressed, using only the brakes.
- Never drive across a steep hill, always drive straight up or down.
- Avoid turning on a hill
- Don’t “drop the clutch” or slam on the brakes. Sudden speed change can initiate tipover.

The TORO WORKMAN® is equipped with a roll bar, hip restraints, shoulder restraints and hand hold. The Roll Over Protection System used on the vehicle will reduce the risk of serious or fatal injury in the unlikely event of a tipover, although the system cannot protect the operator from all possible injuries.

Replace a damaged Roll Over Protection System; do not repair or revise. Any alteration of Roll Over Protection System must be approved by manufacturer.

The best way to prevent accidents involving utility vehicles is through continuous supervision and training of operators and paying constant attention to the area in which vehicle is being operated.

The best way for operators to prevent serious injury or death to themselves or others, is to familiarize themselves with the proper operation of the utility vehicle, to stay alert and to avoid actions or conditions which could result in a accident. In the event of a tip over, the risk of serious injury or death will be reduced if the operator is using the Roll-Over Protection System and follows the instructions pro-

vided.

In case of tipover

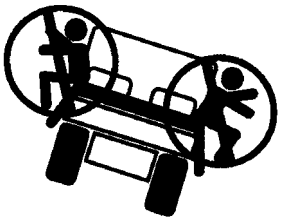

Don’t jump



Operator: Hold tight and brace feet.



Passenger: Hold hip restraint and hand hold, brace feet

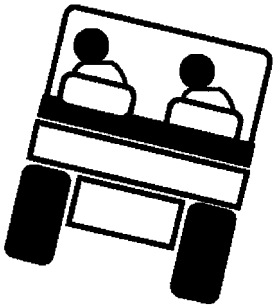

Lean away



Tipover can occur if the truck is improperly operated. Injury or death could result.

HILLS

Use extra care when on hills. Never go on hills that are extremely steep. Stopping while going down a hill will take longer than on level ground. Turning while going up or down a hill is more dangerous than turning on the level. Turns while going down hill, especially with the brakes on, and, turning up hill while traversing a hill are particularly dangerous. Even at a slow speed and without a load, tip overs are more likely if you turn on a hill.

Slow down and shift into a lower gear before starting up or down a hill. If you have to turn while on a hill, do it as slowly and cautiously as possible. Never make sharp or fast turns on a hill.

If you stall or begin to lose headway while climbing a steep hill, quickly apply the brakes, shift to neutral, restart the engine and shift to reverse. At idle speed, engine and transaxle drag will aid the brakes in controlling the vehicle on the hill and help you back down the hill more safely.

Reduce the weight of the load if it is a steep hill or if the load has high center of gravity. Remember, loads can shift. Secure them.

Note: The Workmen® have excellent hill climbing ability. The differential lock will increase this ability. Hill climbing traction can also be increased by adding weight to the rear of the vehicle in one of the following ways:

- Adding weight to inside of box, making

sure it is secured.

- Mounting wheel weights to rear wheels.
- Adding liquid ballast (calcium chloride) to rear tires.
- Traction will increase with no passenger in front seat.

LOADING AND DUMPING

WARNING

The bed will lower whenever the dump lever is pushed down, even when the engine is off. Turning off the engine will NOT prevent the box from lowering. Always place the safety support on extended lift cylinder to hold box up if you are not going to lower it right away.

WARNING

When lowering the box it is possible for you or others to get their hands or other body parts in the wrong spot and have them crushed. Take extra care that no one will get hurt. Also, do not dump on anyone's feet. It may seem funny but, it can be dangerous.

The weight and position of the cargo and passenger can change the vehicle center of gravity and vehicle handling. To avoid loss of control resulting in personal injury, follow these guidelines.

Do not carry loads which exceed the load limits described on the vehicle weight label.

The vehicle has several combinations of boxes, platforms, and attachments available. These can be used in various combinations that allow for maximum capacity and versatility. The full-sized box is 1.4m wide by 1.64 m long and can hold up to 900 kg of evenly distributed cargo.

Loads vary in how they are distributed. Sand spreads out evenly and quite low. Other items, such as bricks, fertilizer or landscape timbers, stack higher in the box.

The height and weight of the load has a significant influence on tip overs. The higher a load is stacked, the more likely the vehicle is to tip over. You may find that 900 kg stacks too high for safe operation. Reducing the total weight is one way to reduce the risk of a tip over. Distributing the load as low as possible is another way to reduce the risk of a tip over.

If the load is positioned toward one of the sides, it will make the vehicle much more likely to tip over on that side. This is especially true when turning if the load is on the outside of the turn.

Never position heavy loads behind the rear axle. If the load is positioned so far to the rear that it is behind the rear axle, it will reduce the weight on the front wheels and this will reduce steering traction. With the load all the way to the back, the front wheels can even come off of the ground when going over bumps or up a hill. This will result in a loss of steering and may lead to the vehicle tipping over.

As a general rule, position the weight of the load evenly from front to rear and evenly from side to side.

If a load is not secured, or you are transporting a liquid in a large container such as a sprayer, it can shift. This shifting happens most often while turning, going up or down hills, suddenly changing speeds or while driving over rough surfaces. Shifting loads can lead to tip overs. Always secure loads so that they do not shift. Never dump the load while the vehicle is sideways on the hill.

Heavy loads increase stopping distance and reduce your ability to turn quickly without tipping over.

The rear cargo space is intended for load carrying purposes only, not for passengers.

USING THE DIFFERENTIAL LOCK

The differential lock increases the vehicle's traction by locking the rear wheels so one wheel will not spin

out. This can help when you have heavy loads to haul on wet turf or slippery areas, going up hills and on sandy surfaces.

It is important to remember however, that this extra traction is only for temporary limited use. Its use does not replace the safe operation, already discussed concerning steep hills and heavy loads.

The differential lock causes the rear wheels to spin at the same speed. When using differential lock your ability to make sharp turns is somewhat restricted and may scuff the turf. Use the differential lock only when needed, at slower speeds and only in first or second gear.

⚠ WARNING

Tipping or rolling the vehicle on a hill will cause serious injury.

- The extra traction available with the differential lock can be enough to get you into dangerous situations such as climbing slopes that are too steep to turn around. Be extra careful when operating with the differential lock on, especially on steeper slopes.
- If the differential lock is on when making a sharp turn at a higher speed and inside rear wheel lifts off the ground, there may be a loss of control which could cause the vehicle to skid (Refer to *Differential Lock Operation*). Use the differential lock only at slower speeds.

TRANSPORTING THE VEHICLE

For moving the vehicle long distances, a trailer should be used. Make sure the vehicle is secured to the trailer.

TOWING THE VEHICLE

⚠ WARNING

Towing at excessive speeds could cause the vehicle to lose steering control. Never tow the vehicle faster than 8 km/h.

In case of emergency, the vehicle can be towed for a short distance. However, Toro does not recommend this as a standard procedure.

Towing the vehicle is a two-person job. Affix a tow line to the holes in the front frame member. Move the shifter to Neutral and release the parking brake. If the machine must be moved a considerable distance, transport it on a truck or trailer.

Note: The power steering will not function, making it difficult (increase effort) to steer.

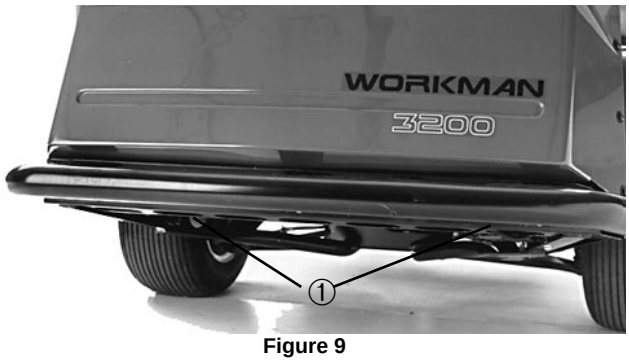

Figure 9

1. Eye holes in frame

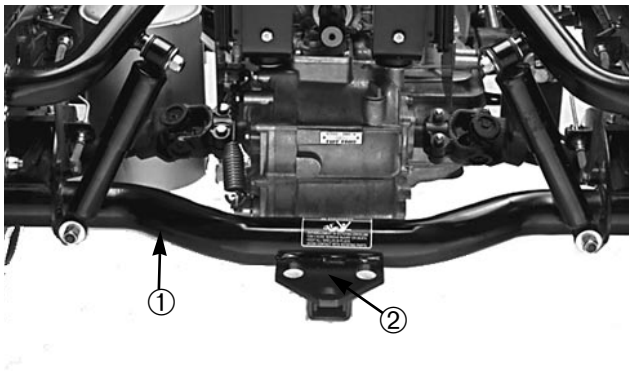

Figure 10

1. Axle tube
2. Hitch plate location (optional)

TRAILER TOWING

The Workman® is capable of pulling trailers and attachments of greater weight than the vehicle itself.

Several types of tow hitches are available for the Workman®, depending on your application. Contact your Authorized TORO Distributor for details.

When equipped with a tow hitch bolted onto rear axle tube, your Workman® can tow trailers or attachments with a Gross Trailer Weight (GTW) up to 680

kg. Always load a trailer with 60% of the cargo weight in the front of the trailer. This places approximately 10% (90 kg max.) of the Gross Trailer Weight (GTW) on the tow hitch of the vehicle.

When towing either standard tongue or 5th wheel trailers having a Gross Trailer Weight (GTW) in excess of 900 kg, use either a chassis mounted draw bar hitch (rated for 1590 kg. GTW) or the 5th wheel kit with the brakes. Trailer brakes are required whenever a trailer over 900 kg. GTW is towed behind a Workman vehicle.

When hauling cargo or towing a trailer (attachment), do not overload your vehicle or trailer. Overloading can cause poor performance or damage to the brakes, axle, engine, transaxle, steering, suspension, body structure or tires.

Important: To reduce potential for drive line damage, use low range.

When towing 5th wheel attachments, like a fairway aerator, always install the bar included with the 5th wheel kit to prevent the front wheels from lifting off the ground if the towed attachments movement is suddenly impaired.

Maintenance

Daily Maintenance Procedures

Check the following items daily

- Safety interlock operation
- Service & park brake operation
- Clutch and shifter operation
- Fuel level
- Engine oil level
- Transaxle oil level
- Brake fluid level
- Air filter prefilter
- Inspect engine cooling fins
- Unusual engine noises
- Tire pressure
- Hydraulic hoses for damage
- Fluid leaks
- Instrument operation
- Lubricate all grease fittings (also immediately after every washing)
- Touch-up damaged paint

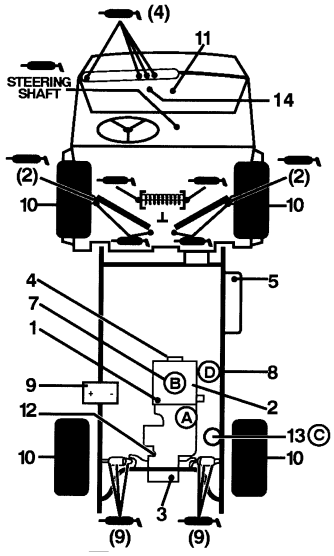

WORKMAN 3100 QUICK REFERENCE AID

Check/Service

1. Engine oil level
2. Engine oil drain
3. Transaxle/Hydraulic oil level (dipstick)
4. Belt (Hydraulic pump)
5. Fuel (unleaded fuel only)
6. Grease points (33) 100 hours
7. Air filter
8. Fuel filter
9. Battery
10. Tire pressure—maximum 1,4 kg/cm^2 front 1,3 kg/cm^2 rear (24" tire)
11. Fuses (Lights 10 A, ignition 7,5 A, dash accessories 7,5 A)
12. Hydraulic strainer
13. Hydraulic oil filter
14. Brake fluid

	Fluid Type	Capacity	Change Intervals Fluid	Change Intervals Filter	Filter Part No.
Engine Oil 10°C-40°C	SAE 10W 30 CD	1.9 l	50 hours	50 hours	1205001
Transmission/Hydraulic Oil	Dextron II ATF	7.1 l	800 hour	800 hours	54-0110
Air Cleaner	Clean Every 25 hours			200 hours	4708303
Fuel/Fuel Filter	Unleaded	26.5 l		400 hours	18-520
Strainer	—	—	Clean 800 hours		87-3990

FOR HEAVY DUTY OPERATION, MAINTENANCE SHOULD BE PERFORMED TWICE AS FREQUENTLY

Maintenance Schedule

Minimum Recommended Maintenance Intervals

Maintenance Procedure	Maintenance Interval& Service				
	Every 50 hours	Every 100 hours	Every 200 hours	Every 400 hours	Every 800 hours
Check battery fluid level					
Check battery cable connections					
Lubricate engine prefilter					
†Change engine oil and filter					
Lubricate all grease fittings					
Remove engine shrouds, clean fins					
Inspect the condition and wear of tires					
Inspect cooling system hoses					
‡Check cable adjustments					
‡Check pump drive belt tension					
Replace the air filter					
Check engine RPM (idle and full throttle)					
‡Torque the wheel lug nuts					
Check front wheel alignment					
Inspect service and parking brakes					
Inspect fuel lines					
Replace the fuel filter					
‡Replace the transaxle filter					
Change the transaxle oil					
Clean the transaxle strainer					
Pack the front wheel bearings					
Replace the spark plugs					

† Initial break in at 5 hours
‡ Initial break in at 50 hours

Replace all interlock switches
Drain and flush the fuel tank
Change the brake fluid

Annual Recommendations
Items are recommended every 1200 hours or 2 years, whichever occurs first.

GREASING BEARINGS AND BUSHINGS

The vehicle has (33) grease fittings that must be lubricated regularly with No. 2 General Purpose Lithium Base Grease. If the machine is operated under normal conditions, lubricate all bearings and bushings after every 100 hours of operation. More frequent lubrication is required if used for heavy duty vehicle operations.

The grease fitting locations and quantities are: Tie rod ends (4) (Fig. 11), Front ball joints (4) (Fig. 11), Rear drive shafts (6) (Fig. 12), Steering shaft (1) (Fig. 13), Front pivot bushings (2) (Fig. 14) and Pedal pivots (4) (Fig. 15).

IMPORTANT: When greasing drive shaft universal shaft bearing crosses, pump grease until it comes out of all 4 cups at each cross.

1. Wipe the grease fitting clean so foreign matter cannot be forced into the bearing or bushing.

2. Pump grease into the bearing or bushing.

3. Wipe off excess grease.

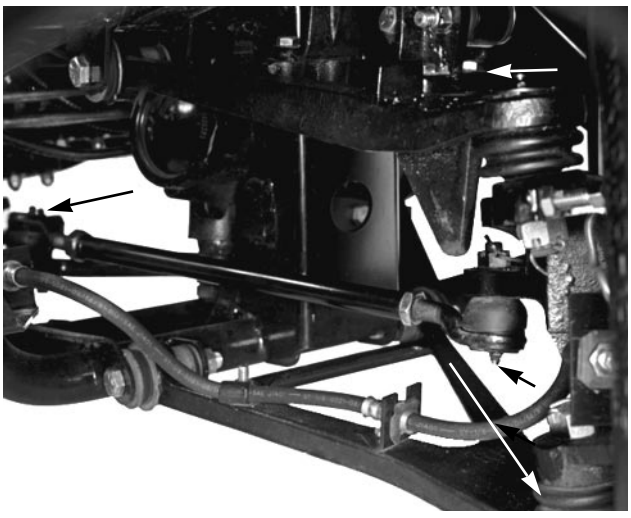

Figure 11

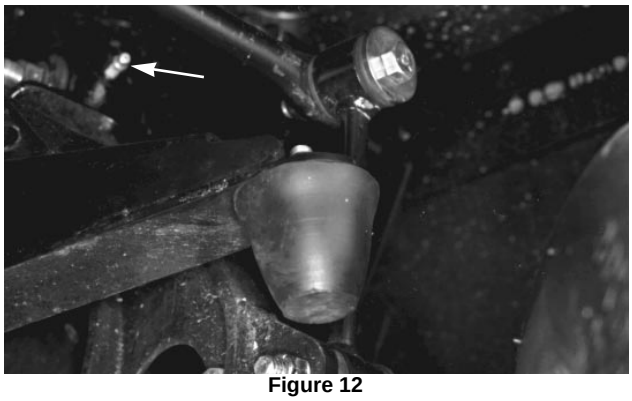

Figure 12



Figure 13

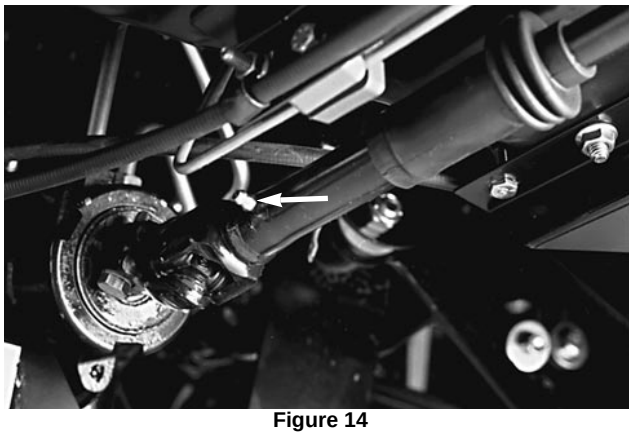

Figure 14

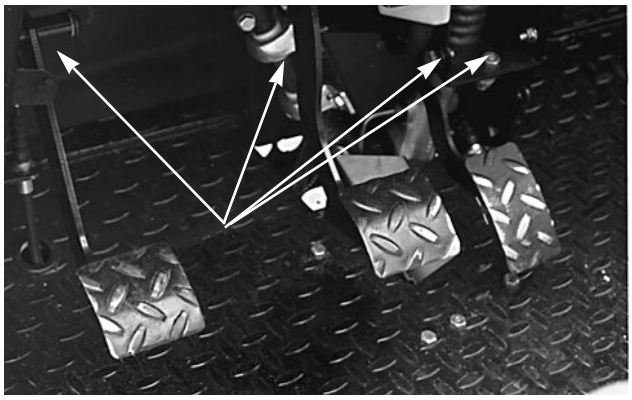

Figure 15

IMPORTANT

Heavy Duty Operation

If the vehicle is subjected to conditions listed below, maintenance should be performed twice as frequently.

- Desert operation
- Cold climate operation (below 32° F)
- Trailer or 5th wheel towing
- Frequent operation on dusty roads
- Frequent operation under maximum vehicle gross weight
- Construction work
- After extended operation in mud, sand, water or similar dirty conditions, have your brakes inspected and cleaned and drive axle joints greased as soon as possible. This will prevent any abrasive material from causing excessive wear.
- Under frequent heavy duty operating conditions, lubricate all grease fittings and inspect air cleaner daily to prevent excessive wear.

⚠ CAUTION

Only qualified and authorized personnel shall be permitted to maintain, repair, adjust or inspect the vehicle.

Avoid fire hazards and have fire protection equipment present in the work area. Do not use an open flame to check the level or leakage of fuel, battery electrolyte or coolant. Do not use open pans of fuel or flammable cleaning fluids for

Many maintenance procedures require raising and lowering the bed. The following precautions must be taken or serious injury or death could result.

After maintenance is completed, remove the safety support, slide it onto storage stud and lower the bed.

USING THE BED SAFETY SUPPORT

1. Raise the bed until the lift cylinders are fully extended.

2. Remove the bed support from storage stud on top of the back rest support channel on the Workman (Fig. 16).

⚠ WARNING

Before servicing or making adjustments to the machine, stop the engine, set the parking brake and remove key from the ignition switch. Any load material must be removed from bed or other attachment before working under raised bed. Never work under a raised bed without positioning safety support on a fully installed cylinder rod. Always rotate the safety support to the down position before working under the raised bed.

3. Push the bed support onto the cylinder rod, making sure support end tabs rest on the end of the cylinder barrel and on cylinder rod end (Fig. 17).

4. To store the bed support, remove bed support from cylinder and insert on stud on top of back rest support channel.

5. Always install or remove bed support from outside of bed.

6. Do not try to lower bed with bed safety support on cylinder.

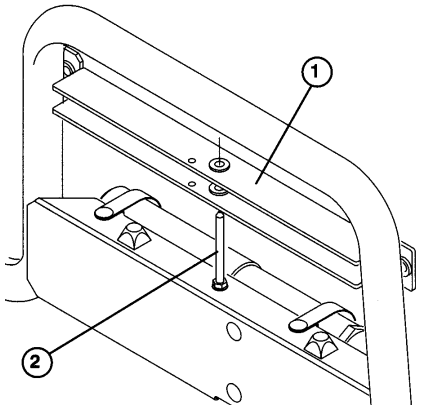

Figure 16

1. Bed support
2. Storage stud

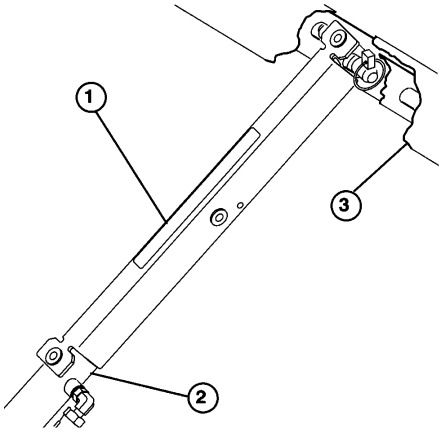

Figure 17

1. Bed support
2. Cylinder barrel
3. Bed

JACKING THE VEHICLE

1. Do not start the engine while the vehicle is on jack, because engine vibration or wheel movement could cause the vehicle to slip off jack.

2. Do not work under the vehicle without jack stands supporting it. The vehicle could slip off jack, injuring any one beneath it.

3. The jacking point at the front of the vehicle is under the front center frame support and at the rear it is under the axle tube.

4. When jacking up front of the vehicle, always place a 50 x 100mm block (or similar material) between the jack and vehicle frame.



Figure 18

1. Front jacking point

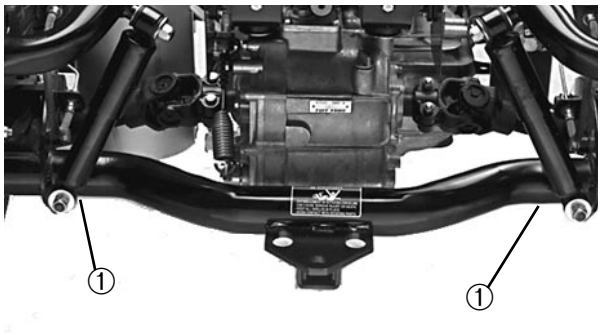

Figure 19

1. Rear jacking points

Locations For Selected Maintenance Procedures

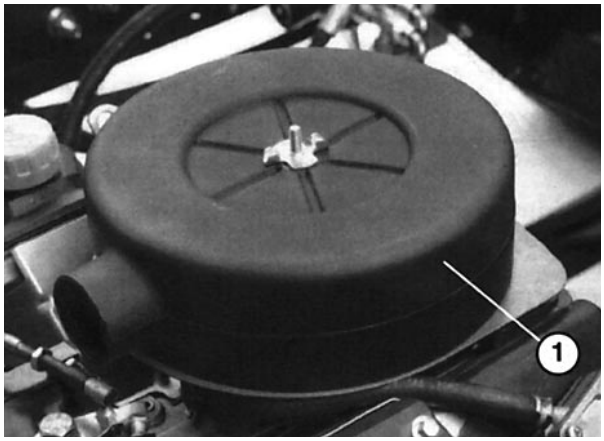

Figure 20

1. Air cleaner cover

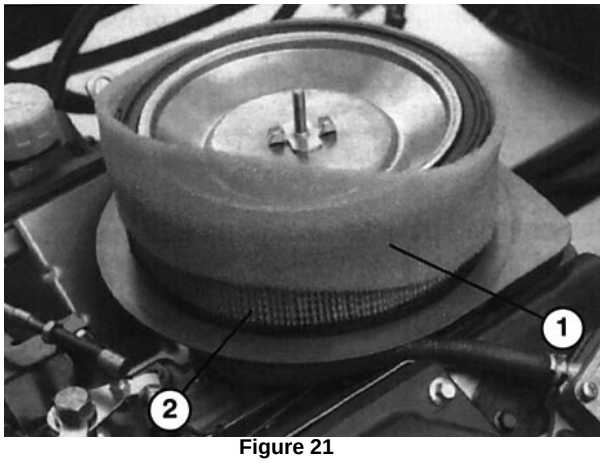

Figure 21

1. Pre-cleaner
2. Paper element

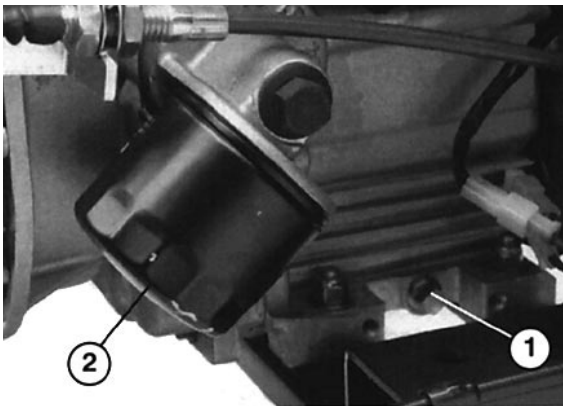

Figure 22

1. Engine oil drain plug
2. Engine oil filter

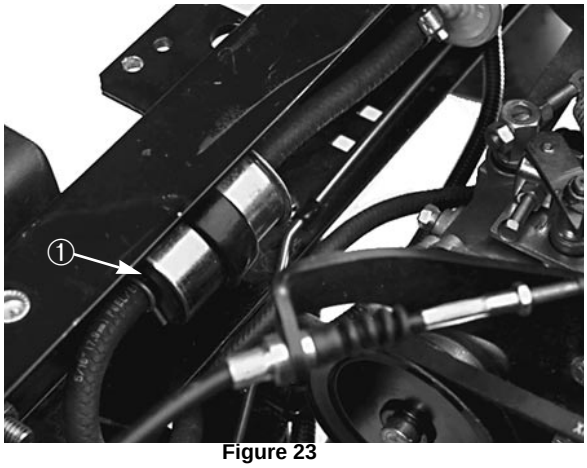

Figure 23

1. Fuel filter

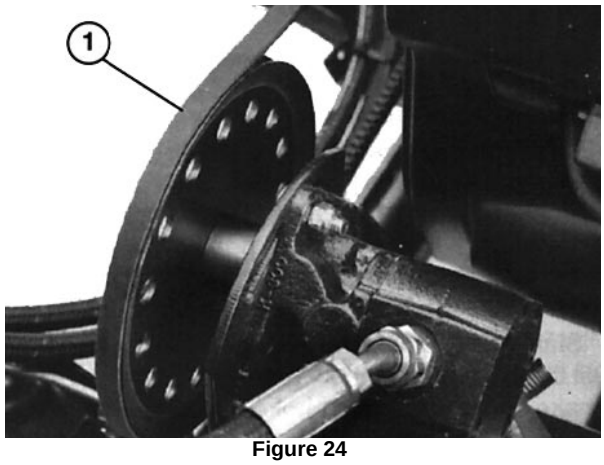

Figure 24

1. Pump belt

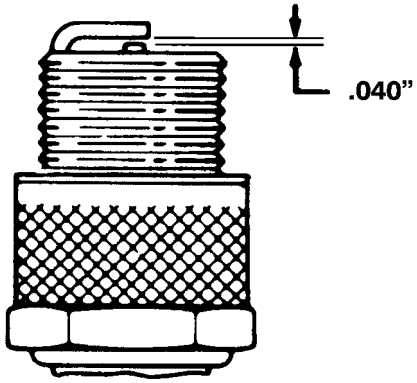

Figure 25

CHANGING THE TRANSAXLE/ HYDRAULIC FLUID

Change the transaxle hydraulic fluid, filter and clean the strainer every 600 hours.

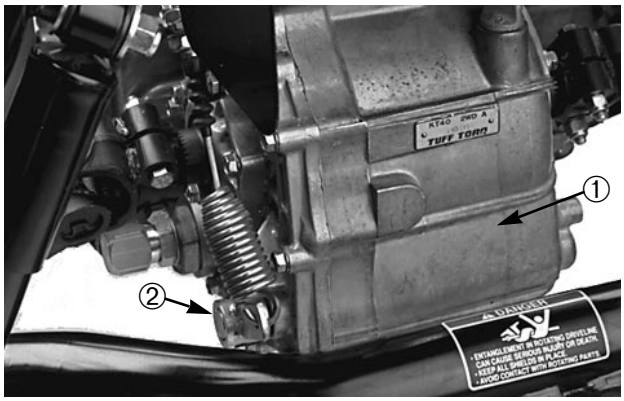

Figure 26

1. Hydraulic reservoir
2. Drain plug

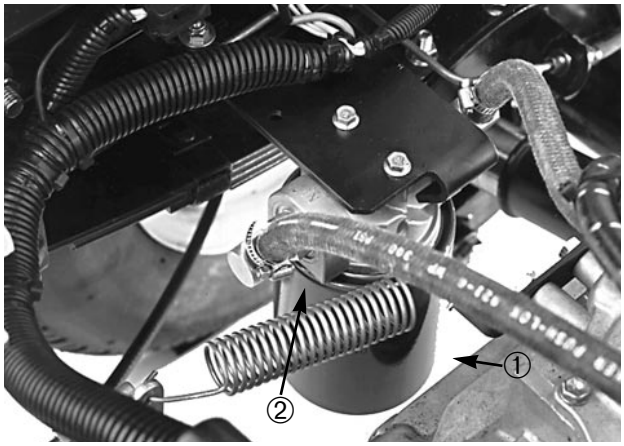

Figure 27

1. Hydraulic filter
2. Gasket

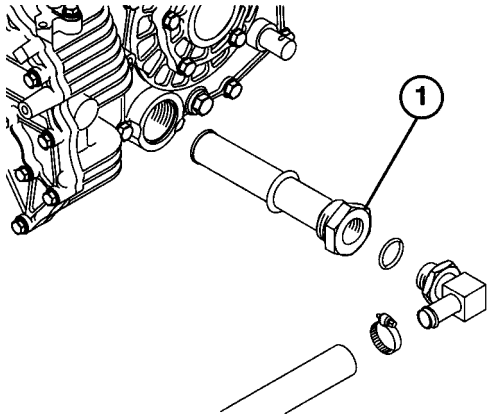

Figure 28

1. Hydraulic strainer

FRONT WHEEL TOE-IN

After every 600 operating hours or annually, check front wheel toe-in.

1. Measure center-to-center distance (at axle height) at front and rear of steering tires. Front measurement must be equal to the rear measurement 3mm.

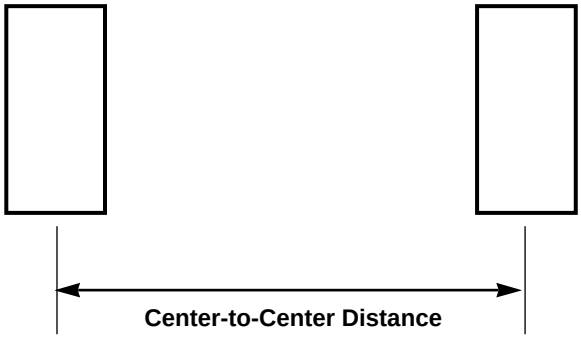

Figure 29

2. To adjust, loosen jam nuts at both ends of tie rod.

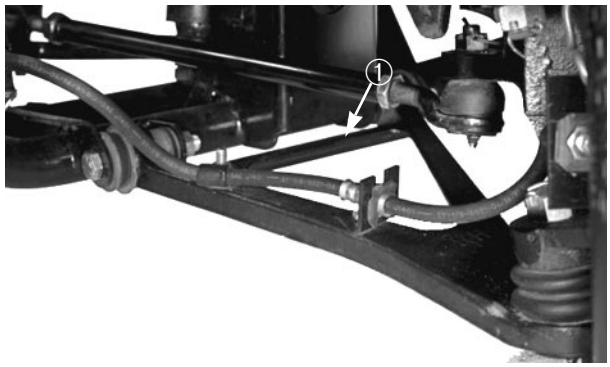

Figure 30

1. Tie rod

3. Rotate tie rod to move front of tire inward or outward.

4. Tighten tie rod jam nuts when adjustment is correct.

EMERGENCY BOX RAISING (without starting the engine)

The box can be raised in an emergency by cranking starter and holding lift lever. Run starter for 10 seconds then wait 60 seconds before engaging starter again.

If the engine will not crank, the load and box (attachment) must be removed to service the engine or transaxle.

FUSES

There are three fuses in the machine's electrical sys-

tem. They are located under right side of dash panel.

FUSES

OPEN —
LIGHTS & HORN 10A
IGNITION
7.5A
DASH
7.5A

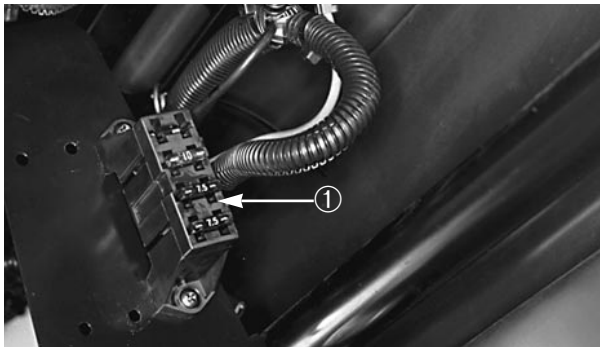

Figure 31

1. Fuse block

JUMP STARTING PROCEDURE

WARNING

Jump starting can be dangerous. To avoid personal injury or damage to electrical components in the vehicle, observe the following warnings:

- Never jump start with a voltage sources greater than 15 volts D.C. This will damage the electrical system.
- Never attempt to jump start a discharged battery that is frozen. It could rupture or explode during jump starting.
- Observe all battery warnings while jump starting your vehicle.
- Be sure your vehicle is not touching the jump start vehicle.
- Connecting cables to the wrong post could result in personal injury and/or damage to the electrical system.

1. Loosen knobs securing battery cover to battery base and slide cover off.

2. Connect a jumper cable between the positive posts of the two batteries. The positive post may be identified by a “+” sign on top of battery cover.

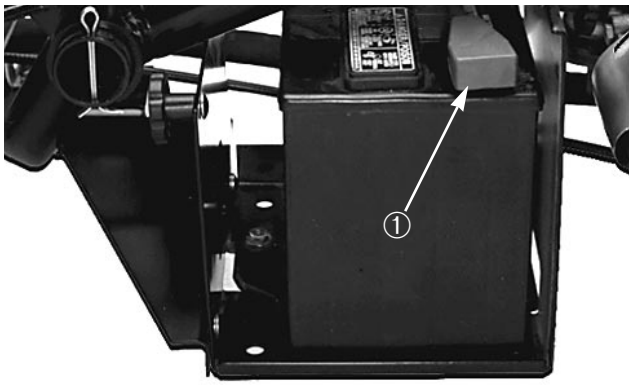

Figure 32

1. Positive (+) cable

3. Connect one end of the other jumper cable to the negative terminal of the battery in the other vehicle. The negative terminal has “NEG” on the battery cover. Do not connect the other end of the jumper cable to the negative post of the discharged battery. Connect it to the engine. Do not connect the jumper cable to the fuel system.

4. Start the engine in the vehicle providing the jump start. Let it run a few minutes, then start your engine.

5. Remove the negative jumper cable first from your engine, then the battery in the other vehicle.

6. Reinstall battery cover to battery base and tighten knobs.

IDENTIFICATION AND ORDERING

MODEL AND SERIAL NUMBERS

The WORKMAN® has two identification numbers: a model number and a serial number. These numbers are stamped into a plate located on the right frame member under dash. In any correspondence concerning the unit, supply the model and serial numbers to ensure correct information and replacement parts are obtained.

To order replacement parts from an authorized TORO Distributor, supply the following information:

1. Model and serial numbers.

2. Part number, description, and quantity of parts desired.


TORO®