FORM NO. 3315—327 Rev. A

TORO

PART NO. 83—6890

INSTALLATION INSTRUCTIONS

SCRAPER/COMB KIT

REELMASTER® 223D, 5100D & 5300D

1. Remove capscrew, flatwasher and locknut securing lift arm chain to cross tube on each rear cutting unit.

2. Loosen nuts securing reel drive motors to cutting units and remove motors.

3. Remove a thrust washer, flatwasher, lockwasher and capscrew securing each carrier frame pivot shaft to lift arm pivot tubes. Slide cutting units away from traction unit.

4. Remove the capscrew and lockwasher securing each end of cutting unit support tube to side plates of cutting unit.

5. Remove capscrews and locknuts securing front roller height—of—cut brackets to sideplates.

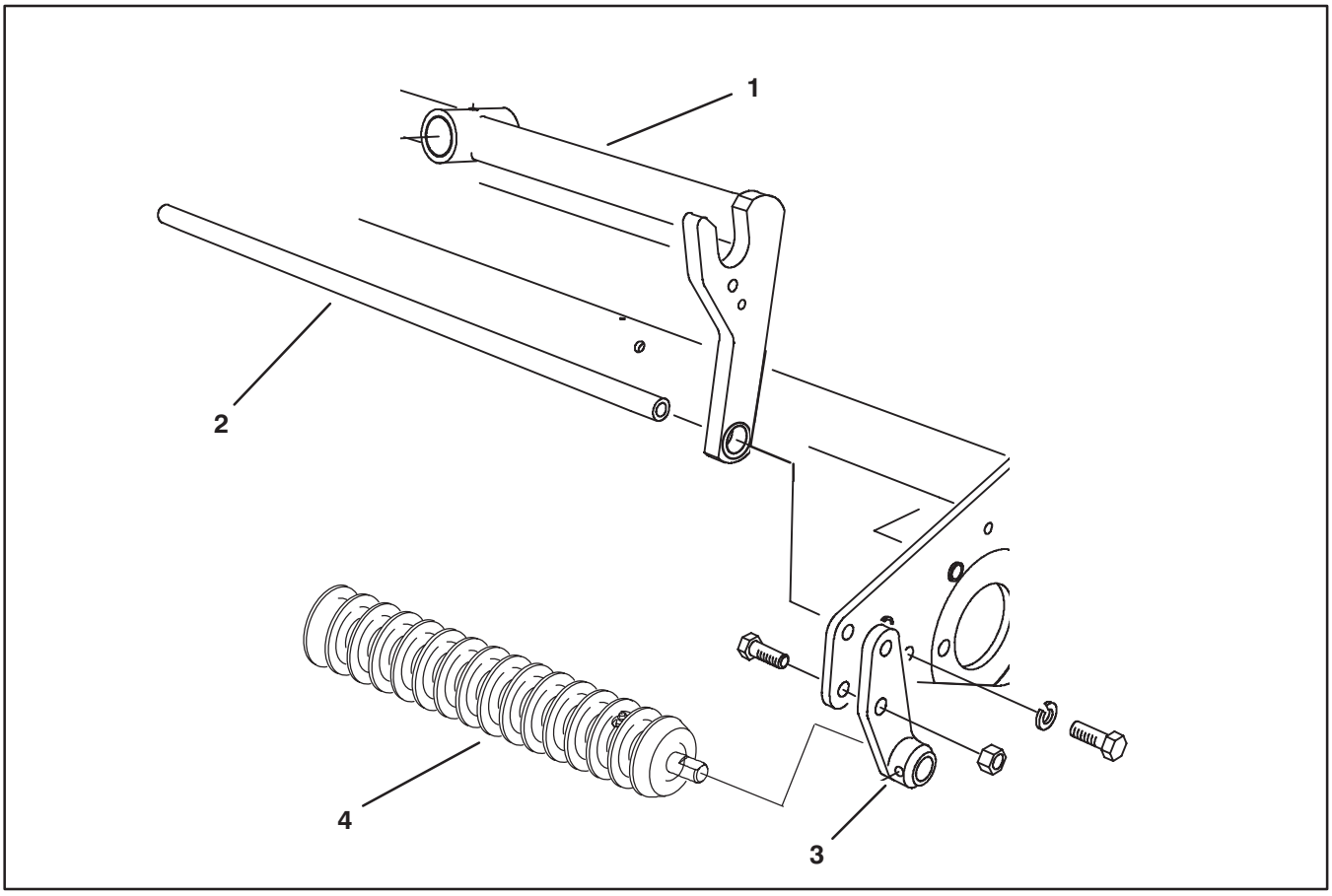

Figure 1

1. Carrier Frame
2. Support Tube
3. Roller Height—of—cut Brackets
4. Roller (Shown Removed)

6. Rotate front roller and brackets 180 degrees to move roller farther away from cutting unit. Remount brackets to sideplates (Fig. 2).

7. Install new carrier frame and right and left hand scraper brackets with support tube, capscrews and lockwashers previously removed. Position carrier frame and scraper brackets as shown in figure 2.

8. Remove basket guides or basket brackets (if so equipped) from old carrier frame and reinstall on new carrier frame.

9. Loosely secure scraper to scraper brackets with (2) capscrews, flatwashers and locknuts.

© The TORO Company — 1992, Rev. 1995

TPS

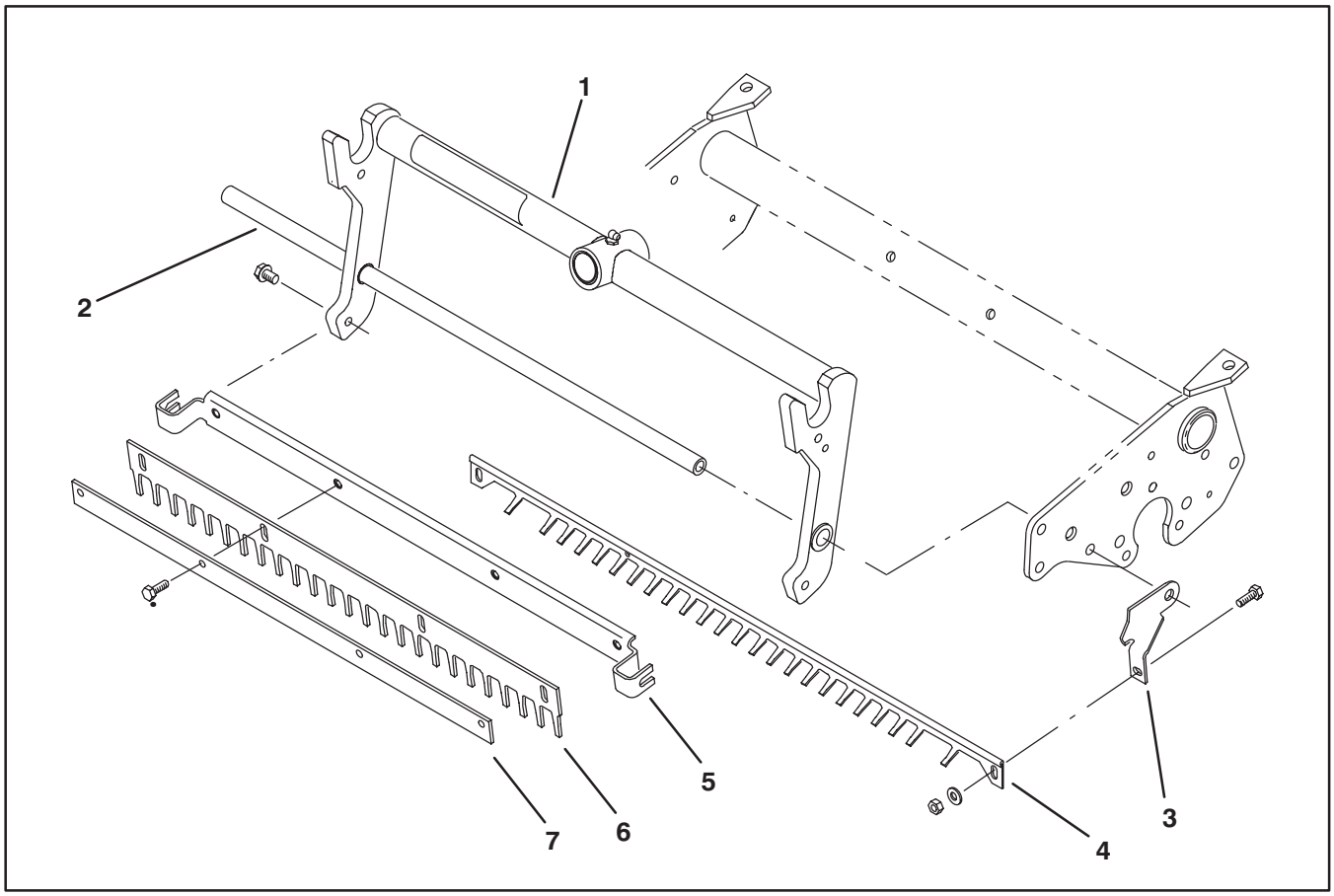

Figure 2

1. Carrier Frame
2. Support Tube
3. Roller Height—of—cut Brackets
4. Scraper
5. Comb Support
6. Comb
7. Comb Plate

10. Adjust scraper so teeth are centered between the disks of the roller and clear center of roller by approximately 1/32", then tighten capscrews.

11. Mount comb support to carrier frame with (2) flange head screws (Fig. 2). Comb support to be mounted with front holes toward the top. **When mounting comb support, make sure it is positioned as far as possible onto flange head screws so it bottoms out on carrier frame.**

12. Loosely secure comb and comb plate to comb support with (2) capscrews (Fig. 2).

13. To adjust the aggressiveness of the comb teeth, proceed as follows:

A. Adjusting the comb teeth so they touch the adjusting gauge bar gives you an aggressive setting.

B. Adjusting the comb teeth so they are midway between the adjusting gauge bar and the cutting edge of the bedknife will give you a medium setting.

C. Adjusting the comb teeth so they are even with the cutting edge of the bedknife will give you a light setting.

D. Tighten capscrews when desired adjustment has been achieved.

14. Remount carrier frames to lift arms and reel motors to cutting units. Secure lift arm chains to rear cutting unit cross tubes.