Form No. 3450-684 Rev A

TORO®

Count on it.

Parts Catalog

Trans Pro 200

Tow-Behind Trailer

Model No. 04239—Serial No. 410000000 and Up

Register at www.Toro.com.
Original Instructions (EN)

CE

3450-684 A

Ordering Replacement Parts

To order replacement parts, please supply the part number, the quantity, and the description of each part desired.

Understanding Reference Numbers

Each identified part in an illustration has a reference number. The reference number for a part also appears in the parts list, along with other information about the part.

This catalog uses two special reference number formats, one to indicate parts in a service assembly and another to indicate the quantity of a given part in an illustration.

Service Assembly Reference Numbers

Parts in service assemblies have reference numbers in the form a:b. The a represents the reference number of the entire service assembly and the b represents a sequential number unique to each part within the service assembly.

For example, a wheel assembly might be identified by reference number 6, the tire by 6:1, the valve by 6:2, and the wheel by 6:3. When you order the assembly identified by reference number 6, you receive all parts identified by reference numbers 6:1,6:2, and 6:3. However, you may also order any part individually. Reference numbers of this type appear in illustration and in parts lists.

Reference Numbers Indicating Quantity

In an illustration, if a reference number indicates more than one part, the reference number has the form nX y. The n represents the quantity of the part, the X is the multiplication symbol, and the y represents the reference number.

For example, in an illustration, the reference number 2X 37 means that two of the parts identified by reference number 37 are indicated.

Contents

Pull Frame Assembly 4
Tongue Assembly 5
Attachments and Accessories 6

© 2021—The Toro® Company
8111 Lyndale Avenue South
Bloomington, MN 55420

Contact us at www.Toro.com.
Printed in the USA.
All Rights Reserved

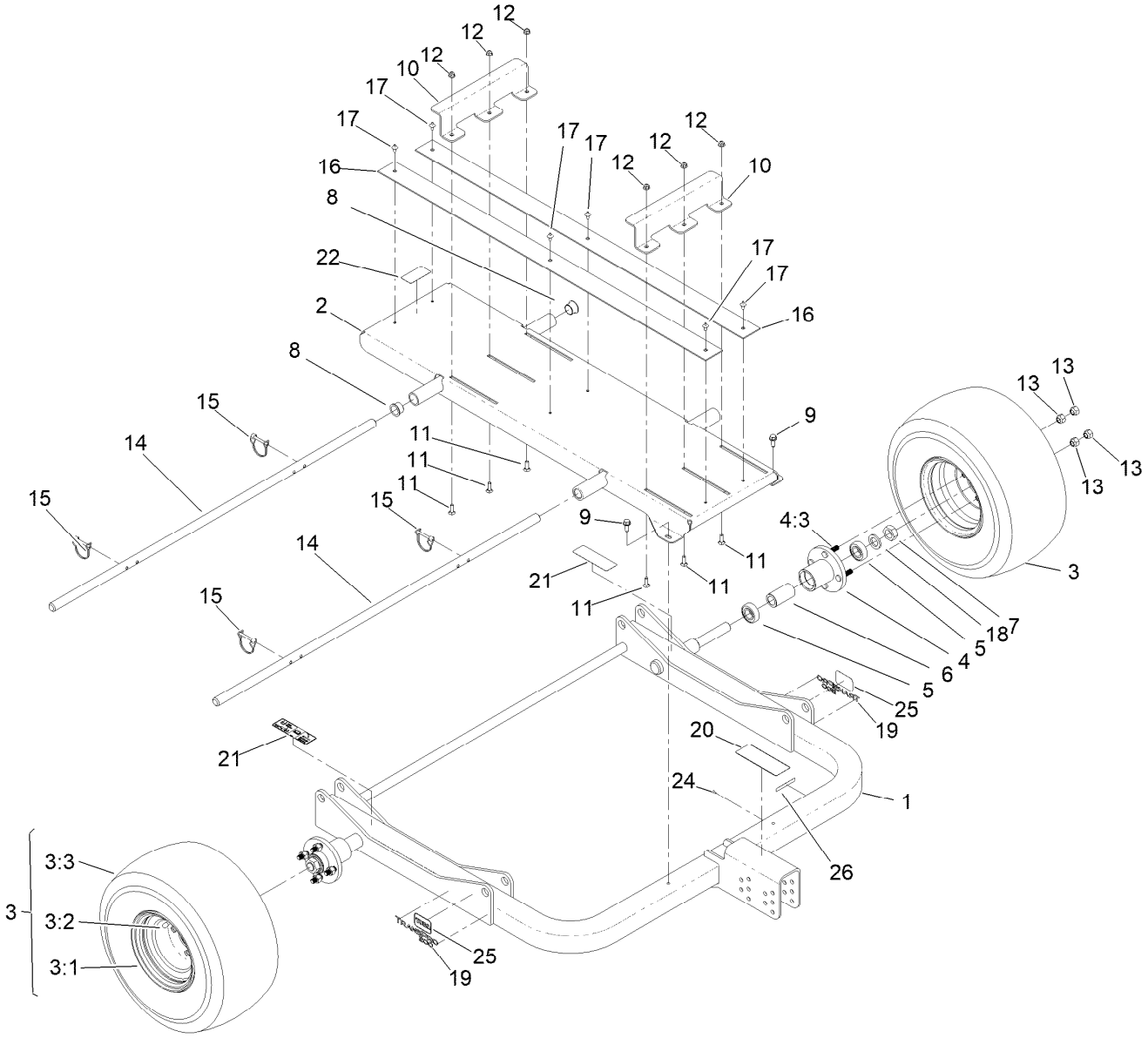

Pull Frame Assembly

Ref.	Part Number	Qty.	Description
1	140-7592SP	1	Frame-Main
2	140-9612SP	1	Support-Center
3	144-3664	2	Wheel-Assembly
3:1	137-2597	1	Rim
3:2	232-27	1	Stem-Valve
3:3	144-3665	1	Tire
4	144-5661	2	Wheel Hub ASM
4:3	114-3918	4	Stud-Wheel
5	251-82	4	Bearing-Ball
6	144-5662	2	Spacer-Bearing
7	3296-49	2	Nut-Lock, NI
8	126-1492	2	Bearing-Flanged
9	126-1696	2	Screw-HWHTF
10	140-7570-03	2	Mount-Roller
11	3230-22	6	Screw-CARR

Ref.	Part Number	Qty.	Description
12	104-8300	6	Nut-HF, NI
13	242-50	8	Nut-Lug
14	140-9689	2	Rod-Support
15	100-1663	4	Pin-Hitch
16	140-5266	2	Pad-Strip, Roller
17	144-5679	6	Rivet-Drive
18	86-1480	2	Washer
19	138-9738	2	Decal, Transpro 200
20	140-5279	1	Decal-Danger
21	140-5280	2	Decal-Tire Pressure, Torque
22	140-5281	1	Decal-Warning, No Riders
24	3290-271	2	Rivet-Pop
25	125-8214	2	Decal-Toro Logo
26	133-8061	1	Decal-Warning

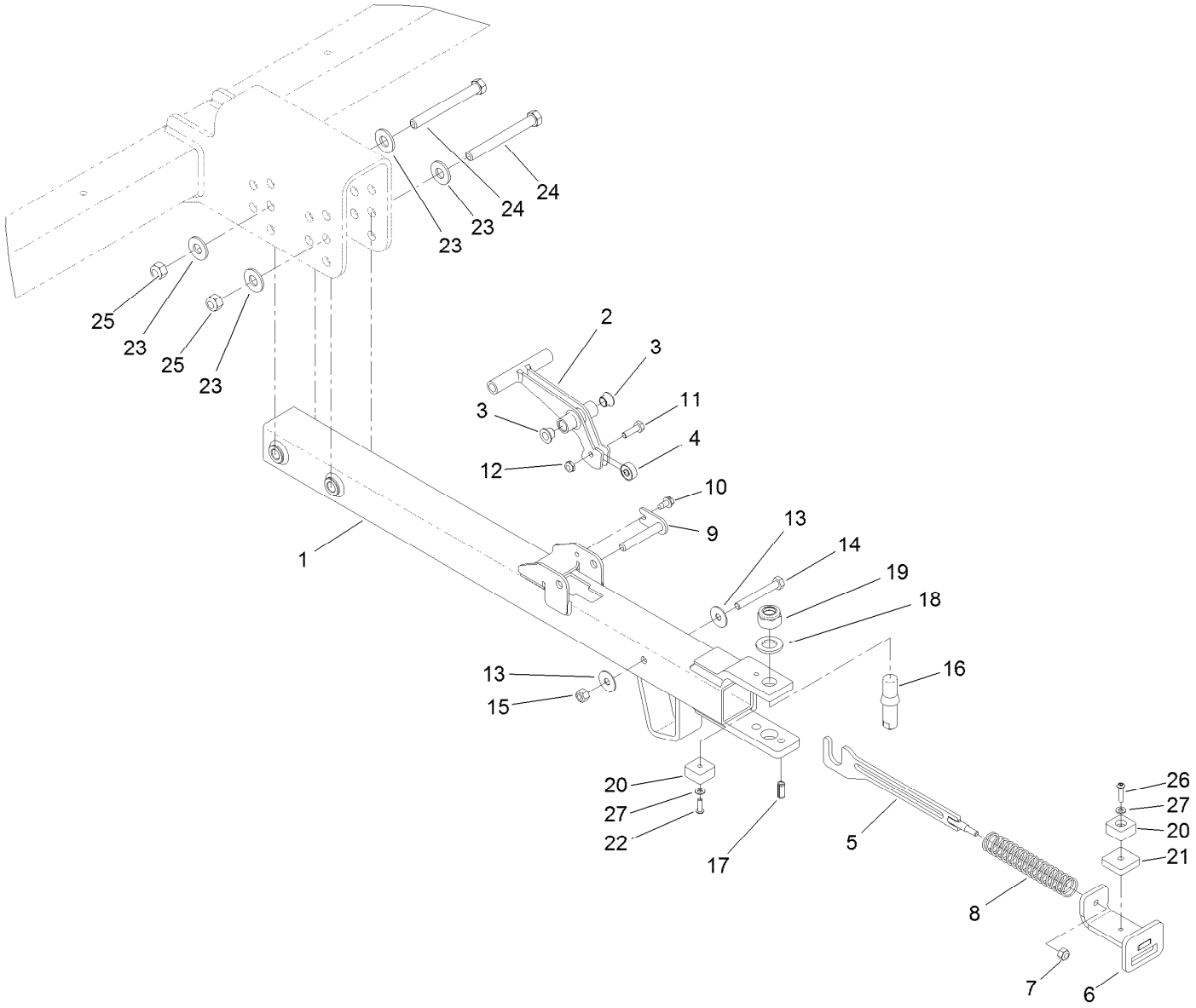

Tongue Assembly

Ref.	Part Number	Qty.	Description
1	140-7504-01	1	Hitch [red]
2	140-7510	1	Handle
3	137-2374	2	Bushing-Flange
4	117-8772	1	Bearing-Ball
5	140-7507	1	Lever ASM,
6	132-4775-01	1	Bracket-Slide
7	3296-42	1	Nut-Lock, NI
8	144-5654	1	Spring-Compression
9	140-7513	1	Pin Flag
10	120-9551	1	Screw-HWH
11	321-5	1	Screw-HH
12	3296-56	1	Nut-Lock, NI
13	108-4925	2	Washer
14	322-12	1	Screw-HH

Ref.	Part Number	Qty.	Description
15	3296-29	1	Nut-Lock, NI
16	127-5861	1	Pin-Tow
17	32121-123	1	Pin-Roll
18	09491	1	Washer-Plain
19	09456	1	Nut
20	94-1392	2	Pad-Rubber
21	140-7503	1	Plate-Spacer
22	119-7568	1	Screw-HSBH
23	29-8910	6	Washer
24	120-0922	2	Screw-HH
25	3296-76	2	Nut-Lock, NI
26	119-7577	1	Screw-BHCS
27	3256-51	2	Washer-Flat

Attachments and Accessories

For 04239 Trans Pro 200 Tow-Behind Trailer

Product Name	Model/Part
Kit-Axle, GR1000	144-5663
Kit-Axle, Flex 2120	144-5664
Kit-Axle, Flex 18/21	144-5668
Kit-Wheel, Bogey	145-0058

Notes:



Count on it.