FORM NO. 3318-410 GB Rev A

TORO®

MODEL NO. 04060—60001 & UP
MODEL NO. 04060TE—60001 & UP

OPERATOR'S MANUAL

GREENSMASTER® 1600



© 1996 The Toro Company

FOREWORD

The GREENSMASTER 1600 was developed to provide an efficient, trouble-free method of mowing high quality-turf on the finest greens. The latest concepts of engineering, design and safety have been incorporated into this machine, along with the highest quality parts and workmanship. Excellent service will be derived if proper operation and maintenance practices are followed.

Safety, mechanical and some general information in this manual are emphasized. DANGER, WARNING and CAUTION identify safety messages. Whenever the triangle safety symbol appears, it is followed by a safety message that must be read and understood. For more details concerning safety, read the safety instructions on pages 3 and 4. IMPORTANT identifies special mechanical information and NOTE identifies general information worthy of special attention.

If help about operation or safety is ever needed, contact your local Authorized TORO Distributor. In addition to genuine TORO replacement parts, the distributor also has optional equipment for the complete line of TORO turf care equipment. Keep your Toro all TORO. Buy genuine TORO parts and accessories.

TABLE OF CONTENTS

SAFETY INSTRUCTIONS 3-5

SAFETY AND INSTRUCTION DECALS 6

SPECIFICATIONS 9

PREPARATION BEFORE OPERATING 10
Add Engine Oil 10
Fill Fuel Tank 10
Leveling Rear Drum To Reel 11
Adjust Bedknife To Reel 11
Adjust Height Of Cut 12
Adjust Grass Shield Height 12
Adjusting Cut-off Bar 13
Install Grass Basket 13
Check Operation of Interlock Switch 13

CONTROLS 14

OPERATING INSTRUCTIONS 17
Starting and Stopping 17
Transport Operation 17
Preparing To Mow 17
Mowing Operation 17
Prior To Mowing 18
Method Of Mowing 18
Control Operation 18
After Mowing 18

MAINTENANCE 19

IDENTIFICATION AND ORDERING 22

Safety

Training

1. Read the instructions carefully. Be familiar with the controls and the proper use of the equipment.

2. Never allow children or people unfamiliar with these instructions to use the lawn mower. Local regulations may restrict the age of the operator.

3. Never mow while people, especially children, or pets are nearby.

4. Keep in mind that the operator or user is responsible for accidents or hazards occurring to other people or their property.

5. Do not carry passengers.

6. All drivers should seek and obtain professional and practical instruction. Such instruction should emphasize:
   - the need for care and concentration when working with ride-on machines;
   - control of a ride-on machine sliding on a slope will not be regained by the application of the brake. The main reasons for loss of control are:
     – insufficient wheel grip;
     – being driven too fast;
     – inadequate braking;
     – the type of machine is unsuitable for its task;
     – lack of awareness of the effects of ground conditions, especially slopes;
     – ##incorrect hitching and load distribution.

Preparation

1. While mowing, always wear substantial footwear and long trousers. Do not operate the equipment when barefoot or wearing open sandals.

2. Thoroughly inspect the area where the equipment is to be used and remove all objects which may be thrown by the machine.

3. **WARNING—Petrol is highly flammable.**
   - Store fuel in containers specifically designed for this purpose.
   - Refuel outdoors only and do not smoke while refueling.
   - Add fuel before starting the engine. Never remove the cap of the fuel tank or add petrol while the engine is running or when the engine is hot.
   - If petrol is spilled, do not attempt to start the engine but move the machine away from the are of spillage and avoid creating any source of ignition until petrol vapors have dissipated.
   - Replace all fuel tanks and container caps securely.

4. Replace faulty silencers.

Operation

1. Do not operate the engine in a confined space where dangerous carbon monoxide fumes can collect.

2. Mow only in daylight or in good artificial light.

3. Before attempting to start the engine, disengage all blade attachment clutches and shift into neutral.

4. Do not use on slopes of more than:
   - Never mow side hills over 5°
   - Never mow uphill over 10°
   - Never mow downhill over 15°

5. Remember there is no such thing as a “safe” slope. Travel on grass slopes requires particular care. To guard against overturning:
   - do not stop or start suddenly when going up or downhill;
   - engage the clutch slowly, and always keep the machine in gear, especially when travailing downhill;
   - machine speeds should be kept low on slopes and during tight turns;

- stay alert for bumps and hollows and other hidden hazards;
- never mow across the face of the slope, unless the lawn mower is designed for this purpose.

6. Use care when pulling loads or using heavy equipment.

- Use only approved drawbar hitch points.
- Limit loads to those you can safely control.
- Do not turn sharply. Use care when reversing.
- Use counterweight(s) or wheel weights when suggested in the instruction handbook.

7. Watch out for traffic when crossing or near roadways.

8. Stop the blades rotating before crossing surfaces other than grass.

9. When using any attachments, never direct discharge of material toward bystanders nor allow anyone near the machine while in operation .

10. Never operate the lawn mower with defective guards, shields or without safety protective devices in place.

11. Do not change the engine governor settings or overspeed the engine. Operating the engine at excessive speeds may increase the hazard of personal injury.

12. Before leaving the operator's position:

- disengage the power take-off and lower the attachments;
- change into neutral and set the parking brake;
- stop the engine and remove the key.

13. Disengage the drive to attachments when transporting or not in use.

14. Stop the engine and disengage the drive to the attachment

- before refueling;
- before removing the grass catcher;
- before making height adjustments unless the adjustment can be made from the operator's position.
- before clearing blockages;
- before checking, cleaning or working on the lawnmower;
- after striking a foreign object. Inspect the lawnmower for damage and make repairs before restarting and operating the equipment.

15. Reduce the throttle setting during engine runout and, if the engine is provided with a shutoff valve, turn the fuel off at the conclusion of mowing.

Maintenance and Storage

1. Keep all nuts, bolts and screws tight to be sure the equipment is in safe working condition.

2. Never store the equipment with petrol in the tank inside a building where fumes may reach an open flame or spark.

3. Allow the engine to cool before storing in any enclosure.

4. To reduce the fire hazard, keep the engine, silencer, battery compartment and petrol storage area free of grass, leaves, or excessive grease.

5. Check the grass catcher frequently for wear or deterioration.

6. Replace worn or damaged parts for safety.

7. If the fuel tank has to be drained, this should be done outdoors.

8. Be careful during adjustment of the machine to prevent entrapment of the fingers between moving blades and fixed parts of the machine.

9. On multi-bladed machines, take care as rotating one blade can cause other blades to rotate.

10. When the machine is to be parked, stored or left unattended, lower the cutting means unless a positive mechanical lock is used.

Sound & Vibration Levels

Sound Levels

This unit has an equivalent continuous A-weighted sound pressure at the operator ear of: 83 dB(A), based on measurements of identical machines per 84/538/EEC.

This unit has a sound power level of 95 dB(A)/1pW, based on measurements of identical machines per procedures outlined in Directive 79/113/EEC and amendments

Vibration Levels

This unit has a vibration level of 10.5 m/s^2 at the posterior, based on measurements of identical machines per ISO 2631 procedures.

Symbol Glossary

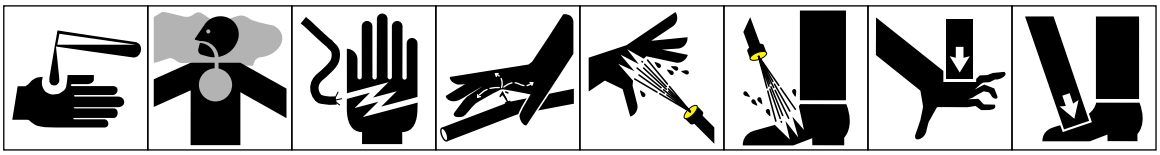

Caustic liquids, chemical burns to fingers or hand | Poisonous fumes or toxic gases, asphyxiation | Electrical shock, electrocution | High pressure fluid, injection into body | High pressure spray, erosion of flesh | High pressure spray, erosion of flesh | Crushing of fingers or hand, force applied from above | Crushing of toes or foot, force applied from above

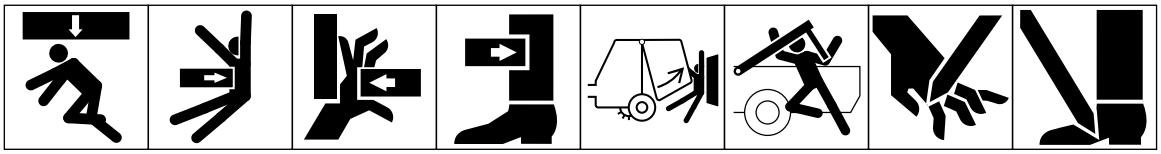

Crushing of whole body, applied from above | Crushing of torso, force applied from side | Crushing of fingers or hand, force applied from side | Crushing of leg, force applied from side | Crushing of whole body | Crushing of head, torso and arms | Cutting of fingers or hand | Cutting of foot

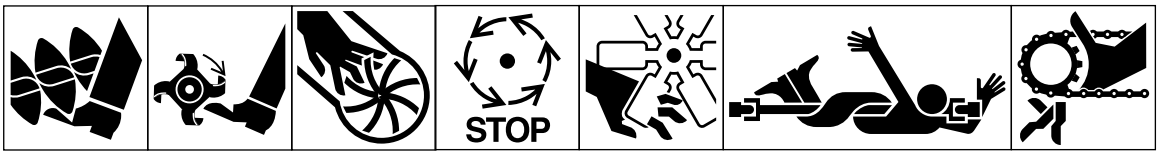

Cutting or entanglement of foot, rotating auger | Severing of foot, rotating knives | Severing of fingers or hand, impeller blade | Wait until all machine components have completely stopped before touching them | Severing of fingers or hand, engine fan | Whole body entanglement, implement input drive line | Fingers or hand entanglement, chain drive

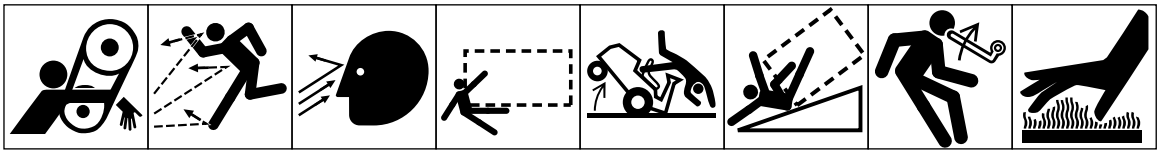

Hand & arm entanglement, belt drive | Thrown or flying objects, whole body exposure | Thrown or flying objects, face exposure | Runover/backover, (relevant machine to appear in dashed box) | Machine tipping, riding mower | Machine rollover, ROPS (relevant machine to appear in dashed box) | Stored energy hazard, kickback or upward motion | Hot surfaces, burns to fingers or hands

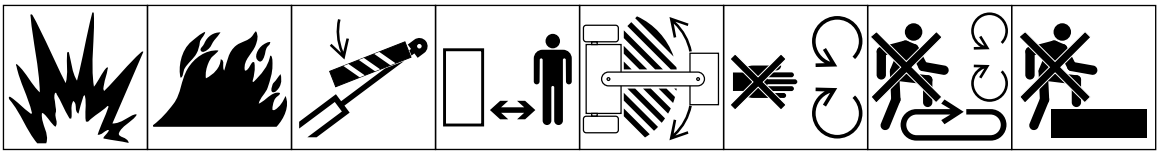

Explosion | Fire or open flame | Secure lifting cylinder with locking device before getting in hazardous area | Stay a safe distance from the machine | Stay clear of articulation area while engine is running | Do not open or remove safety shields while engine is running | Do not step on loading platform if PTO is connected to tractor & engine is running | Do not step

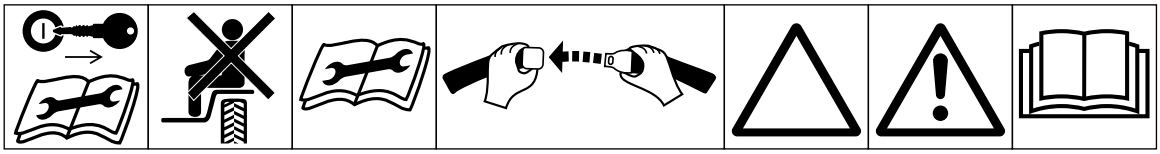

Shut off engine & remove key before performing maintenance or repair work | Riding on this machine is allowed only on a passenger seat & only if the driver's view is not hindered | Consult technical manual for proper service procedures | Fasten seat belts | Safety alert triangle | outline safety alert symbol | Read operator's manual

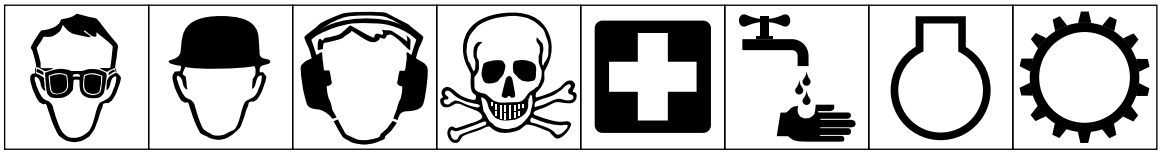

Eye protection must be worn | Head protection must be worn | Hearing protection must be worn | Caution, toxic risk | First aid | Flush with water | Engine | Transmission

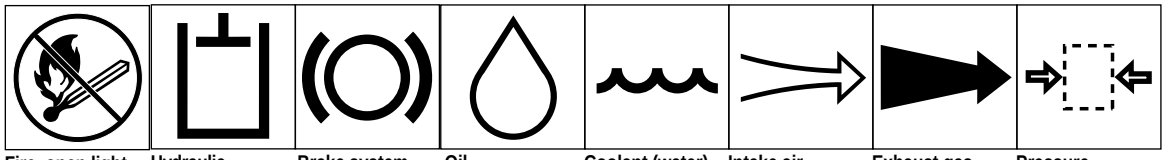

Fire, open light & smoking prohibited | Hydraulic system | Brake system | Oil | Coolant (water) | Intake air | Exhaust gas | Pressure

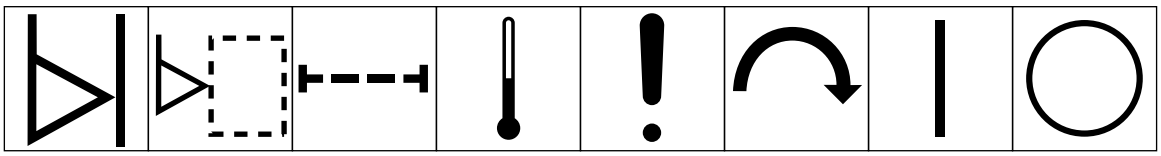

Level indicator | Liquid level | Filter | Temperature | Failure/ Malfunction | Start switch/ mechanism | On/start | Off/stop

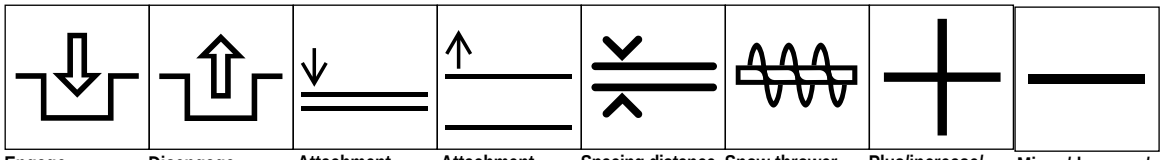

Engage | Disengage | Attachment lower | Attachment raise | Spacing distance | Snow thrower, collector auger | Plus/increase/ positive polarity | Minus/decrease/ negative polarity

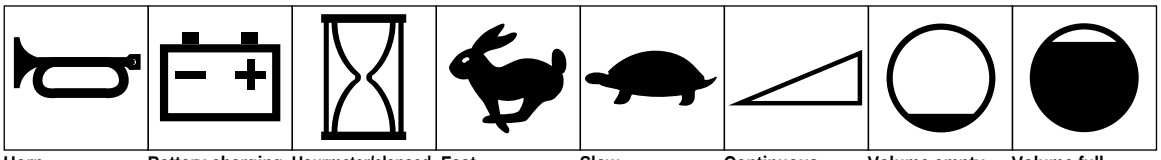

Horn | Battery charging condition | Hourmeter/elapsed operating hours | Fast | Slow | Continuous variable, linear | Volume empty | Volume full

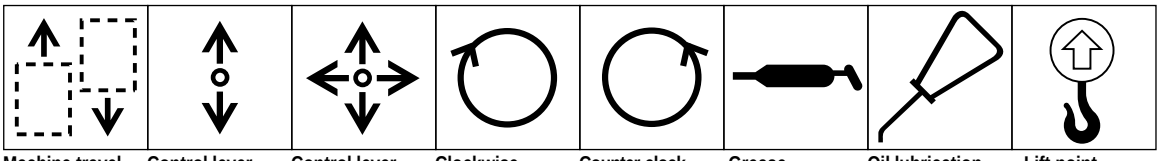

Machine travel direction, forward/rearward | Control lever operating direction, dual direction | Control lever operating direction, multiple direction | Clockwise rotation | Counter-clock-wise rotation | Grease lubrication point | Oil lubrication point | Lift point

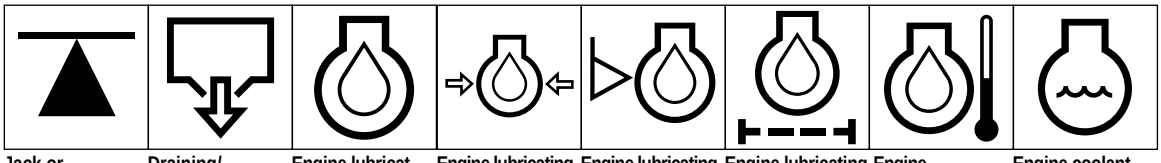

Jack or support point | Draining/ emptying | Engine lubricat-ing oil | Engine lubricating oil pressure | Engine lubricating oil level | Engine lubricating oil filter | Engine lubricating oil temperature | Engine coolant

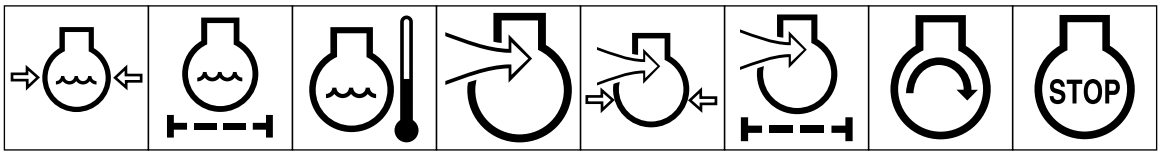

Engine coolant pressure | Engine coolant filter | Engine lubricating oil pressure | Engine intake/ combustion air | Engine intake/ combustion air pressure | Engine intake/ air filter | Engine start | Engine stop

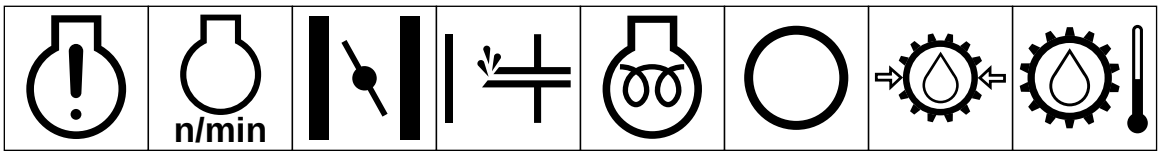

Engine failure/ malfunction | Engine rotational speed/frequency | Choke | Primer (start aid) | Electrical preheat (low temperature start aid) | Transmission oil | Transmission oil pressure | Transmission oil temperature

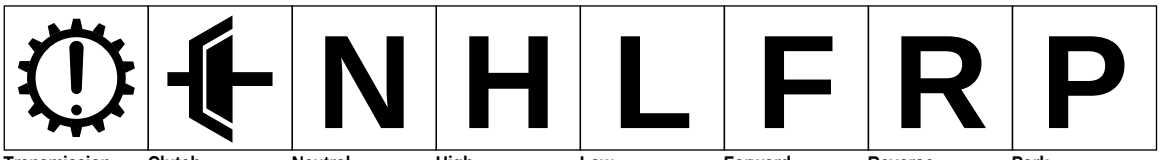

Transmission failure/malfunction | Clutch | Neutral | High | Low | Forward | Reverse | Park

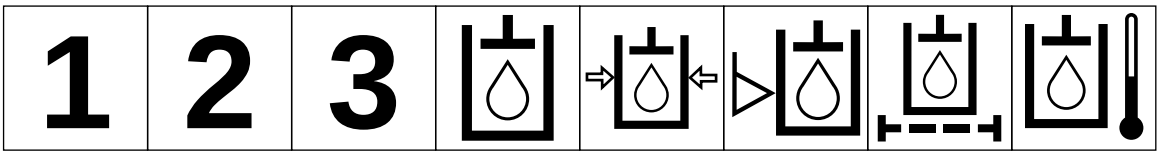

First gear | Second gear | Third gear (other #'s may be used until the maximum # of forward gears is reached.) | Hydraulic oil | Hydraulic oil pressure | Hydraulic oil level | Hydraulic oil filter | Hydraulic oil temperature

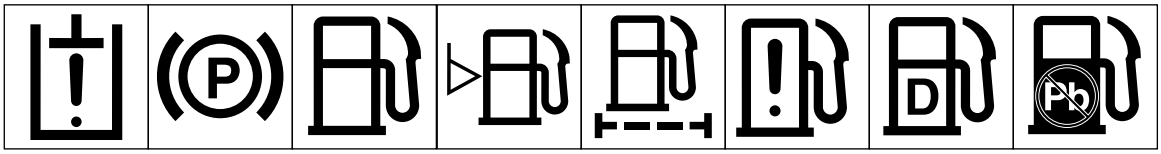

Hydraulic oil failure/malfunction | Parking brake | Fuel | Fuel level | Fuel filter | Fuel system failure/malfunction | Diesel fuel | Unleaded fuel

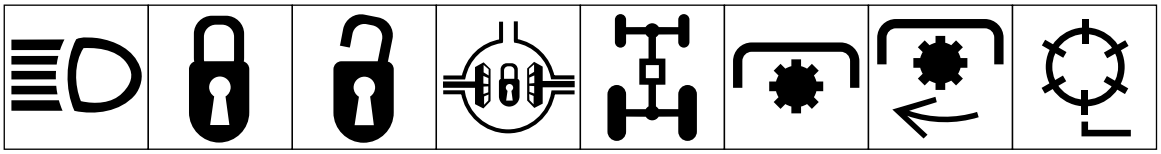

Headlights | Lock | Unlock | Differential lock | 4-Wheel drive | Power Take-Off | Power Take-Off, rotational speed | Reel cutting element

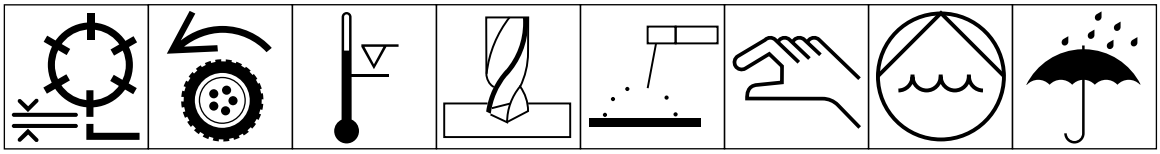

Reel cutting element, height adjustment | Traction | Above working temperature range | Drilling | Manual metal arc welding | Manual | 0356 Water pump | 0626 Keep dry

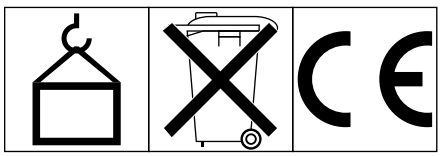

0430 weight | Do not dispose in the garbage | CE logo

Specifications

Engine: Kawasaki, air cooled, overhead valve, 4 cycle, 2.76 kW (3.7 hp), 2.36” x 1.73” bore and stroke, 7.57 cu. in. (124 cc) displacement, 8.4:1 compression ratio, 14.9 nM (11 ft. lbs.) @ 1400 rpm. Electronic ignition, maximum noise suppression muffler. 2.5 l (2.64 quart) fuel tank capacity.

Traction Drive: Engine to countershaft drive: two “A” section V belts. Countershaft to differential drive: 5 mm pitch timing belt. Differential to drum drive: 8 mm pitch timing belt.

Differential: Peerless Series 100.

Transport Clutch: Belt idler

Brake: Band drum

Optional Transport Tires: Quick detachable, 3.00/3.25 x 6, 32.5 tread width.

Traction Drum: Dual cast aluminum, 19 cm diameter.

Controls: Engine has recoil starter, ON/OFF switch and choke. Handle has throttle lever, traction engage lever and service/ park brake lever. The mower has reel drive engage lever. Safety devices: neutral interlock system.

Handle: Loop style, (2.5 cm) 1” diameter.

Reel Construction: 12.5 cm diameter, 11 carbon steel blades welded to 5 stamped steel spiders.

Width of Cut: 66 cm

Height of Cut Range: 2.2–12.5mm

Clip: 40.6 cm

Reel Clutch: Jaw Type.

Bedknife and bedbar: Single edged high carbon steel bedknife, induction hardened to Rc 48–55. Fastened to machined, cast iron bedbar. Tournament bedknife (Part No. 63-8560), standard.

Grass Basket: Molded polyethylene.

Dimensions:

Width: 91 cm
Height: 119 cm
Length: 150 cm
Dry Weight: 77.6 kg with basket and Wiehle roller, without wheels or grooming reel.

Preparation Before Operating

ADD ENGINE OIL

Initially, the crankcase must be filled with 47 cl of proper viscosity oil (See chart below). Use any high-quality detergent oil having the American Petroleum Institute (API) "service classification"–MS, or SC.

Temperature	Oil Viscosity
10°C or below	SAE 10W30
10°C to 35°C	SAE 10W30 or 30
Above 35°C	SAE 40

1. Position the mower so the engine is level and clean around the oil level gauge (Fig. 1).

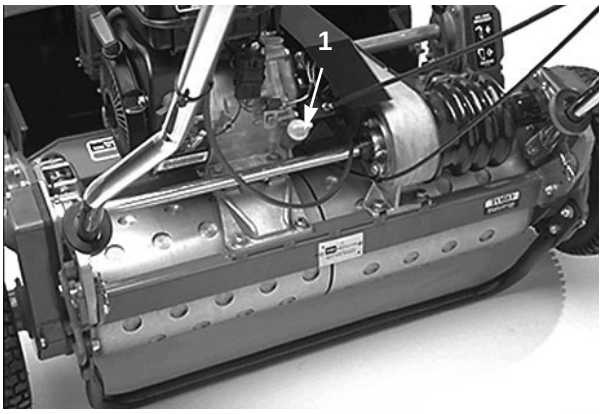

Fig. 1

1. Oil level gauge

2. Remove the gauge by turning it counterclockwise.

3. Wipe the gauge clean and insert it into the filler port. Then remove it and check the level of oil. Do not screw the gauge into the port. If the level is low, add only enough oil to raise the level to the filler opening.

Note: We recommend that the oil level be checked each time the mower is used or after every 5 operating hours. Initially, change the oil after the first 20 hours of operation; thereafter, change the oil after every 50 hours of operation. More frequent oil changes are required in dusty or dirty conditions.

FILL THE FUEL TANK

NOTE: NEVER USE METHANOL, GASOLINE CONTAINING METHANOL, GASOLINE CONTAINING MORE THAN 10% ETHANOL, GASOLINE ADDITIVES, PREMIUM GASOLINE OR WHITE GAS BECAUSE FUEL SYSTEM DAMAGE COULD RESULT.

⚠ DANGER

Because fuel is flammable, caution must be used when storing or handling it. Do not fill the fuel tank while the engine is running, hot or when the machine is in an enclosed area. Vapors may build up and be ignited by a spark or flame source many feet away. DO NOT SMOKE while filling the fuel tank to prevent the possibility of an explosion. Always fill the fuel tank outside and wipe up any spilled fuel before starting the engine. Use a funnel or spout to prevent spilling, and fill the tank no higher than to the bottom of the filter screen. DO NOT OVER FILL.

Store fuel in a clean safety approved container and keep the cap on the container. Keep fuel in a cool, well-ventilated place; never in an enclosed area such as a hot storage shed. To assure volatility, do not buy more than a 30-day supply of gasoline, or a 6-month supply of diesel fuel.

Gasoline is a fuel for internal combustion engines; therefore, do not use it for any other purpose. Since many children like the smell of gasoline, keep it out of their reach because the fumes are explosive and dangerous to inhale.

1. Clean around the fuel tank cap and remove the cap from tank (Fig. 2). Using unleaded gasoline, fill the fuel tank no higher than to the bottom of the filter screen. DO NOT OVER FILL.

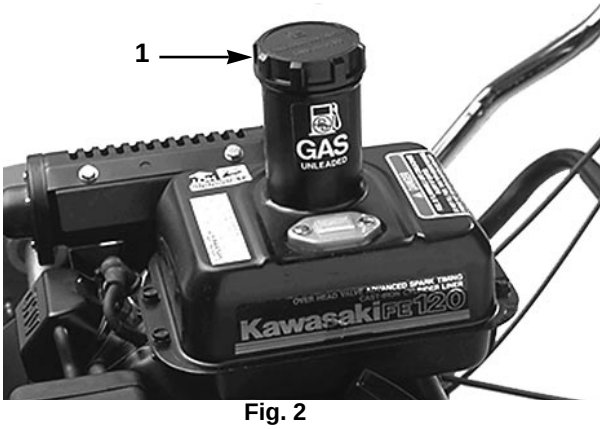

Fig. 2

1. Fuel tank cap

2. Install the fuel tank cap and wipe up any spilled gasoline.

LEVELING THE REAR DRUM TO THE REEL

1. Position the machine on a flat, level surface, preferably a precision steel plate. Place a 1/4" x 1" (.625 x 2.5 cm) flat steel strip, 74 cm long, under the reel blades and against the front edge of the bed knife to prevent the bedbar from resting on the work surface.

2. Raise the front roller so that only the rear drum and the reel are on the surface.

3. Firmly press down on the machine above the reel so all reel blades contact the steel strip.

4. While pressing down on the reel, slide a feeler gauge under one end of the drum, then check the other end of the drum. If there is a gap between the drum and the work surface, greater than .025 cm on either end, an adjustment to the drum is required; go to step 5. If the gap is less than .025 cm no adjustment is required.

5. Remove the rear belt cover from the right side of the machine.

6. Rotate the drive pulley until the holes align with the (4) roller bearing flange screws (Fig. 3).

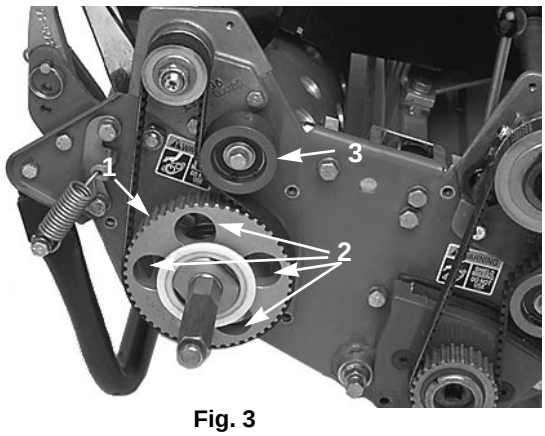

Fig. 3

1. *Drive pulley*
2. Four holes
3. Idler pulley

7. Loosen the four roller bearing screws and the screw securing the idler pulley. Raise or lower the right side of the roller assembly until the gap is reduced to less than .025 cm. Tighten the roller-bearing screws. Adjust belt tension and tighten idler pulley mounting screw (Fig. 4).

ADJUST THE BEDKNIFE TO THE REEL

Bedknife-to-reel adjustment is done by loosening or tightening the bedknife adjusting screws, located on top of the mower.

1. Position the machine on a flat, level work surface. Make sure the reel contact is removed by loosening jam nuts on the bedknife adjusting screws and rotating the adjusting screws counterclockwise (Fig. 4).

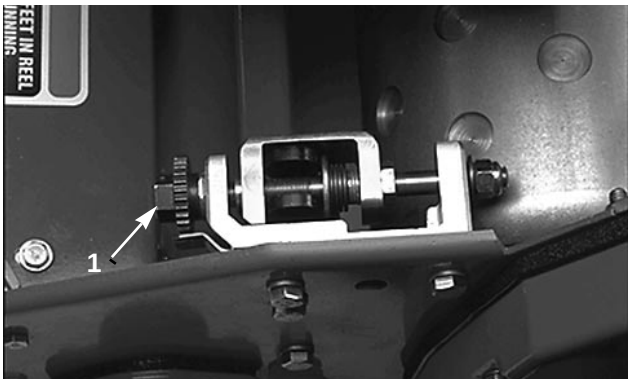

Fig. 4

1. Bedknife adjusting screw

2. Tilt the mower back on the handle to expose the bedknife and reel.

3. On one end of the front side of the reel, insert a long strip of newspaper between the reel and the bedknife (Fig. 5). While slowly rotating the reel forward, tighten the bedknife adjusting screw (on same end of the reel), one flat at a time, until the paper is pinched lightly when inserted from the front, parallel to the bedknife, which results in a slight drag when the paper is pulled (Fig. 4).

Fig. 5

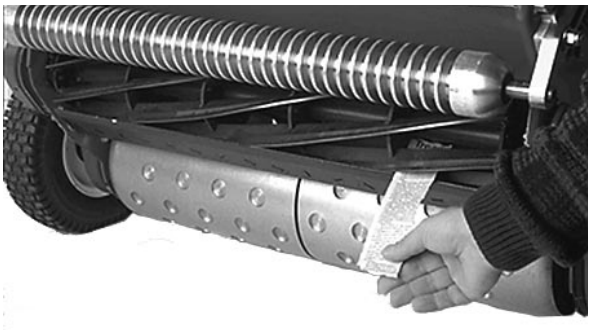

Note: Each time the adjusting screw is rotated one flat, the bedknife moves .003" closer to the reel. **DO NOT OVERTIGHTEN THE ADJUSTING SCREW.**

4. Check for light contact at the other end of the reel using the paper and adjust as required.

5. After adjustment, check to see if the reel can pinch paper when it is inserted from the front and cut paper when inserted at a right angle to the bedknife (Fig. 5). It should be possible to cut paper with minimum contact between the bedknife and the reel blades. Should excessive reel drag be evident, it will be either necessary to backlap or regrind the cutting unit to achieve the sharp edges needed for precision cutting (see the Toro reel sharpening manual).

ADJUST THE HEIGHT OF CUT

1. Verify that the rear roller is level and that the bedknife-to-reel contact is correct. Tip the mower back on its handle to expose the front and rear rollers and the bedknife.

2. Loosen the locknuts securing the height-of-cut brackets to the side plates (Fig. 6).

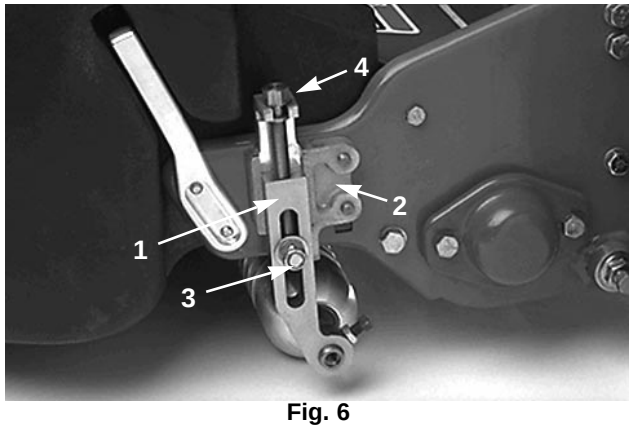

Fig. 6

1. Height-of-cut arm
2. Height-of-cut bracket
3. Locknut
4. Adjusting Screw

3. Loosen the nut on the gauge bar (Fig. 7) and set the adjusting screw to desired height of cut. The distance between the bottom of the screw head and the face of bar is the height of cut.

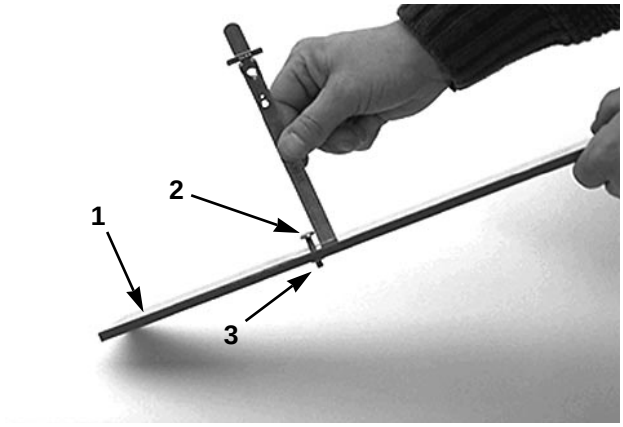

Fig. 7

1. Gauge bar
2. Height adjusting screw
3. Nut

4. Hook the screw head on the cutting edge of the bedknife and rest the rear end of the bar on the rear roller (Fig. 8).

5. Rotate the adjusting knob until the roller contacts the front of the gauge bar. Adjust both ends of the roller until the entire roller is parallel to the bedknife.

IMPORTANT: When set properly, the rear and front rollers will contact the gauge bar and the screw will be snug against the bedknife. This assures height of cut is identical at both ends of the bedknife.

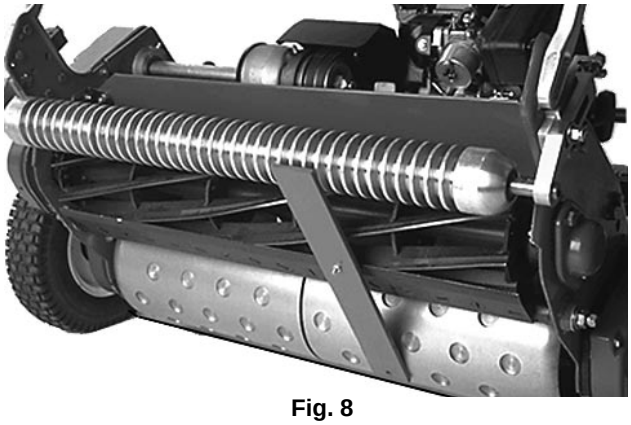

Fig. 8

6. Tighten the nuts at the sides of the height-of-cut brackets to lock adjustment.

   IMPORTANT: To avoid scalping on undulating turf, make sure the roller supports are positioned rearward (roller closer to the reel).

Note: The front roller can be put in three different positions (Fig. 9)) depending on the application and your needs.

- Use the front position when a groomer is installed.
- Use the middle position without a groomer.
- Use the third position in extremely undulating turf conditions.

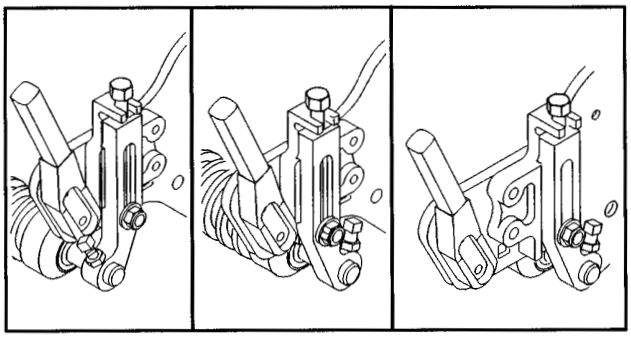

Figure 9

ADJUSTING GRASS SHIELD HEIGHT

Adjust the shield to assure proper grass clipping discharge into the basket.

1. Measure the distance from the top of the front support rod to the front lip of the shield at each end of the cutting unit (Fig. 10).

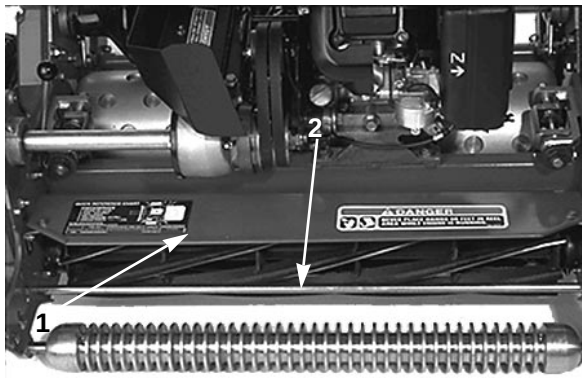

Figure 10

1. Support rod
2. Shield

2. The height of the shield from the support rod for normal cutting conditions should be 4 inches. Loosen the capscrews and nuts securing each end of the shield to the side plate, adjust the shield to its correct height and tighten the fasteners.

Note: The shield can be lowered for drier conditions (clippings fly over the top of the basket) or raised to allow for heavy wet grass conditions (clippings build up on the rear of the basket).

ADJUSTING THE CUT-OFF BAR

Adjust the cut-off bar to assure clippings are cleanly discharged from the reel area:

1. Loosen the screws securing the top bar (Fig. 11) to the cutting unit. Insert a .060 inch feeler gauge between the top of the reel and the bar and tighten the screws. Assure the bar and the reel are equal distance apart across the entire reel.

   Note: The bar is adjustable to compensate for changes in turf conditions. The bar should be adjusted closer to the reel when turf is extremely wet. By contrast, adjust the bar further away from the reel when turf conditions are dry.

   The bar should be parallel to the reel to assure optimum performance and should be adjusted whenever shield height is adjusted or whenever the reel is sharpened on a reel grinder.

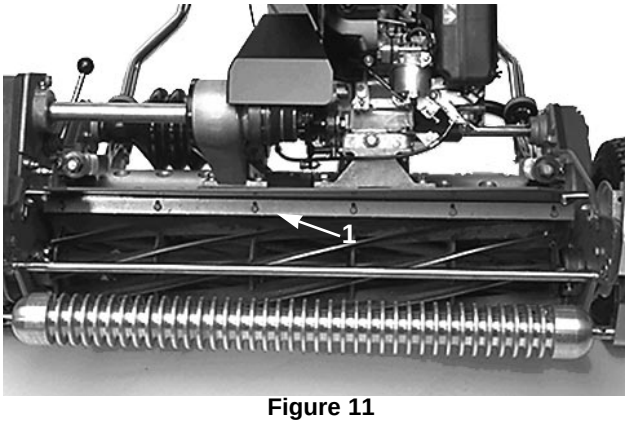

Figure 11

1. Cut-off bar

INSTALL THE GRASS BASKET

1. Grasp the basket by the top rear lip and slide it onto the basket mounting rods (Fig. 12).

2. When cutting in higher heights of cut, the basket may be lowered by removing each basket mounting rod and re-installing on the opposite side of the machine.

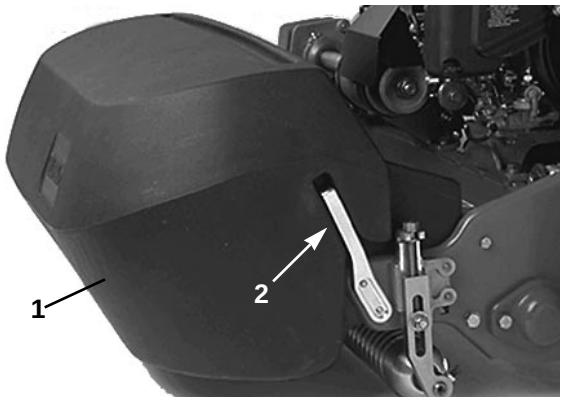

Fig. 12

1. Grass basket
2. Basket mounting rod

CHECK INTERLOCK SWITCH OPERATION

1. Place the traction lever into the ENGAGE position and the engine controls in STARTING position.

2. Try to start the engine. The engine should not start. If it does, the interlock switch needs service. Correct the problem before operating.

Controls

Traction Engagement Lever (Fig. 13)—Located on the front right side of the control panel. The lever has two positions: NEUTRAL and FORWARD. Pushing the lever forward engages the traction drive.

Operator Presence Control (Optional) (Fig. 13)—Located on the rear of the handle. Push the control lever forward to engage. The lever must be engaged before engaging the traction engagement lever or the engine will stop.

Service/Park Brake (Fig. 13)—Located on the left front side of control panel. Use the brake to slow or stop the machine. The brake can also be used as a parking brake. Pulling the lever back over the center will set the parking brake.

Throttle Control (Fig. 13)—Located on the rear right side of control panel. Control has two positions: SLOW and FAST. Engine speed can be varied between the two settings.



Fig. 13

1. Throttle control
2. Traction engagement pedal
3. Service/park brake
4. Operator presence control (optional)

Reel Drive Engagement Lever (Fig. 14)—Located on the right front corner of the machine. The lever has two positions: ENGAGE and DISENGAGE. Pull up on the lever to engage the reel or push down on the lever to disengage the reel.

Choke Lever (Fig. 15)—Located on the left front of the engine. The lever has two positions: RUN and CHOKE. Move the lever to CHOKE when starting a cold engine. After the engine starts, move the lever to RUN.

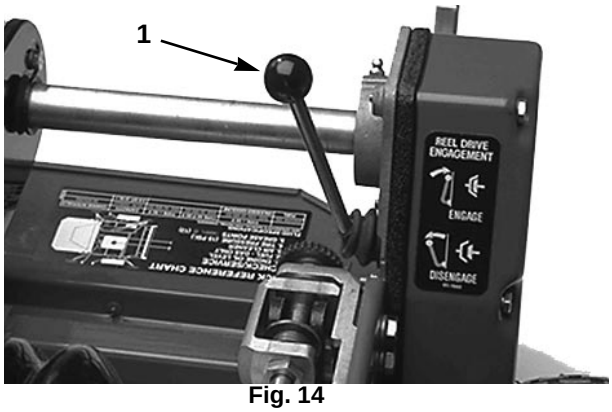

Fig. 14

1. Reel drive engagement lever

Fuel Shut-off Valve (Fig. 15)—Located on the left front of the engine. The valve has two positions: CLOSED and OPEN. Move the lever to CLOSED when storing or transporting the machine. Move the valve to OPEN before starting the engine.

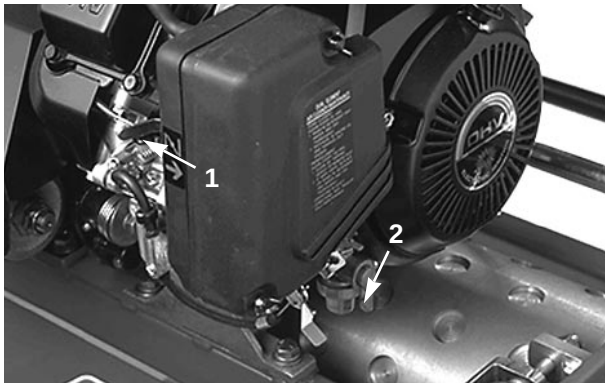

Fig. 15

1. Choke lever
2. Fuel shut off valve

Recoil Starter (Fig. 16)—Pull the recoil starter handle to start the engine.

On/Off Switch (Fig. 16)—Located on the rear of the engine. Move the switch to the ON position to start the engine and to the OFF position to stop the engine.

Kick Stand (Fig. 16)—Located at the rear of the machine, the kickstand is used to raise the rear of the machine for installation or removal of transport wheels.

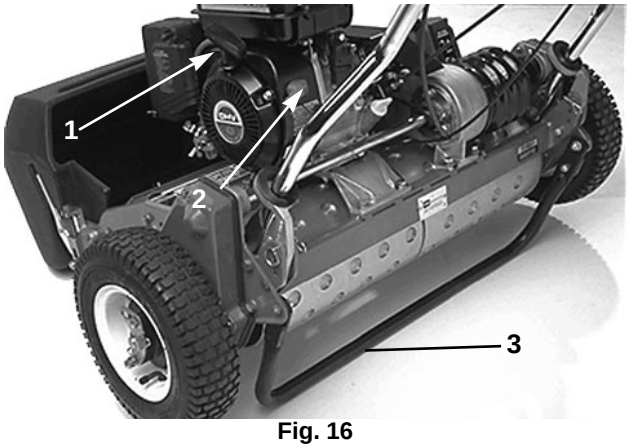

Fig. 16

1. Recoil starter
2. On/Off Switch
3. Kickstand

Operating Instructions

STARTING AND STOPPING

Note: Make sure the spark plug wire is installed on the spark plug.

1. Make sure the traction (Fig. 13) and reel drive (Fig. 14) levers are in the DISENGAGED position.

Note: The engine will not start if the traction lever is in the engaged position.

2. Open the fuel shut-off valve on the engine (Fig. 15).

3. Move the ON/OFF switch (Fig. 13) to ON.

4. Move the throttle control (Fig. 13) to FAST.

5. Move the choke lever (Fig. 15) to the half-open position when starting a cold engine. The choke may not be required when starting a warm engine.

6. Pull the recoil starter handle out until positive engagement results, then pull vigorously to start the engine. Close the choke as the engine warms up.

Note: Do not pull the recoil rope to its limit or let go of the starter handle when pulling the rope because the rope may break or the recoil assembly may be damaged.

7. To stop the engine during operation, move the traction and reel drive controls to DISENGAGED, the throttle control to SLOW and the ON/OFF switch to OFF.

8. Before storing the machine, pull the spark plug wire off the spark plug to prevent accidental starting.

9. Close the fuel shut-off valve before storing or transporting the mower in a vehicle.

TRANSPORT OPERATION

1. Push the kick stand down with your foot and pull up on the handle to raise the rear of the mower and install the transport wheels.

2. To release the kickstand, push the mower forward and then downward on handle.

3. Assure the traction and reel drive controls are in DISENGAGE and start the engine.

4. Set throttle control in SLOW, tip the front of the machine up and slowly increase engine speed while gradually engaging the traction drive so the mower moves forward slowly.

5. Adjust the throttle to operate the mower at the desired ground speed and transport the mower to desired destination.

PREPARING TO MOW

1. Return the traction control lever to DISENGAGE, the throttle to SLOW and stop the engine.

2. Push the kickstand down with your foot and pull up on the handle to raise the wheels off the ground.

3. Push the locking clips on the wheels out of the grooves in the shafts and slide the wheels off the shafts.

MOWING OPERATION

Proper use of the Greensmaster 1600 provides the smoothest turf cutting available. The instructions will provide the utmost performance from your mower.

BEFORE MOWING

Remove dew and worm casts from turf before mowing by whipping the turf with a bamboo pole or by dragging a hose over the area. Be sure the mower is

carefully adjusted and is set evenly on both sides of the reel. Improper mower adjustment is magnified many times in the appearance of the clipped turf. A three-to-five foot wide “collar” should be mowed around the area at a slightly higher cut than the putting green area. This will provide sufficient space for turning the mower without turning on the green area.

METHOD OF MOWING

The Greens should be mowed in a straight back-and-forth direction across the green. Avoid circular mowing or turning the mower on greens areas since scuffing may occur. Turning the mower should be done off the green by raising the cutting reel (pushing the handle down) and turning on the traction drum. The greens area should not be mowed in the same direction at any two successive mowings. Cutting in different directions at each mowing will keep the grass growing in an upright position, preventing grain formation. Mowing should be done at a normal walking pace. Fast speeds saves very little time and will result in an inferior mowing job.

Move the traction lever to ENGAGED, increase throttle speed until the mower is traveling at the desired ground speed, drive the mower out onto the green area, lower the front of the mower and commence operation.

CONTROL OPERATION

To operate the controls while mowing:

1. Start the engine, set the throttle at reduced speed, push down on the handle to raise the cutting unit, move the traction lever to ENGAGED and transport the mower onto the collar of green.

2. Move the traction lever to DISENGAGED and ENGAGE the reel drive lever.

AFTER MOWING

1. Drive off green, move the traction control lever to DISENGAGE, stop the engine and push the reel drive lever to DISENGAGED.

2. Empty the grass catcher of clippings, install grass catcher and commence transport operation.

Maintenance

Minimum Recommended Maintenance Intervals

Maintenance Procedure	Maintenance Interval & Service			
	Every 25 hours	Every 50 hours	Every 100 hours	Every 200 hours
Service air filter pre-cleaner Lubricate all grease fittings. Check for loose fasteners	✓			
Clean the fuel filter and sediment bowl. Adjust the traction drive belts †Change the engine oil		✓		
Check the cut-off bar adjustment Service the air cleaner filter			✓	
Clean the combustion chamber Replace the spark plug Adjust the valves and torque the head bolts				✓
Replace all interlock switches	**Annual Recommendations:** Items listed are recommended every 2 years.			

†Initial break in at 20 hours

Daily Maintenance Checklist

Check the following daily:

- ✓ Safety interlock operation
- ✓ Park brake operation
- ✓ Fuel level
- ✓ Engine oil level
- ✓ Air filter
- ✓ Clean the engine's cooling fins
- ✓ Unusual engine noises
- ✓ Unusual operating noises
- ✓ Reel-to-bedknife adjustment
- ✓ Height-of-cut adjustment

Lubricate all grease fittings immediately after every washing, regardless of the interval.

Touch-up damaged paint

Lubrication

The (12) grease fittings on the mower should be greased at least every 25 hours. Lubricate using No. 2 multi-purpose lithium base grease. A hand operated grease gun is recommended for best results.

1. Wipe each grease fitting with a clean rag.

2. The grease fitting locations are: (2) on The front Roller (Fig. 17), (2) on the reel bearings (Fig. 17), (2) on Drum Axles (Fig. 18), (3) on Differential (Fig. 18), (2) on The reel Countershaft Bearings (Fig. 19) and (1) on Belt Idler Pivot (Fig. 20).

IMPORTANT: Do not apply too much pressure or the grease seals will become permanently damaged.

3. Wipe off excess grease.

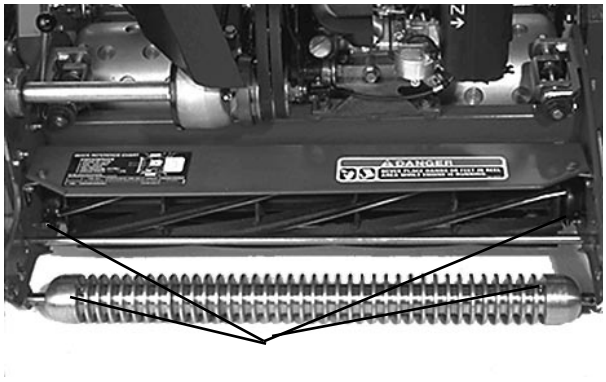

Figure 17

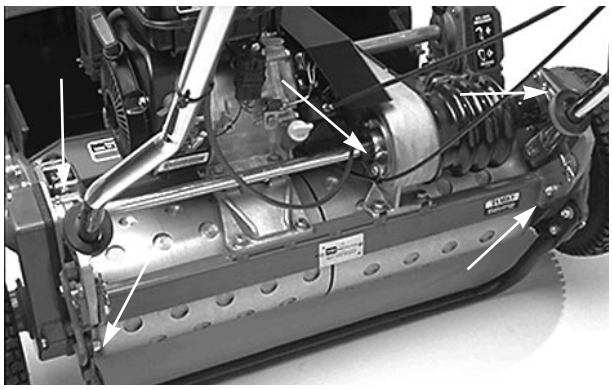

Figure 18

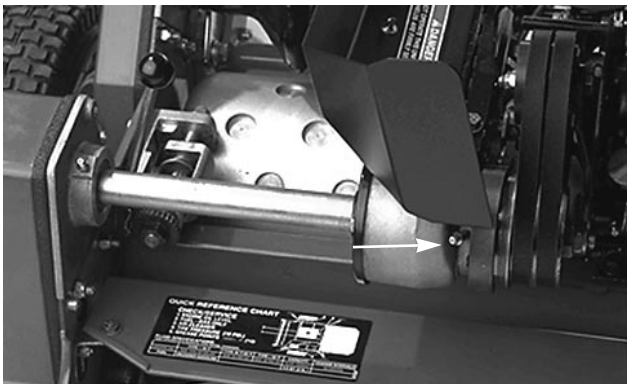

Figure 19



Figure 20

Adjusting the Traction Drive Belt

1. Check tension by depressing the belt at its mid span with 4±1 lbs. of force. The belt should deflect 1/4 inch. If the deflection is incorrect, go to the next step.

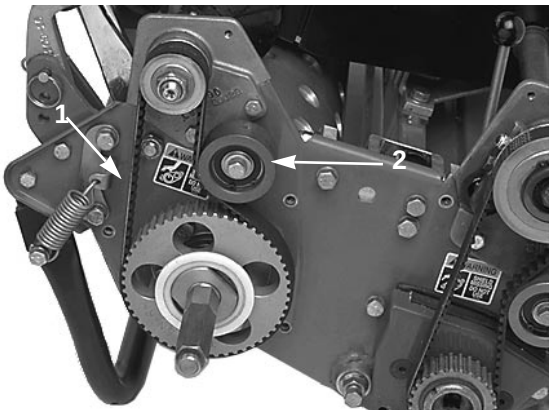

Figure 21

1. Traction drive belt
2. Idler pulley

2. To adjust belt tension:

A. Remove the belt cover mounting screws to expose the belt.

B. Loosen the idler pulley mounting nut and pivot the idler pulley clockwise against the backside of the belt until the desired tension is attained. DO NOT OVERTENSION THE BELT!

C. Tighten the nut to lock adjustment

D. Reinstall the belt cover by placing the cover in position. While maintaining a slight gap between the cover seal and the side plate, install each mounting bolt until the threads engage in the insert. The gap will allow visual alignment of the bolt to the threaded insert. After all bolts are installed, tighten until the stand offs inside the cover contact the side plate. Do not overtighten.

Locations For Selected Maintenance Procedures

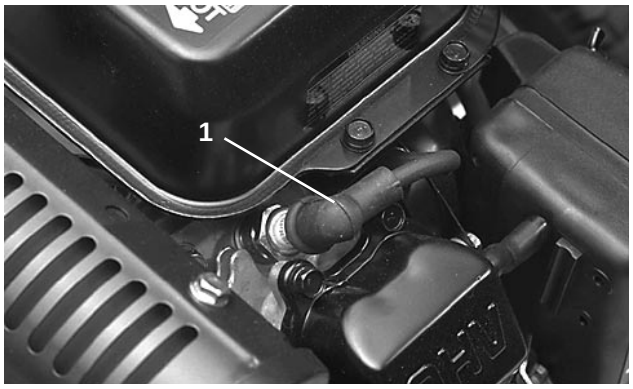

Fig. 22

1. Spark plug

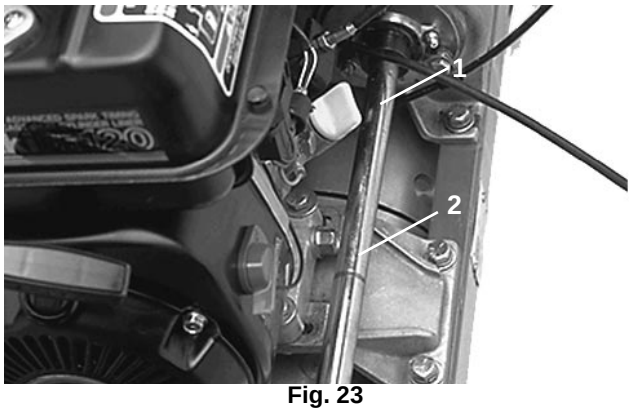

Fig. 23

1. Oil level gauge
2. Drain plug

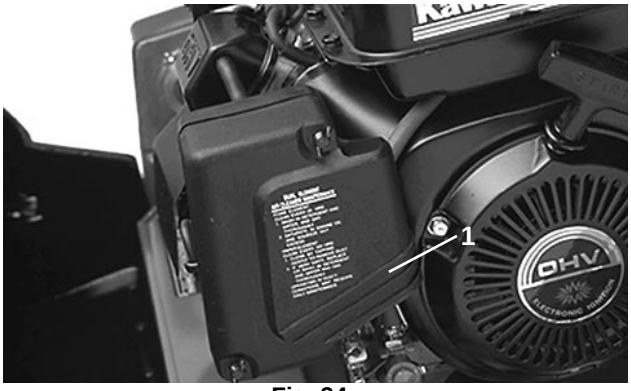

Fig. 24

1. Air cleaner

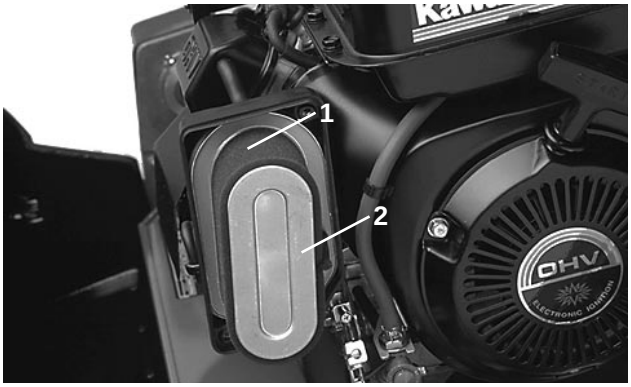

Fig. 25

1. Foam element
2. Paper element

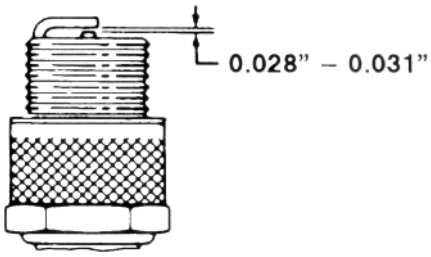

Fig. 26



Fig. 27

1. Shut-off valve
2. Bowl

IDENTIFICATION AND ORDERING

MODEL AND SERIAL NUMBERS

The Greensmaster 1600 has two identification numbers: a model number and a serial number. These numbers are stamped into a plate located on the rear of frame. In any correspondence concerning the unit, supply the model and serial numbers to ensure correct information and replacement parts are obtained.

Note: Do not order by reference number if a parts catalog is being used; use the part number.

To order replacement parts from an authorized TORO Distributor, supply the following information:

1. Model and serial numbers.

2. Part number, description, and quantity of parts desired.

The Toro Commercial Products Two-Year Limited Warranty

The Toro Company warrants your 1996 or newer Toro Commercial Product ("Product") purchased after January 1, 1997, to be free from defects in materials or workmanship for the period of time listed below. Where a warrantable condition exists, Toro will repair the Product at no cost to you including diagnosis, labor, parts, and transportation. This warranty begins on the date the Product is delivered to the original retail purchaser.

Warranty Duration: Two years or 1500 operational hours*, whichever occurs first.
***Product equipped with hour meter**

Owner Responsibilities:

As the Product owner, you are responsible for required maintenance and adjustments stated in your Owner's Manual. Failure to perform required maintenance and adjustments can be grounds for disallowing a warranty claim.

Instructions for Obtaining Warranty Service:

You are responsible for notifying the Commercial Products Distributor or Authorized Commercial Products Dealer from whom you purchased the Product as soon as you believe a warrantable condition exists.

If you need help locating a Commercial Products Distributor or Authorized Dealer, or if you have questions regarding your warranty rights or responsibilities, you may contact us at:

Toro Commercial Products Service Department
8111 Lyndale Avenue South
Minneapolis, MN, 55420-1196
Telephone: (612) 888-8801
Facsimile: (612) 887-8258
E-Mail: Commercial.Service@Toro.Com

Maintenance Parts:

Parts scheduled for replacement as required maintenance ("Maintenance Parts"), are warranted for the period of time up to the scheduled replacement time for that part.

Items/Conditions Not Covered:

Not all product failures or malfunctions that occur during the warranty period are defects in materials or workmanship. The items/conditions listed below are not covered by this warranty:

- Product failures which result from the use of non-Toro replacement parts, or from installation and use of add-on, modified, or unapproved accessories are not covered.
- Product failures which result from failure to perform required maintenance and/or adjustments are not covered.
- Product failures that result from operating the Product in an abusive, negligent or reckless manner are not covered.
- This warranty does not apply to parts subject to consumption through use unless found to be defective. Examples of parts which are consumed, or used up, during normal Product operation include, but are not limited to, blades, reels, bedknives, tines, spark plugs, castor wheels, tires, filters, belts, etc.
- This warranty does not apply to failures caused by outside influence. Items considered to be outside influence include, but are not limited to, weather, storage practices, contamination, use of unapproved coolants, lubricants, additives, or chemicals, etc.
- This warranty does not apply to normal "wear and tear" items. Normal "Wear and Tear" includes, but is not limited to, damage to seats due to wear or abrasion, worn painted surfaces, scratched decals or windows, etc.

Other Legal Disclaimers:

The above remedy of product defects through repair by an authorized distributor or dealer is the purchaser's sole remedy for any defect. This warranty gives you specific legal rights, and you may also have other rights which vary from state to state.

Except for the Emissions warranty referenced below, if applicable, there is no other express warranty. Al1 implied warranties of merchantability and fitness for use are limited to the duration of the express warranty.

Some states do not allow limitations on how long an implied warranty lasts, so the above limitation may not apply to you.

The Toro Company is not liable for indirect, incidental or consequential damages in connection with the use of the Product, including any cost or expense of providing substitute Product or service during periods of malfunction or non-use.

Some states do not allow the exclusion of incidental or consequential damages, so the above exclusion may not apply to you.


TORO®