Form No. 3377-345 Rev D

TORO®

Count on it.

Parts Catalog

# Greensmaster® 3400 TriFlex® Traction Unit

**Model No. 04520—Serial No. 313000001 and Up**

Register at www.Toro.com.
Original Instructions (EN)

CE

*3377-345* D

# Ordering Replacement Parts

To order replacement parts, please supply the part number, the quantity, and the description of each part desired.

### Understanding Reference Numbers

Each identified part in an illustration has a reference number. The reference number for a part also appears in the parts list, along with other information about the part.

This catalog uses two special reference number formats, one to indicate parts in a service assembly and another to indicate the quantity of a given part in an illustration.

### Service Assembly Reference Numbers

Parts in service assemblies have reference numbers in the form a:b. The a represents the reference number of the entire service assembly and the b represents a sequential number unique to each part within the service assembly.

For example, a wheel assembly might be identified by reference number 6, the tire by 6:1, the valve by 6:2, and the wheel by 6:3. When you order the assembly identified by reference number 6, you receive all parts identified by reference numbers 6:1,6:2, and 6:3. However, you may also order any part individually. Reference numbers of this type appear in illustration and in parts lists.

### Reference Numbers Indicating Quantity

In an illustration, if a reference number indicates more than one part, the reference number has the form nX y. The n represents the quantity of the part, the X is the multiplication symbol, and the y represents the reference number.

For example, in an illustration, the reference number 2X 37 means that two of the parts identified by reference number 37 are indicated.

# Contents

Roll-Over Protection System Assembly . . . 5
Brake Cable Grommet Assembly . . . 6
Frame Assembly . . . 7
Platform Assembly . . . 8
Right Hand Support Platform Assembly . . . 9
Seatbase Assembly . . . 10
Steering Arm and Adjuster Assembly . . . 11
Brake Cable and Lever Assembly . . . 12
Back Wheel Assembly . . . 13
Hydraulic Cylinder Assembly No. 117-4480 . . . 14
Front Wheel Assembly . . . 15
Right Hand Brake Assembly No. 115-9441 . . . 16
Left Hand Brake Assembly No. 115-9440 . . . 17
Right Hand Wheel Motor Assembly No. 117-4302 . . . 18
Left Hand Wheel Motor Assembly No. 117-4303 . . . 19
Console and Reel Control Assembly . . . 20
Traction Interface Control Assembly . . . 21
Ignition, Throttle and Choke Control Assembly . . . 22
Console Cable Routing Assembly . . . 23
Engine and Exhaust Assembly . . . 24
Radiator, Fuel Pump and Air Cleaner Assembly . . . 26
Air Cleaner Assembly No. 95-5805 . . . 27
Radiator, Air Hose and Fuel Line Assembly . . . 28
Bellhousing Assembly . . . 29
Fuel and Hydraulic Tank Assembly . . . 30
Controller Assembly . . . 31
Battery Assembly . . . 32
Wire Harness Assembly . . . 33
Pump Coupling Assembly . . . 34
Hydraulic Pump Assembly No. 121-9558 . . . 35
Neutral Centering Assembly . . . 37
Traction Drive Hydraulic Line Assembly . . . 38
Traction Drive Hose Routing Assembly . . . 39
Hydraulic Mow Assembly . . . 40
Hydraulic Mow Manifold Assembly . . . 41
Hydraulic Mow Manifold Assembly No. 117-9858 . . . 42
Hydraulic Mow Clamp Assembly . . . 43
Hydraulic Mow Hose Routing Assembly . . . 44
Hydraulic Mow Reel Motor Assembly . . . 45
Hydraulic Reel Motor Assembly No. 115-3321 . . . 46
Hydraulic Mow Gear Pump Assembly . . . 47
Hydraulic Gear Pump Assembly No. 114-9956 . . . 48
Lift Circuit Assembly . . . 49
Steering Valve Assembly No. 114-4672 . . . 51
Hydraulic Cylinder Assembly No. 119-8129 . . . 52
Hydraulic Cylinder Assembly No. 119-8128 . . . 53
Hydraulic Lift Manifold Assembly . . . 54
Hydraulic Lift Manifold Assembly No. 125-5187 . . . 55
Steering Circuit Assembly (1) . . . 56
Steering Circuit Assembly (3) . . . 57
Suspension and Basket Assembly . . . 58
Suspension Pin Position Assembly . . . 59
Suspension A-Arm Assembly . . . 60
Suspension Crossarm Assembly . . . 61

**© 2021—The Toro® Company**
**8111 Lyndale Avenue South**
**Bloomington, MN 55420**



**Contact us at www.Toro.com.**
**Printed in the USA.**
**All Rights Reserved**

# Contents (continued)

Crankcase Assembly . . . 62
Oil Pan Assembly . . . 63
Cylinder Head Assembly . . . 64
Gear Case Assembly . . . 65
Cylinder Head Cover Assembly . . . 66
Dipstick and Guide Assembly . . . 67
Main Bearing Case Assembly . . . 68
Cam Shaft and Idle Gear Shaft Assembly . . . 69
Piston and Crankshaft Assembly . . . 70
Flywheel and Fuel Camshaft Assembly . . . 71
Idle Apparatus and Stop Solenoid Assembly . . . 72
Injection Pump and Governor Assembly . . . 73
Speed Control Plate Assembly . . . 74
Nozzle Holder and Glow Plug Assembly . . . 75
Nozzle Holder Component Assembly . . . 76
Alternator and Pulley and Fuel Pump Cover Assembly . . . 79
Alternator Components . . . 80
Starter Installation Assembly . . . 81
Starter Assembly No. 110-3800 . . . 82
Water Flange, Thermostat and Water Pump Assembly . . . 83
Water Pipe Assembly . . . 84
Valve and Rocker Arm Assembly . . . 85
Intake Manifold Assembly . . . 86
Exhaust Manifold Assembly . . . 87
Attachments and Accessories . . . 88

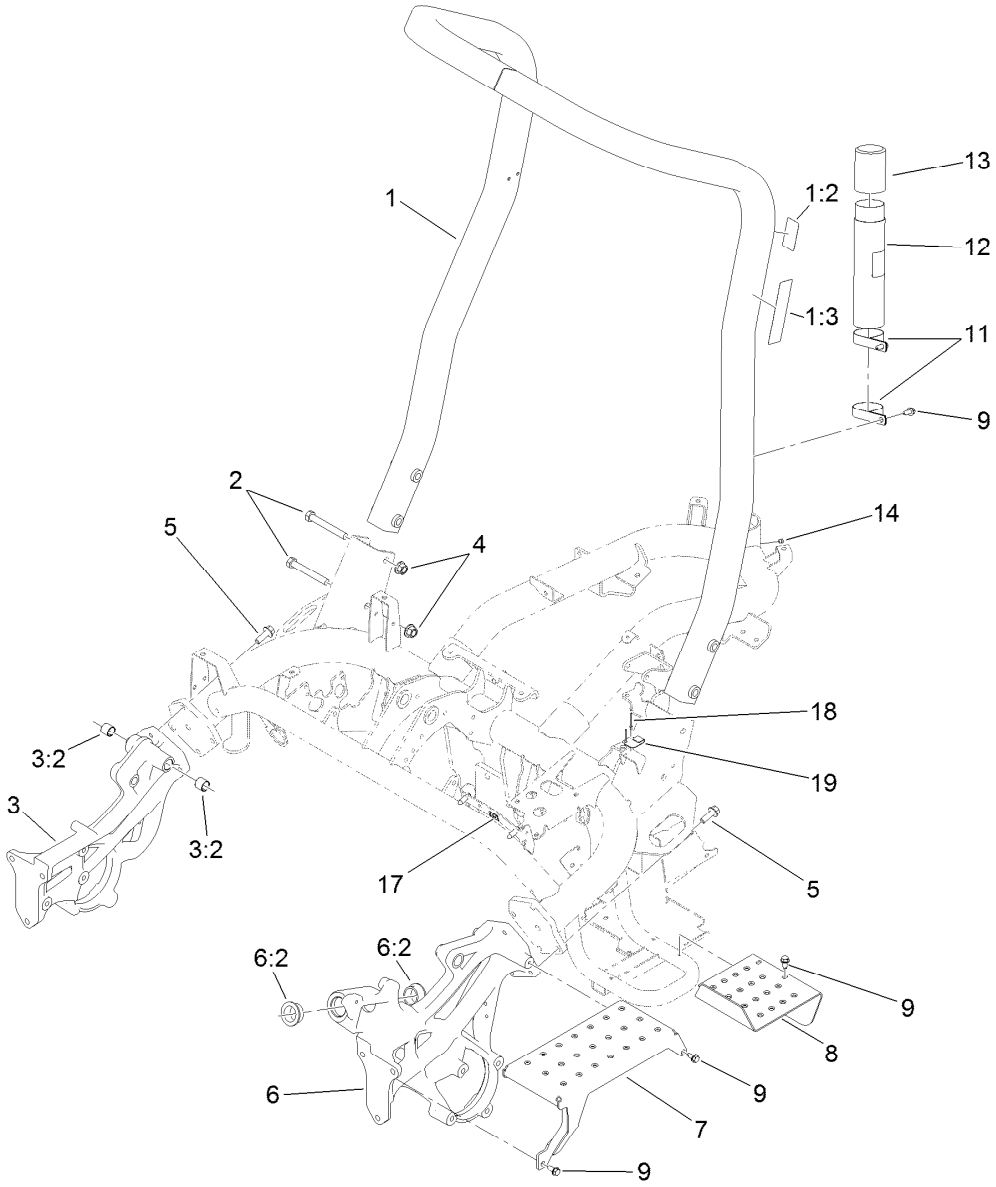


# Roll-Over Protection System Assembly

| Ref. | Part Number | Qty. | Description |
|---|---|---|---|
| 1 | 115-8206 | 1 | ROPS ASM |
| 1:2 | 115-8199 | 1 | Decal-ROPS |
| 1:3 | 115-8226 | 1 | Decal-ROPS |
| 2 | 325-35 | 4 | Screw-HH |
| 3 | 117-9023 | 1 | Casting-Side, RH |
| 3:2 | 94-9609 | 2 | Bushing-Straight |
| 4 | 99-5107 | 4 | Nut-Lock |
| 5 | 117-9035 | 8 | Screw-HHF |
| 6 | 117-9022 | 1 | Casting-Side, LH |
| 6:2 | 60-0080 | 2 | Bushing |

| Ref. | Part Number | Qty. | Description |
|---|---|---|---|
| 7 | 117-9051-01 | 1 | Step |
| 8 | 119-4468-01 | 1 | Plate-Step |
| 9 | 32104-32 | 9 | Screw-HWH |
| 11 | 2412-133 | 2 | Clamp-R |
| 12 | 104-7050 | 1 | Tube-Manual |
| 13 | 104-7048 | 1 | Cap-Housing |
| 14 | 302-59 | 1 | Plug-EXT Hex Spl |
| 17 | 119-1730 | 1 | Receptacle-Clip, Mini |
| 18 | 3269-32 | 2 | Rivet-Pop |
| 19 | 121-5865 | 1 | Clip-Cover, Back |

# Brake Cable Grommet Assembly

| Ref. | Part Number | Qty. | Description |
|---|---|---|---|
| 1 | 240-5 | 1 | Grommet |
| 2 | 98-8529 | 3 | Grommet |

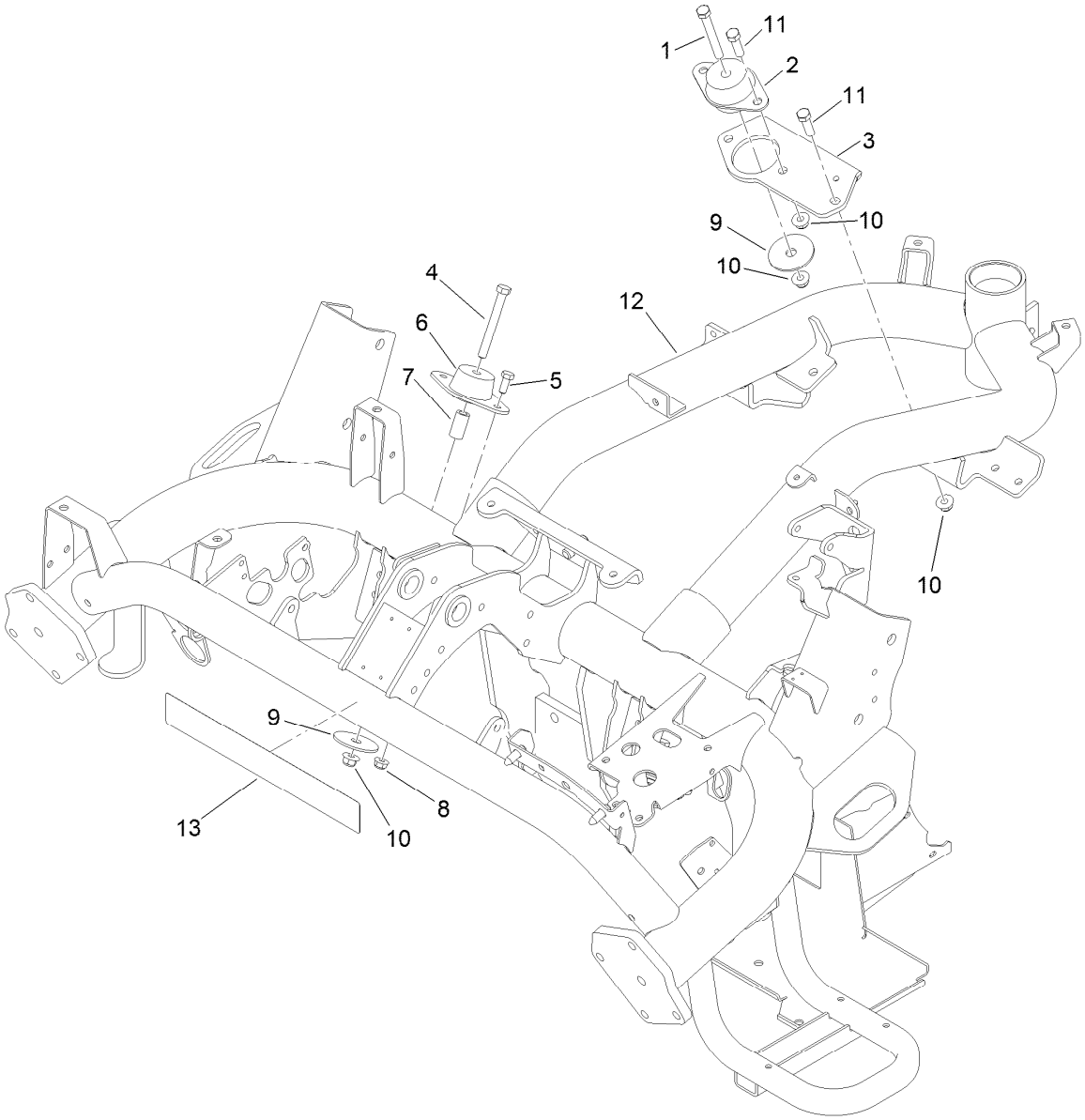


# Frame Assembly

| Ref. | Part Number | Qty. | Description |
|---|---|---|---|
| 1 | 323-14 | 1 | Screw-HH |
| 2 | 53-9680 | 1 | Mount-Engine |
| 3 | 119-2134-01 | 1 | Bracket-Mount, Rear |
| 4 | 323-20 | 2 | Screw-HH |
| 5 | 322-4 | 4 | Screw-HH |
| 6 | 83-1030 | 2 | Mount-Engine |
| 7 | 110-4631 | 2 | Tube-Spacer |
| 8 | 104-8300 | 4 | Nut-HF, NI |
| 9 | 87-5100 | 3 | Washer-Snubbing |
| 10 | 104-8301 | 6 | Nut-HF, NI |
| 11 | 323-7 | 3 | Screw-HH |
| 12 | 121-5877-01 | 1 | Frame-Diesel |
| 13 | 119-9347 | 1 | Decal |

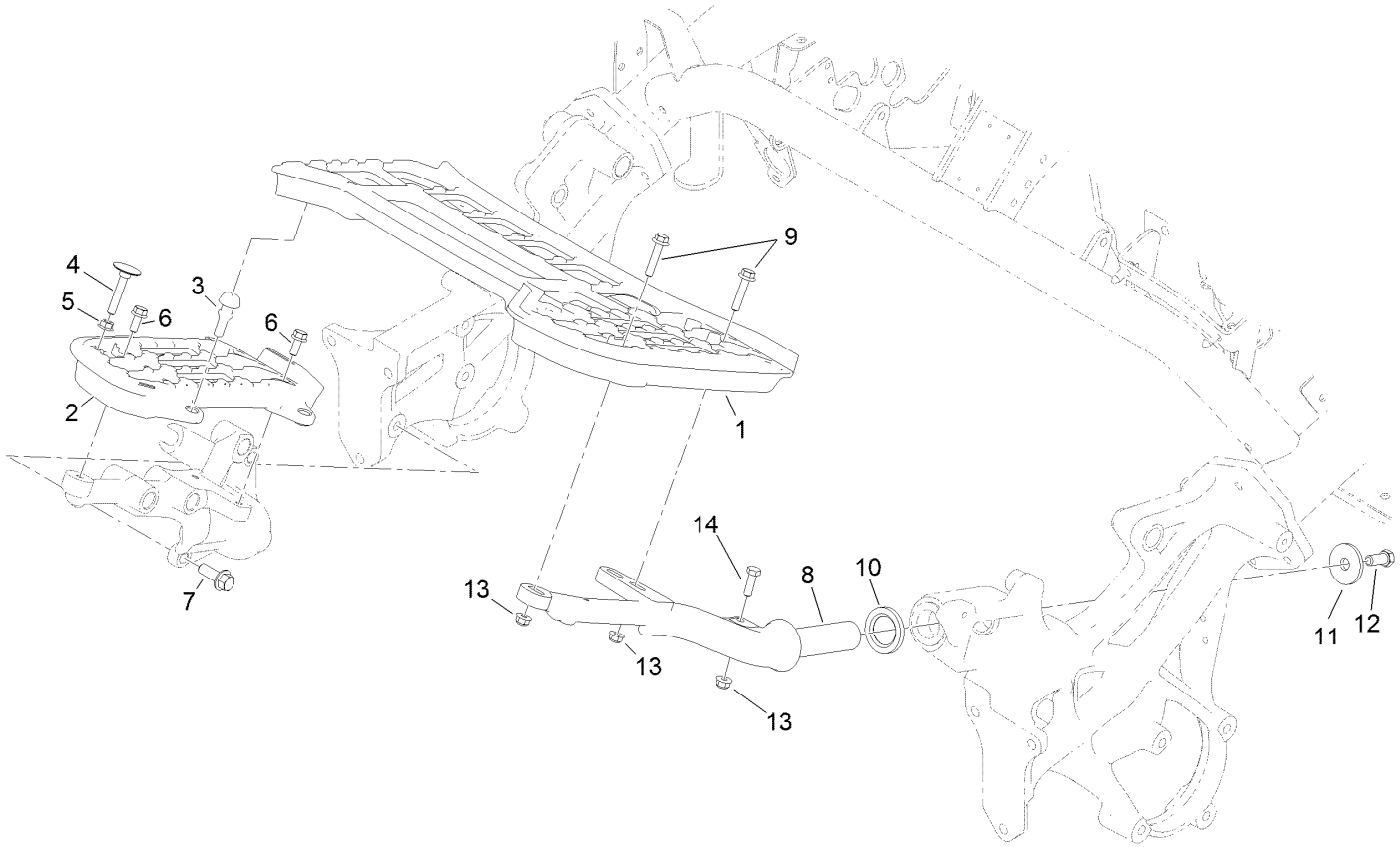


# Platform Assembly

| *Ref.* | *Part Number* | *Qty.* | *Description* |
|---|---|---|---|
| 1 | 117-9009 | 1 | Platform-LH |
| 2 | 117-9008 | 1 | Platform-RH |
| 3 | 117-9072 | 2 | Bumper-Rubber |
| 4 | 115-8240 | 1 | Screw-Elevator |
| 5 | 32128-20 | 1 | Nut-HF |
| 6 | 3234-47 | 3 | Screw-HHF |
| 7 | 117-9035 | 3 | Screw-HHF |
| 8 | 117-9006-01 | 1 | Support-Platform, LH |
| 9 | 115-1794 | 3 | Screw-HHF |
| 10 | 94-8946 | 1 | Washer-Thrust |
| 11 | 84-1560 | 1 | Washer-Thrust |
| 12 | 324-4 | 1 | Screw-HH |
| 13 | 104-8300 | 4 | Nut-HF, NI |
| 14 | 322-5 | 1 | Screw-HH |

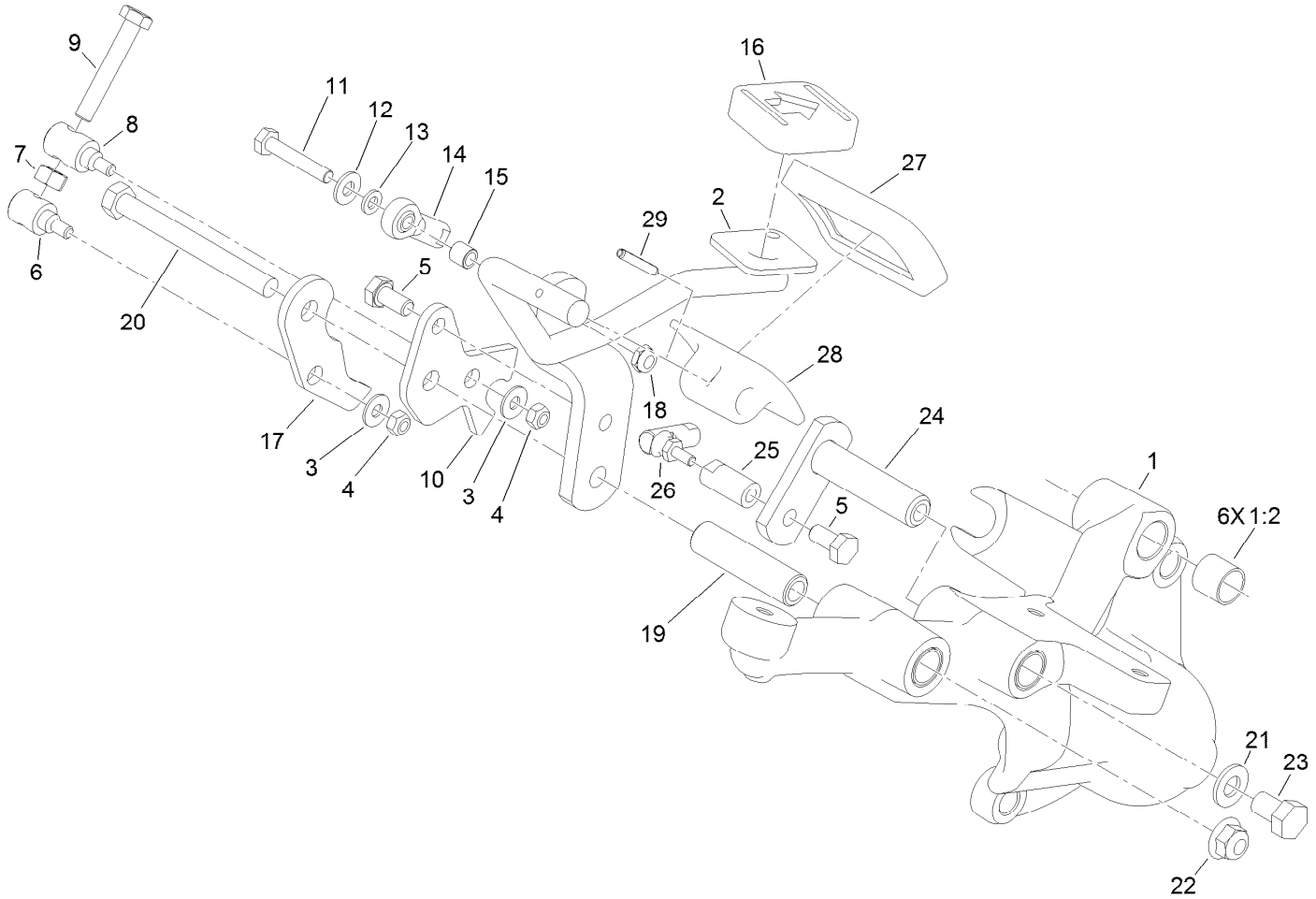


# Right Hand Support Platform Assembly

| Ref. | Part Number | Qty. | Description |
|---|---|---|---|
| 1 | 117-9019 | 1 | Support-Platform, RH |
| 1:2 | 256-311 | 6 | Bushing-Split |
| 2 | 119-1725-01 | 1 | Rod-Traction |
| 3 | 3256-1 | 2 | Washer-Flat |
| 4 | 33023-00 | 2 | Nut-Lock |
| 5 | 33114-016 | 2 | Screw-HH |
| 6 | 94-1374 | 1 | Trunnion-Bracket, Mow |
| 7 | 33014-00 | 1 | Nut-Hex |
| 8 | 94-1375 | 1 | Trunnion-Bracket, Lock |
| 9 | 94-3489 | 1 | Screw-HH |
| 10 | 117-9021 | 1 | Bracket-Lock |
| 11 | 321-9 | 1 | Screw-HH |
| 12 | 3256-22 | 1 | Washer-Flat |
| 13 | 33093-00 | 1 | Washer-Flat |
| 14 | 2411-41 | 1 | Rod End-Ball Joint |

| Ref. | Part Number | Qty. | Description |
|---|---|---|---|
| 15 | 99-3545 | 1 | Spacer |
| 16 | 74-9110 | 1 | Pad-Pedal, Reverse |
| 17 | 125-3011 | 1 | Bracket-Mow |
| 18 | 3296-56 | 1 | Nut-Lock, NI |
| 19 | 94-1371 | 1 | Spacer |
| 20 | 323-42 | 1 | Screw-HH |
| 21 | 3256-24 | 1 | Washer-Flat |
| 22 | 104-8301 | 1 | Nut-HF, NI |
| 23 | 33115-016 | 1 | Screw-HH |
| 24 | 94-1300 | 1 | Lock-Neutral |
| 25 | 94-1386 | 1 | Shaft-Pedal |
| 26 | 2411-38 | 1 | Joint-Ball |
| 27 | 74-9100 | 1 | Pad-Pedal, Forward |
| 28 | 117-9507 | 1 | Pedal-Accelerator |
| 29 | 32121-45 | 1 | Pin-Spring |

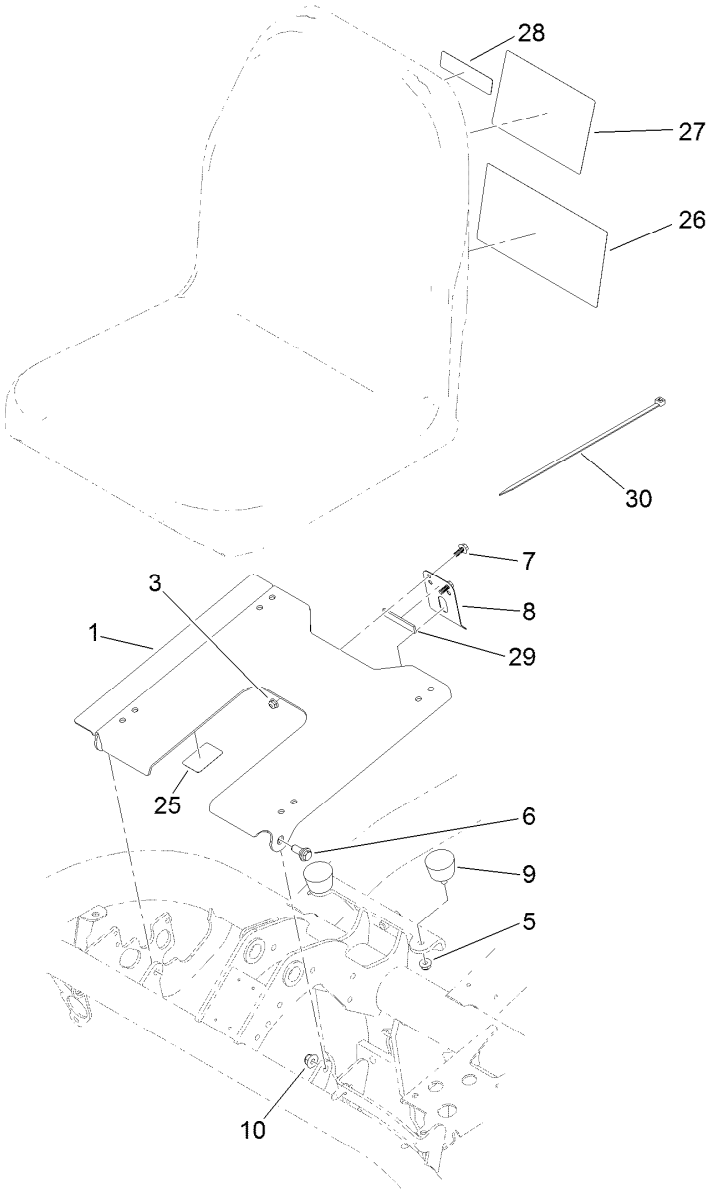


# Seatbase Assembly

| Ref. | Part Number | Qty. | Description |
|---|---|---|---|
| 1 | 117-4440-03 | 1 | Plate-Seat |
| 3 | 104-7201 | 2 | Nut-HF, NI |
| 5 | 104-8300 | 2 | Nut-HF, NI |
| 6 | 94-7582 | 2 | Bolt-Shoulder |
| 7 | 99-6810 | 2 | Screw-HHF |
| 8 | 66-2630 | 1 | Latch-Seat |
| 9 | 68-3270 | 2 | Bumper-Rubber |
| 10 | 104-8301 | 2 | Nut-HF, NI |
| 25 | 115-8203 | 1 | Decal-Reference, Fuse (Radiator Fan) |
| 26 | 115-8170 | 1 | Decal-Service, Spanish |
| 26 | 115-8171 | 1 | Decal-Service, French |
| 26 | 115-8172 | 1 | Decal-Service, German |

| Ref. | Part Number | Qty. | Description |
|---|---|---|---|
| 26 | 115-8173 | 2 | Decal, Service, Swedish |
| 26 | 115-8174 | 1 | Decal-Service, Italian |
| 26 | 115-8175 | 1 | Decal-Service, Portuguese |
| 26 | 115-8176 | 1 | Decal-Service, Norwegian |
| 26 | 115-8177 | 1 | Decal-Service, Finnish |
| 26 | 115-8178 | 1 | Decal-Service, Danish |
| 26 | 115-8179 | 1 | Decal-Service, Dutch |
| 26 | 115-8180 | 1 | Decal-Service, Japanese |
| 26 | 119-9343 | 1 | Decal-Service, 3400/3420 |
| 27 | 115-8156 | 1 | Decal-Speed, Clip |
| 28 | 117-2718 | 1 | Decal-Arrester, Spark |
| 29 | 120-5753 | 1 | Strip-Foam |
| 30 | 3290-379 | 2 | Tie-Cable |

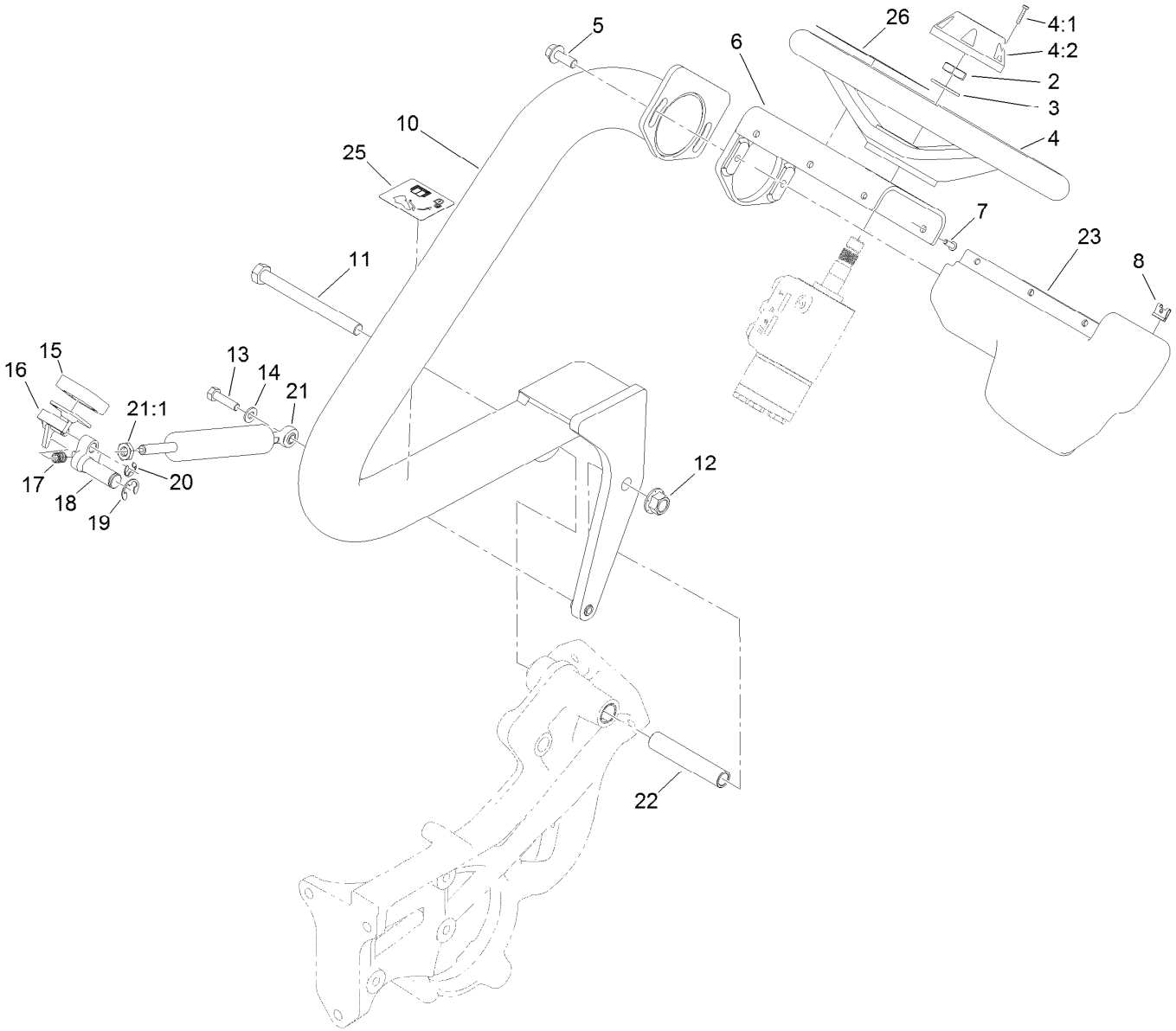


# Steering Arm and Adjuster Assembly

| Ref. | Part Number | Qty. | Description |
|---|---|---|---|
| 2 | 3296-33 | 1 | Nut-Lock, NI |
| 3 | 3256-27 | 1 | Washer-Flat |
| 4 | 75-0560 | 1 | Steering Wheel ASM |
| 4:1 | 32144-21 | 1 | Screw |
| 4:2 | 68-5140 | 1 | Cap-Wheel, Steering |
| 5 | 3234-42 | 2 | Screw-HHF |
| 6 | 117-9346-03 | 1 | Mount-Steering |
| 7 | 3274-39 | 6 | Screw-HSBH |
| 8 | 3290-277 | 6 | Nut-Speed |
| 10 | 117-4444-01 | 1 | Arm-Steering |
| 11 | 325-22 | 1 | Screw-HH |
| 12 | 99-5107 | 1 | Nut-Lock |
| 13 | 322-47 | 1 | Screw-HH |
| 14 | 3256-23 | 1 | Washer-Plain |

| Ref. | Part Number | Qty. | Description |
|---|---|---|---|
| 15 | 74-9110 | 1 | Pad-Pedal, Reverse |
| 16 | 117-4457 | 1 | Lever |
| 17 | 106-9791 | 1 | Spring |
| 18 | 117-9024 | 1 | Lever-Pivot |
| 19 | 32120-19 | 1 | E-Ring |
| 20 | 105-7004 | 1 | E-Ring |
| 21 | 125-5181 | 1 | Cylinder-Gas |
| 21:1 | 112-8617 | 1 | Nut-Hex |
| 22 | 117-9002 | 1 | Spacer |
| 23 | 119-9300 | 1 | Cover-Valve, Steering |
| 25 | 119-9346 | 1 | Decal-Arm, Steering |
| 26 | 121-2640 | 1 | Decal-Danger, CE |
| 26 | 121-2641 | 1 | Decal-Danger |

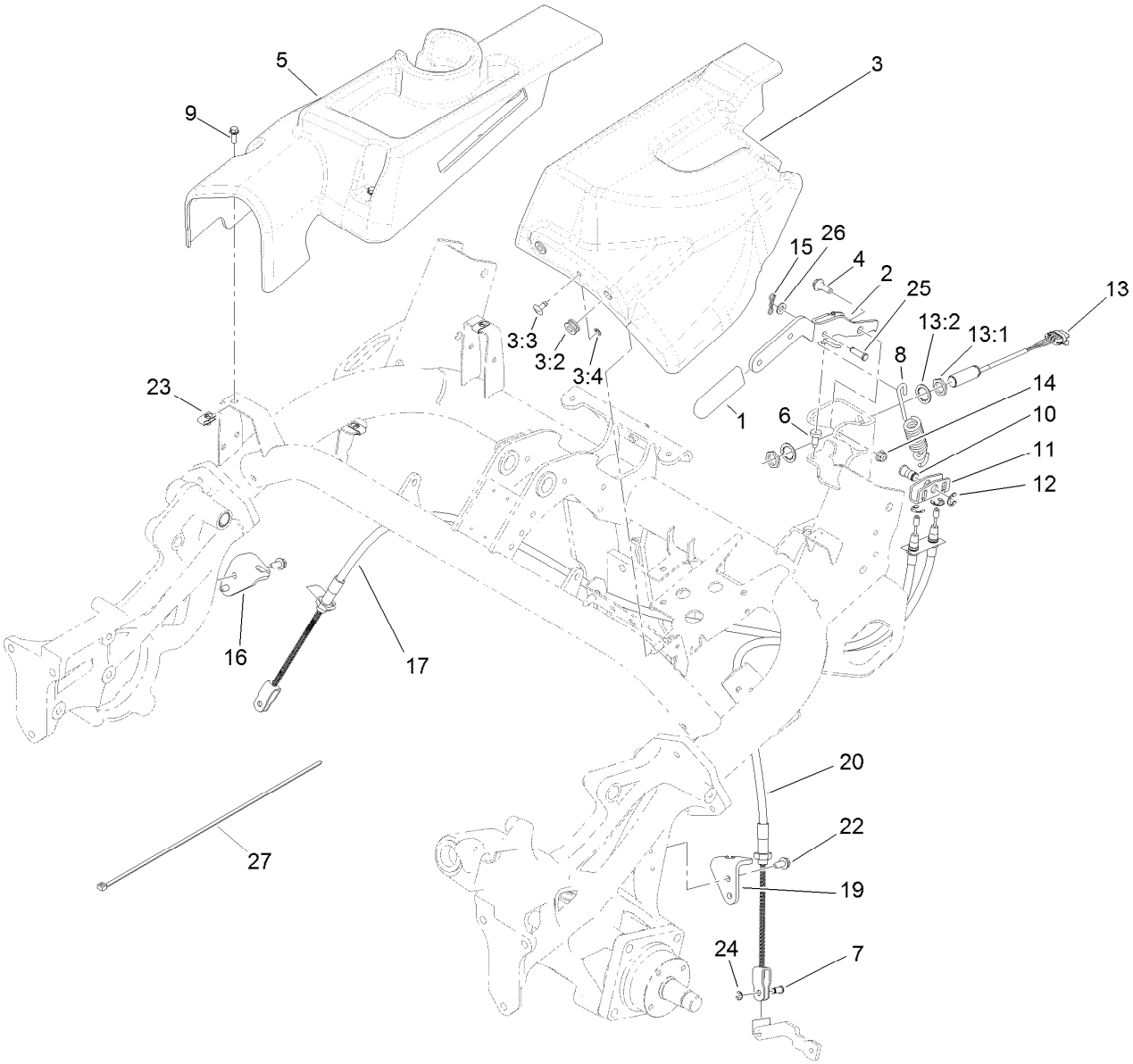


# Brake Cable and Lever Assembly

| Ref. | Part Number | Qty. | Description |
|---|---|---|---|
| 1 | 21-1880 | 1 | Grip-Handle |
| 2 | 119-2149-03 | 1 | Lever-Brake |
| 3 | 121-5868 | 1 | LH Cover ASM |
| 3:2 | 92-5972 | 2 | Grommet-Rubber |
| 3:3 | 119-1728 | 1 | Stud-1/4 Turn |
| 3:4 | 119-1729 | 1 | Retainer-Stud |
| 4 | 116-1297 | 2 | Screw-Shoulder |
| 5 | 119-1678 | 1 | Cover-Side, RH |
| 6 | 87-8460 | 1 | Bumper-Rubber |
| 7 | 109-6887 | 2 | Pin-Clevis |
| 8 | 119-2144 | 1 | Spring-Extention |
| 9 | 115-5103 | 3 | Screw-HHF |
| 10 | 119-2146 | 1 | Pin |
| 11 | 114-9994 | 1 | Bracket-Equalizer, Cable |
| 12 | 32120-47 | 3 | Ring-Retaining, External |

| Ref. | Part Number | Qty. | Description |
|---|---|---|---|
| 13 | 115-5300 | 1 | Proximity Switch ASM |
| 13:1 | 117-3207 | 2 | Nut-Hex |
| 13:2 | 117-3208 | 2 | Washer-Lock, Internal Tooth |
| 14 | 104-8300 | 2 | Nut-HF, NI |
| 15 | 119-1415 | 1 | Pin-Cotter, Locking |
| 16 | 115-5787 | 1 | Bracket-Brake Cable, RH |
| 17 | 115-9412 | 1 | Cable-Brake, RH |
| 19 | 114-9997 | 1 | Bracket-Brake Cable, LH |
| 20 | 114-9996 | 1 | Cable-Brake, LH |
| 22 | 32104-32 | 4 | Screw-HWH |
| 23 | 107069 | 3 | Clip |
| 24 | 701197 | 2 | E-Ring |
| 25 | 283-61 | 1 | Pin-Yoke |
| 26 | 3256-23 | 1 | Washer-Plain |
| 27 | 3290-379 | 1 | Tie-Cable |

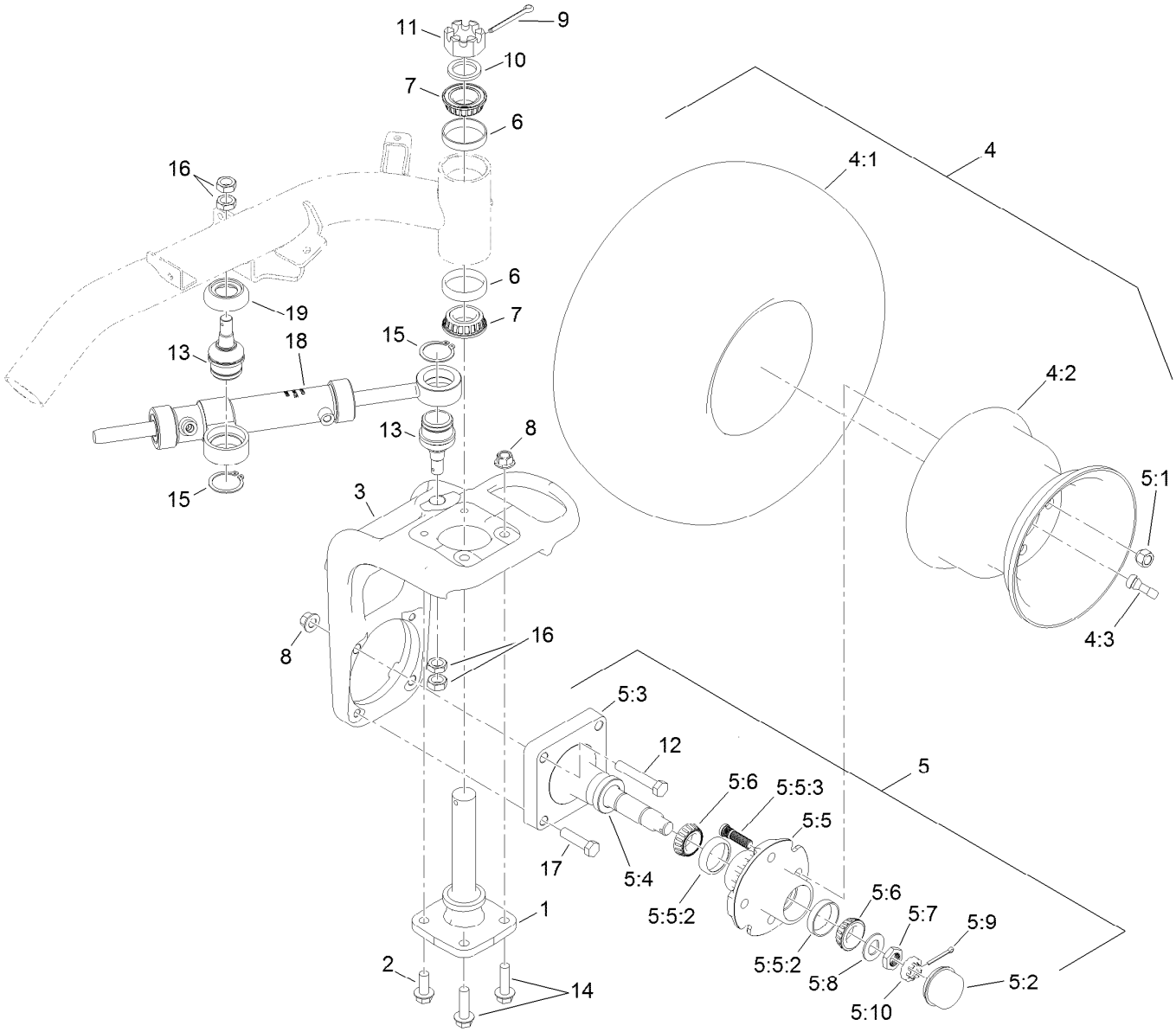


# Back Wheel Assembly

| Ref. | Part Number | Qty. | Description |
|---|---|---|---|
| 1 | 115-2657 | 1 | Spindle-Steering |
| 2 | 3234-38 | 2 | Screw-HHF |
| 3 | 117-4366-01 | 1 | Base-Fork, Rear |
| 4 | | 1 | Wheel And Tire ASM ● |
| 4:1 | 117-9031 | 1 | Tire |
| 4:2 | 217-60 | 1 | Rim |
| 4:3 | 232-27 | 1 | Stem-Valve |
| 5 | 119-4490 | 1 | Wheel Spindle ASM |
| 5:1 | 242-50 | 4 | Nut-Lug |
| 5:2 | 241-119 | 1 | Cap-Dust |
| 5:3 | 112-7173 | 1 | Spindle |
| 5:4 | 112-1690 | 1 | Seal-Oil |
| 5:5 | 117-9093 | 1 | Hub ASM |
| 5:5:2 | 254-72 | 2 | Bearing-Cup, Tapered |
| 5:5:3 | 114-3918 | 4 | Stud-Wheel |
| 5:6 | 254-94 | 2 | Bearing-Cone, Tapered |
| 5:7 | 117-8260 | 1 | Nut |

| Ref. | Part Number | Qty. | Description |
|---|---|---|---|
| 5:8 | 117-8259 | 1 | Washer-Spindle |
| 5:9 | 3272-18 | 1 | Pin-Cotter |
| 5:10 | 93-0307 | 1 | Nut-Lock, Retainer |
| 6 | 115-9471 | 2 | Bearing-Cup |
| 7 | 115-9472 | 2 | Bearing-Cone And Seal |
| 8 | 99-5107 | 4 | Nut-Lock |
| 9 | 3272-37 | 1 | Pin-Cotter |
| 10 | 18-6320 | 1 | Washer-Steering |
| 11 | 32136-9 | 1 | Nut-Hex, Slotted |
| 12 | 325-12 | 2 | Screw-HH |
| 13 | 117-9875 | 2 | Joint-Ball |
| 14 | 3234-22 | 2 | Screw-HHF |
| 15 | 32151-104 | 2 | Ring-Retaining, External |
| 16 | 3220-6 | 4 | Nut-Jam |
| 17 | 325-8 | 2 | Screw-HH |
| 18 | 117-4480 | 1 | HYD Cylinder ASM |
| 19 | 120-2026 | 1 | Spacer-Cylinder |

● Not serviced separately

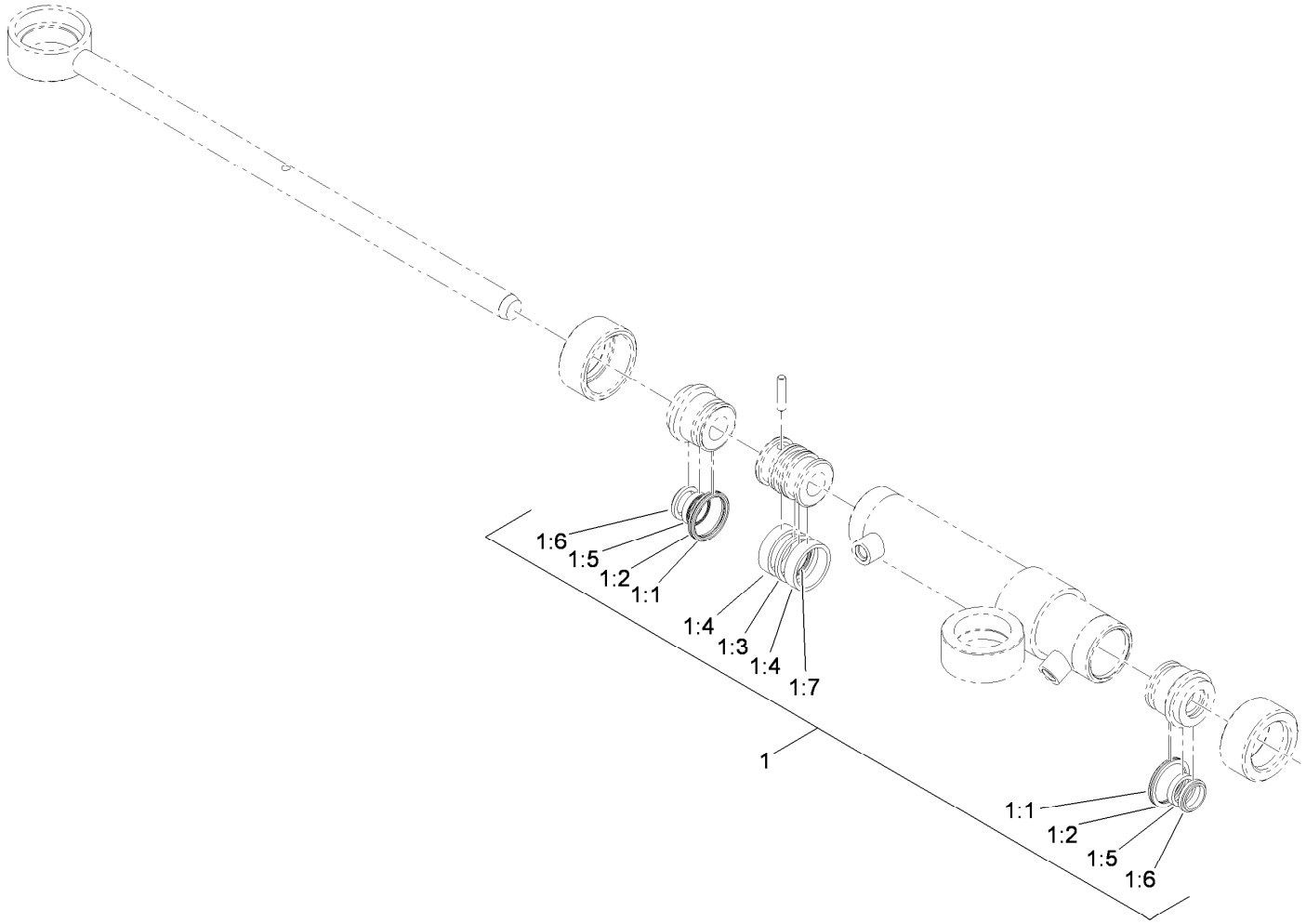


# Hydraulic Cylinder Assembly No. 117-4480

| *Ref.* | *Part Number* | *Qty.* | *Description* |
|---|---|---|---|
| 1 | 119-7124 | 1 | Kit-Seal |
| 1:1 | | 2 | O-Ring ● |
| 1:2 | | 2 | Ring-Backup ● |
| 1:3 | | 1 | Seal-Psp ● |
| 1:4 | | 2 | Ring-Wear ● |
| 1:5 | | 2 | Seal-Bs ● |
| 1:6 | | 2 | Seal-Dust ● |
| 1:7 | | 1 | O-Ring ● |

● Not serviced separately

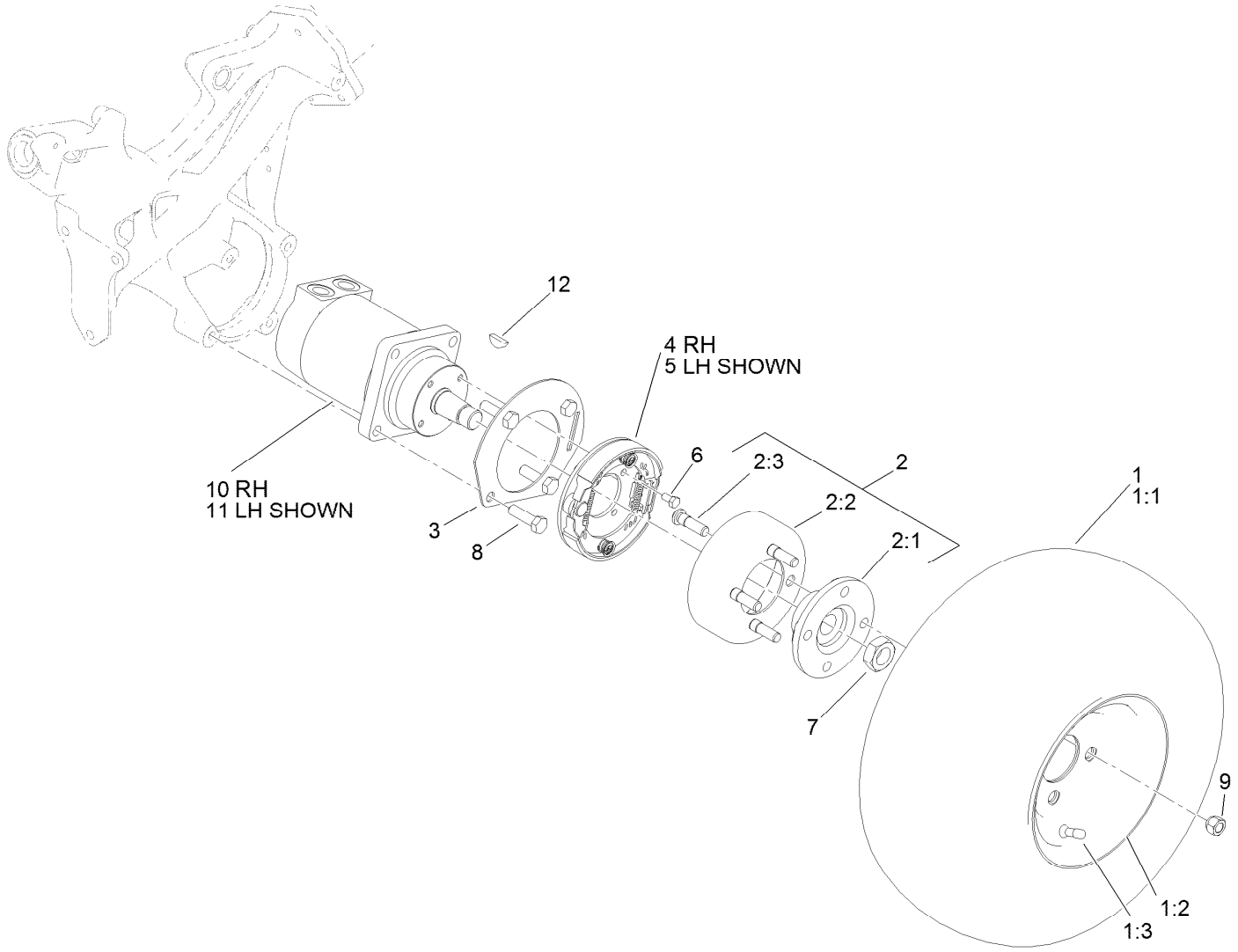


# Front Wheel Assembly

| Ref. | Part Number | Qty. | Description |
|---|---|---|---|
| 1 | | 2 | Wheel And Tire ASM ● |
| 1:1 | 117-9031 | 1 | Tire |
| 1:2 | 117-9032 | 1 | Rim |
| 1:3 | 232-27 | 1 | Stem-Valve |
| 2 | 115-2661 | 2 | Brake Drum ASM |
| 2:1 | 115-2662-03 | 1 | Hub-Wheel |
| 2:2 | 115-2663 | 1 | Drum-Brake |
| 2:3 | 85-6540 | 4 | Stud-Drive |
| 3 | 114-9998-03 | 2 | Tab-Lever, Brake |

| Ref. | Part Number | Qty. | Description |
|---|---|---|---|
| 4 | 115-9441 | 1 | RH Brake ASM |
| 5 | 115-9440 | 1 | LH Brake ASM |
| 6 | 322-2 | 8 | Screw-HH |
| 7 | 26-3790 | 2 | Nut-Lock |
| 8 | 325-7 | 8 | Screw-HH |
| 9 | 242-50 | 8 | Nut-Lug |
| 10 | 117-4302 | 1 | RH Wheel Motor ASM |
| 11 | 117-4303 | 1 | LH Wheel Motor ASM |
| 12 | 3257-42 | 1 | Key-Woodruff |

● Not serviced separately

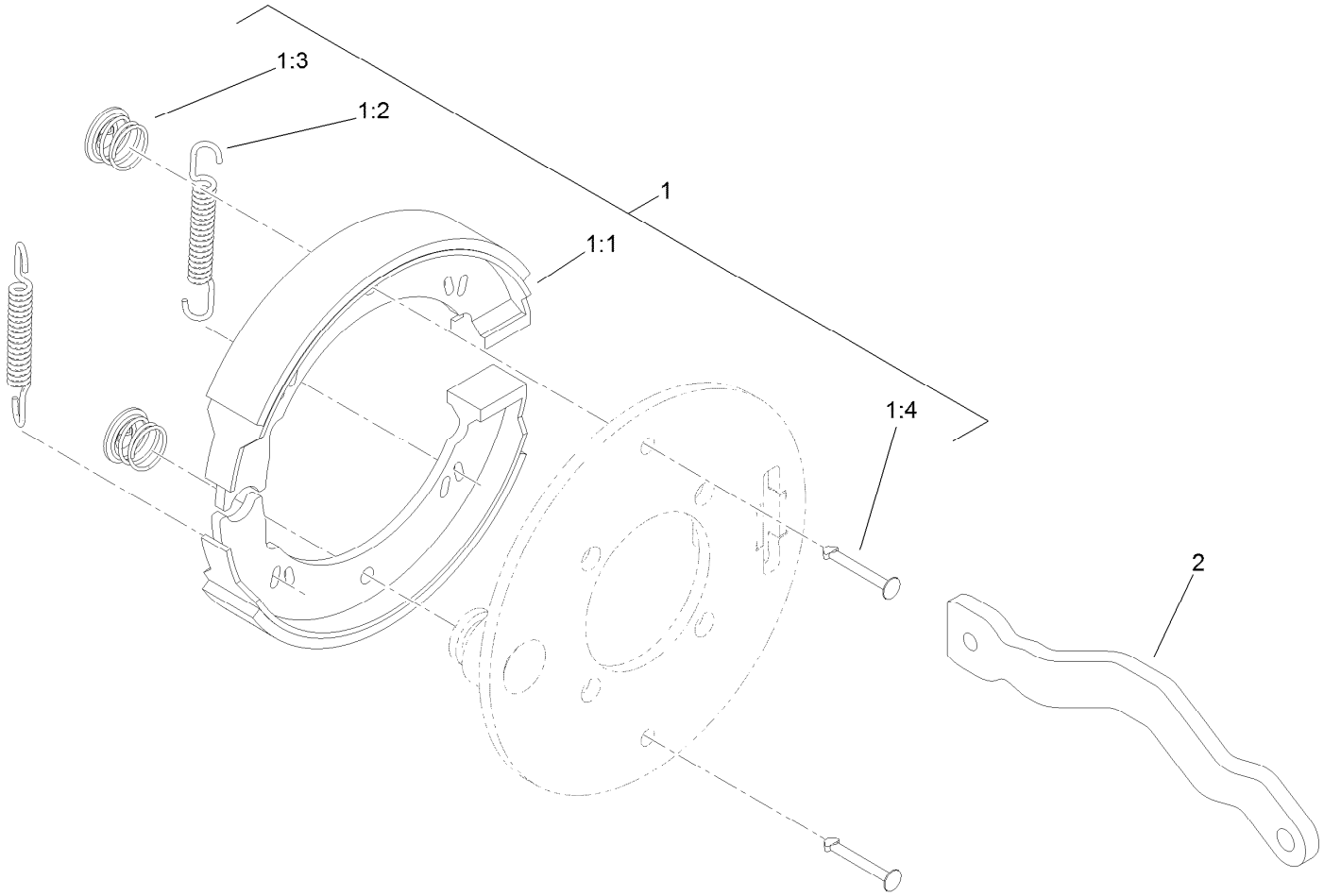


# Right Hand Brake Assembly No. 115-9441

| *Ref.* | *Part Number* | *Qty.* | *Description* |
|---|---|---|---|
| 1 | 119-7136 | 1 | Kit-Brake |
| 1:1 | | 2 | Shoe-Brake ● |
| 1:2 | | 2 | Spring ● |
| 1:3 | | 2 | Clip ● |
| 1:4 | | 2 | Pin-Retainer ● |
| 2 | 115-5789 | 1 | Lever-Brake, RH |

● Not serviced separately

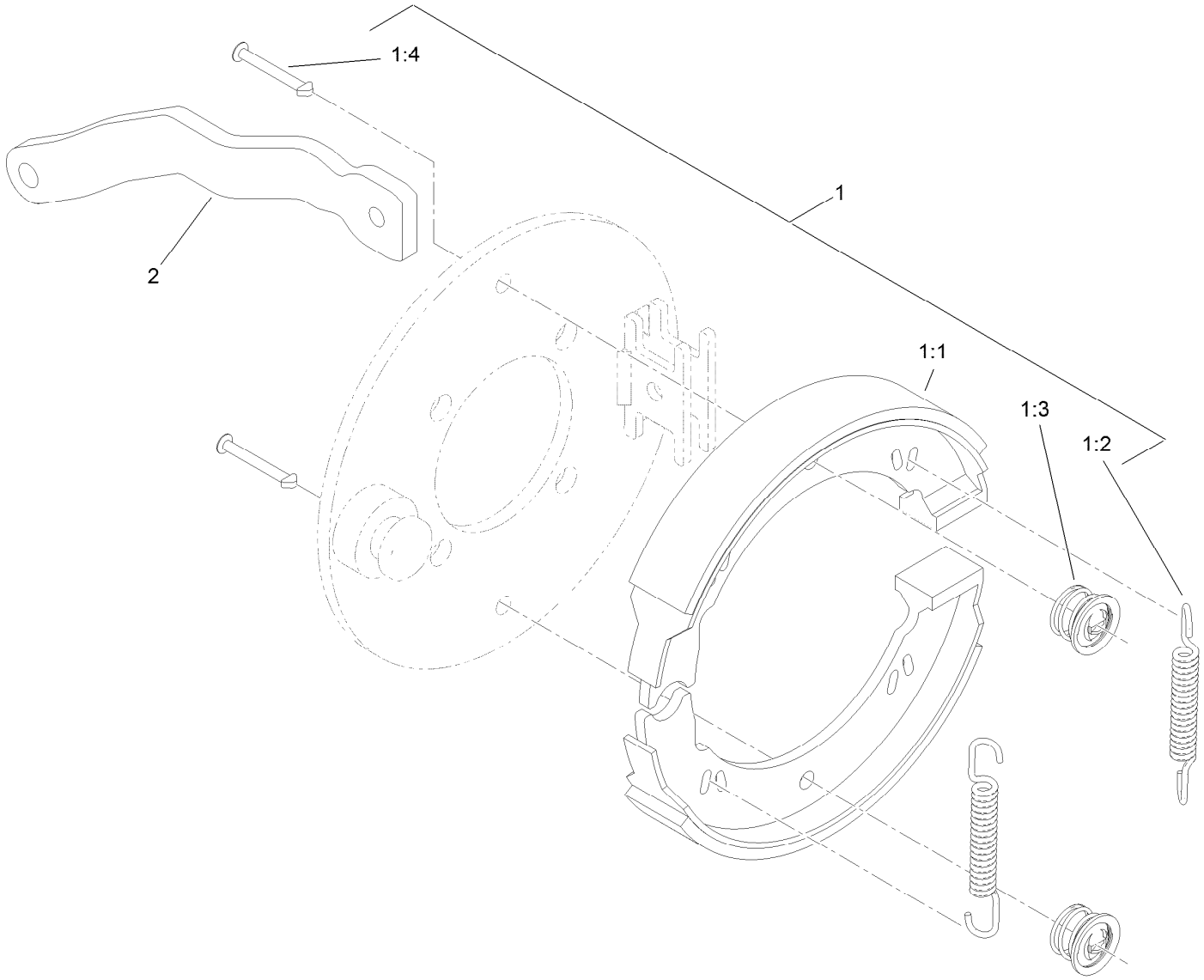


# Left Hand Brake Assembly No. 115-9440

| *Ref.* | *Part Number* | *Qty.* | *Description* |
|---|---|---|---|
| 1 | 119-7136 | 1 | Kit-Brake |
| 1:1 | | 2 | Shoe-Brake ● |
| 1:2 | | 2 | Spring ● |
| 1:3 | | 2 | Clip ● |
| 1:4 | | 2 | Pin-Retainer ● |
| 2 | 115-2664 | 1 | Lever-Brake, LH |

● Not serviced separately

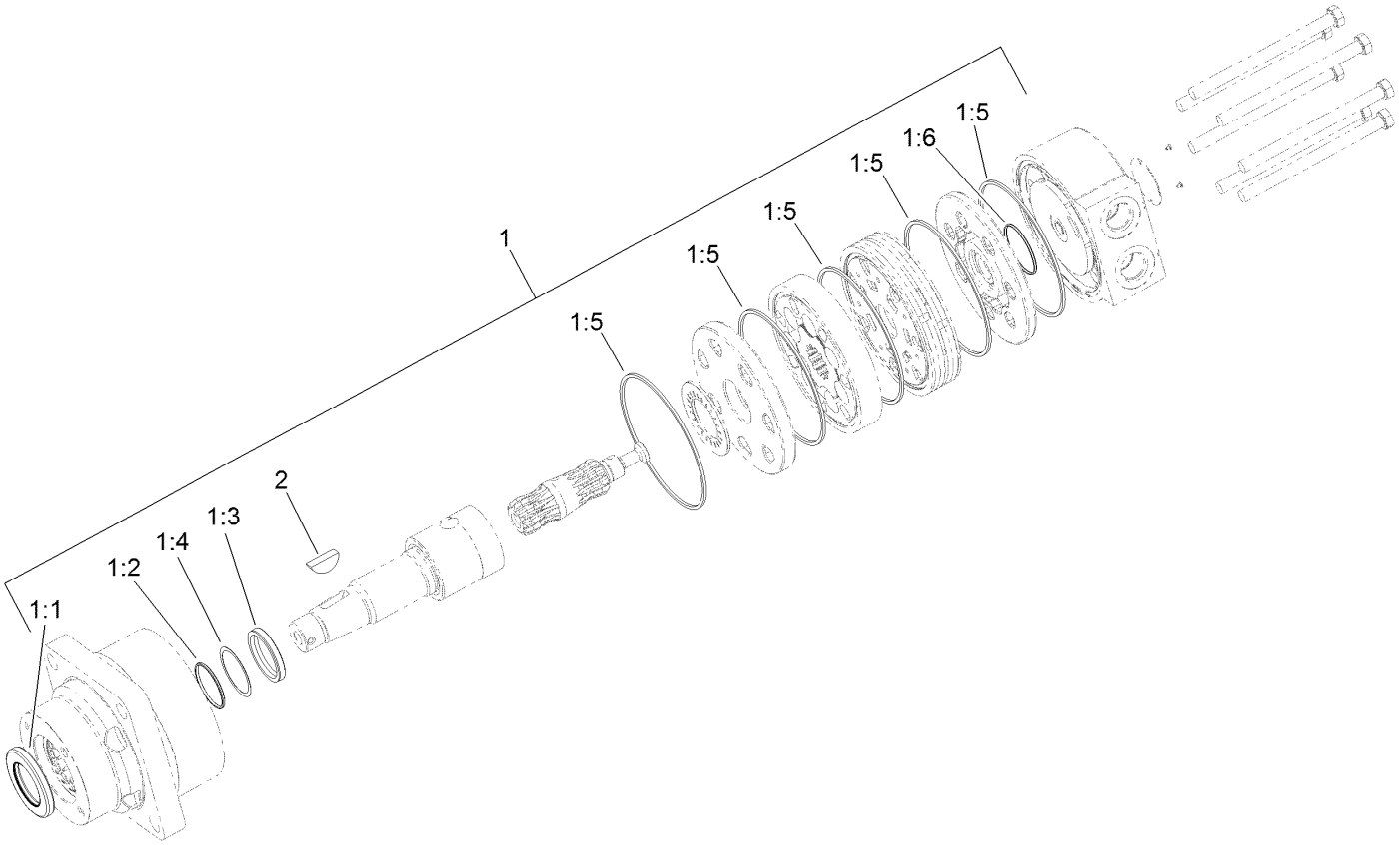


# Right Hand Wheel Motor Assembly No. 117-4302

| *Ref.* | *Part Number* | *Qty.* | *Description* |
|---|---|---|---|
| 1 | 94-8178 | 1 | Seal Kit |
| 1:1 | | 1 | Seal-Dirt And Water ● |
| 1:2 | | 1 | Backup-Ring ● |
| 1:3 | | 1 | Seal-Shaft ● |
| 1:4 | | 1 | Washer-Backup ● |
| 1:5 | | 5 | Seal-Square, Ring (Inner) ● |
| 1:6 | | 1 | Seal-Commutator ● |
| 2 | 3257-42 | 1 | Key-Woodruff |

● Not serviced separately

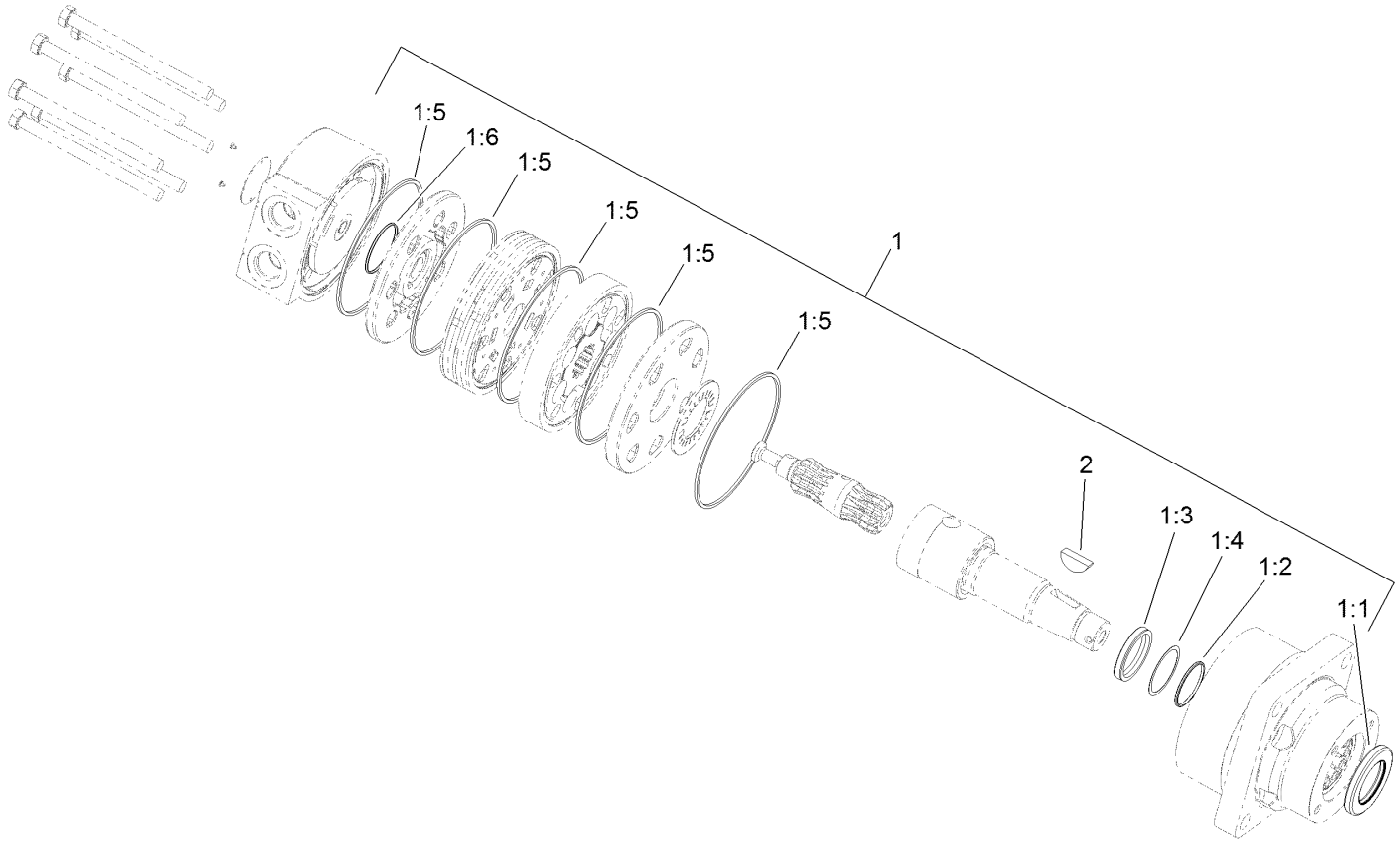


# Left Hand Wheel Motor Assembly No. 117-4303

| *Ref.* | *Part Number* | *Qty.* | *Description* |
|---|---|---|---|
| 1 | 94-8178 | 1 | Seal Kit |
| 1:1 | | 1 | Seal-Dirt And Water ● |
| 1:2 | | 1 | Backup-Ring ● |
| 1:3 | | 1 | Seal-Shaft ● |
| 1:4 | | 1 | Washer-Backup ● |
| 1:5 | | 5 | Seal-Square, Ring (Inner) ● |
| 1:6 | | 1 | Seal-Commutator ● |
| 2 | 3257-42 | 1 | Key-Woodruff |

● Not serviced separately

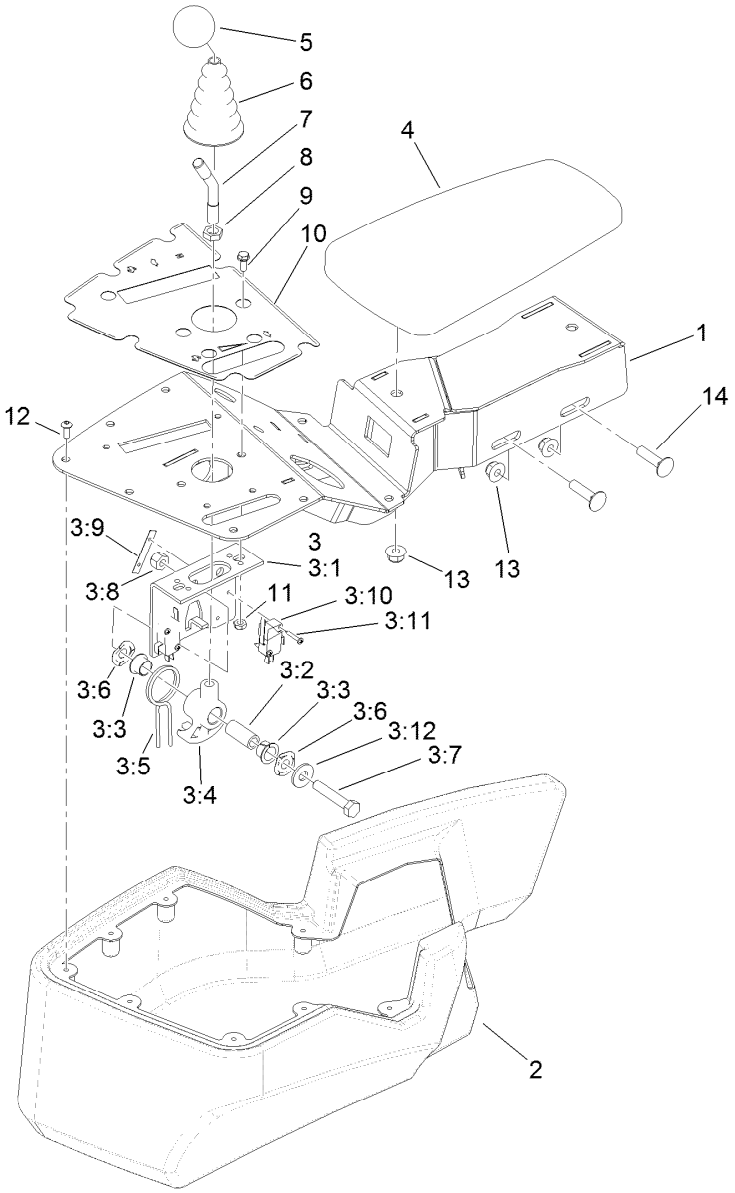


# Console and Reel Control Assembly

| Ref. | Part Number | Qty. | Description |
|---|---|---|---|
| 1 | 120-2049-03 | 1 | Console |
| 2 | 121-5152 | 1 | Cover-Console |
| 3 | 106-4167 | 1 | Joystick Bracket ASM |
| 3:1 | 115-5357-03 | 1 | Bracket-Joystick |
| 3:2 | 106-4192 | 1 | Spacer |
| 3:3 | 93-5547 | 2 | Bushing-Nylon |
| 3:4 | 105-7507 | 1 | Hub-Pivot, Joystick |
| 3:5 | 105-8289 | 1 | Spring-Torsion |
| 3:6 | 106-4193 | 2 | Washer-Finger, Spring |
| 3:7 | 322-9 | 1 | Screw-HH |
| 3:8 | 3296-29 | 1 | Nut-Lock, NI |
| 3:9 | 3290-354 | 2 | Nut-Speed |
| 3:10 | 108-6496 | 2 | Switch (W/Boot) |

| Ref. | Part Number | Qty. | Description |
|---|---|---|---|
| 3:11 | 95-3003 | 4 | Screw-PPHTF |
| 3:12 | 3256-3 | 1 | Washer-Flat |
| 4 | 108-7602 | 1 | Rest-Arm |
| 5 | 120-9752 | 1 | Knob-Round, Yellow |
| 6 | 93-5961 | 1 | Boot-Lever |
| 7 | 121-6681 | 1 | Stem-Joystick |
| 8 | 3218-3 | 1 | Nut-Jam |
| 9 | 3290-321 | 2 | Screw-HWH |
| 10 | 121-5169 | 1 | Decal-Console |
| 11 | 3296-12 | 2 | Nut-Lock, NI |
| 12 | 115-9830 | 8 | Screw-HSBH |
| 13 | 104-8300 | 4 | Nut-HF, NI |
| 14 | 3230-3 | 2 | Screw-CARR |

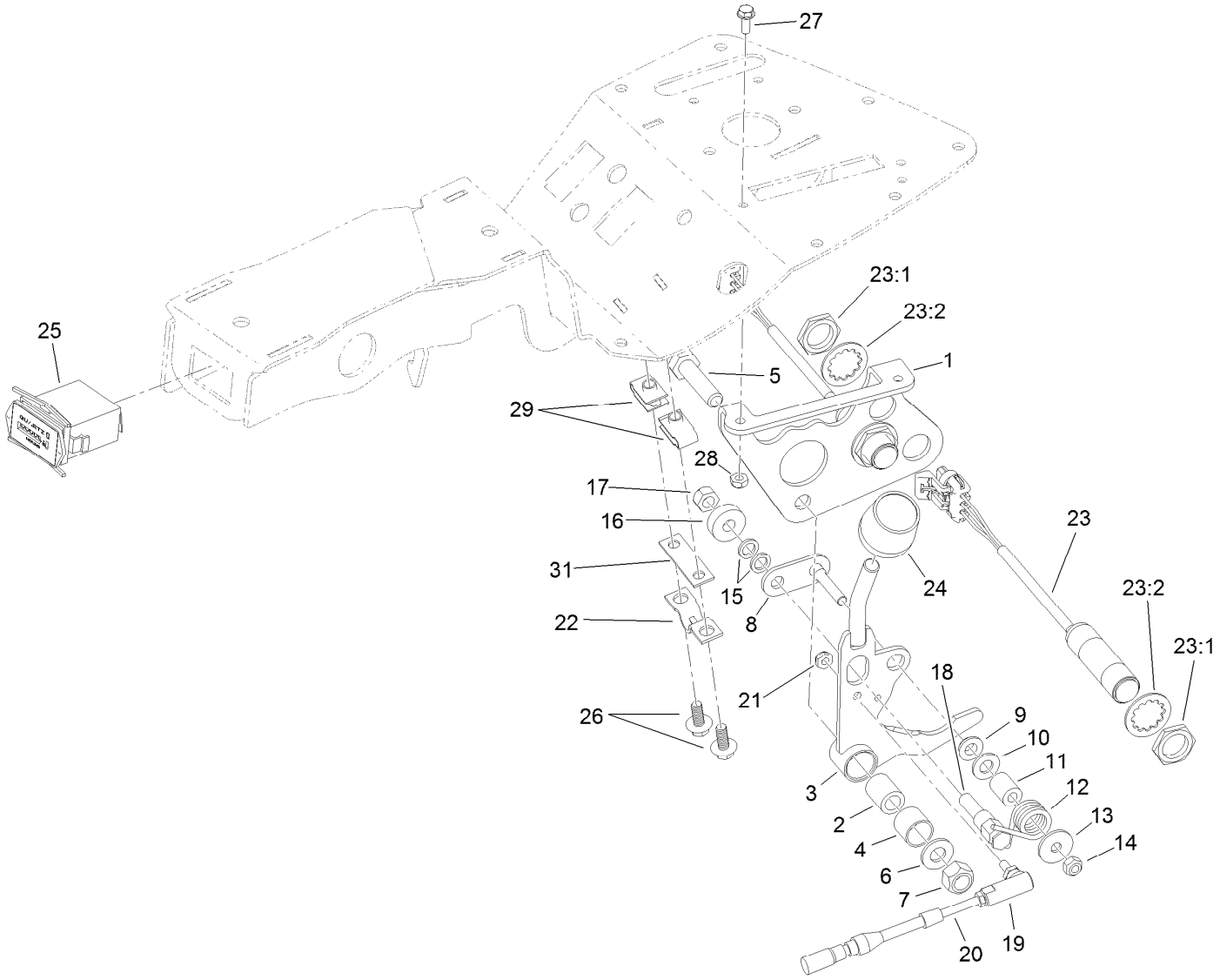


# Traction Interface Control Assembly

| Ref. | Part Number | Qty. | Description |
|---|---|---|---|
| 1 | 115-9774-03 | 1 | Bracket-Function, Lever |
| 2 | 94-1378 | 1 | Tube-Pivot, Handle |
| 3 | 115-9772 | 1 | Handle ASM |
| 4 | 256-311 | 1 | Bushing-Split |
| 5 | 33115-040 | 1 | Screw-HH |
| 6 | 3256-24 | 1 | Washer-Flat |
| 7 | 33025-00 | 1 | Nut-Lock, NI |
| 8 | 120-3198 | 1 | Roller-Pivot |
| 9 | 94-9619 | 1 | Bushing |
| 10 | 3256-23 | 1 | Washer-Plain |
| 11 | 94-9618 | 1 | Spacer-Spring |
| 12 | 94-9620 | 1 | Spring-Torsion |
| 13 | 3256-67 | 1 | Washer |
| 14 | 33023-00 | 1 | Nut-Lock |
| 15 | 75-5470 | 2 | Spacer-Bearing |
| 16 | 251-259 | 1 | Bearing-Ball |

| Ref. | Part Number | Qty. | Description |
|---|---|---|---|
| 17 | 33024-00 | 1 | Nut-Lock, NI |
| 18 | 94-9617 | 1 | Pin-Spring |
| 19 | 2411-38 | 1 | Joint-Ball |
| 20 | 115-8247 | 1 | Cable-Lock, Neutral |
| 21 | 3296-27 | 1 | Nut-Lock, NI |
| 22 | 93-2279 | 1 | Clamp-Cable |
| 23 | 115-5300 | 2 | Proximity Switch ASM |
| 23:1 | 117-3207 | 2 | Nut-Hex |
| 23:2 | 117-3208 | 2 | Washer-Lock, Internal Tooth |
| 24 | 120-9753 | 1 | Knob-Cylindrical, Orange |
| 25 | 1-513374 | 1 | Meter-Hour |
| 26 | 99-6810 | 2 | Screw-HHF |
| 27 | 3290-321 | 2 | Screw-HWH |
| 28 | 3296-12 | 2 | Nut-Lock, NI |
| 29 | 107069 | 2 | Clip |
| 31 | 125-5653 | 1 | Shim |

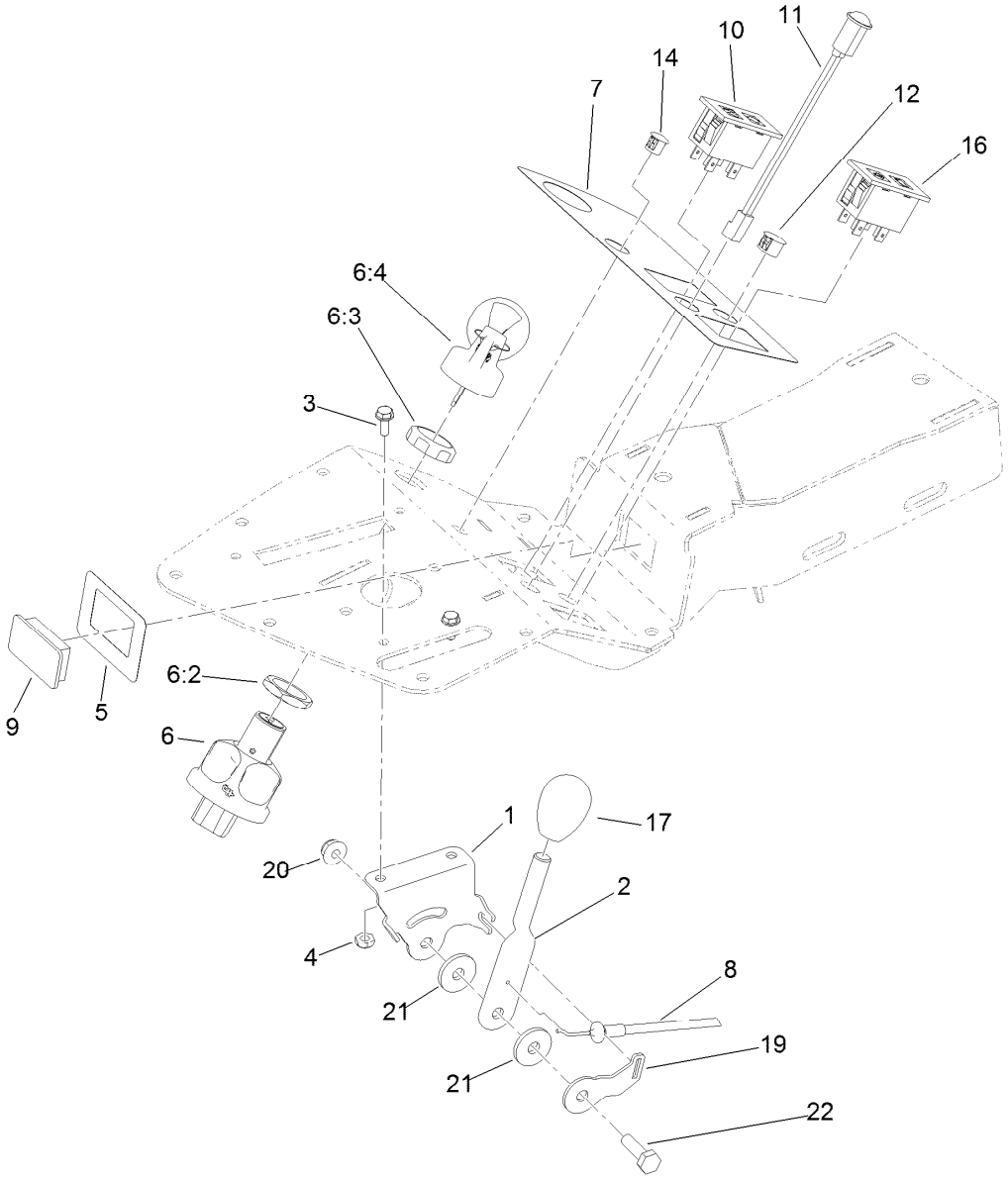


# Ignition, Throttle and Choke Control Assembly

| Ref. | Part Number | Qty. | Description |
|---|---|---|---|
| 1 | 125-3013 | 1 | Bracket-Throttle |
| 2 | 125-3014 | 1 | Lever-Throttle |
| 3 | 3290-321 | 2 | Screw-HWH |
| 4 | 3296-12 | 2 | Nut-Lock, NI |
| 5 | 121-5172 | 1 | Decal-Lights, Console |
| 6 | 121-5159 | 1 | Ignition Switch ASM |
| 6:2 | 121-5160 | 1 | Nut-Hex |
| 6:3 | 121-5161 | 1 | Nut-Face |
| 6:4 | 121-5162 | 1 | Set-Key, Ignition |
| 7 | 121-5170 | 1 | Decal-Console, HYD |
| 8 | 125-3017 | 1 | Cable-Throttle |

| Ref. | Part Number | Qty. | Description |
|---|---|---|---|
| 9 | 99-7420 | 1 | Plug-Hole |
| 10 | 100-8071 | 1 | Lamp-Warning |
| 11 | 95-7652 | 1 | Light-Indicator |
| 12 | 2410-64 | 1 | Plug-Button |
| 14 | 104-9368 | 1 | Plug-Dome |
| 16 | 100-8070 | 1 | Lamp-Warning |
| 17 | 120-9751 | 1 | Knob-Oval, Black |
| 19 | 125-3015 | 1 | Bracket-Clamp, Cable |
| 20 | 104-7201 | 1 | Nut-HF, NI |
| 21 | 66-2921 | 2 | Washer-Friction |
| 22 | 321-5 | 1 | Screw-HH |

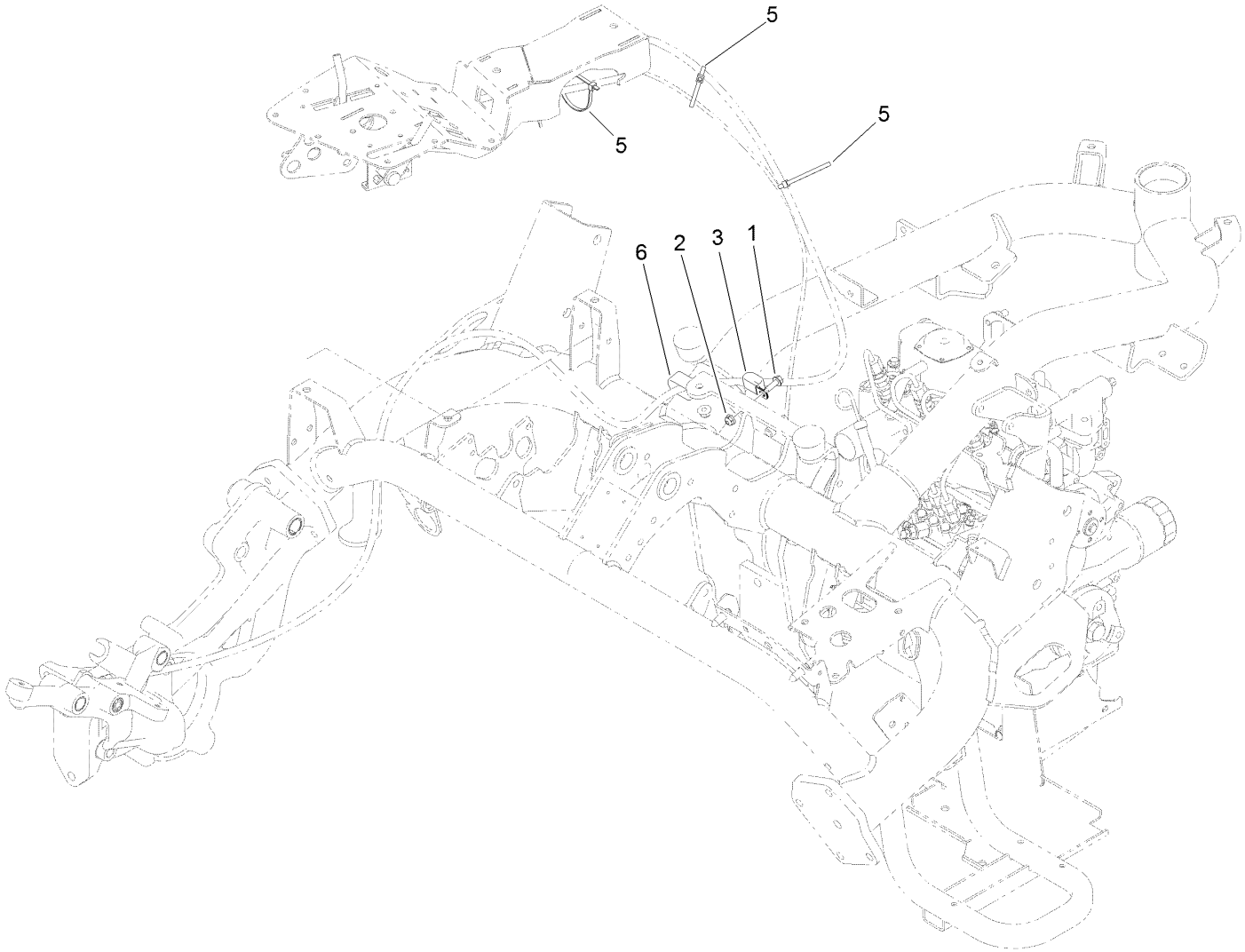


# Console Cable Routing Assembly

| *Ref.* | *Part Number* | *Qty.* | *Description* |
|---|---|---|---|
| 1 | 115-5103 | 1 | Screw-HHF |
| 2 | 104-7201 | 1 | Nut-HF, NI |
| 3 | 119-8153 | 1 | Clamp-R, Double Tube |
| 5 | 3290-379 | 4 | Tie-Cable |
| 6 | 120-1959 | 1 | Clamp |

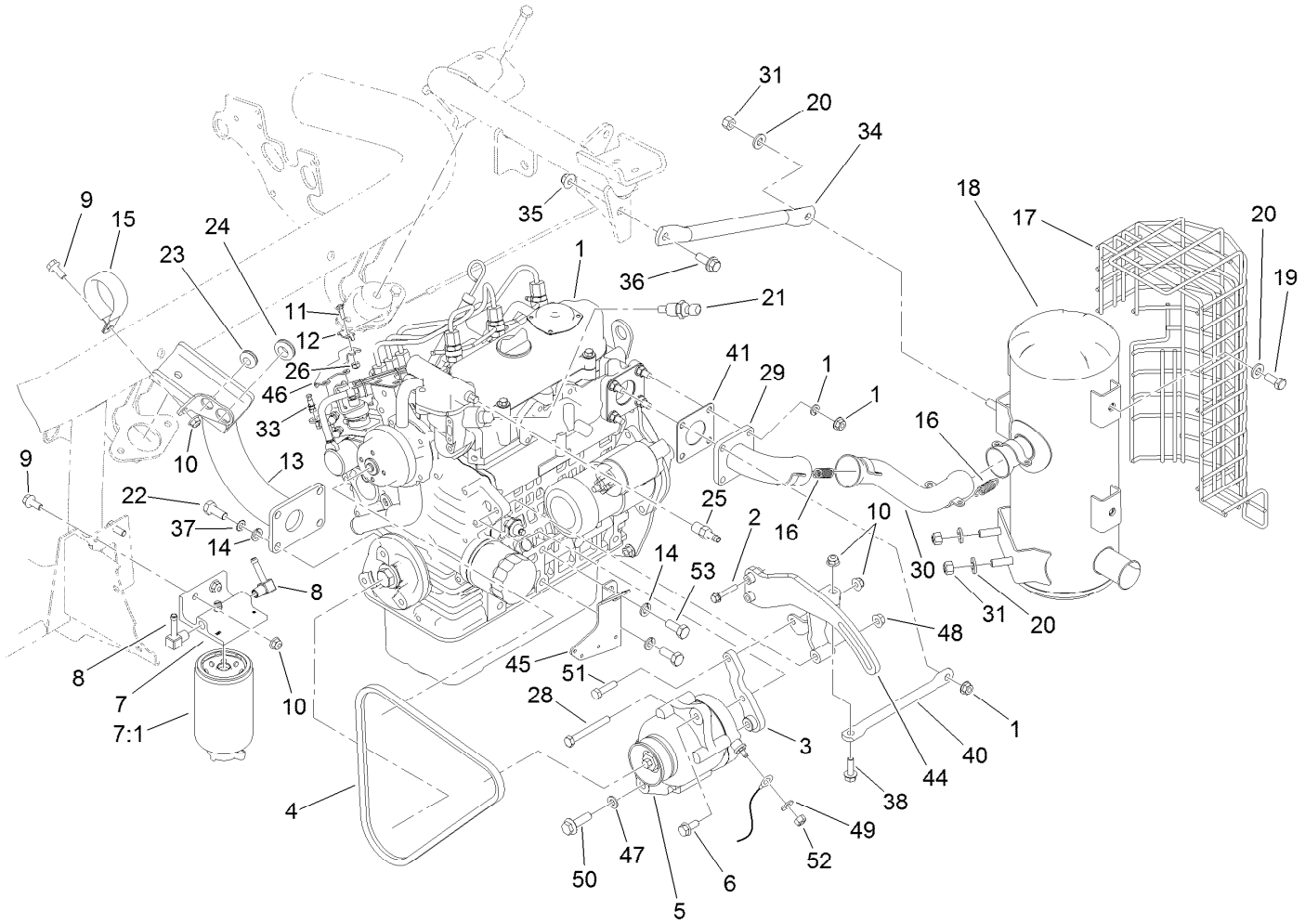


# Engine and Exhaust Assembly

| Ref. | Part Number | Qty. | Description |
|---|---|---|---|
| 1 | 119-2141 | 1 | Engine ASM |
| 2 | 33103-035 | 2 | Screw-HHF |
| 3 | 119-4428-03 | 1 | Bracket-Alternator |
| 4 | 119-4486 | 1 | Belt-V, Fan |
| 5 | 117-5541 | 1 | 60 Amp Alternator ASM |
| 6 | 33104-020 | 1 | Screw-HHF |
| 7 | 110-9044 | 1 | Separator-Filter |
| 7:1 | 110-9049 | 1 | Filter-Spin On, Fuel/Water |
| 8 | 353-707 | 2 | Fitting-HYD, 90 DEG |
| 9 | 3234-47 | 2 | Screw-HHF |
| 10 | 104-8300 | 5 | Nut-HF, NI |
| 11 | 3290-134 | 1 | Screw |
| 12 | 613385 | 1 | Clamp-Cable |
| 13 | 119-2128-03 | 1 | Support-Engine |
| 14 | 42-9600 | 6 | Washer-Lock |
| 15 | 115-9469 | 1 | Clamp-R |
| 16 | 104-6478 | 4 | Spring-Extension |
| 17 | 115-8718-03 | 1 | Shield-Muffler |
| 18 | 120-1950 | 1 | Muffler |
| 19 | 323-5 | 4 | Screw-HH |
| 20 | 100-4852 | 8 | Washer-Hardened |

| Ref. | Part Number | Qty. | Description |
|---|---|---|---|
| 21 | 119-4478 | 1 | Sender-Temperature |
| 22 | 43-0090 | 4 | Screw-HH |
| 23 | 1-633630 | 1 | Grommet |
| 24 | 237-124 | 2 | Grommet |
| 25 | 353-783 | 1 | Fitting-STR |
| 26 | 3296-2 | 1 | Nut-Lock, NI |
| 28 | 119-8194 | 1 | Screw-HH |
| 29 | 114-8009 | 1 | Plate-Exhaust |
| 30 | 114-8013 | 1 | Pipe-Exhaust |
| 31 | 32152-2 | 4 | Nut-Lock, Cone |
| 33 | 108-5928 | 1 | Swivel-Stop, Cable |
| 34 | 120-1956-03 | 1 | Tube-Brace |
| 35 | 104-8301 | 1 | Nut-HF, NI |
| 36 | 3234-42 | 1 | Screw-HHF |
| 37 | 3255-8 | 1 | Washer-Lock |
| 38 | 3234-29 | 2 | Screw-HHF |
| 40 | 120-1961-03 | 1 | Tube-Brace |
| 41 | 99-8343 | 1 | Gasket-Muffler |
| 44 | 119-8182-03 | 1 | Bracket-Alternator |
| 45 | 120-1964-03 | 1 | Bracket-Harness |
| 46 | 125-3016 | 1 | Bracket-Support, Throttle |

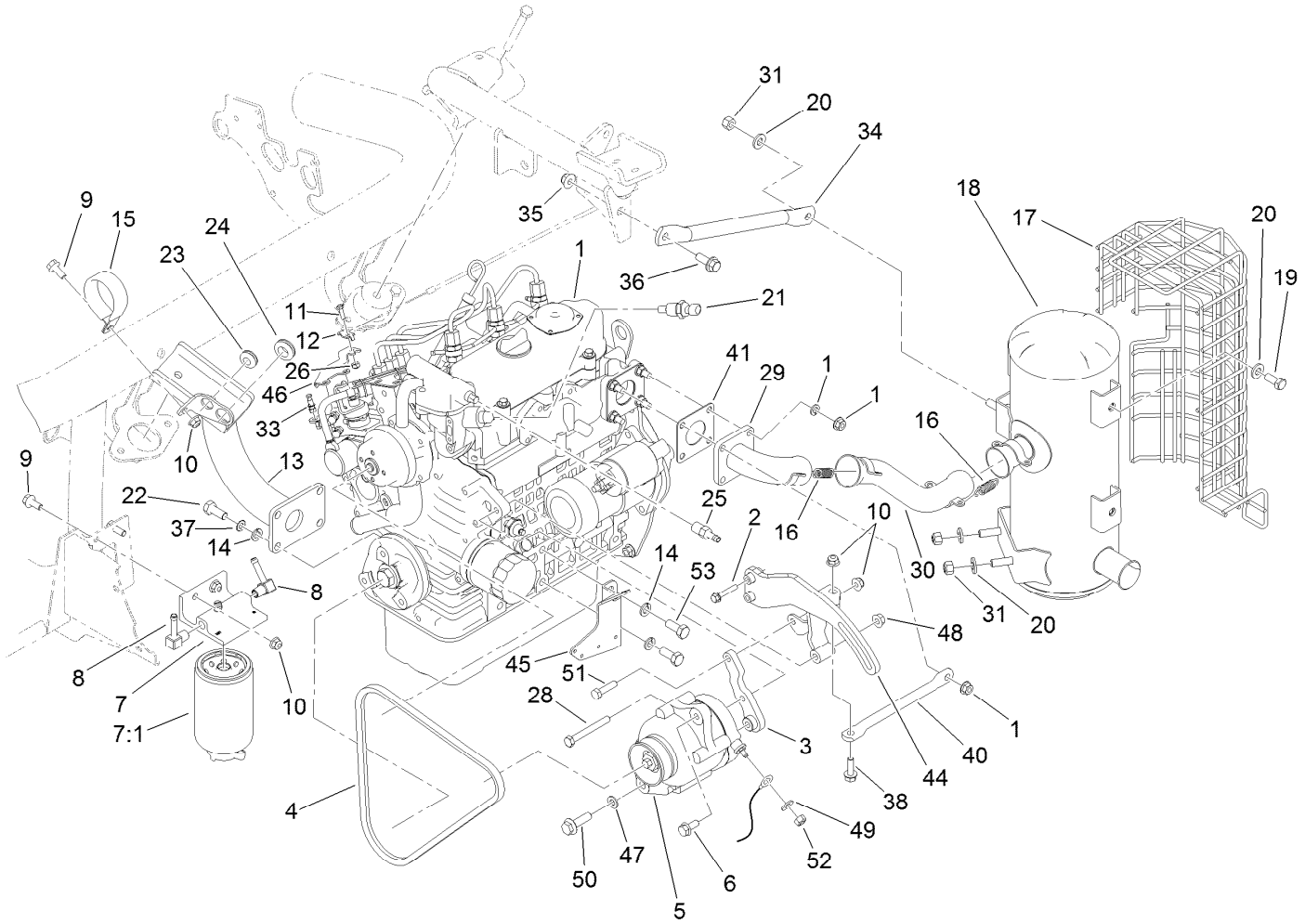


# Engine and Exhaust Assembly (continued)

| Ref. | Part Number | Qty. | Description |
|---|---|---|---|
| 47 | 3256-23 | 1 | Washer-Plain |
| 48 | 33004-00 | 1 | Nut-HF |
| 49 | 3256-2 | 1 | Washer-Flat |
| 50 | 33105-035 | 1 | Screw-HHF |
| 51 | 322-6 | 1 | Screw-HH |
| 52 | 33013-00 | 1 | Nut-Hex |
| 53 | 63-7790 | 2 | Screw-Cap |

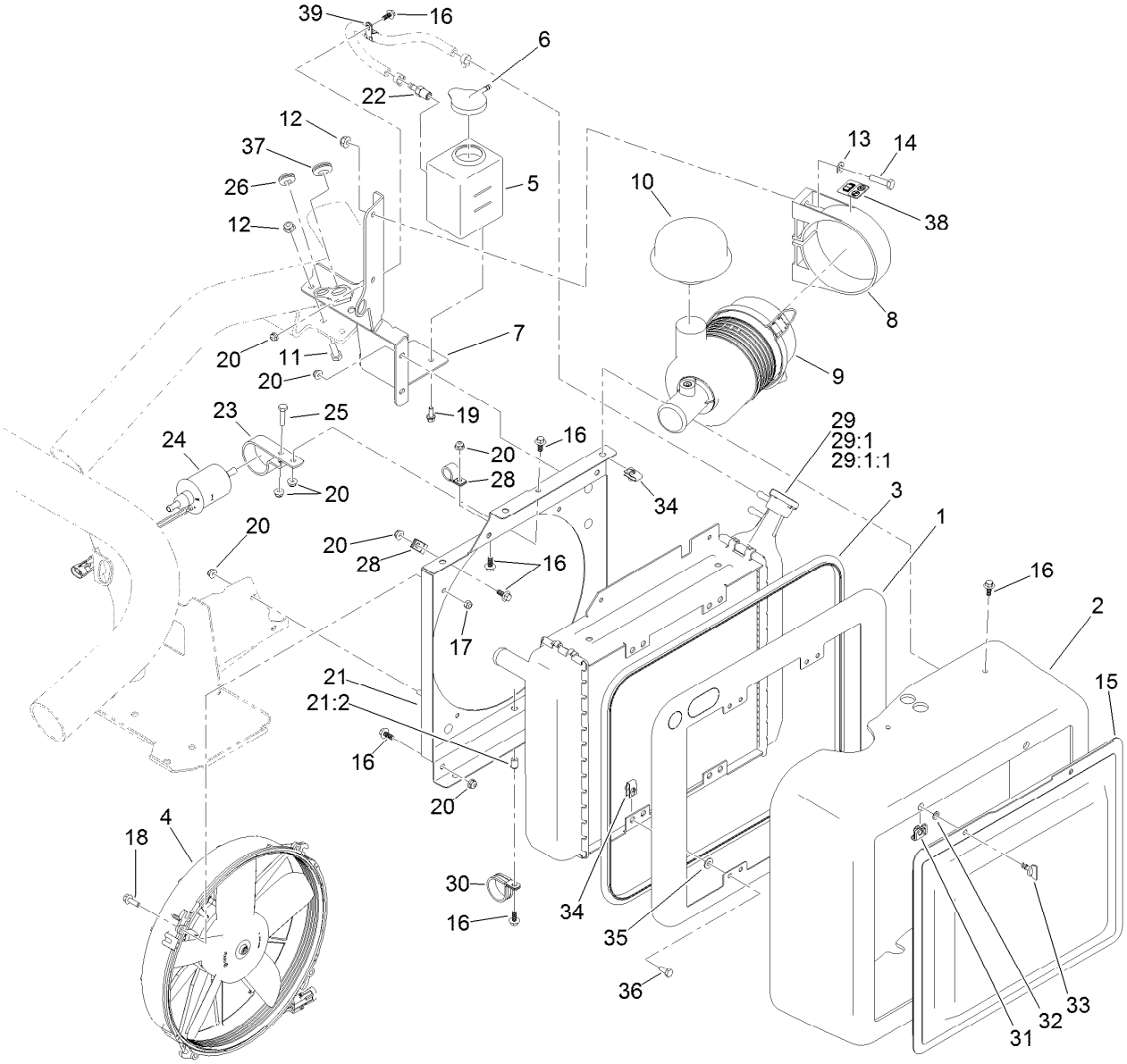


# Radiator, Fuel Pump and Air Cleaner Assembly

| Ref. | Part Number | Qty. | Description |
|---|---|---|---|
| 1 | 117-9307-03 | 1 | Panel-Seal, Radiator |
| 2 | 117-9296 | 1 | Shroud-Radiator |
| 3 | 117-9308 | 1 | Trim-Seal |
| 4 | 115-5765 | 1 | Fan |
| 5 | 120-5260 | 1 | Tank-Overflow |
| 6 | 1-643164 | 1 | Cap-Tank, Overflow |
| 7 | 120-2021-03 | 1 | Bracket-Cleaner, Air |
| 8 | 95-5806 | 1 | Bracket-Mounting, Air Cleaner |
| 9 | 95-5805 | 1 | Air Cleaner ASM |
| 10 | 46-7510 | 1 | Hood-Inlet, Air |
| 11 | 322-4 | 2 | Screw-HH |
| 12 | 104-8300 | 4 | Nut-HF, NI |
| 13 | 3256-23 | 2 | Washer-Plain |
| 14 | 322-6 | 2 | Screw-HH |
| 15 | 117-9311-03 | 1 | Screen |
| 16 | 99-6810 | 13 | Screw-HHF |
| 17 | 110-8451 | 4 | Nut-Hex, NI |
| 18 | 33103-020 | 4 | Screw-HHF |
| 19 | 3234-33 | 2 | Screw-HHF |
| 20 | 104-7201 | 13 | Nut-HF, NI |

| Ref. | Part Number | Qty. | Description |
|---|---|---|---|
| 21 | 119-9038 | 1 | Shroud ASM |
| 21:2 | 32117-2 | 1 | Nut-Clinch |
| 22 | 353-783 | 1 | Fitting-STR |
| 23 | 110-8817 | 1 | Bracket-Pump, Fuel |
| 24 | 110-8806 | 1 | Pump-Fuel |
| 25 | 321-7 | 1 | Screw-HH |
| 26 | 1-633630 | 1 | Grommet |
| 28 | 2412-87 | 2 | Clamp-Cable |
| 29 | 117-9860 | 1 | Radiator |
| 29:1 | 115-7766 | 1 | Cap-Radiator |
| 29:1:1 | 106-6755 | 1 | Decal-Cap, Radiator |
| 30 | 119-9037 | 1 | Clamp-R |
| 31 | 119-1730 | 2 | Receptacle-Clip, Mini |
| 32 | 119-1729 | 2 | Retainer-Stud |
| 33 | 120-1957 | 2 | Stud-Rapier |
| 34 | 107069 | 8 | Clip |
| 35 | 3256-22 | 4 | Washer-Flat |
| 36 | 321-3 | 4 | Screw-HH |
| 37 | 237-124 | 1 | Grommet |
| 38 | 115-8155 | 1 | Decal-Warning |
| 39 | 2412-134 | 1 | Clamp-R |

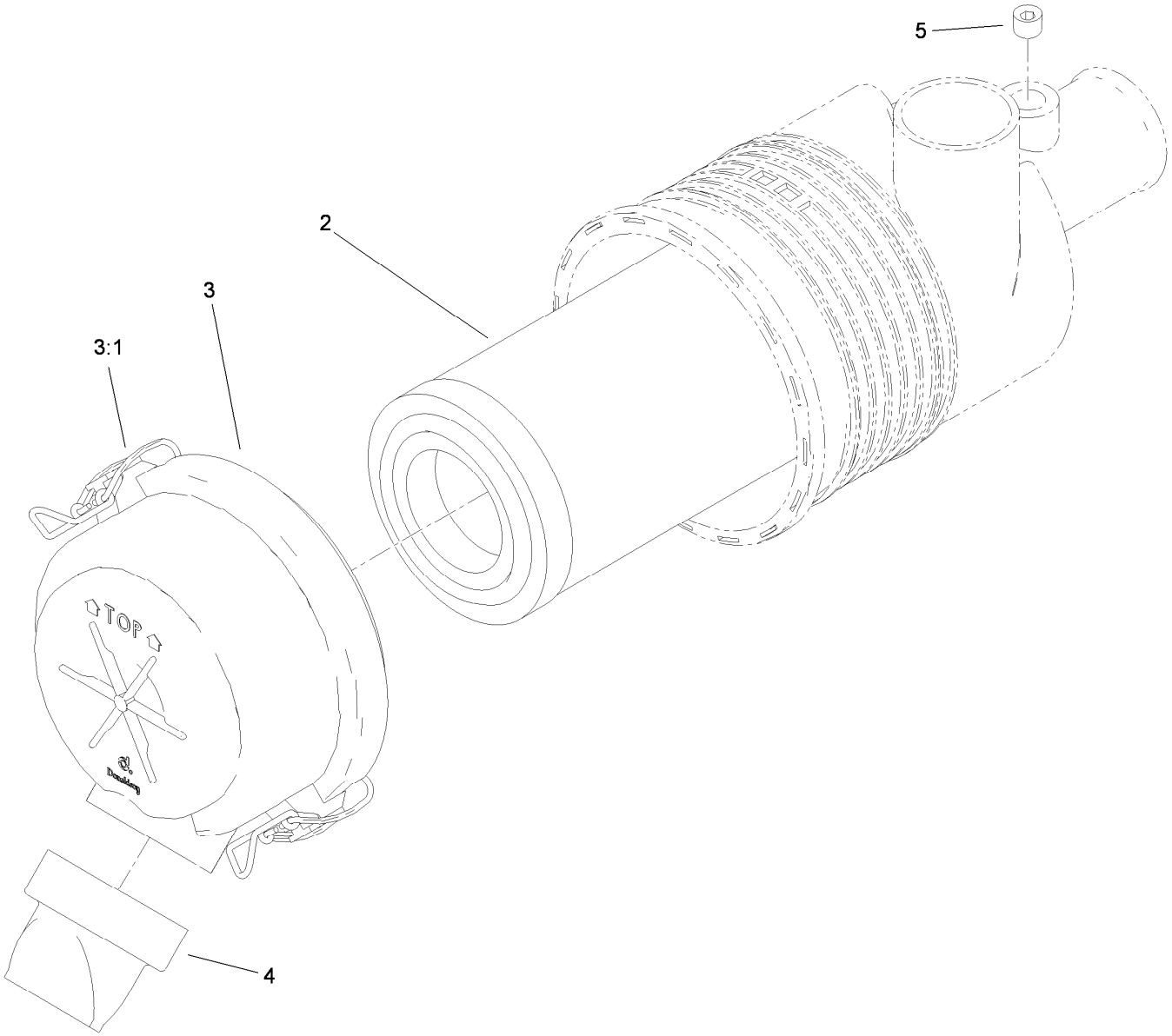


# Air Cleaner Assembly No. 95-5805

| *Ref.* | *Part Number* | *Qty.* | *Description* |
|---|---|---|---|
| 2 | 108-3811 | 1 | Filter-Air |
| 3 | 94-3652 | 1 | Cover ASM |
| 3:1 | 1-643283 | 2 | Latch-Cleaner, Air |
| 4 | 87-9400 | 1 | Valve-Vacuator |
| 5 | 285-17 | 1 | Plug-Pipe |

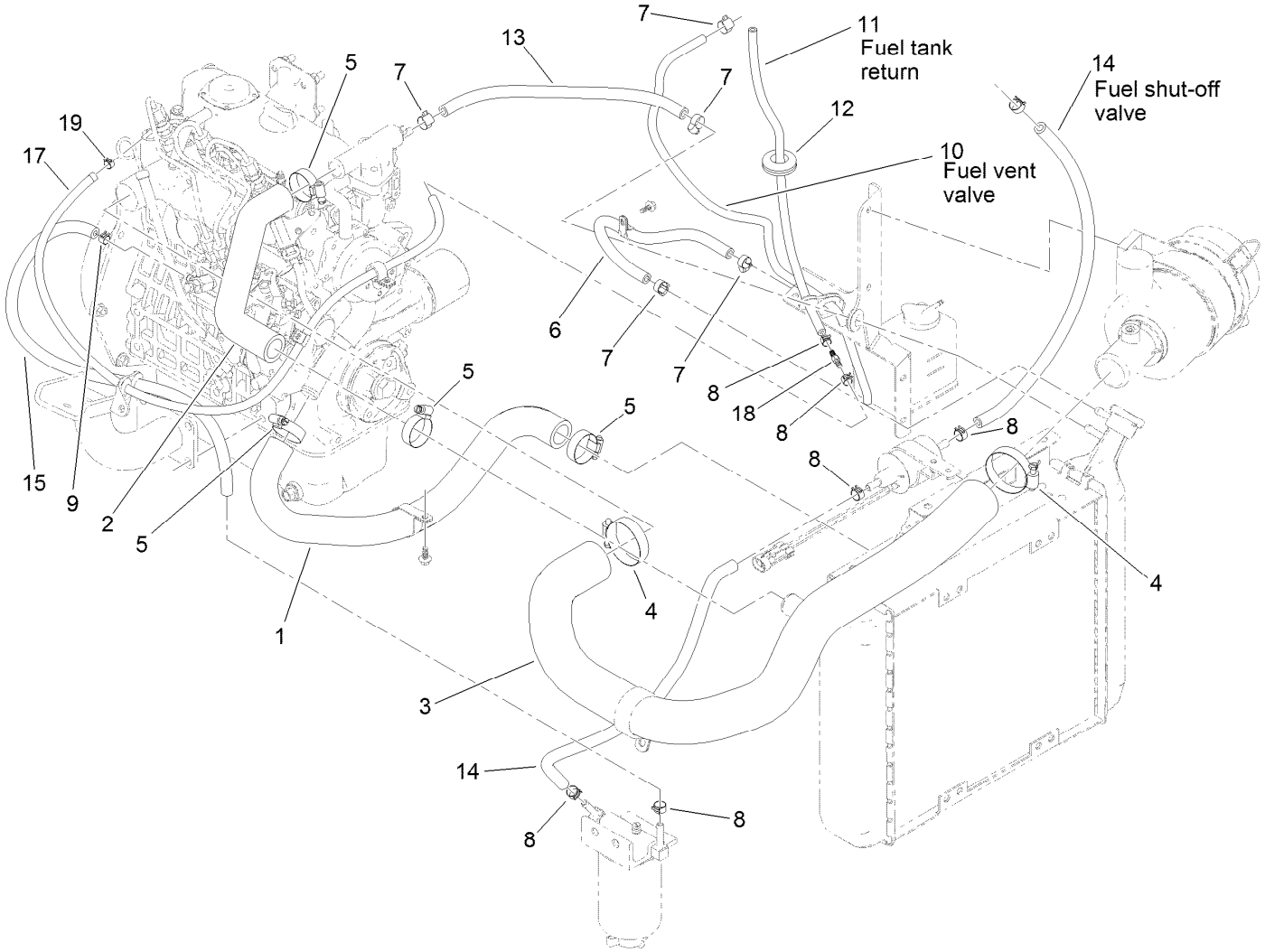


# Radiator, Air Hose and Fuel Line Assembly

| Ref. | Part Number | Qty. | Description |
|---|---|---|---|
| 1 | 117-9268 | 1 | Hose-Radiator, Lower |
| 2 | 117-9261 | 1 | Hose-Radiator, Upper |
| 3 | 117-4481 | 1 | Hose-Air |
| 4 | 2412-92 | 2 | Clamp-Hose |
| 5 | 2412-34 | 4 | Clamp-Hose |
| 6 | 110-4113 | 1 | Hose-Fuel |
| 7 | 2412-108 | 5 | Clamp-Worm |
| 8 | 92-2379 | 6 | Clamp-Hose |
| 9 | 2412-146 | 3 | Clamp-Hose |

| Ref. | Part Number | Qty. | Description |
|---|---|---|---|
| 10 | 119-6074 | 1 | Hose-Fuel |
| 11 | 119-8150 | 1 | Hose-Fuel |
| 12 | 240-4 | 1 | Grommet-Rubber |
| 13 | 119-8136 | 1 | Hose-Fuel |
| 14 | 110-4109 | 2 | Hose-Fuel |
| 15 | 110-6187 | 1 | Hose-Fuel |
| 17 | 119-3517 | 1 | Hose-Fuel |
| 18 | 120-1996 | 1 | Fitting-STR |
| 19 | 2412-80 | 1 | Clamp-Hose |

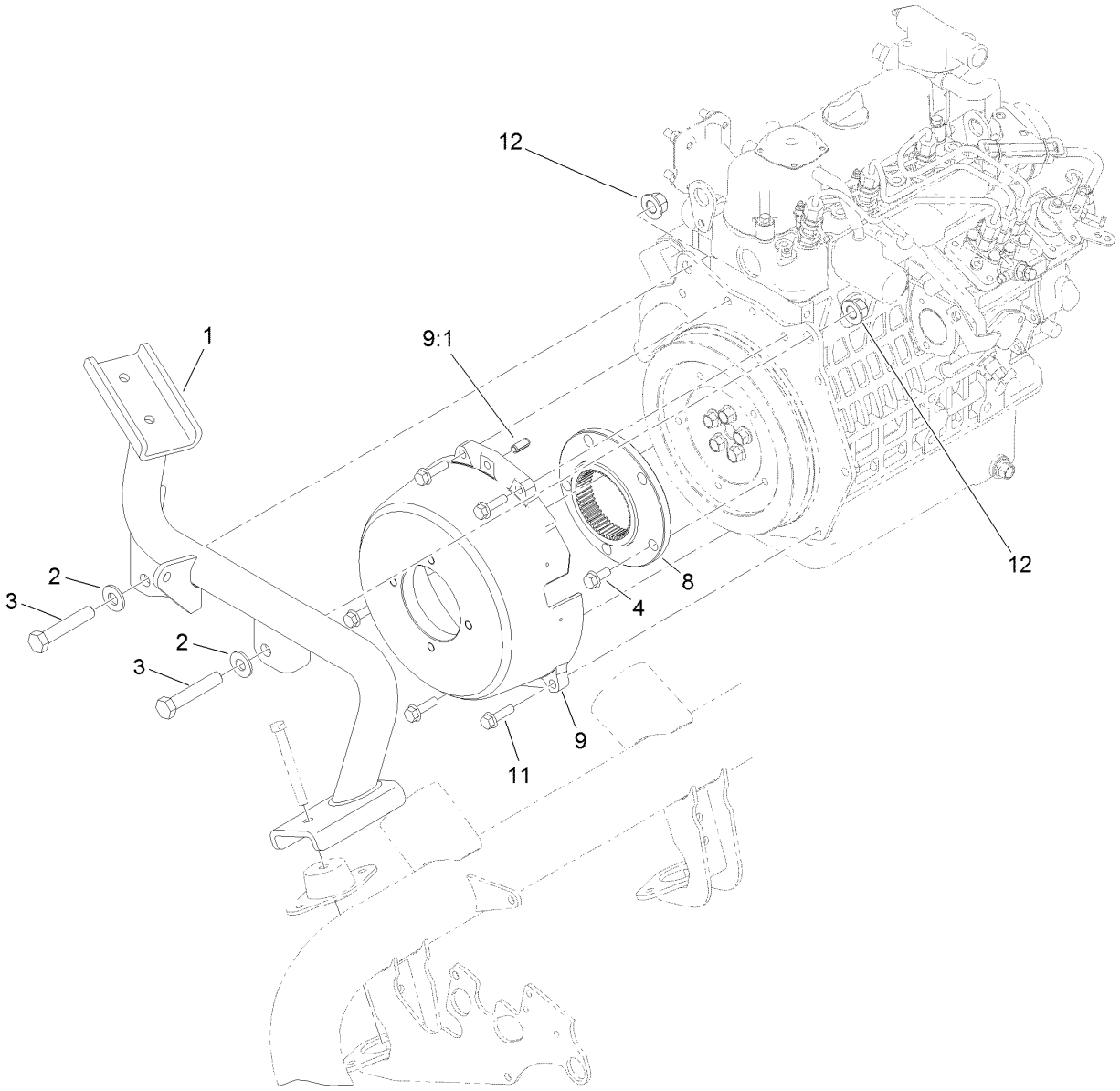


# Bellhousing Assembly

| Ref. | Part Number | Qty. | Description |
|---|---|---|---|
| 1 | 119-4470-03 | 1 | Mount-Engine, Rear |
| 2 | 87-7270 | 2 | Washer-Thrust |
| 3 | 325-11 | 2 | Screw-HH |
| 4 | 33104-020 | 5 | Screw-HHF |
| 8 | 115-8727 | 1 | Flange-Coupling |
| 9 | 119-4412 | 1 | Bellhousing |
| 9:1 | 32121-123 | 1 | Pin-Roll |
| 11 | 33104-030 | 5 | Screw-HHF |
| 12 | 99-5107 | 2 | Nut-Lock |

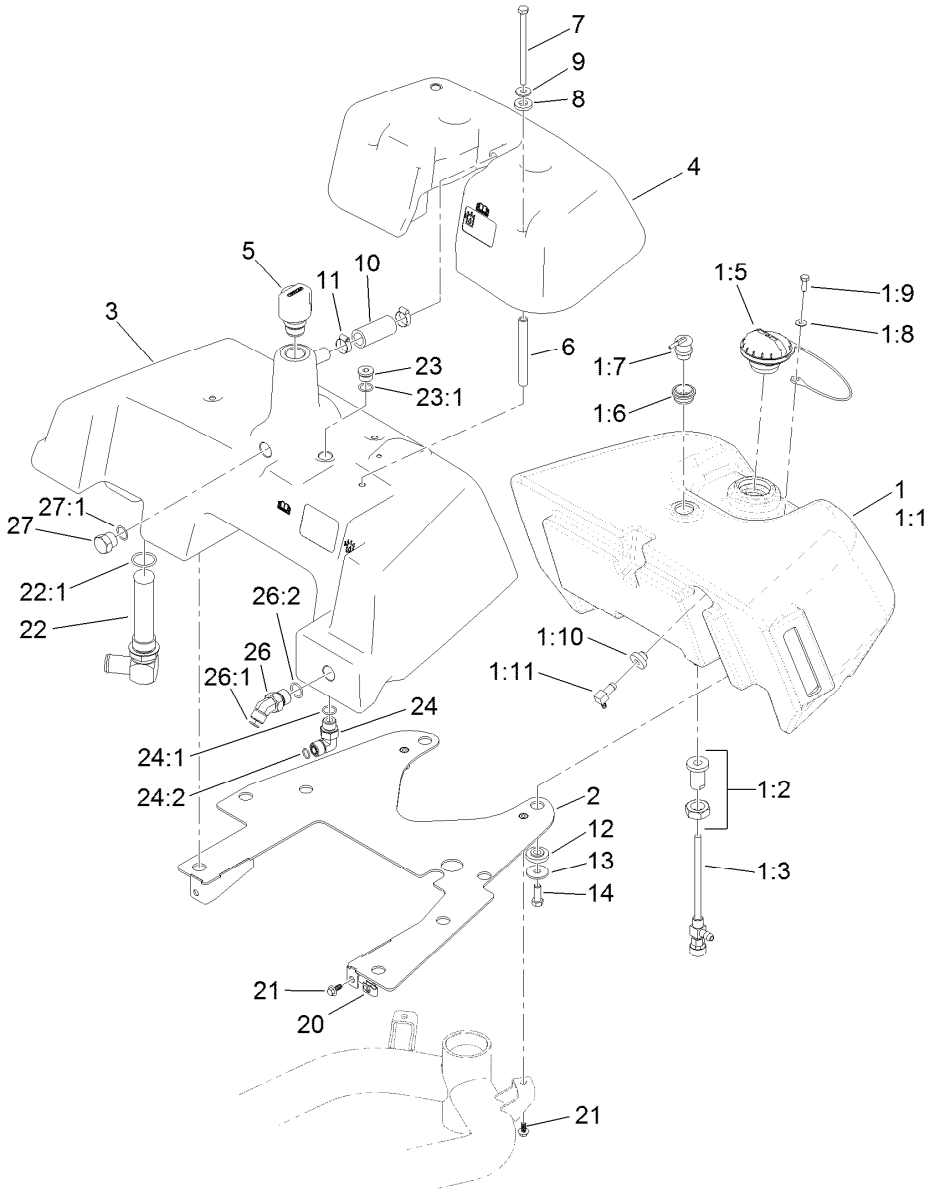


# Fuel and Hydraulic Tank Assembly

| Ref. | Part Number | Qty. | Description |
|---|---|---|---|
| 1 | 121-9572 | 1 | Fuel Tank ASM |
| 1:1 | | 1 | Tank-Fuel, Diesel ● |
| 1:2 | 114-4677 | 1 | Bulkhead ASM |
| 1:3 | 114-4679 | 1 | Fitting-Shut Off, Fuel |
| 1:5 | 121-5174 | 1 | Cap-Fuel, Diesel |
| 1:6 | 114-0284 | 1 | Grommet |
| 1:7 | 119-3547 | 1 | Valve-Vent, Fuel |
| 1:8 | 3256-1 | 1 | Washer-Flat |
| 1:9 | 321-2 | 1 | Screw-HH |
| 1:10 | 46-6560 | 1 | Bushing |
| 1:11 | 104-5228 | 1 | Fitting-Elbow, 90 DEG |
| 2 | 115-9849-03 | 1 | Plate-Mount, Tank |
| 3 | 115-9823 | 1 | Tank-Hydraulic |
| 4 | 115-9837 | 1 | Cover-Tank |
| 5 | 115-9793 | 1 | Breather |
| 6 | 115-9825 | 4 | Spacer-Tube, Long |
| 7 | 322-29 | 4 | Screw-HH |
| 8 | 83-1470 | 4 | Washer-Neoprene |
| 9 | 3256-71 | 4 | Washer-Flat |

| Ref. | Part Number | Qty. | Description |
|---|---|---|---|
| 10 | 110-3998 | 1 | Hose-Overflow |
| 11 | 2412-141 | 2 | Clamp-Drive, Worm |
| 12 | 240-11 | 8 | Bushing-Flange |
| 13 | 63-8410 | 8 | Washer |
| 14 | 323-6 | 8 | Screw-HH |
| 20 | 107069 | 2 | Clip |
| 21 | 99-6810 | 4 | Screw-HHF |
| 22 | 105-0204 | 1 | Strainer Fitting ASM |
| 22:1 | 237-146 | 1 | O-Ring |
| 23 | 353-988 | 1 | Plug-Hex |
| 23:1 | 237-79 | 1 | O-Ring |
| 24 | 340-98 | 1 | Fitting-Elbow, 90 DEG |
| 24:1 | 237-79 | 1 | O-Ring |
| 24:2 | 237-30 | 1 | O-Ring |
| 26 | 340-89 | 1 | Fitting-HYD, 45 DEG |
| 26:1 | 237-30 | 1 | O-Ring |
| 26:2 | 237-80 | 1 | O-Ring |
| 27 | 353-551 | 1 | Plug-HH |
| 27:1 | 237-80 | 1 | O-Ring |

● Not serviced separately

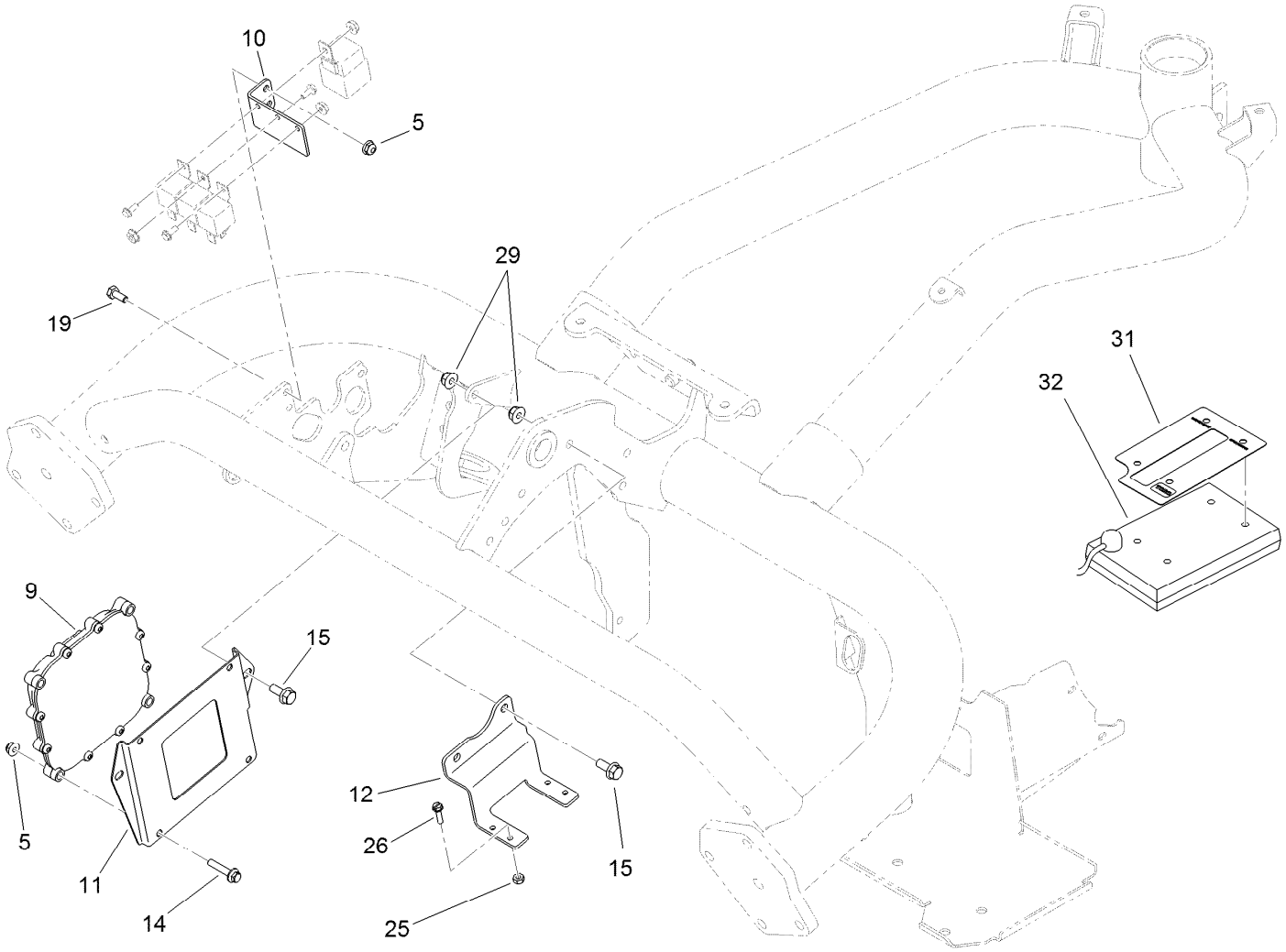


# Controller Assembly

| Ref. | Part Number | Qty. | Description |
|---|---|---|---|
| 5 | 104-7201 | 6 | Nut-HF, NI |
| 9 | 115-1900 | 1 | Controller |
| 10 | 119-2097-01 | 1 | Bracket-Relay |
| 11 | 119-2099-01 | 1 | Plate-Mounting, Controller |
| 12 | 119-2119-01 | 1 | Bracket-Block, Fuse |
| 14 | 3234-21 | 4 | Screw-HHF |
| 15 | 3234-47 | 4 | Screw-HHF |
| 19 | 321-3 | 2 | Screw-HH |
| 25 | 3296-2 | 4 | Nut-Lock, NI |
| 26 | 32105-13 | 4 | Screw-HWH |
| 29 | 104-8300 | 4 | Nut-HF, NI |
| 31 | 115-8227 | 1 | Decal-Controller |
| 32 | 85-4750 | 1 | Box-Display, Diagnostic |

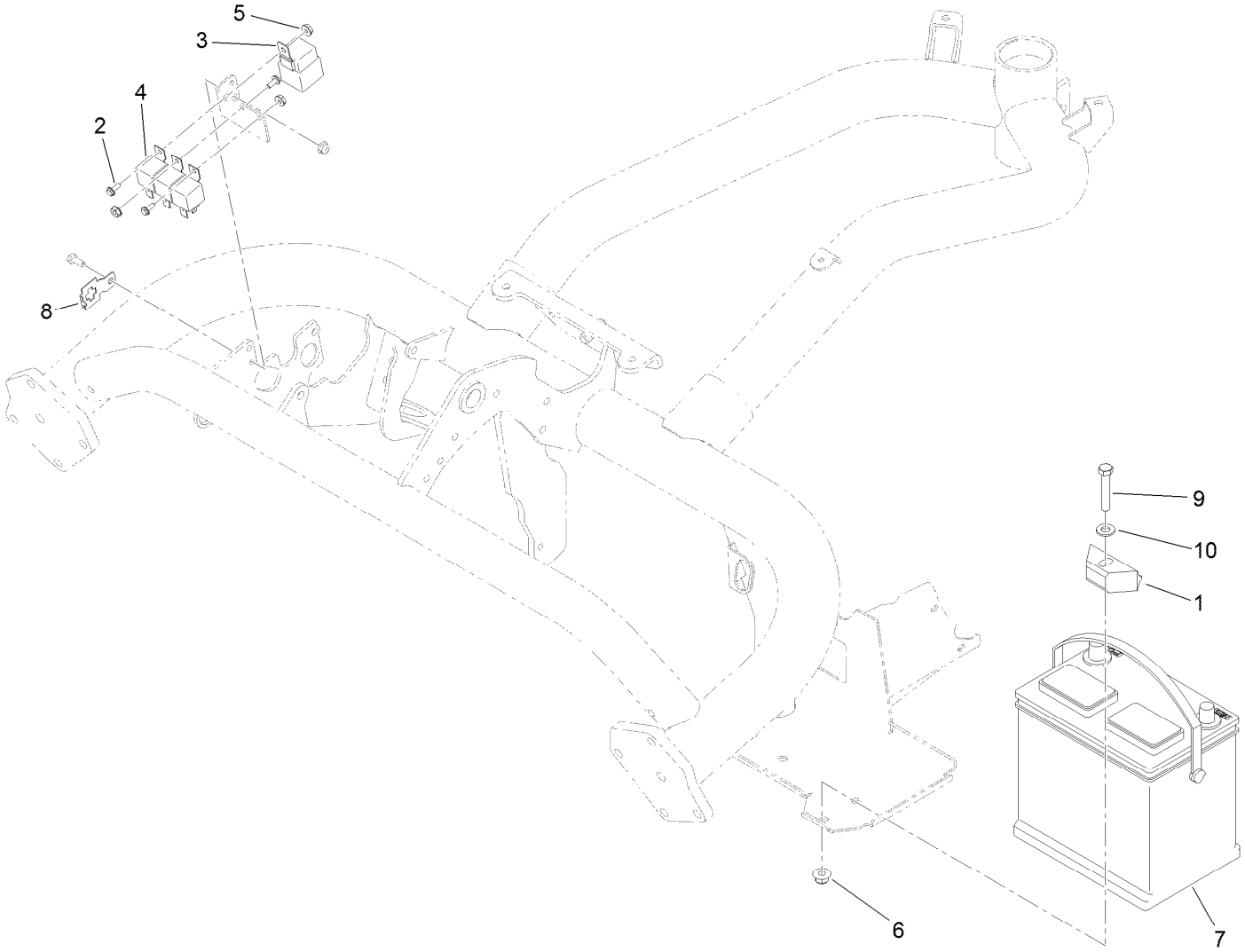


# Battery Assembly

| Ref. | Part Number | Qty. | Description |
|---|---|---|---|
| 1 | 66-2490 | 1 | Retainer-Battery |
| 2 | 112-6349 | 3 | Screw-HWH |
| 3 | 99-7430 | 1 | Relay-Mini |
| 4 | 99-7435 | 3 | Relay |
| 5 | 32149-8 | 3 | Nut-Keps |
| 6 | 104-8301 | 1 | Nut-HF, NI |
| 7 | 104-9979 | 1 | Battery |
| 8 | 114-5502 | 1 | Clip-Fuse |
| 9 | 323-10 | 1 | Screw-HH |
| 10 | 3256-24 | 1 | Washer-Flat |

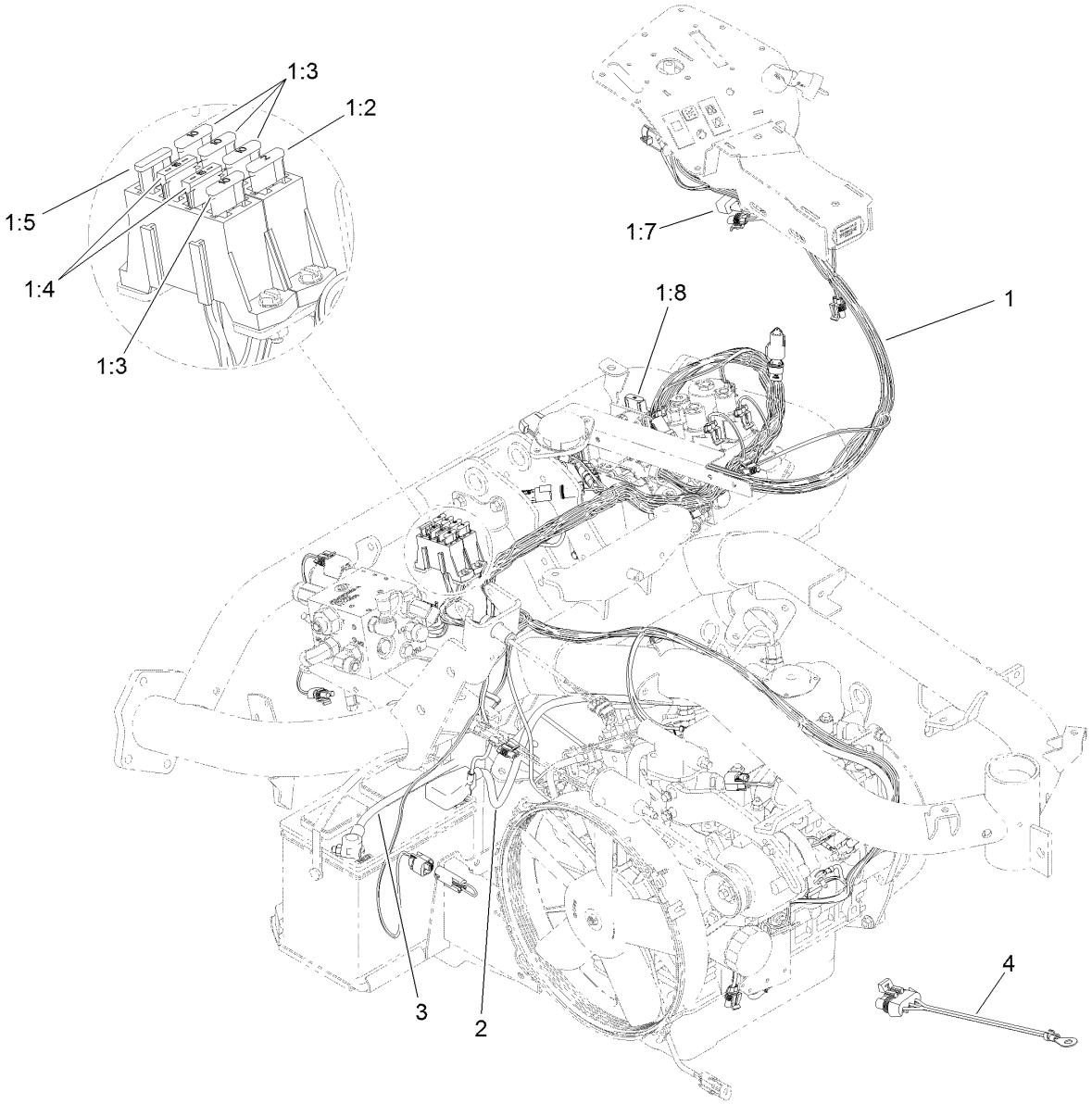


# Wire Harness Assembly

| Ref. | Part Number | Qty. | Description |
|---|---|---|---|
| 1 | 120-3992 | 1 | Harness-Wire |
| 1:2 | 94-6710 | 1 | Fuse-2 Amp |
| 1:3 | 218-578 | 4 | Fuse-Blade, 10 Amp |
| 1:4 | 109355 | 2 | Fuse-Blade, 15 Amp |
| 1:5 | 114241 | 1 | Fuse-Blade, 7.5 Amp |
| 1:6 | 100-4918 | 1 | Diode ● |
| 1:7 | 104-4022 | 1 | Resistor-75 Ohm |
| 1:8 | 94-8002 | 1 | Fuse-Blade, 50 Amp |
| 2 | 114-9747 | 1 | Cable-Battery, Positive |
| 3 | 115-8135 | 1 | Cable-Battery, Negative |
| 4 | 99-3441 | 1 | Harness-Wire, Fusible Link |

● Not illustrated

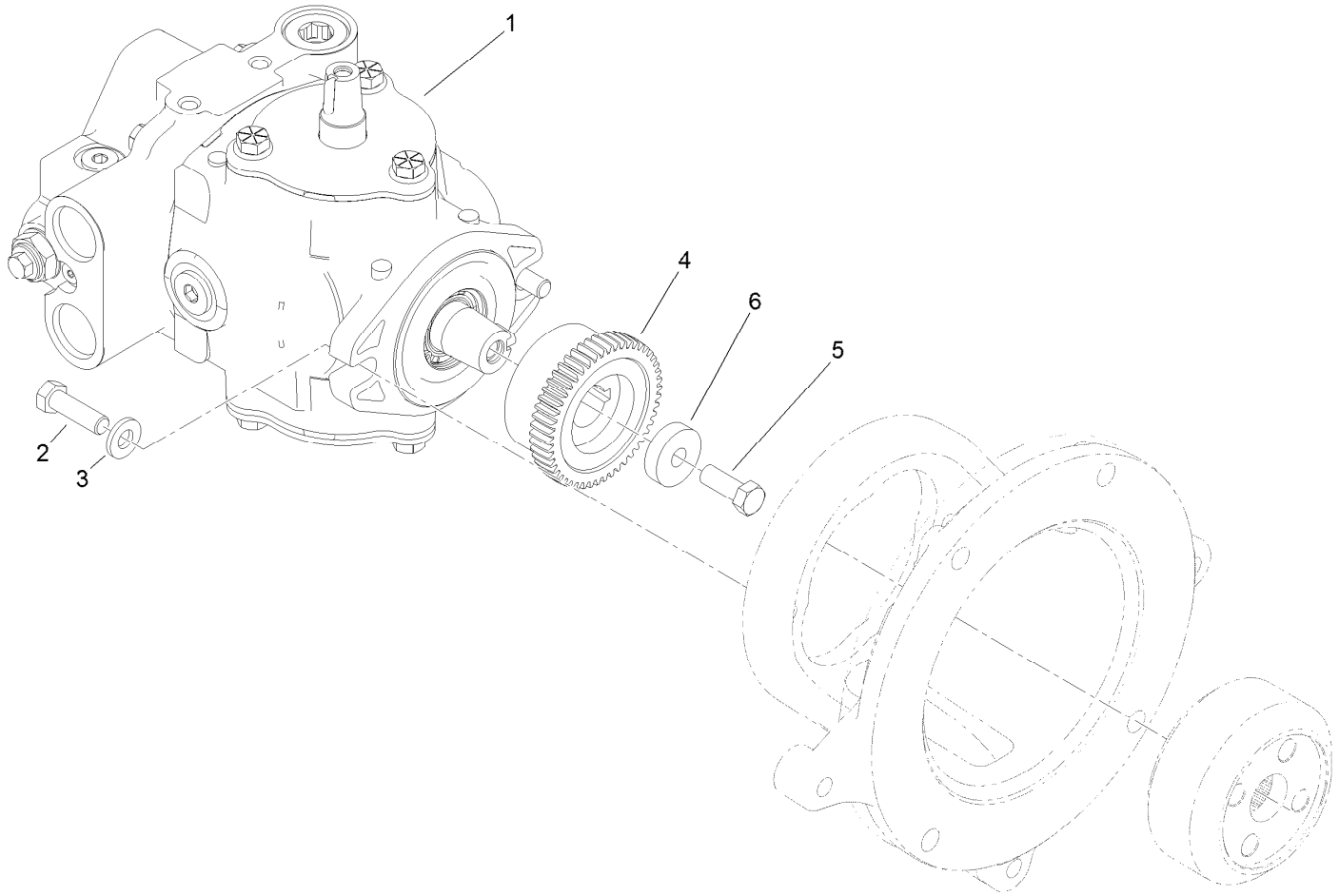


# Pump Coupling Assembly

| *Ref.* | *Part Number* | *Qty.* | *Description* |
|---|---|---|---|
| 1 | 121-9558 | 1 | HYD Pump ASM |
| 2 | 323-7 | 2 | Screw-HH |
| 3 | 100-4852 | 2 | Washer-Hardened |
| 4 | 119-4418 | 1 | Coupling |
| 5 | 3211-4 | 1 | Screw-HH |
| 6 | 117-3657 | 1 | Spacer |

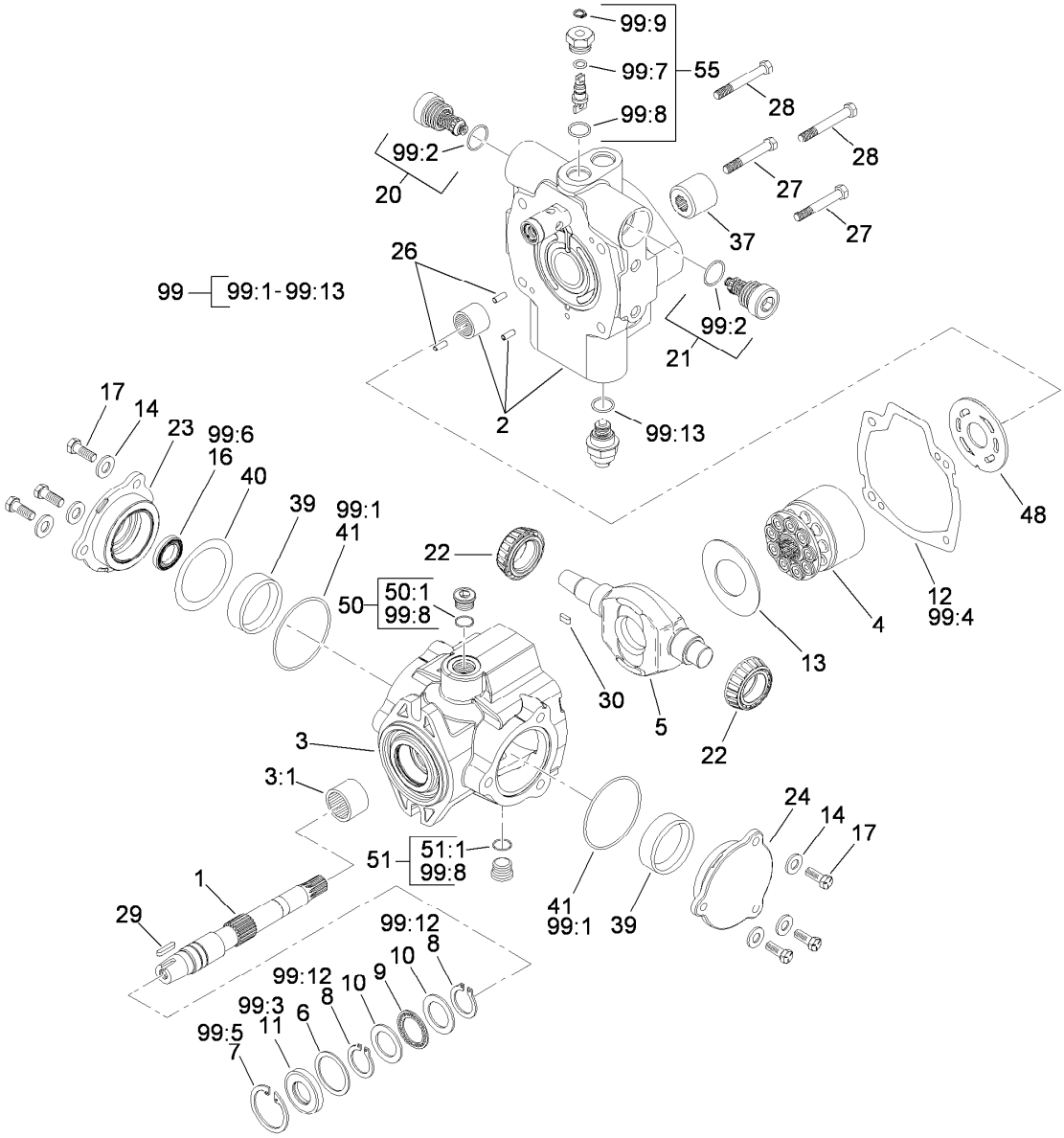


# Hydraulic Pump Assembly No. 121-9558

| Ref. | Part Number | Qty. | Description |
|---|---|---|---|
| 1 | 119-7148 | 1 | Shaft-Drive, Tapered |
| 2 | 121-9574 | 1 | Endcover ASM |
| 3 | 100-3176 | 1 | Housing ASM |
| 3:1 | 94-6363 | 1 | Bearing |
| 4 | 76-6070 | 1 | Rotating Kit |
| 5 | 104-4888 | 1 | Swashplate |
| 6 | 33-3720 | 1 | Washer |
| 7 | 32151-13 | 1 | Ring-Retaining |
| 8 | 32151-29 | 2 | Ring-Retaining |
| 9 | 252-66 | 1 | Bearing-Thrust |
| 10 | 252-71 | 2 | Washer-Thrust |
| 11 | 104-4861 | 1 | Seal-Shaft |
| 12 | 33-4930 | 1 | Gasket-Housing |
| 13 | 98-4635 | 1 | Insert-Plate, Cam |
| 14 | 105-9762 | 6 | Washer |
| 16 | 76-6190 | 1 | Seal-Shaft |
| 17 | 98-4640 | 6 | Screw-Cap |
| 20 | 120-1989 | 1 | Relief Valve ASM |

| Ref. | Part Number | Qty. | Description |
|---|---|---|---|
| 21 | 120-1989 | 1 | Relief Valve ASM |
| 22 | 98-4639 | 2 | Bearing-Cone |
| 23 | 98-4645 | 1 | Plate-Cover |
| 24 | 98-4644 | 1 | Plate-Cover |
| 26 | 76-6150 | 2 | Pin-Dowel |
| 27 | 76-6160 | 2 | Capscrew |
| 28 | 76-6170 | 2 | Capscrew |
| 29 | 120-5751 | 1 | Key |
| 30 | 94-3646 | 1 | Key |
| 37 | 74-9040 | 1 | Coupler |
| 39 | 104-4046 | 2 | Bearing-Cup |
| 40 | 100-3182 | 1 | Shim Kit |
| 41 | 100-3179 | 2 | O-Ring |
| 48 | 100-3180 | 1 | Plate-Valve |
| 50 | 74-9280 | 1 | Plug ASM |
| 50:1 | | 1 | O-Ring ■ |
| 51 | 74-9280 | 1 | Plug ASM |
| 51:1 | | 1 | O-Ring ■ |

● Not illustrated

■ Not serviced separately

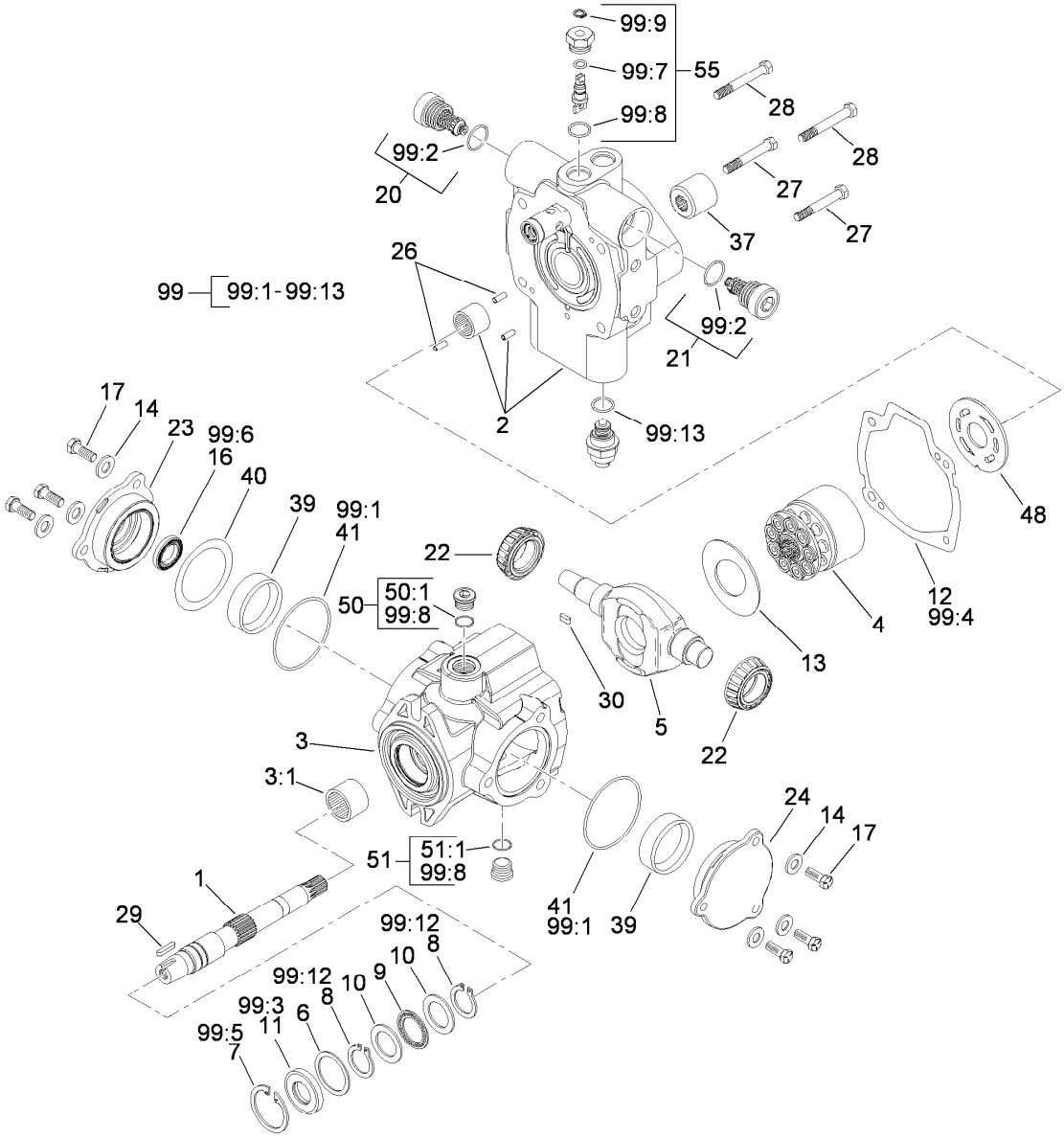


# Hydraulic Pump Assembly No. 121-9558 (continued)

| Ref. | Part Number | Qty. | Description |
|---|---|---|---|
| 55 | 105-3811 | 1 | Valve-Bypass |
| 99 | 120-5754 | 1 | Seal Kit |
| 99:1 | | 2 | O-Ring ■ |
| 99:2 | | 2 | O-Ring ■ |
| 99:3 | | 1 | Seal-Shaft ■ |
| 99:4 | | 1 | Gasket ■ |
| 99:5 | | 1 | Ring-Retaining ■ |
| 99:6 | | 1 | Seal-Shaft ■ |
| 99:7 | | 1 | O-Ring ■ |
| 99:8 | | 5 | O-Ring ■ |
| 99:9 | | 1 | Ring-Retaining ■ |
| 99:10 | | 1 | O-Ring (Not Used For This Configuration) ● ■ |
| 99:11 | | 1 | O Ring-Molded (Not Used For This Configuration) ● ■ |
| 99:12 | | 2 | Ring-Retaining ■ |
| 99:13 | | 1 | O-Ring ■ |

● Not illustrated

■ Not serviced separately

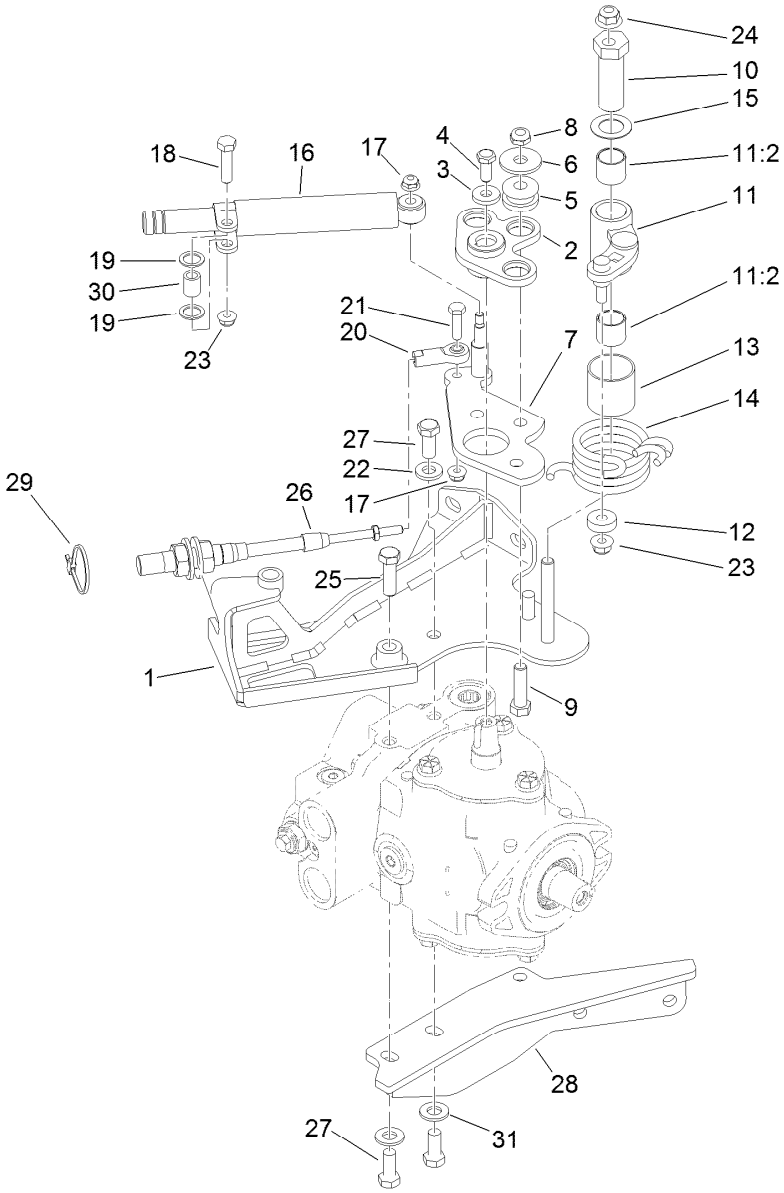


# Neutral Centering Assembly

| Ref. | Part Number | Qty. | Description |
|---|---|---|---|
| 1 | 120-2016 | 1 | Support-Cable |
| 2 | 117-4466 | 1 | Plate ASM |
| 3 | 88-7200 | 1 | Washer-Flat |
| 4 | 3235-6 | 1 | Screw-HH |
| 5 | 63-9750 | 3 | Mount |
| 6 | 93-8806 | 3 | Washer-Hardened |
| 7 | 117-9061 | 1 | Lever-Pump |
| 8 | 3296-59 | 3 | Nut-Lock, NI |
| 9 | 323-29 | 3 | Screw-HH |
| 10 | 117-9046 | 1 | Stud-Eccentric |
| 11 | 117-9053 | 1 | Neutral Arm ASM |
| 11:2 | 94-9609 | 2 | Bushing-Straight |
| 12 | 251-259 | 1 | Bearing-Ball |
| 13 | 115-8158 | 1 | Spacer-Spring |
| 14 | 117-9047 | 1 | Spring-Torsion |
| 15 | 119-8199 | 1 | Washer-Nylon |

| Ref. | Part Number | Qty. | Description |
|---|---|---|---|
| 16 | 76-8870 | 1 | Damper-Lever |
| 17 | 104-7201 | 2 | Nut-HF, NI |
| 18 | 322-6 | 1 | Screw-HH |
| 19 | 94-8196 | 2 | Washer-Nylon |
| 20 | 2411-41 | 1 | Rod End-Ball Joint |
| 21 | 321-6 | 1 | Screw-HH |
| 22 | 100-4852 | 1 | Washer-Hardened |
| 23 | 104-8300 | 2 | Nut-HF, NI |
| 24 | 104-8301 | 1 | Nut-HF, NI |
| 25 | 323-7 | 1 | Screw-HH |
| 26 | 119-1734 | 1 | Cable-Control, Traction |
| 27 | 323-5 | 3 | Screw-HH |
| 28 | 119-4474 | 1 | Bracket-Muffler |
| 29 | 3290-379 | 1 | Tie-Cable |
| 30 | 94-8197 | 1 | Tube-Pivot |
| 31 | 100-4852 | 2 | Washer-Hardened |

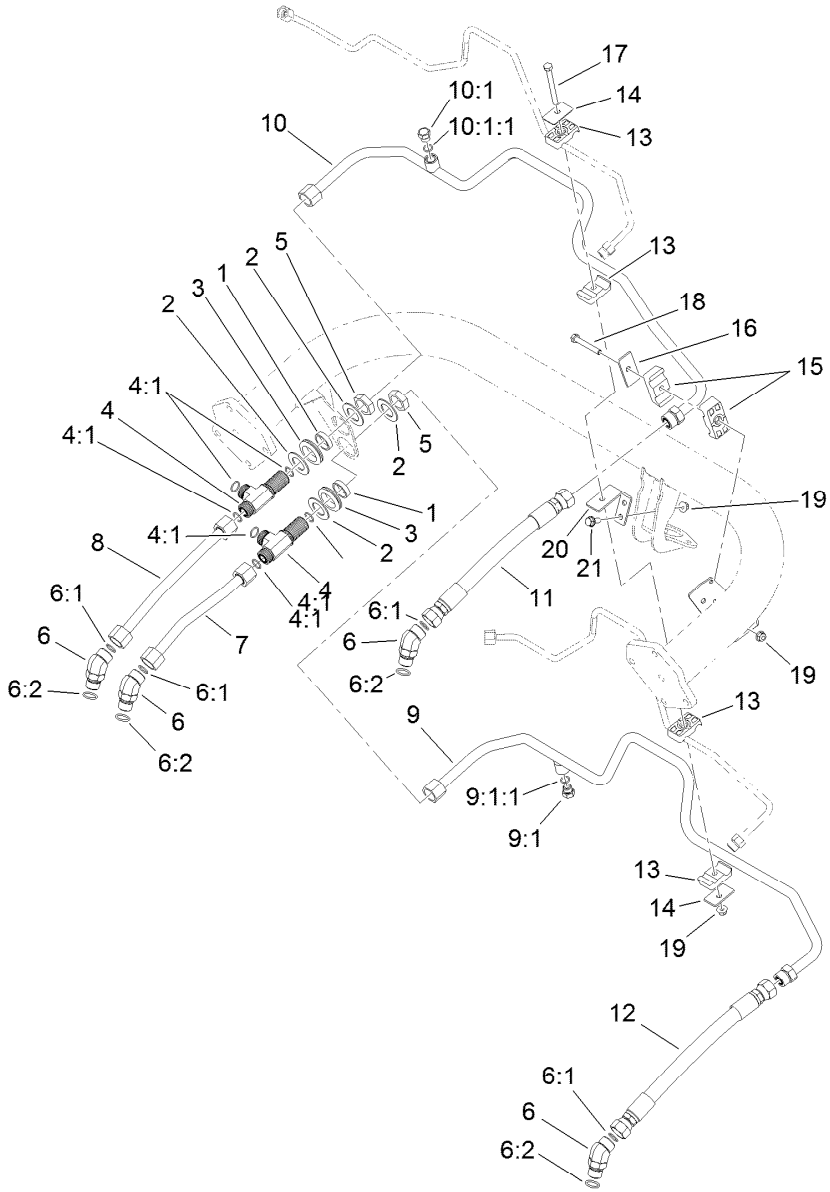


# Traction Drive Hydraulic Line Assembly

| Ref. | Part Number | Qty. | Description |
|---|---|---|---|
| 1 | 69-9000 | 2 | Spacer |
| 2 | 69-9010 | 4 | Washer |
| 3 | 240-3 | 2 | Grommet-Rubber |
| 4 | 94-5350 | 2 | Fitting-Tee |
| 4:1 | 237-65 | 3 | O-Ring |
| 5 | 340-74 | 2 | Nut-Lock, Bulkhead |
| 6 | 340-14 | 4 | Fitting-HYD, 45 DEG |
| 6:1 | 237-65 | 1 | O-Ring |
| 6:2 | 237-80 | 1 | O-Ring |
| 7 | 119-2057 | 1 | Tube-HYD |
| 8 | 119-2058 | 1 | Tube-HYD |
| 9 | 119-2063 | 1 | Tube-HYD |
| 9:1 | 353-508 | 1 | Plug-HH |
| 9:1:1 | 237-42 | 1 | O-Ring |

| Ref. | Part Number | Qty. | Description |
|---|---|---|---|
| 10 | 119-2064 | 1 | HYD Tube ASM |
| 10:1 | 353-508 | 1 | Plug-HH |
| 10:1:1 | 237-42 | 1 | O-Ring |
| 11 | 115-9484 | 1 | Hose-HYD |
| 12 | 115-9485 | 1 | Hose-HYD |
| 13 | 56-7970 | 4 | Clamp-Tube |
| 14 | 69-9760 | 2 | Plate-Cover |
| 15 | 119-8173 | 2 | Clamp-Tube |
| 16 | 69-9761 | 1 | Plate-Cover |
| 17 | 322-20 | 1 | Screw-HH |
| 18 | 322-12 | 1 | Screw-HH |
| 19 | 104-8300 | 4 | Nut-HF, NI |
| 20 | 119-2092 | 1 | Bracket-Tube |
| 21 | 3234-47 | 2 | Screw-HHF |

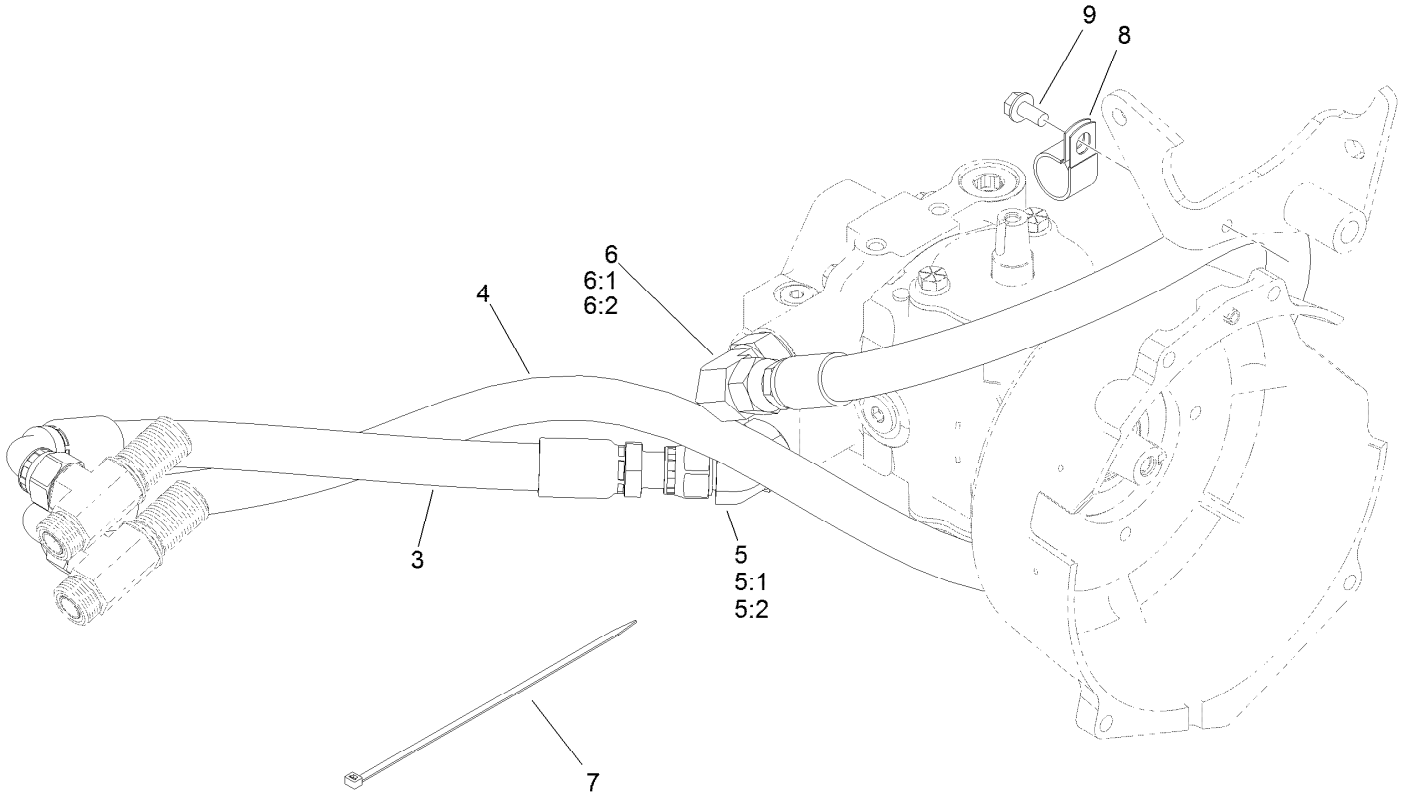


# Traction Drive Hose Routing Assembly

| Ref. | Part Number | Qty. | Description |
|---|---|---|---|
| 3 | 125-5169 | 1 | Hose-HYD |
| 4 | 120-1967 | 1 | Hose-HYD |
| 5 | 340-156 | 1 | Fitting-Elbow 45 |
| 5:1 | 237-65 | 1 | O-Ring |
| 5:2 | 237-81 | 1 | O-Ring |
| 6 | 340-139 | 1 | Fitting-Elbow 90 |
| 6:1 | 237-81 | 1 | O-Ring |
| 6:2 | 237-65 | 1 | O-Ring |
| 7 | 3290-378 | 1 | Tie-Cable |
| 8 | 2412-39 | 1 | Clamp-R |
| 9 | 32144-14 | 1 | Screw-HWHTF |

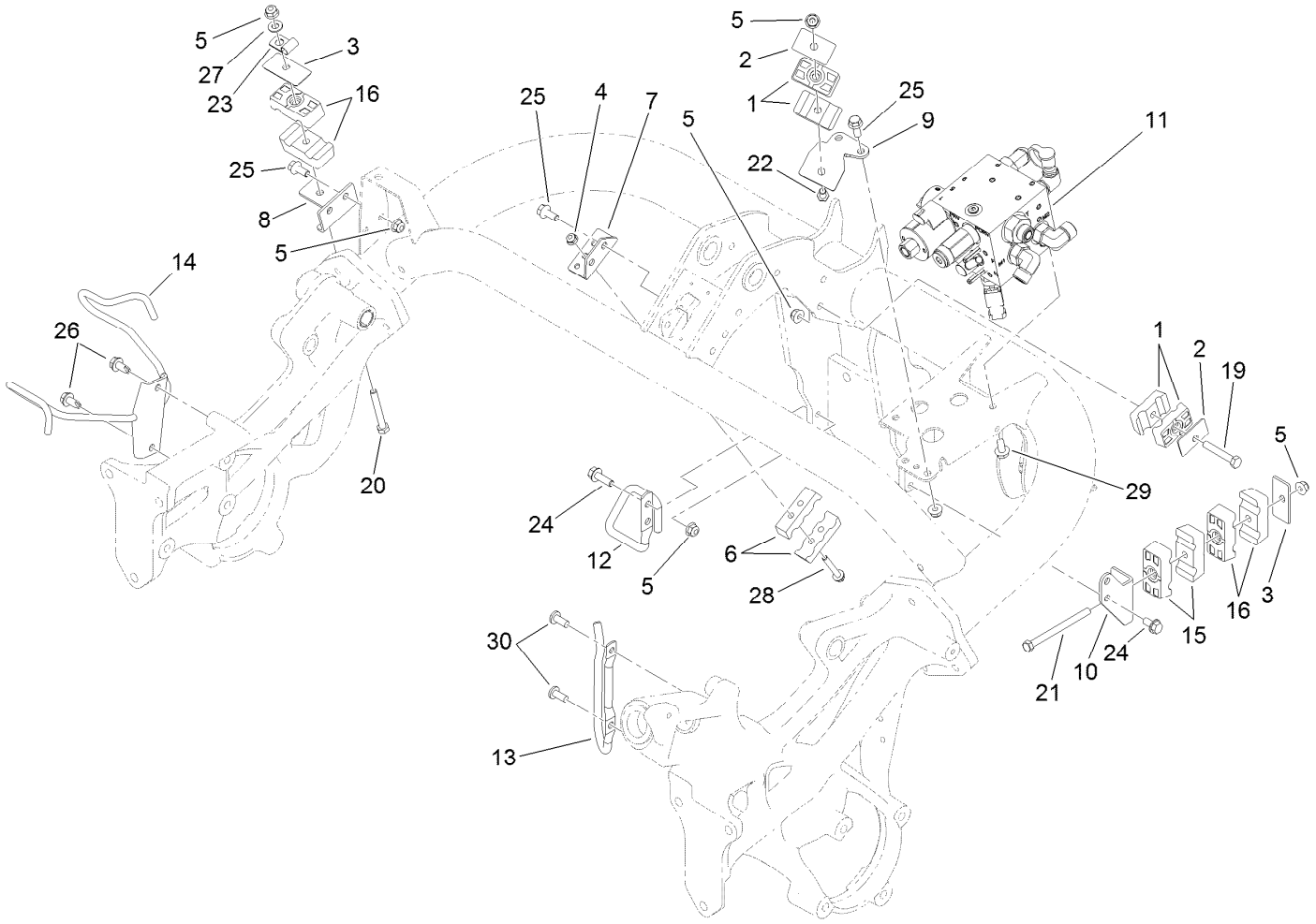


# Hydraulic Mow Assembly

| Ref. | Part Number | Qty. | Description |
|---|---|---|---|
| 1 | 56-7972 | 4 | Clamp-Tube |
| 2 | 69-9760 | 2 | Plate-Cover |
| 3 | 69-9761 | 2 | Plate-Cover |
| 4 | 104-7201 | 2 | Nut-HF, NI |
| 5 | 104-8300 | 14 | Nut-HF, NI |
| 6 | 119-2082 | 2 | Clamp-Tube |
| 7 | 119-2091 | 1 | Bracket-Tube |
| 8 | 119-2095 | 1 | Bracket-Tube |
| 9 | 119-2106 | 1 | Bracket-Clamp |
| 10 | 119-4493 | 1 | Bracket-Support, Tube |
| 11 | | 1 | Mow Manifold ASM ● |
| 12 | 121-6671 | 1 | Wireform Hose Support |
| 13 | 121-6667 | 1 | Wireform-Hose, HYD |
| 14 | 119-8109-03 | 1 | Bracket-Hose |
| 15 | 119-8156 | 2 | Clamp-Tube |
| 16 | 119-8168 | 4 | Clamp-Tube |
| 19 | 322-10 | 1 | Screw-HH |
| 20 | 322-12 | 1 | Screw-HH |
| 21 | 322-19 | 1 | Screw-HH |
| 22 | 322-21 | 1 | Screw-HH |
| 23 | 2412-113 | 1 | Clamp-R |
| 24 | 3234-29 | 4 | Screw-HHF |
| 25 | 3234-47 | 6 | Screw-HHF |
| 26 | 32104-32 | 2 | Screw-HWH |
| 27 | 3256-23 | 1 | Washer-Plain |
| 28 | 32105-18 | 2 | Screw-HHF |
| 29 | 3234-7 | 2 | Screw-HHF |
| 30 | 32122-14 | 2 | Screw-PPH |

● Not serviced separately

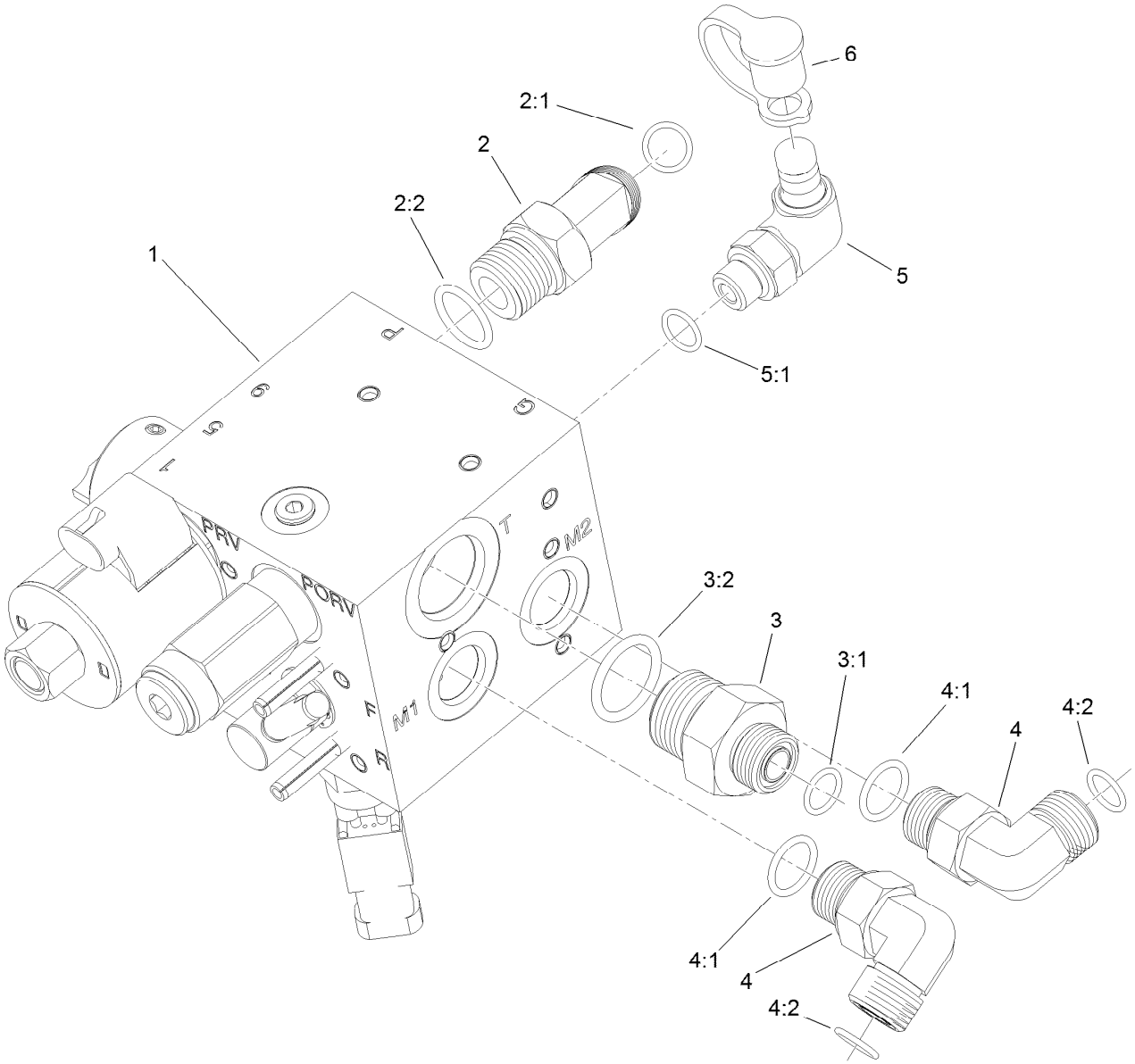


# Hydraulic Mow Manifold Assembly

| Ref. | Part Number | Qty. | Description |
|---|---|---|---|
| 1 | 117-9858 | 1 | Manfold-HYD, Mow (Backlap) |
| 2 | 340-89 | 1 | Fitting-HYD, 45 DEG |
| 2:1 | 237-30 | 1 | O-Ring |
| 2:2 | 237-80 | 1 | O-Ring |
| 3 | 100-4240 | 1 | Fitting-STR |
| 3:1 | 237-30 | 1 | O-Ring |
| 3:2 | 237-81 | 1 | O-Ring |
| 4 | 340-98 | 2 | Fitting-Elbow, 90 DEG |
| 4:1 | 237-79 | 1 | O-Ring |
| 4:2 | 237-30 | 1 | O-Ring |
| 5 | 115-9147 | 1 | Fitting-Elbow, 90 DEG |
| 5:1 | 237-78 | 1 | O-Ring |
| 6 | 354-79 | 1 | Cap-Dust |

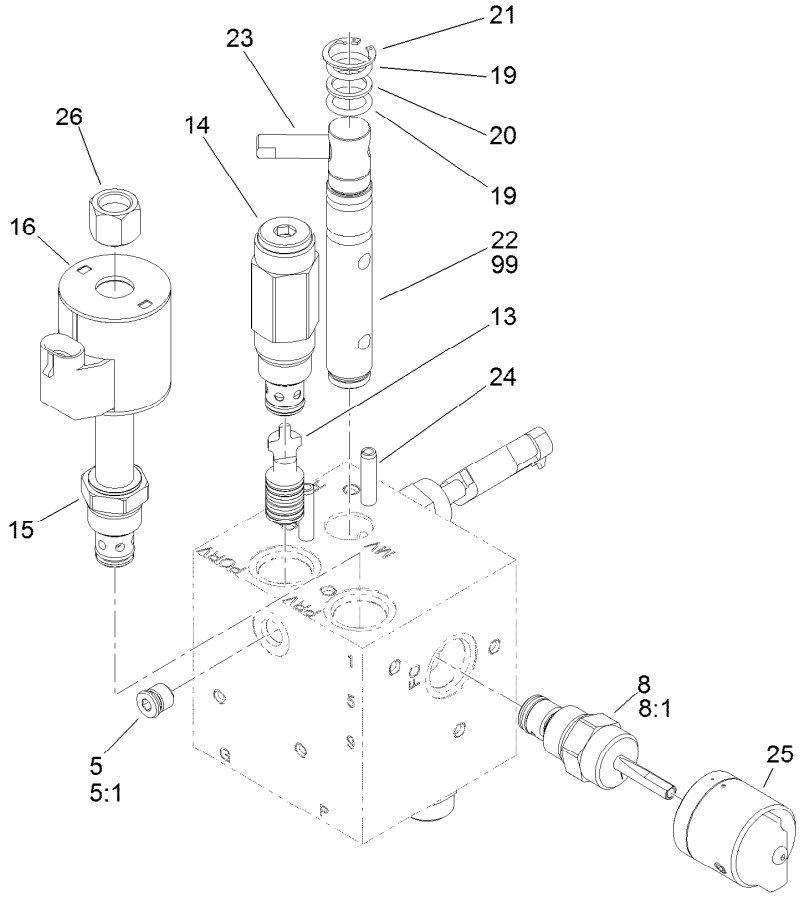


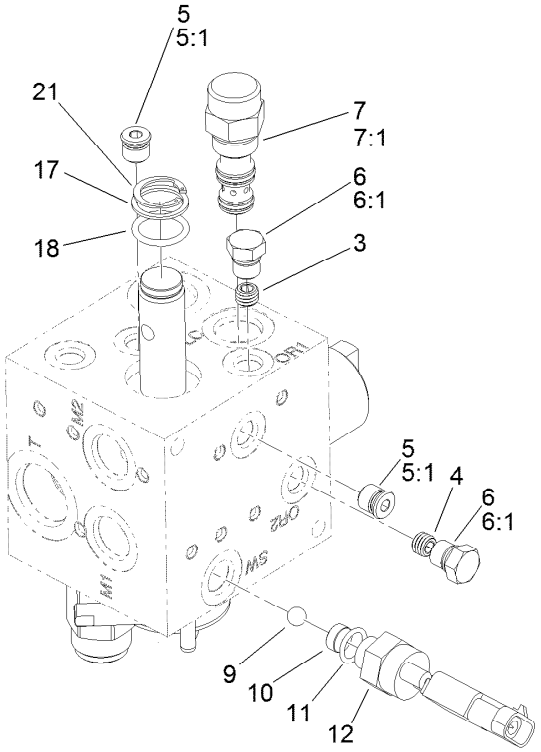


# Hydraulic Mow Manifold Assembly No. 117-9858

| Ref. | Part Number | Qty. | Description |
|---|---|---|---|
| 3 | 120-5761 | 1 | Orifice (.020) |
| 4 | 112-9202 | 1 | Orifice-Flow, Control (.060) |
| 5 | 106-1025 | 3 | Plug-HYD |
| 5:1 | 237-78 | 1 | O-Ring |
| 6 | 117-0115 | 2 | Plug |
| 6:1 | 237-78 | 1 | O-Ring |
| 7 | 120-5762 | 1 | Element-Logic |
| 7:1 | 110-8773 | 1 | Seal Kit |
| 8 | 110-8769 | 1 | Valve-Control, Manual Flow |
| 8:1 | 110-2633 | 1 | Seal Kit ● |
| 9 | 117-4605 | 1 | Ball-SS |
| 10 | 119-7145 | 1 | Shim-SS |
| 11 | 110-8757 | 1 | O-Ring |
| 12 | 72-4320 | 1 | Switch-Ball |
| 13 | 119-7146 | 1 | Piston-Pilot (With Seals) |

| Ref. | Part Number | Qty. | Description |
|---|---|---|---|
| 14 | 119-7147 | 1 | Valve-Relief |
| 15 | 110-8799 | 1 | Valve-Relief, Proportional |
| 16 | 110-6344 | 1 | Coil-12V, DC |
| 17 | 106-8139 | 1 | Ring-Back Up |
| 18 | 117-4607 | 1 | O-Ring |
| 19 | 117-4606 | 2 | O-Ring |
| 20 | 112-6534 | 1 | Ring-Back Up |
| 21 | 112-6532 | 2 | Ring-Retaining |
| 22 | 119-7141 | 1 | Spool |
| 23 | 110-8758 | 1 | Handle-Spool |
| 24 | 112-6531 | 2 | Pin-Spring |
| 25 | 119-7140 | 1 | Knob |
| 26 | 130-8180 | 1 | Nut-Coil (9/16-24 Unef-2B) |
| 99 | 119-7142 | 1 | Kit-Seal, Spool |

● Not illustrated

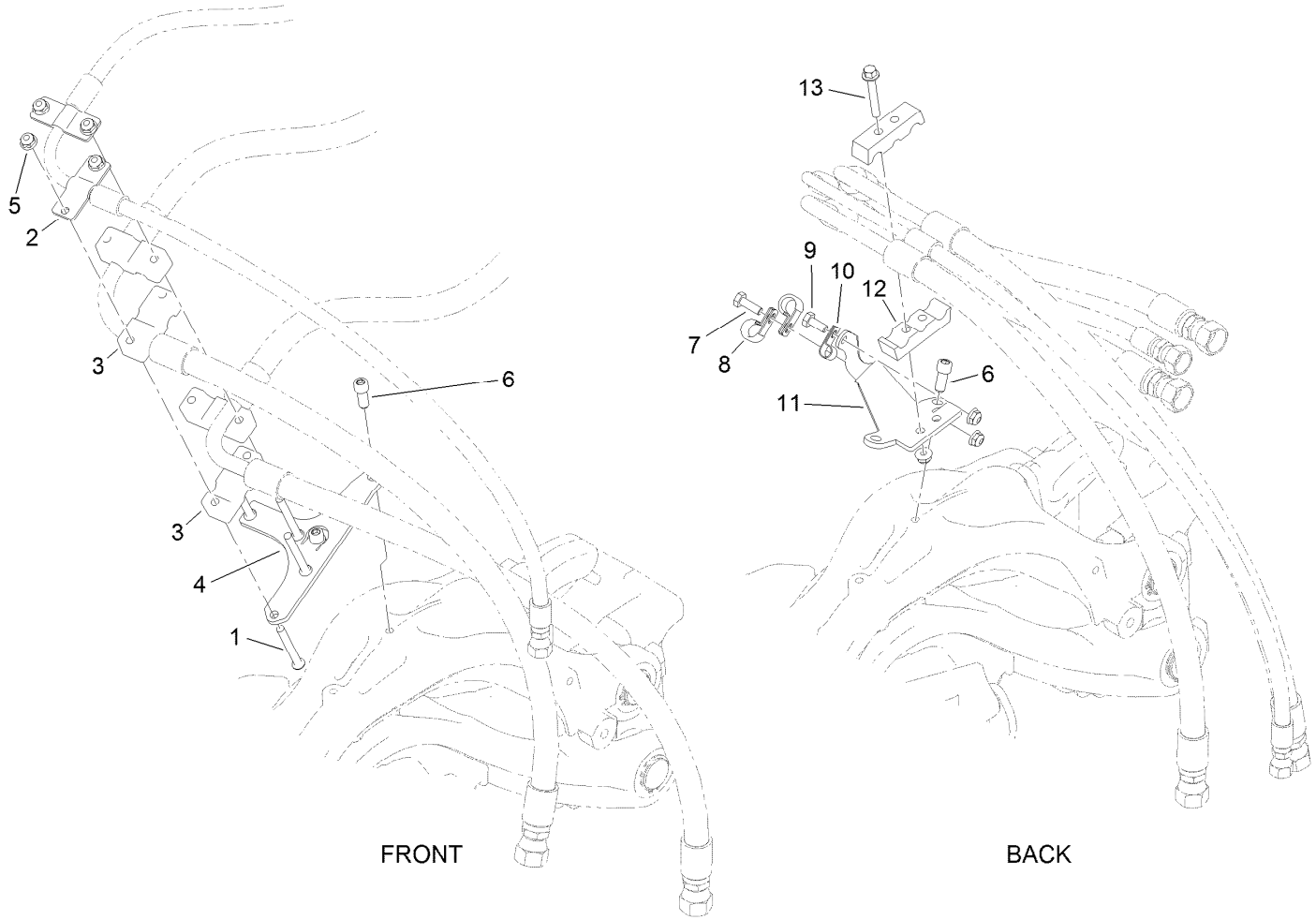


# Hydraulic Mow Clamp Assembly

| Ref. | Part Number | Qty. | Description |
|---|---|---|---|
| 1 | 120-2011 | 8 | Screw-HSBH |
| 2 | 119-8142 | 4 | Strap |
| 3 | 119-8141 | 8 | Clamp-Tube |
| 4 | 119-8143-03 | 2 | Bracket-Clamp, Hose |
| 5 | 104-7201 | 12 | Nut-HF, NI |
| 6 | 100-2401 | 6 | Screw-HSH |
| 7 | 321-4 | 1 | Screw-HH |
| 8 | 2412-73 | 2 | Clamp-R |
| 9 | 321-3 | 1 | Screw-HH |
| 10 | 2412-89 | 1 | Clamp-R |
| 11 | 119-8172-03 | 1 | Bracket-Hose |
| 12 | 119-2082 | 2 | Clamp-Tube |
| 13 | 32105-18 | 2 | Screw-HHF |

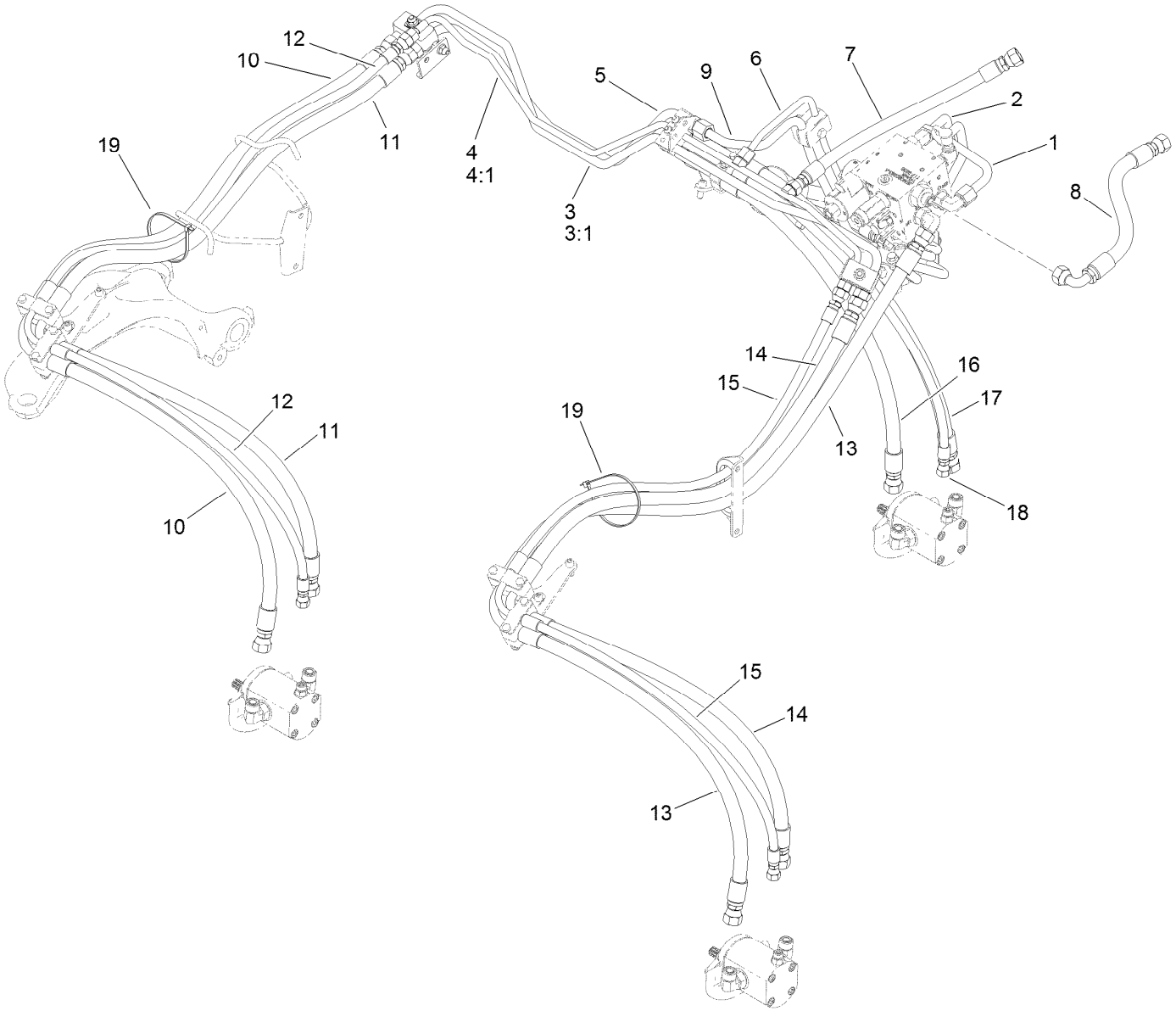


# Hydraulic Mow
# Hose Routing Assembly

| Ref. | Part Number | Qty. | Description |
|---|---|---|---|
| 1 | 117-9347 | 1 | HYD Tube ASM |
| 2 | 119-2073 | 1 | HYD Tube ASM |
| 3 | 119-2078 | 1 | HYD Tube ASM |
| 3:1 | 237-30 | 2 | O-Ring |
| 4 | 119-2079 | 1 | HYD Tube ASM |
| 4:1 | 237-22 | 4 | O-Ring |
| 5 | 119-2084 | 1 | HYD Tube ASM |
| 6 | 119-2085 | 1 | HYD Tube ASM |
| 7 | 119-2089 | 1 | Hose-HYD (Case To Tank) |
| 8 | 119-8106 | 1 | Hose-HYD (Mow Block/Tank) |
| 9 | 119-8122 | 1 | HYD Tube ASM |

| Ref. | Part Number | Qty. | Description |
|---|---|---|---|
| 10 | 119-8145 | 1 | Hose-HYD (Pressure No. 3) |
| 11 | 119-8146 | 1 | Hose-HYD (Return No. 3) |
| 12 | 119-8147 | 1 | Hose-HYD (Case No. 3) |
| 13 | 119-8157 | 1 | Hose-HYD (Pressure No. 2) |
| 14 | 119-8158 | 1 | Hose-HYD (Return No. 2) |
| 15 | 119-8159 | 1 | HYD Hose ASM (Case No. 2) |
| 16 | 119-8160 | 1 | Hose-HYD (Pressure No. 1) |
| 17 | 119-8161 | 1 | Hose-HYD (Return No. 1) |
| 18 | 119-8162 | 1 | Hose-HYD (Case No. 1) |
| 19 | 3290-379 | 2 | Tie-Cable |

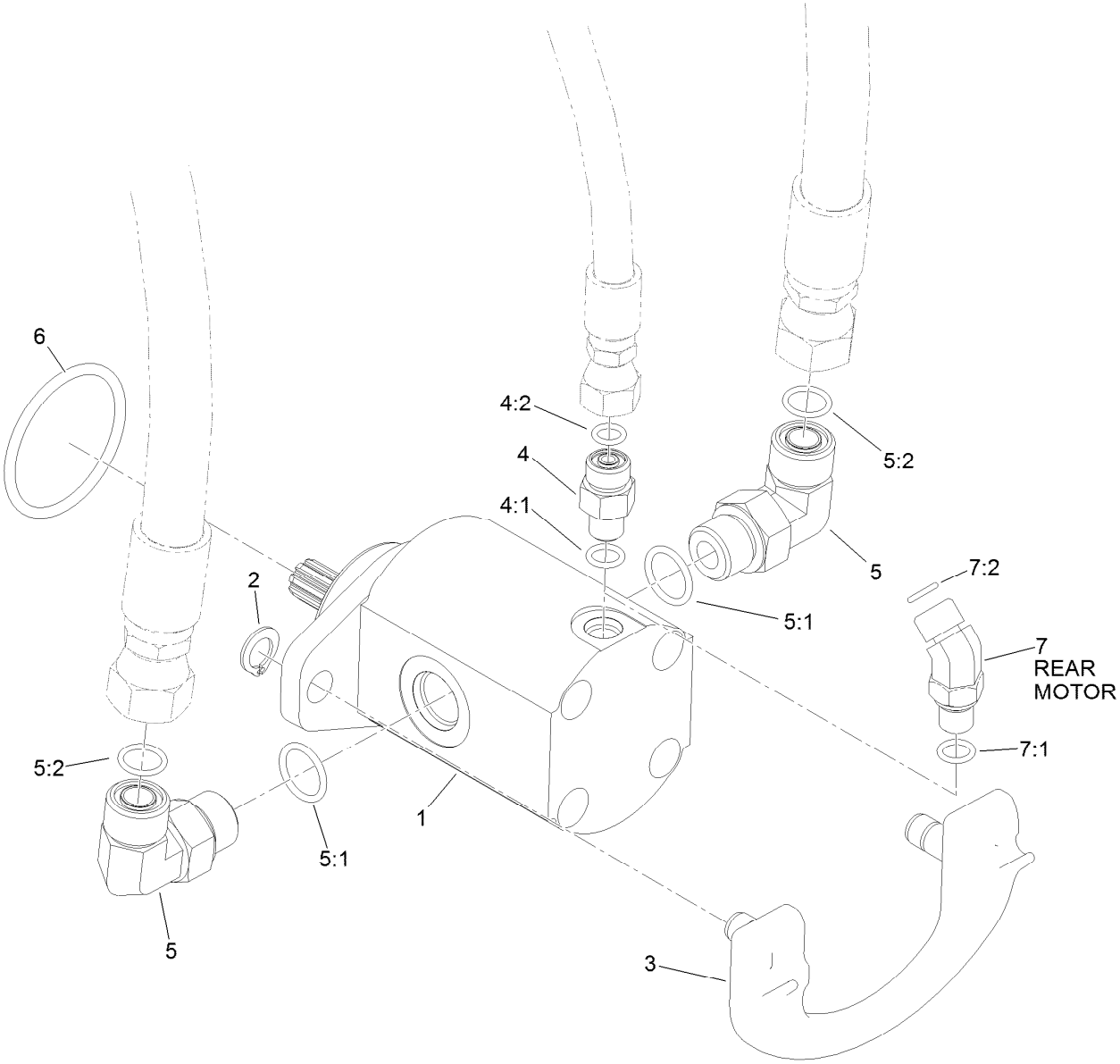


# Hydraulic Mow Reel Motor Assembly

| *Ref.* | *Part Number* | *Qty.* | *Description* |
|---|---|---|---|
| 1 | 115-3321 | 3 | HYD Reel Motor ASM |
| 2 | 115-5206 | 6 | Ring-Retaining |
| 3 | 115-5389 | 3 | Cam-Mount, Motor |
| 4 | 340-92 | 2 | Fitting-Straight |
| 4:1 | 237-78 | 1 | O-Ring |
| 4:2 | 237-21 | 1 | O-Ring |
| 5 | 340-98 | 6 | Fitting-Elbow, 90 DEG |
| 5:1 | 237-79 | 1 | O-Ring |
| 5:2 | 237-30 | 1 | O-Ring |
| 6 | 115-3298 | 3 | O-Ring |
| 7 | 340-103 | 1 | Fitting-HYD, 45 DEG |
| 7:1 | 237-78 | 1 | O-Ring |
| 7:2 | 237-21 | 1 | O-Ring |

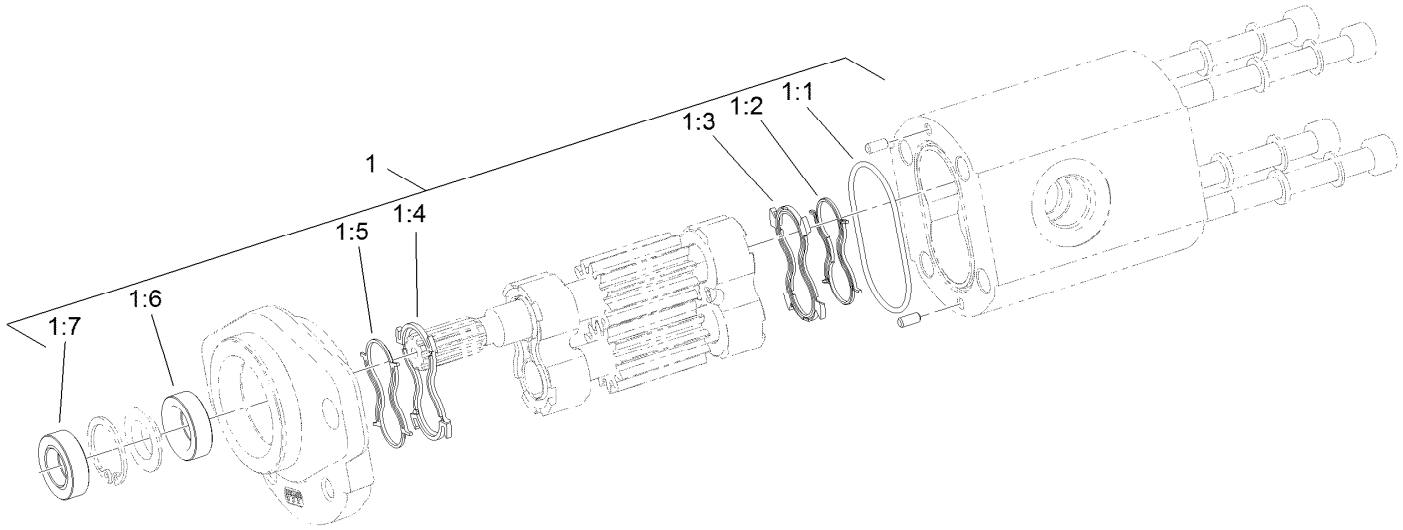


# Hydraulic Reel Motor Assembly No. 115-3321

| *Ref.* | *Part Number* | *Qty.* | *Description* |
|---|---|---|---|
| 1 | 119-7113 | 1 | Seal Kit |
| 1:1 | | 1 | O-Ring Housing ● |
| 1:2 | | 1 | Seal-Anti Extrusion ● |
| 1:3 | | 1 | Seal-Plate, Balancing ● |
| 1:4 | | 1 | Seal-Plate, Balancing ● |
| 1:5 | | 1 | Seal- Anti Extrusion ● |
| 1:6 | | 1 | Seal-Shaft (Inboard) ● |
| 1:7 | | 1 | Seal-Shaft (Outboard) ● |

● Not serviced separately

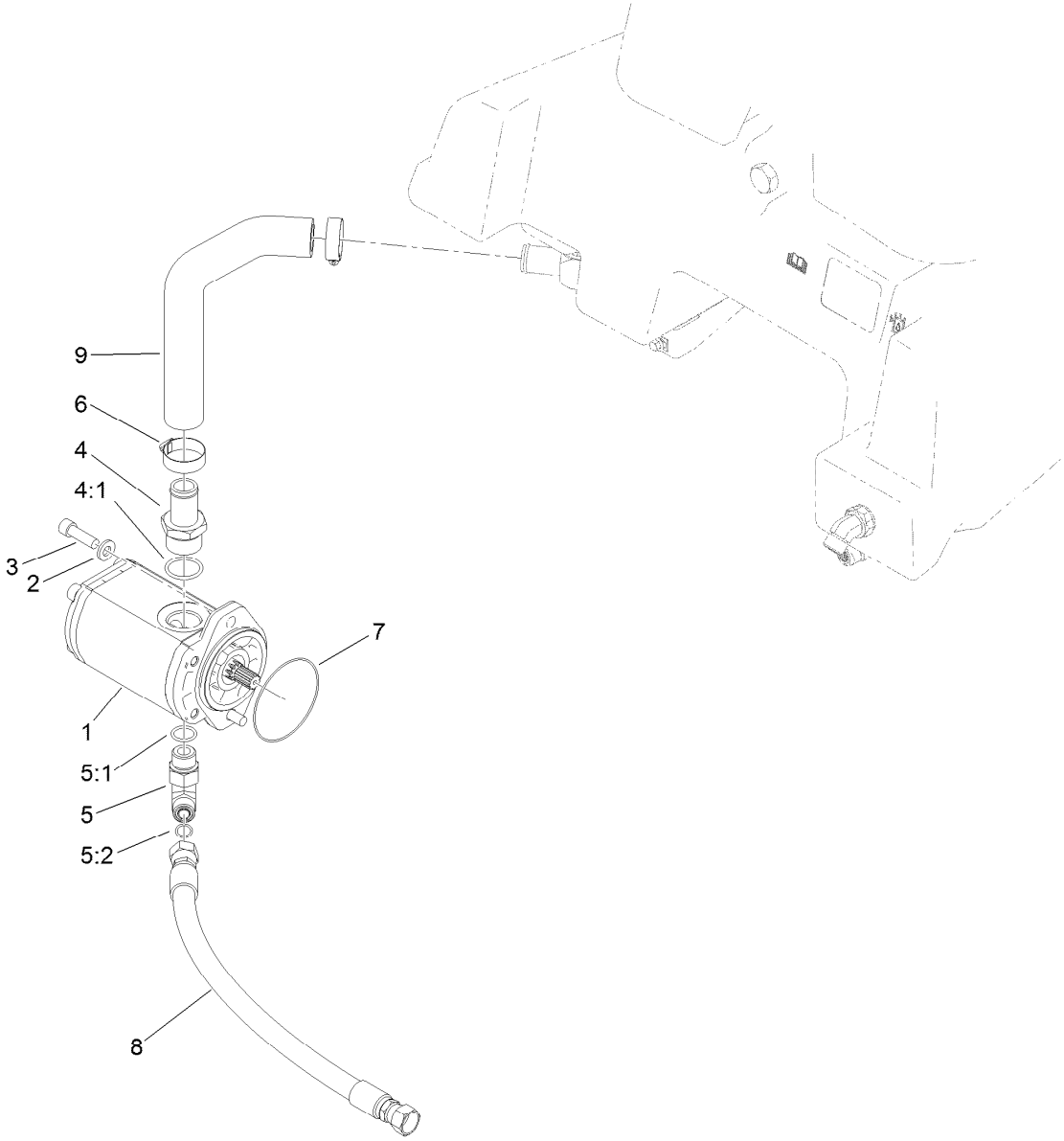


# Hydraulic Mow
# Gear Pump Assembly

| *Ref.* | *Part Number* | *Qty.* | *Description* |
|---|---|---|---|
| 1 | 114-9956 | 1 | HYD Gear Pump ASM |
| 2 | 100-4852 | 2 | Washer-Hardened |
| 3 | 3274-1 | 2 | Screw-HSH |
| 4 | 354-78 | 1 | Fitting-STR |
| 4:1 | 237-146 | 1 | O-Ring |
| 5 | 340-105 | 1 | Fitting-Elbow, 90 DEG |
| 5:1 | 237-80 | 1 | O-Ring |
| 5:2 | 237-30 | 1 | O-Ring |
| 6 | 2412-34 | 2 | Clamp-Hose |
| 7 | 353-949 | 1 | O-Ring |
| 8 | 119-2075 | 1 | Hose-HYD |
| 9 | 119-4477 | 1 | Hose-Inlet |

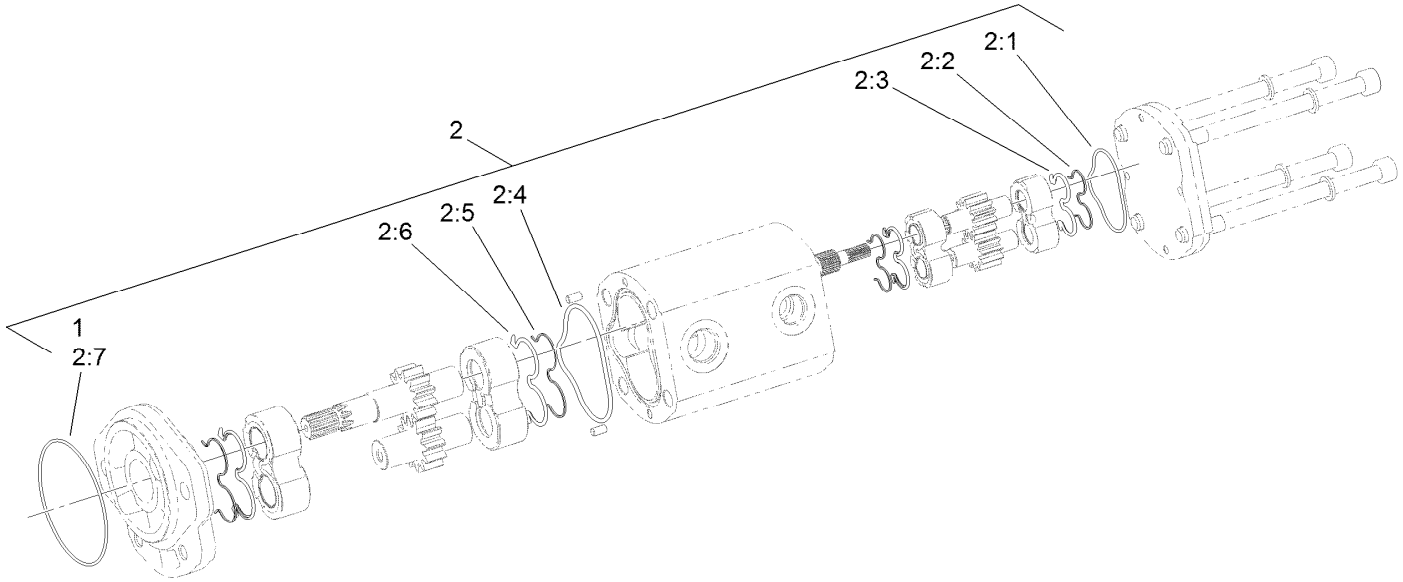


# Hydraulic Gear Pump Assembly No. 114-9956

| *Ref.* | *Part Number* | *Qty.* | *Description* |
|---|---|---|---|
| 1 | 353-949 | 1 | O-Ring |
| 2 | 119-7134 | 1 | Kit-Seal |
| 2:1 | | 1 | O-Ring ● |
| 2:2 | | 2 | Seal-Extrusion, Anti ● |
| 2:3 | | 2 | Seal-Backup ● |
| 2:4 | | 1 | O-Ring ● |
| 2:5 | | 2 | Seal-Extrusion, Anti ● |
| 2:6 | | 2 | Seal-Backup ● |
| 2:7 | | 1 | O-Ring ● |

● Not serviced separately

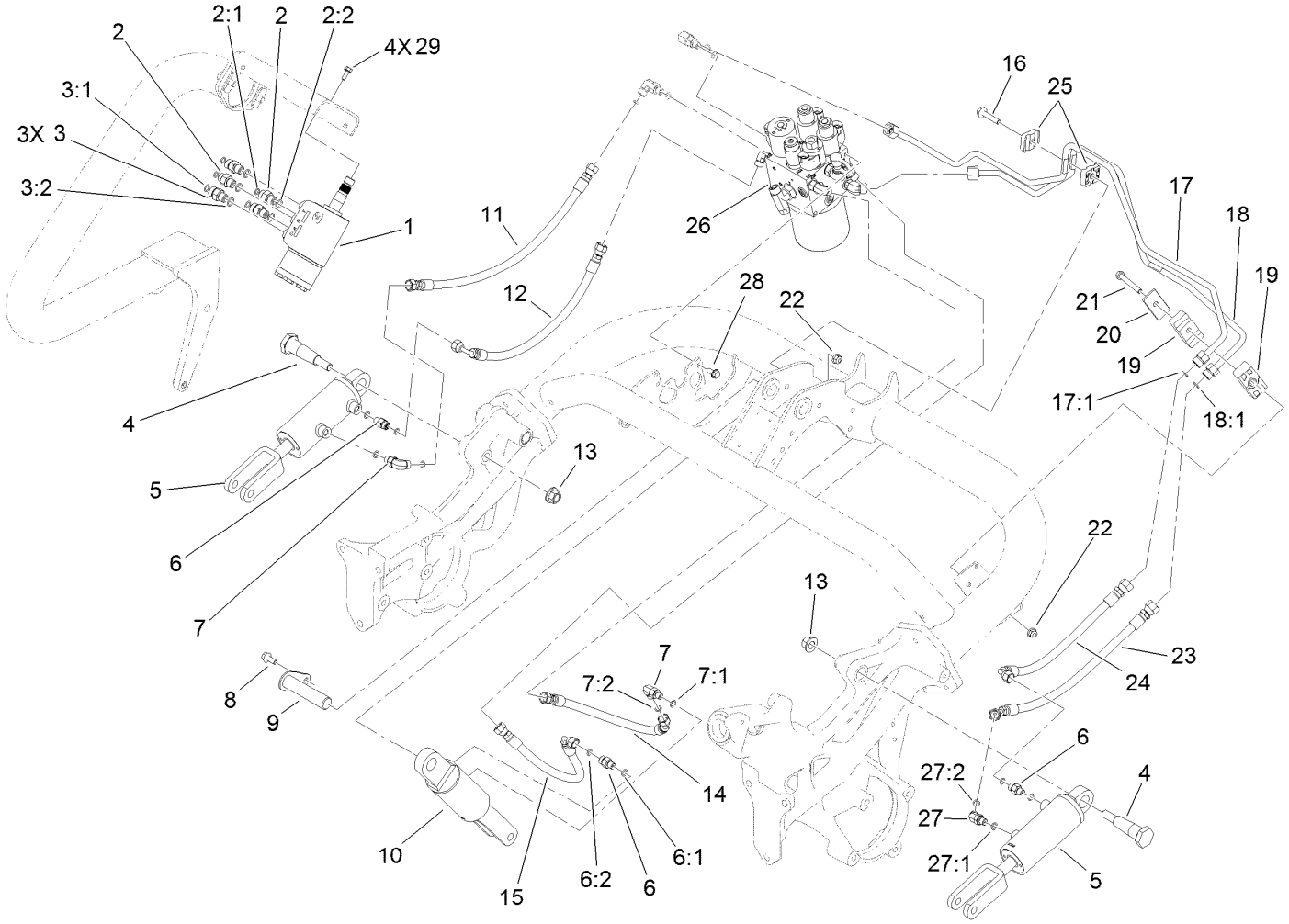


# Lift Circuit Assembly

| Ref. | Part Number | Qty. | Description |
|---|---|---|---|
| 1 | 114-4672 | 1 | Steering Valve ASM |
| 2 | 340-1 | 2 | Fitting-Straight |
| 2:1 | 237-21 | 1 | O-Ring |
| 2:2 | 237-42 | 1 | O-Ring |
| 3 | 340-2 | 3 | Fitting-Straight |
| 3:1 | 237-22 | 1 | O-Ring |
| 3:2 | 237-42 | 1 | O-Ring |
| 4 | 112-5709 | 2 | Pin-Tapered |
| 5 | 119-8129 | 2 | No. 2 And 3 HYD Cylinder ASM |
| 6 | 340-92 | 3 | Fitting-Straight |
| 6:1 | 237-78 | 1 | O-Ring |
| 6:2 | 237-21 | 1 | O-Ring |
| 7 | 340-132 | 2 | Fitting-Elbow, 90 DEG |
| 7:1 | 237-78 | 1 | O-Ring |
| 7:2 | 237-21 | 1 | O-Ring |
| 8 | 3234-47 | 1 | Screw-HHF |
| 9 | 119-8104 | 1 | Pin |

| Ref. | Part Number | Qty. | Description |
|---|---|---|---|
| 10 | 119-8128 | 1 | No. 1 HYD Cylinder ASM |
| 11 | 119-2052 | 1 | Hose-HYD |
| 12 | 119-2053 | 1 | Hose-HYD |
| 13 | 99-5107 | 2 | Nut-Lock |
| 14 | 119-2051 | 1 | Hose-HYD |
| 15 | 119-2050 | 1 | Hose-HYD |
| 16 | 115-1794 | 1 | Screw-HHF |
| 17 | 119-8126 | 1 | HYD Tube ASM |
| 17:1 | 237-22 | 1 | O-Ring |
| 18 | 119-8127 | 1 | HYD Tube ASM |
| 18:1 | 237-22 | 1 | O-Ring |
| 19 | 120-3200 | 2 | Clamp-Tube |
| 20 | 69-9761 | 1 | Plate-Cover |
| 21 | 322-12 | 1 | Screw-HH |
| 22 | 104-8300 | 3 | Nut-HF, NI |
| 23 | 119-2066 | 1 | Hose-HYD |
| 24 | 119-2065 | 1 | Hose-HYD |
| 25 | 56-7973 | 2 | Clamp-Tube |

● Not serviced separately

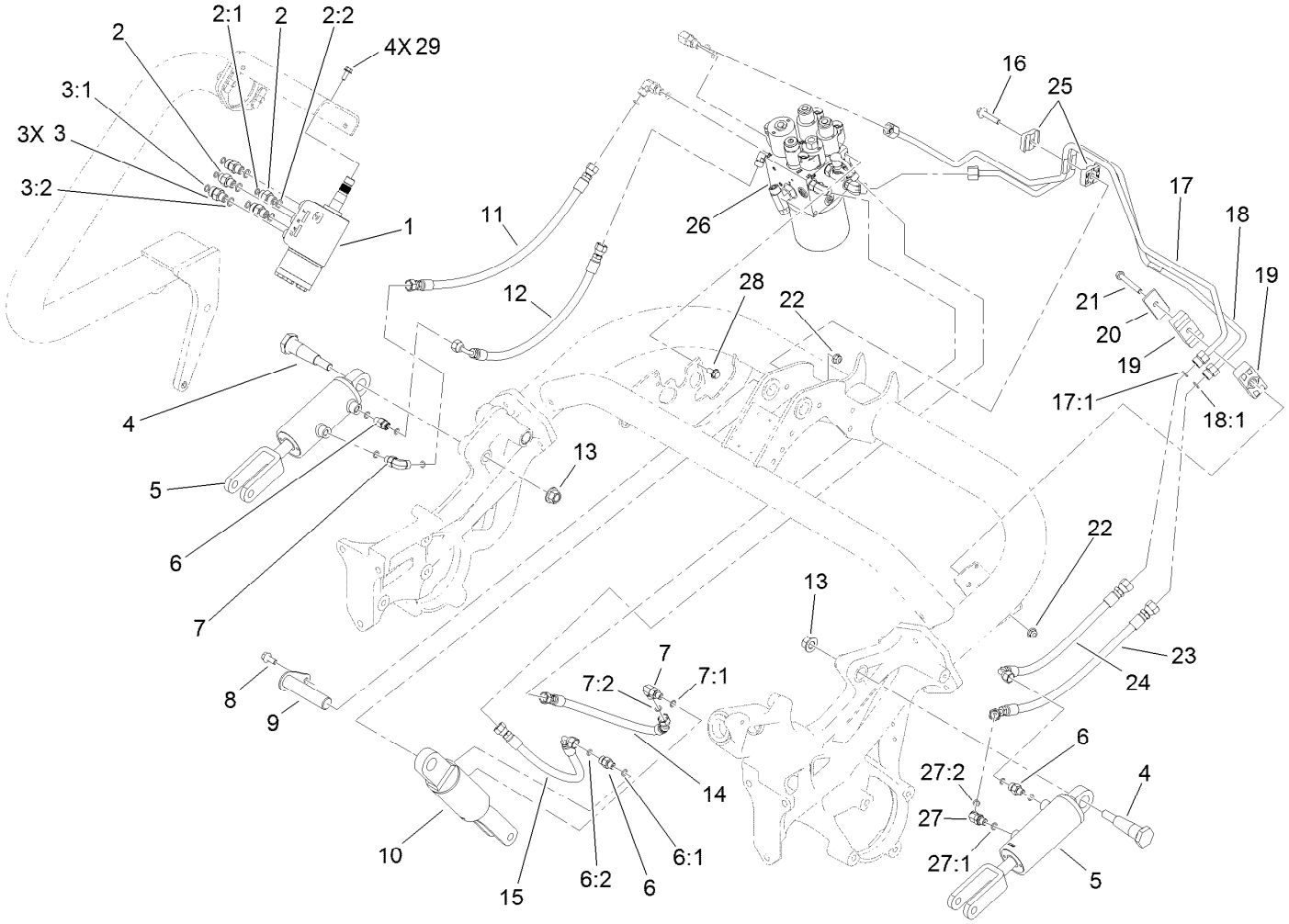


# Lift Circuit Assembly (continued)

| Ref. | Part Number | Qty. | Description |
|---|---|---|---|
| 26 | | 1 | Hydraulic Lift Manifold ASM ● |
| 27 | 340-103 | 1 | Fitting-HYD, 45 DEG |
| 27:1 | 237-78 | 1 | O-Ring |
| 27:2 | 237-21 | 1 | O-Ring |
| 28 | 3234-7 | 2 | Screw-HHF |
| 29 | 33103-016 | 4 | Screw-HHF |

● Not serviced separately

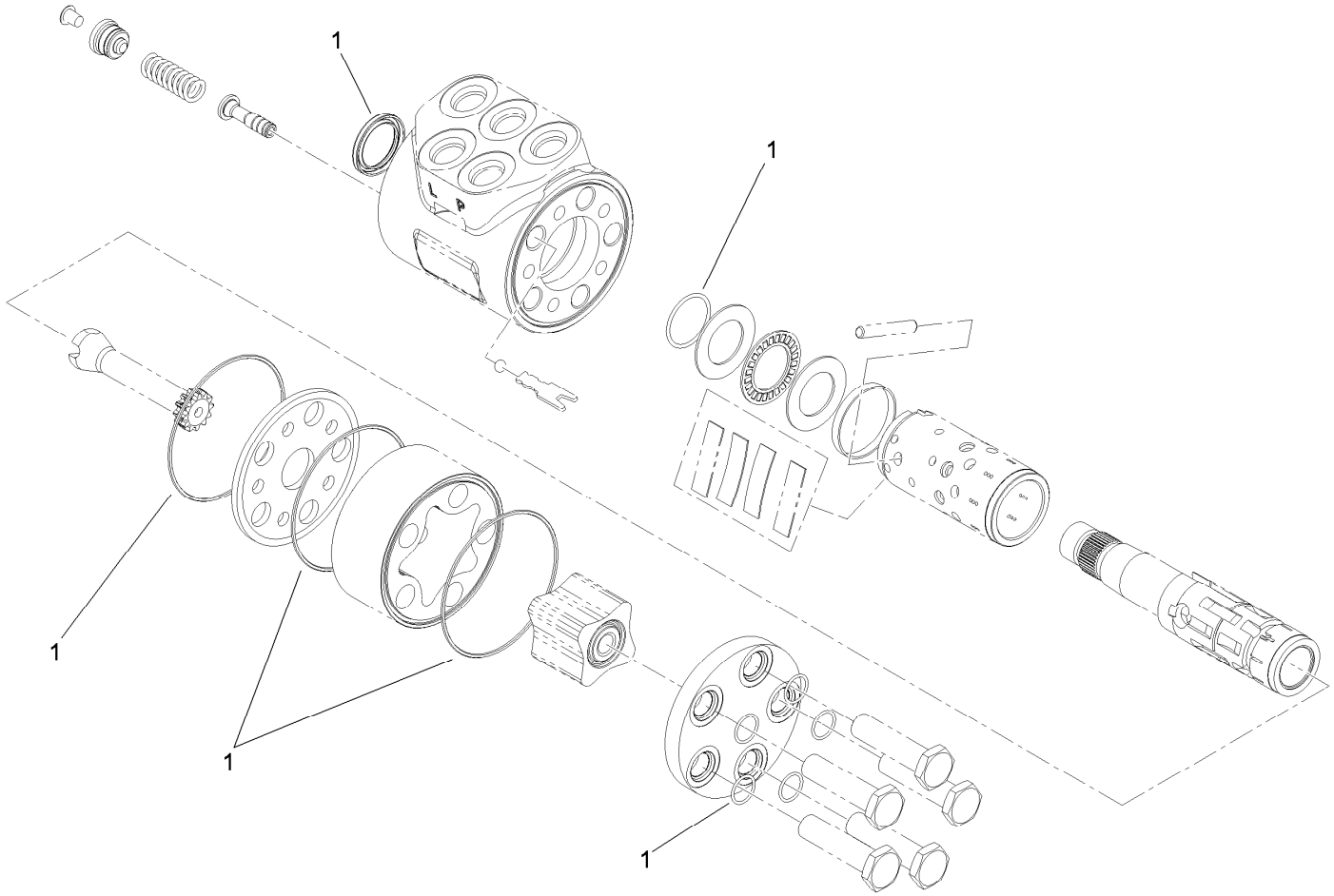


# Steering Valve Assembly No. 114-4672

| *Ref.* | *Part Number* | *Qty.* | *Description* |
|---|---|---|---|
| 1 | 106-6716 | 1 | Seal Kit |

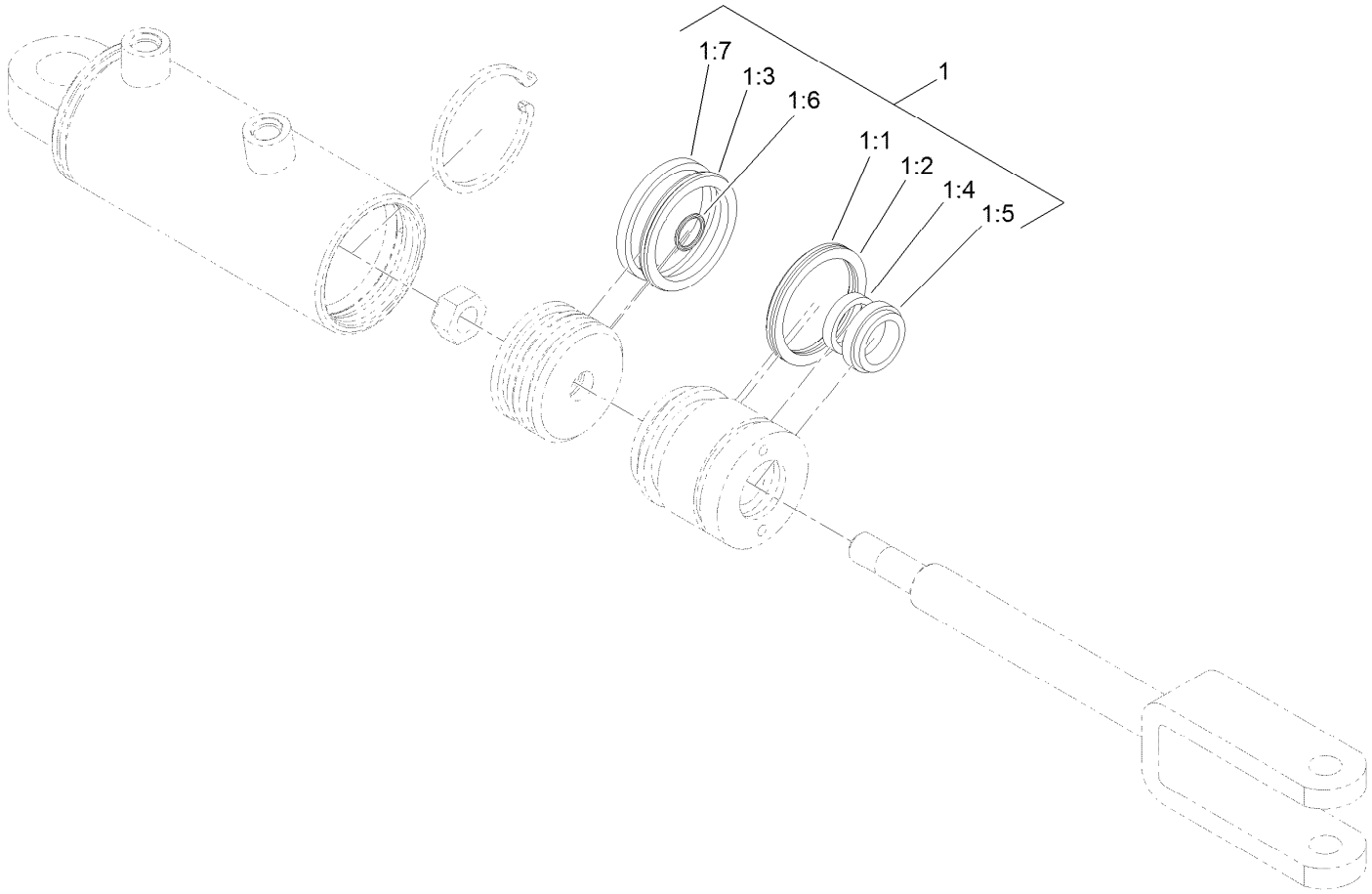


# Hydraulic Cylinder Assembly No. 119-8129

| *Ref.* | *Part Number* | *Qty.* | *Description* |
|---|---|---|---|
| 1 | 115-3410 | 1 | Seal Kit |
| 1:1 | | 1 | O-Ring ● |
| 1:2 | | 1 | Backup ● |
| 1:3 | | 1 | Bp Seal ● |
| 1:4 | | 1 | Bs Seal ● |
| 1:5 | | 1 | Seal-Dust ● |
| 1:6 | | 1 | O-Ring ● |
| 1:7 | | 1 | Ring-Wear ● |

● Not serviced separately

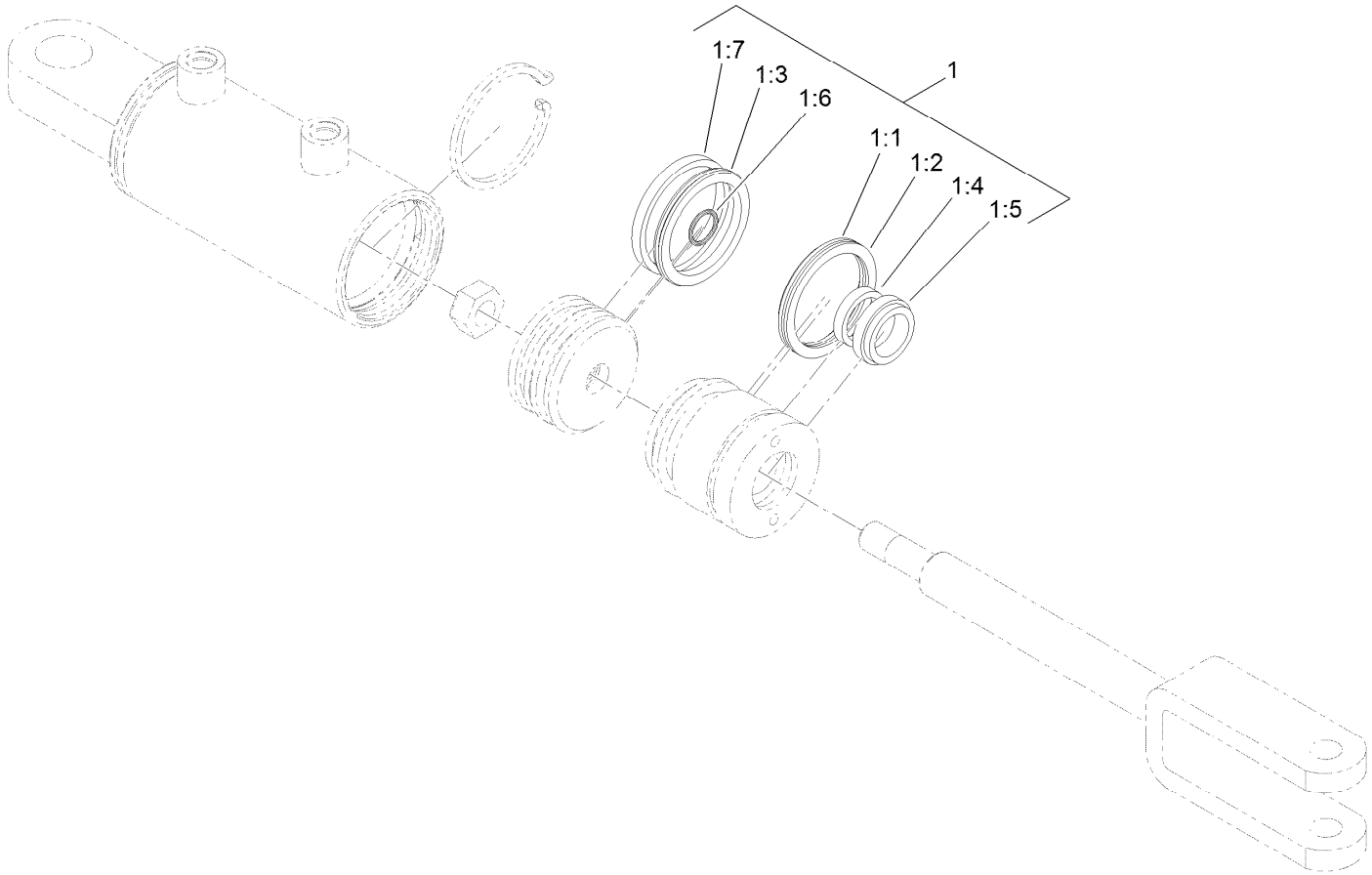


# Hydraulic Cylinder Assembly No. 119-8128

| *Ref.* | *Part Number* | *Qty.* | *Description* |
|---|---|---|---|
| 1 | 115-3410 | 1 | Seal Kit |
| 1:1 | | 1 | O-Ring ● |
| 1:2 | | 1 | Backup ● |
| 1:3 | | 1 | Bp Seal ● |
| 1:4 | | 1 | Bs Seal ● |
| 1:5 | | 1 | Seal-Dust ● |
| 1:6 | | 1 | O-Ring ● |
| 1:7 | | 1 | Ring-Wear ● |

● Not serviced separately

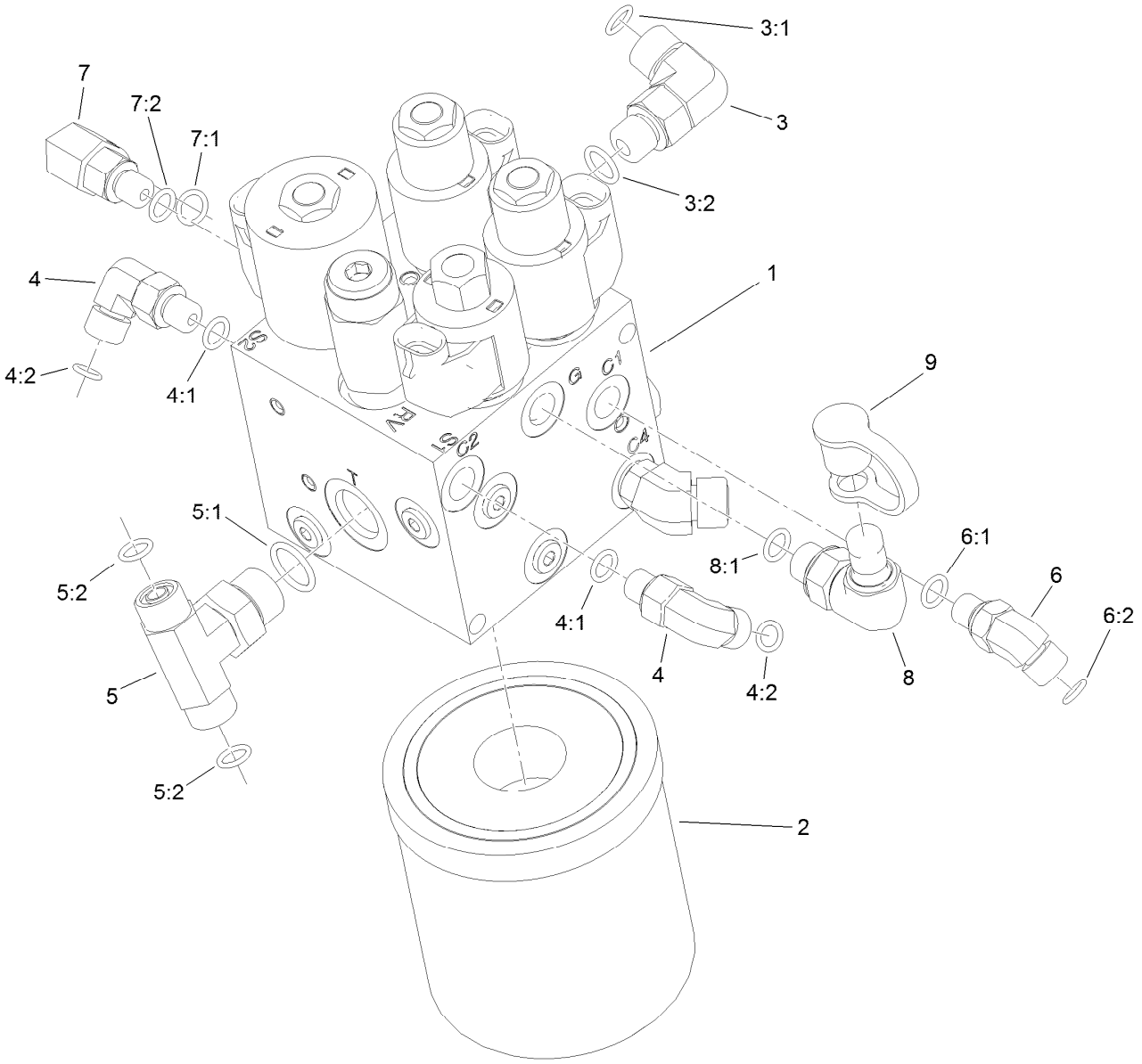


# Hydraulic Lift Manifold Assembly

| Ref. | Part Number | Qty. | Description |
|---|---|---|---|
| 1 | 125-5187 | 1 | Manifold-Lift, HYD |
| 2 | 108-5194 | 1 | Filter-Oil, HYD |
| 3 | 340-77 | 1 | Fitting-Elbow, 90 DEG |
| 3:1 | 237-22 | 1 | O-Ring |
| 3:2 | 237-42 | 1 | O-Ring |
| 4 | 340-132 | 2 | Fitting-Elbow, 90 DEG |
| 4:1 | 237-78 | 1 | O-Ring |
| 4:2 | 237-21 | 1 | O-Ring |
| 5 | 92-4799 | 1 | Fitting-Tee, HYD |
| 5:1 | 237-79 | 1 | O-Ring |

| Ref. | Part Number | Qty. | Description |
|---|---|---|---|
| 5:2 | 237-22 | 2 | O-Ring |
| 6 | 340-103 | 1 | Fitting-HYD, 45 DEG |
| 6:1 | 237-78 | 1 | O-Ring |
| 6:2 | 237-21 | 1 | O-Ring |
| 7 | 340-97 | 1 | Fitting-Elbow, 90 DEG |
| 7:1 | 237-22 | 1 | O-Ring |
| 7:2 | 237-78 | 1 | O-Ring |
| 8 | 115-9147 | 1 | Fitting-Elbow, 90 DEG |
| 8:1 | 237-78 | 1 | O-Ring |
| 9 | 354-79 | 1 | Cap-Dust |

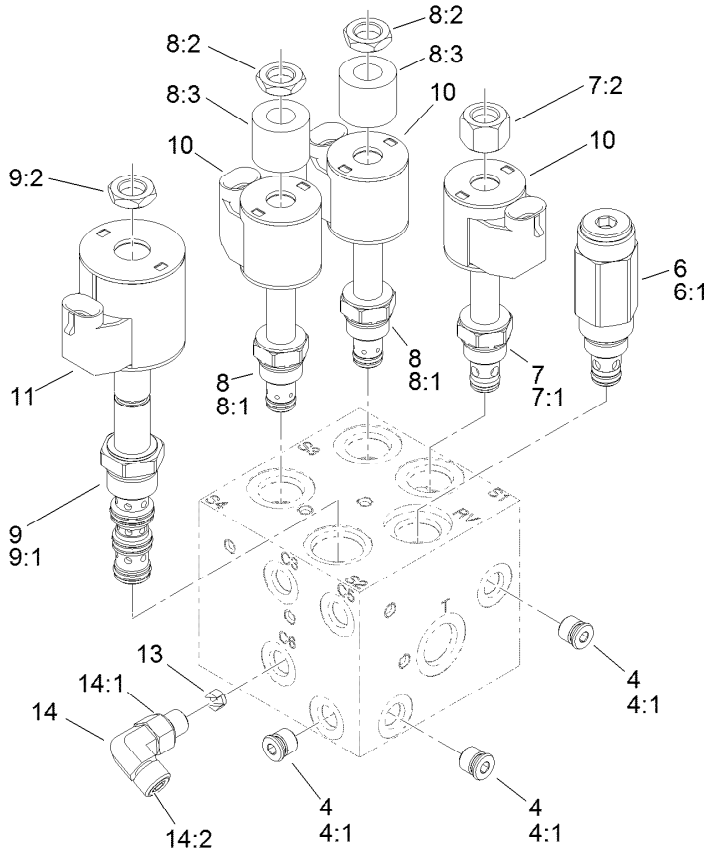


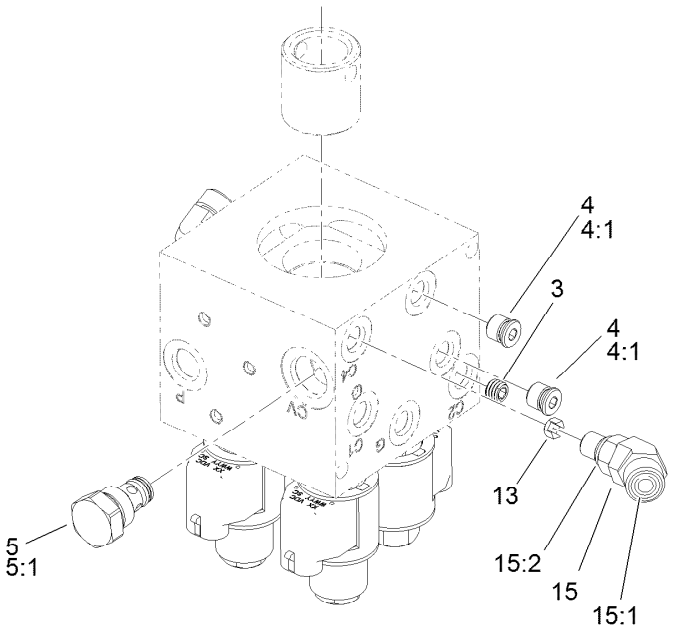


# Hydraulic Lift Manifold Assembly No. 125-5187

| Ref. | Part Number | Qty. | Description |
|---|---|---|---|
| 3 | 119-7144 | 1 | Orifice (.037 Inch) |
| 4 | 353-990 | 5 | Plug ASM |
| 4:1 | 237-78 | 1 | O-Ring |
| 5 | 107-7524 | 1 | Check Valve ASM |
| 5:1 | 105-9156 | 1 | Seal Kit |
| 6 | 112-9207 | 1 | Valve-Relief |
| 6:1 | 105-9156 | 1 | Seal Kit |
| 7 | 107-7517 | 1 | Valve-Solenoid |
| 7:1 | 105-9156 | 1 | Seal Kit |
| 7:2 | 107-7812 | 1 | Nut-Solenoid |
| 8 | 110-8898 | 2 | Valve-Solenoid |
| 8:1 | 107-7527 | 1 | Seal Kit |
| 8:2 | 110-2634 | 1 | Nut-Coil |

| Ref. | Part Number | Qty. | Description |
|---|---|---|---|
| 8:3 | 110-8909 | 1 | Spacer-Coil |
| 9 | 110-8906 | 1 | Valve-Solenoid |
| 9:1 | 110-8908 | 1 | Spool Valve Seal Kit |
| 9:2 | 110-2634 | 1 | Nut-Coil |
| 10 | 110-0497 | 3 | Coil-Solenoid |
| 11 | 110-6344 | 1 | Coil-12V, DC |
| 13 | 125-5211 | 2 | Orifice-Control, Flow (0.030) |
| 14 | 340-132 | 1 | Fitting-Elbow, 90 DEG |
| 14:1 | 237-78 | 1 | O-Ring |
| 14:2 | 237-21 | 1 | O-Ring |
| 15 | 340-54 | 1 | Elbow-45 DEG |
| 15:1 | 237-22 | 1 | O-Ring |
| 15:2 | 237-78 | 1 | O-Ring |

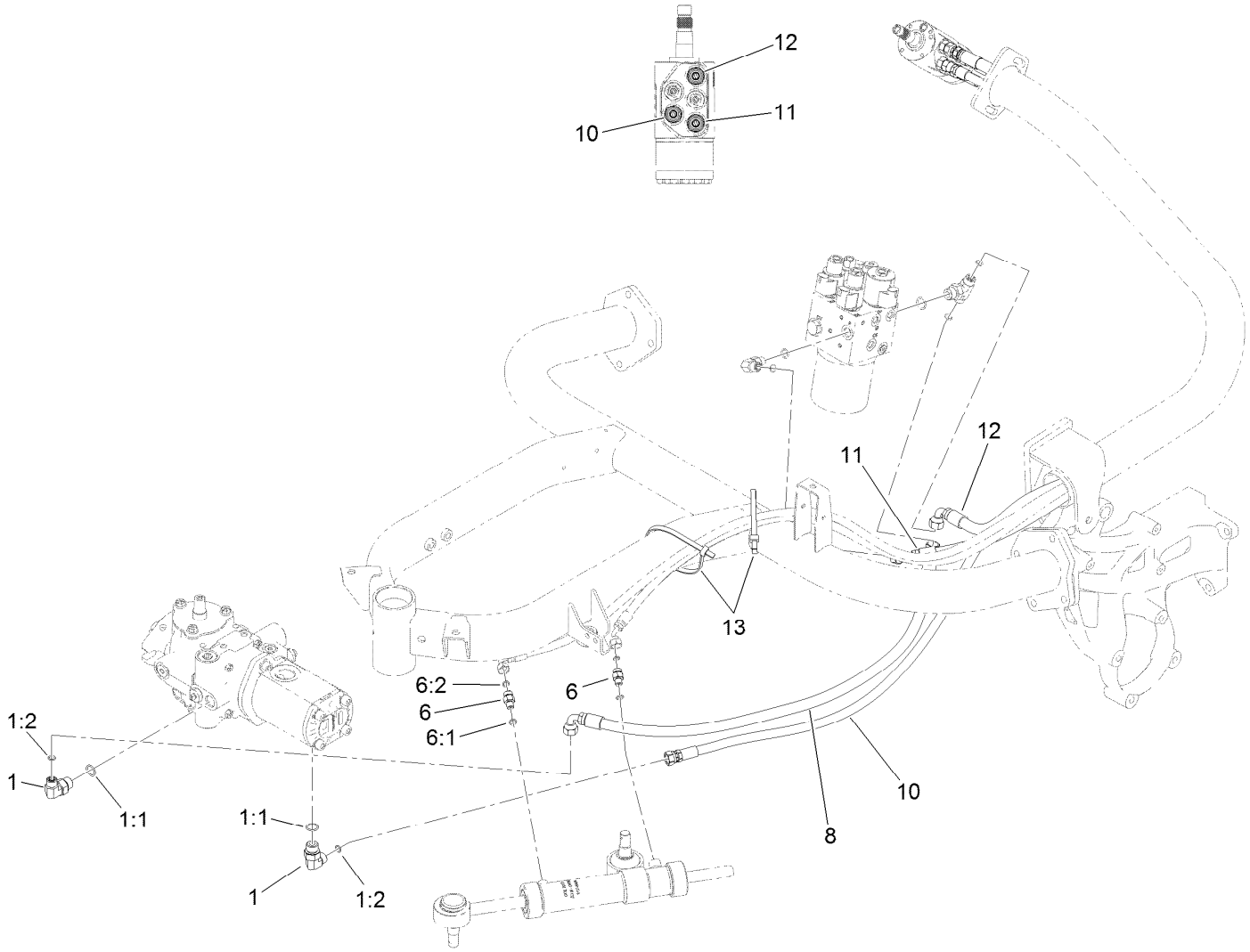


# Steering Circuit Assembly (1)

| *Ref.* | *Part Number* | *Qty.* | *Description* |
|---|---|---|---|
| 1 | 340-18 | 2 | Fitting-HYD, 90 DEG |
| 1:1 | 237-79 | 1 | O-Ring |
| 1:2 | 237-22 | 1 | O-Ring |
| 6 | 340-92 | 2 | Fitting-Straight |
| 6:1 | 237-78 | 1 | O-Ring |
| 6:2 | 237-21 | 1 | O-Ring |
| 8 | 125-5168 | 1 | Hose-HYD |
| 10 | 125-5167 | 1 | Hose-HYD |
| 11 | 117-3683 | 1 | Hose-HYD |
| 12 | 125-5166 | 1 | Hose-HYD |
| 13 | 3334-945 | 2 | Tie-Cable |

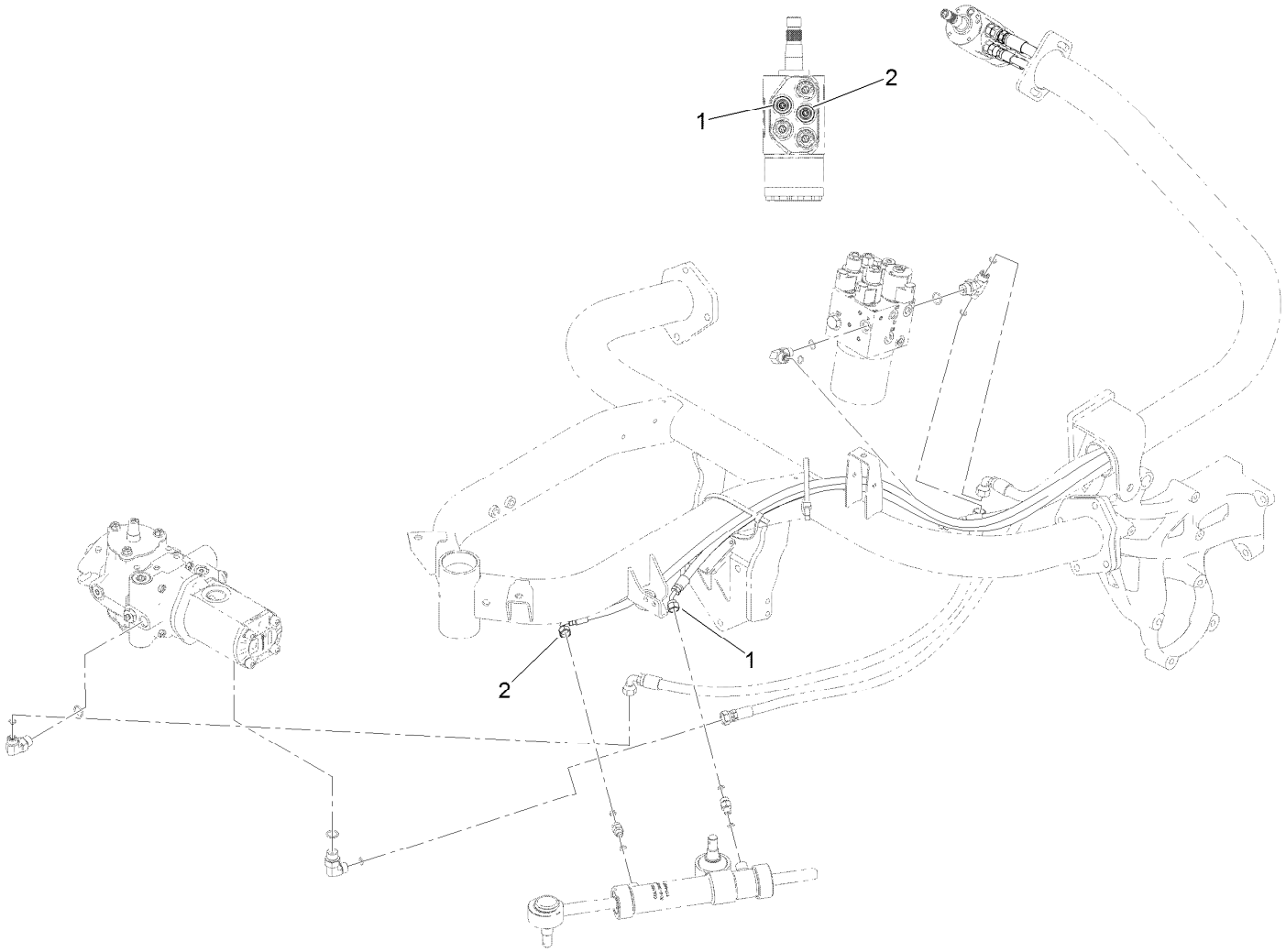


# Steering Circuit Assembly (3)

| *Ref.* | *Part Number* | *Qty.* | *Description* |
|---|---|---|---|
| 1 | 117-3685 | 1 | Hose-HYD |
| 2 | 117-3688 | 1 | Hose-HYD |

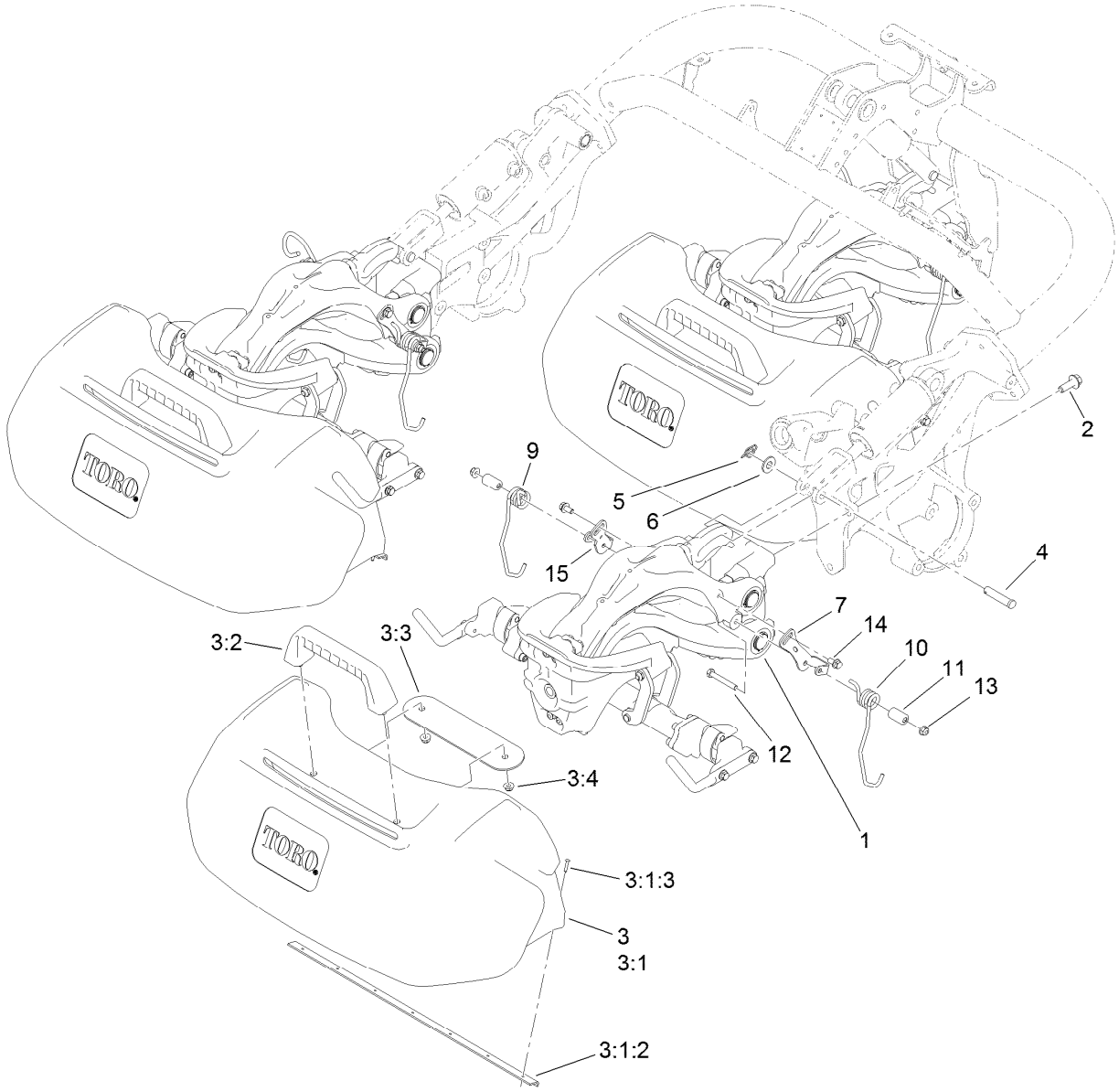


# Suspension and Basket Assembly

| Ref. | Part Number | Qty. | Description |
|---|---|---|---|
| 1 | | 3 | Suspension ASM ● |
| 2 | 117-9035 | 9 | Screw-HHF |
| 3 | 117-8096 | 3 | Basket ASM |
| 3:1 | 120-2775 | 1 | Grass Basket ASM |
| 3:1:2 | 120-2776 | 1 | Support-Basket |
| 3:1:3 | 3290-382 | 9 | Rivet-Pop |
| 3:2 | 117-8088 | 1 | Handle-Grab |
| 3:3 | 117-8092-03 | 1 | Plate-Mounting |
| 3:4 | 104-8300 | 2 | Nut-HF, NI |
| 4 | 92-2739 | 3 | Pin-Clevis |

| Ref. | Part Number | Qty. | Description |
|---|---|---|---|
| 5 | 112-1491 | 3 | Pin-Cotter |
| 6 | 29-8910 | 3 | Washer |
| 7 | 117-6822 | 3 | Retainer-Spring, LH |
| 9 | 117-6826 | 3 | Spring-Stabilizer, RH |
| 10 | 117-6827 | 3 | Spring-Stabilizer, LH |
| 11 | 117-6825 | 6 | Spacer |
| 12 | 322-12 | 6 | Screw-HH |
| 13 | 104-8300 | 6 | Nut-HF, NI |
| 14 | 114-7728 | 6 | Screw-HF |
| 15 | 117-6821 | 3 | Retainer-Spring, RH |

● Not serviced separately

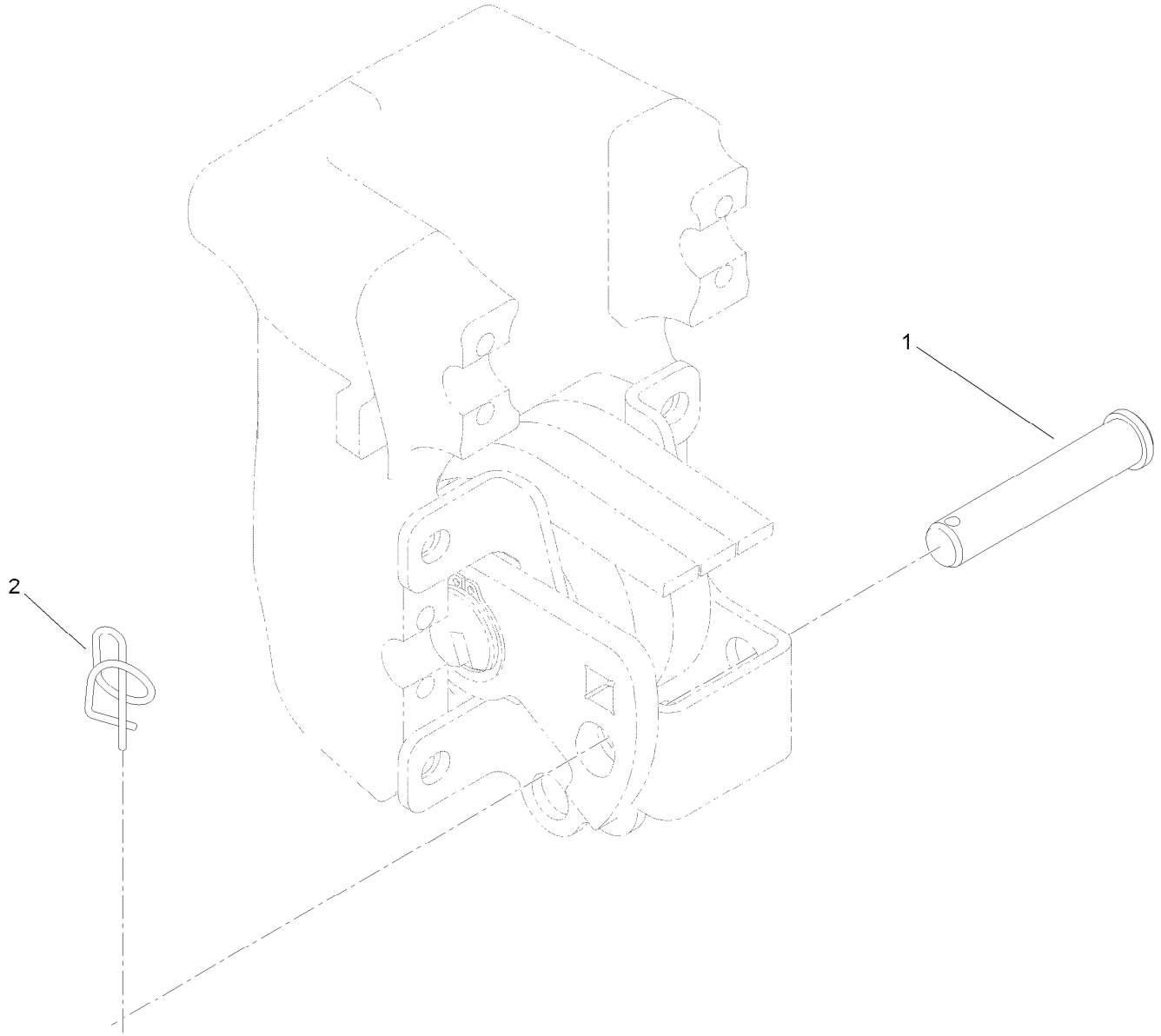


# Suspension Pin Position Assembly

| Ref. | Part Number | Qty. | Description |
|---|---|---|---|
| 1 | 100-6541 | 3 | Pin-Clevis |
| 2 | 112-1491 | 3 | Pin-Cotter |

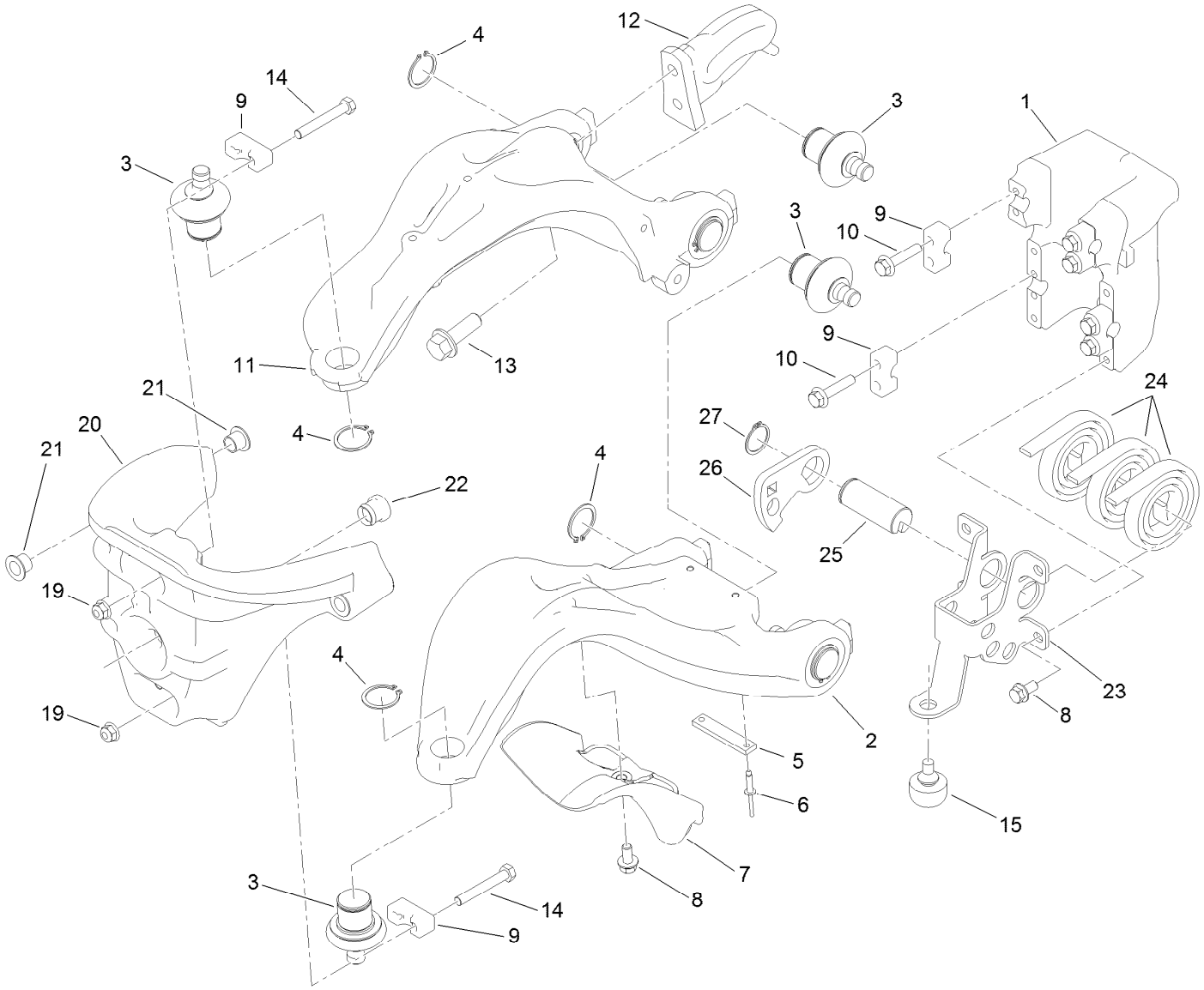


# Suspension A-Arm Assembly

| Ref. | Part Number | Qty. | Description |
|---|---|---|---|
| 1 | 117-9480 | 1 | Mount-Pivot, A-Arms |
| 2 | 117-6656 | 1 | A-Arm, Lower |
| 3 | 117-6658 | 6 | Balljoint |
| 4 | 120-3225 | 6 | Ring-Retaining, EXT |
| 5 | 117-6674 | 1 | Plate-Striker |
| 6 | 3269-28 | 2 | Rivet-Pop |
| 7 | 117-6755 | 1 | Stop-Steering |
| 8 | 114-7728 | 5 | Screw-HF |
| 9 | 112-5647 | 6 | Clamp |
| 10 | 132-3837 | 8 | Screw-HHF |
| 11 | 117-6648 | 1 | A-Arm, Upper |
| 12 | 117-6650 | 1 | Plate-Lift |

| Ref. | Part Number | Qty. | Description |
|---|---|---|---|
| 13 | 100-6116 | 2 | Screw-HHF |
| 14 | 132-3838 | 4 | Screw-HH |
| 15 | 87-2440 | 1 | Bumper-Rubber |
| 19 | 104-8300 | 4 | Nut-HF, NI |
| 20 | 120-3216 | 1 | Steering Head ASM |
| 21 | 93-2561 | 4 | Bushing-Flange |
| 22 | 117-6819 | 1 | Grommet |
| 23 | 121-9568 | 1 | Mount-Counter Balance |
| 24 | 114-9306 | 3 | Spring |
| 25 | 117-6608 | 1 | Pin |
| 26 | 117-6738 | 1 | Arm-Tensioner |
| 27 | 32151-29 | 1 | Ring-Retaining |

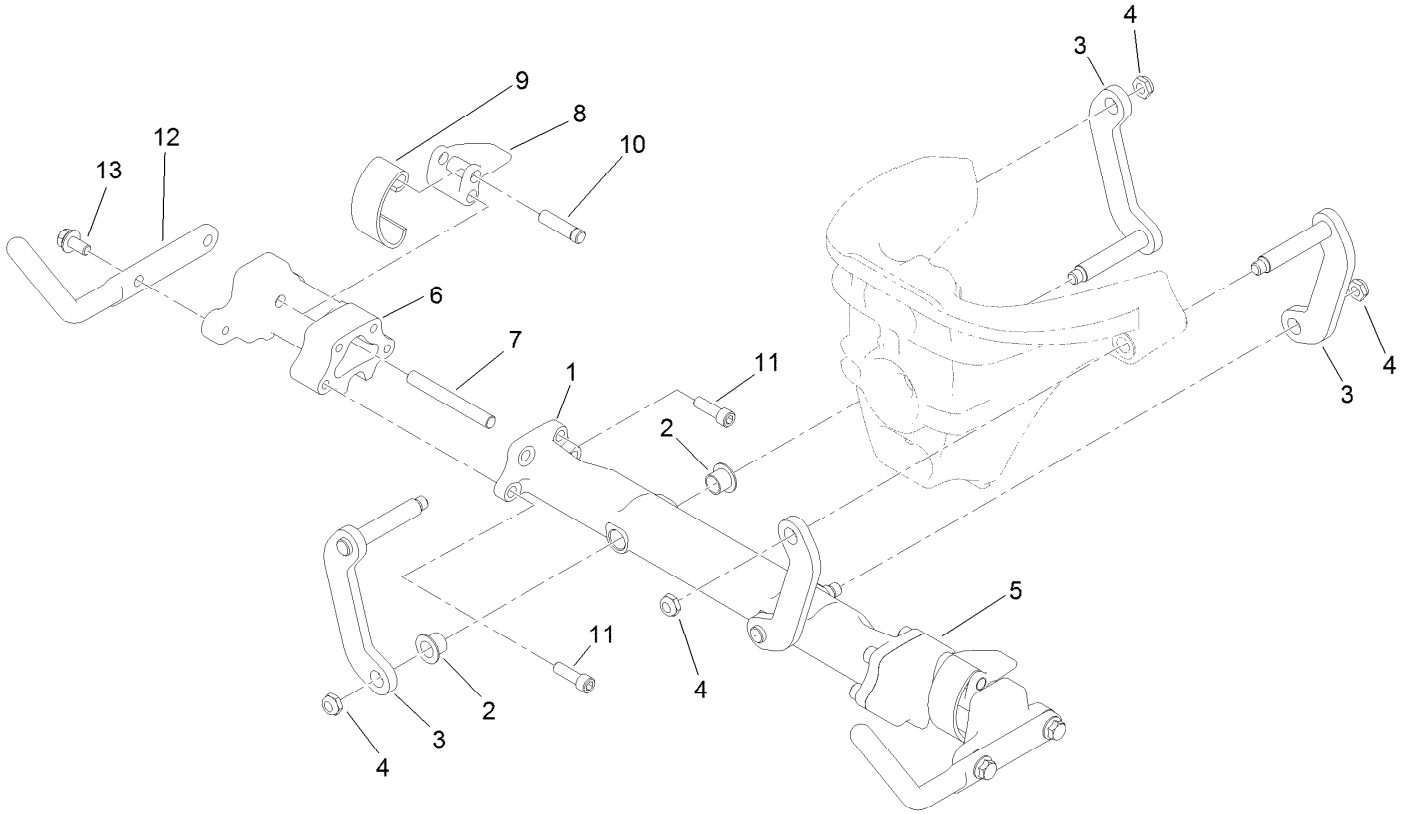


# Suspension Crossarm Assembly

| Ref. | Part Number | Qty. | Description |
|---|---|---|---|
| 1 | 120-3217 | 1 | Crossarm |
| 2 | 93-2561 | 4 | Bushing-Flange |
| 3 | 117-6654 | 4 | Link |
| 4 | 3296-59 | 4 | Nut-Lock, NI |
| 5 | 117-9482 | 1 | Mount-Cross Arm, LH |
| 6 | 117-9492 | 1 | Mount-Cross Arm, RH |
| 7 | 114-8051 | 2 | Pin-Pivot |
| 8 | 114-8047 | 2 | Lever |
| 9 | 114-8048 | 2 | Spring |
| 10 | 114-8049 | 2 | Pin-Pivot |
| 11 | 120-3227 | 8 | Screw-HSH |
| 12 | 125-5152-03 | 2 | Horn-Basket |
| 13 | 114-7728 | 4 | Screw-HF |

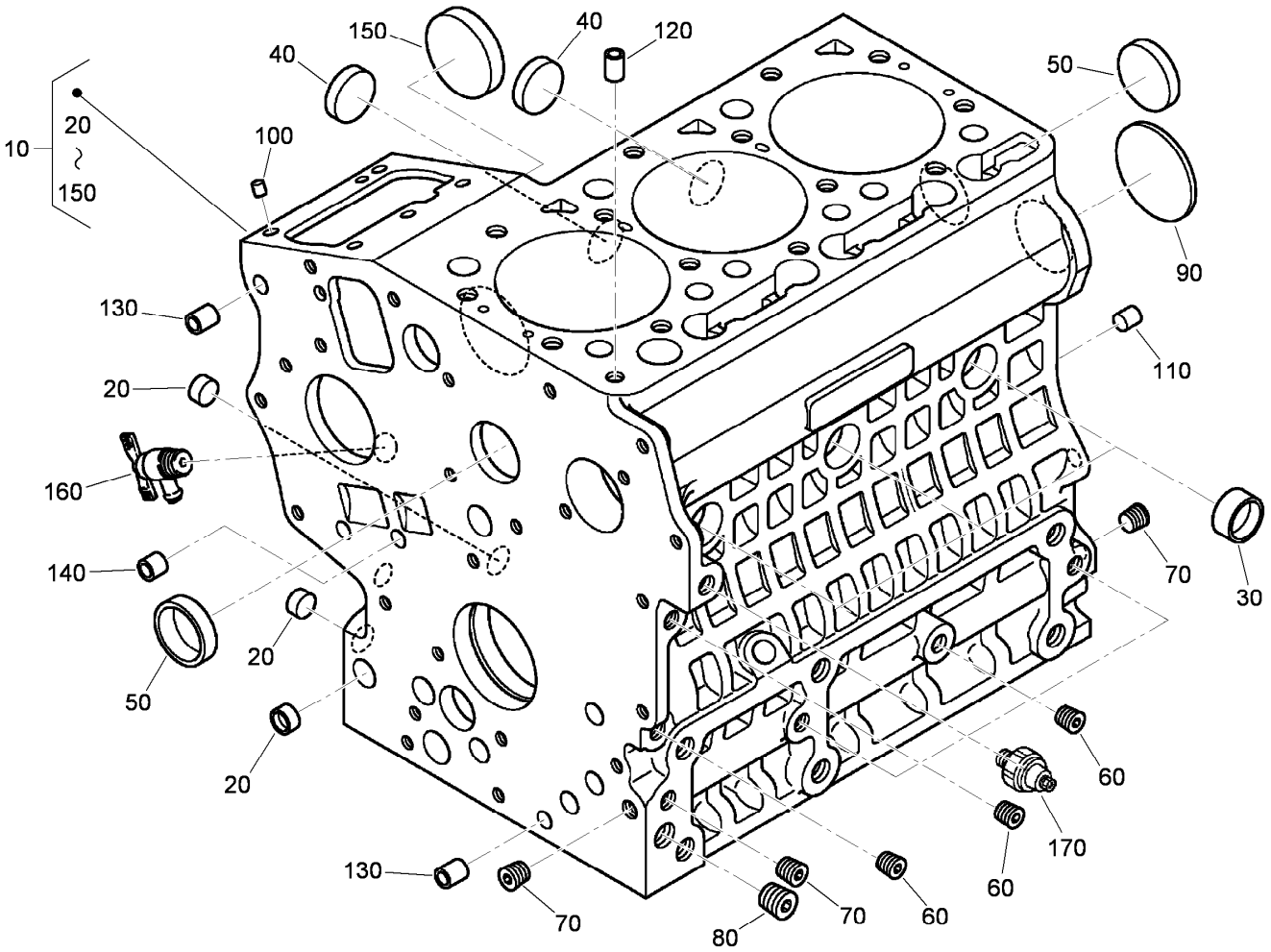


# Crankcase Assembly

| Ref. | Part Number | Qty. | Description |
|---|---|---|---|
| 10 | 120-3120 | 1 | Crankcase ASM |
| 20 | 100-2019 | 3 | Cap-Sealing |
| 30 | 100-2020 | 3 | Cap-Sealing |
| 40 | 110-3702 | 2 | Cap-Sealing |
| 50 | 98-9398 | 2 | Cap-Sealing |
| 60 | 98-9687 | 5 | Plug |
| 70 | 98-7487 | 3 | Plug |
| 80 | 98-7488 | 1 | Plug |
| 90 | 100-1851 | 1 | Plug-Expansion |

| Ref. | Part Number | Qty. | Description |
|---|---|---|---|
| 100 | 98-9375 | 2 | Pin-Straight |
| 110 | 98-9377 | 2 | Pin-Straight |
| 120 | 98-7506 | 1 | Pin-Pipe |
| 130 | 98-9387 | 2 | Pin-Pipe |
| 140 | 100-2051 | 2 | Pin-Pipe |
| 150 | 100-1991 | 1 | Cover-Fuel, Camshaft |
| 160 | 120-3121 | 1 | Draincock ASM |
| 170 | 98-7764 | 1 | Switch-Oil |

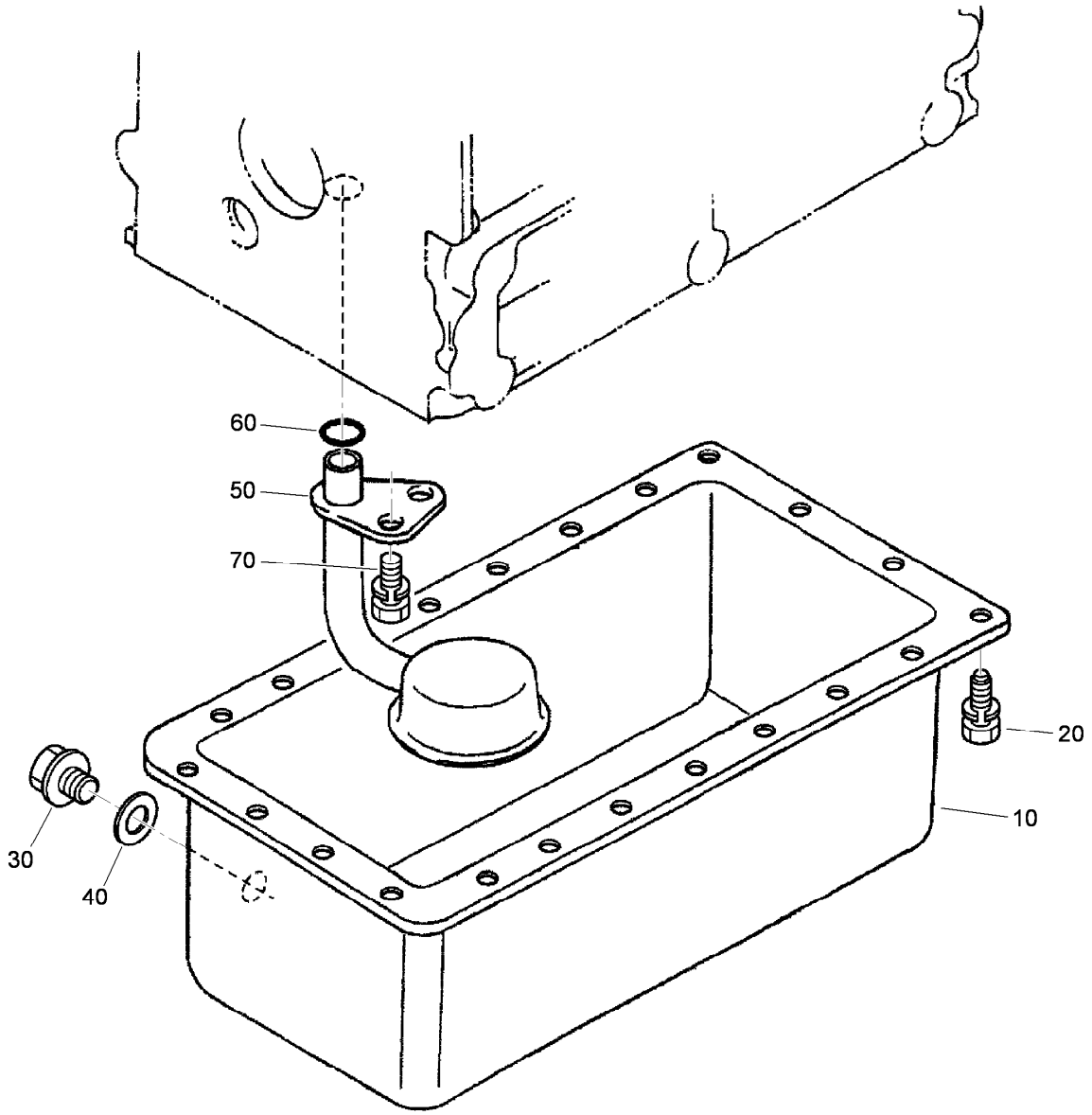


# Oil Pan Assembly

| *Ref.* | *Part Number* | *Qty.* | *Description* |
|---|---|---|---|
| 10 | 120-3122 | 1 | Oil Pan ASM |
| 20 | 98-9351 | 22 | Bolt |
| 30 | 114-8151 | 1 | Plug-Drain |
| 40 | 98-7524 | 1 | Gasket |
| 50 | 100-2001 | 1 | Strainer-Pickup, Oil |
| 60 | 105-3776 | 1 | O-Ring |
| 70 | 100-9195 | 1 | Bolt |

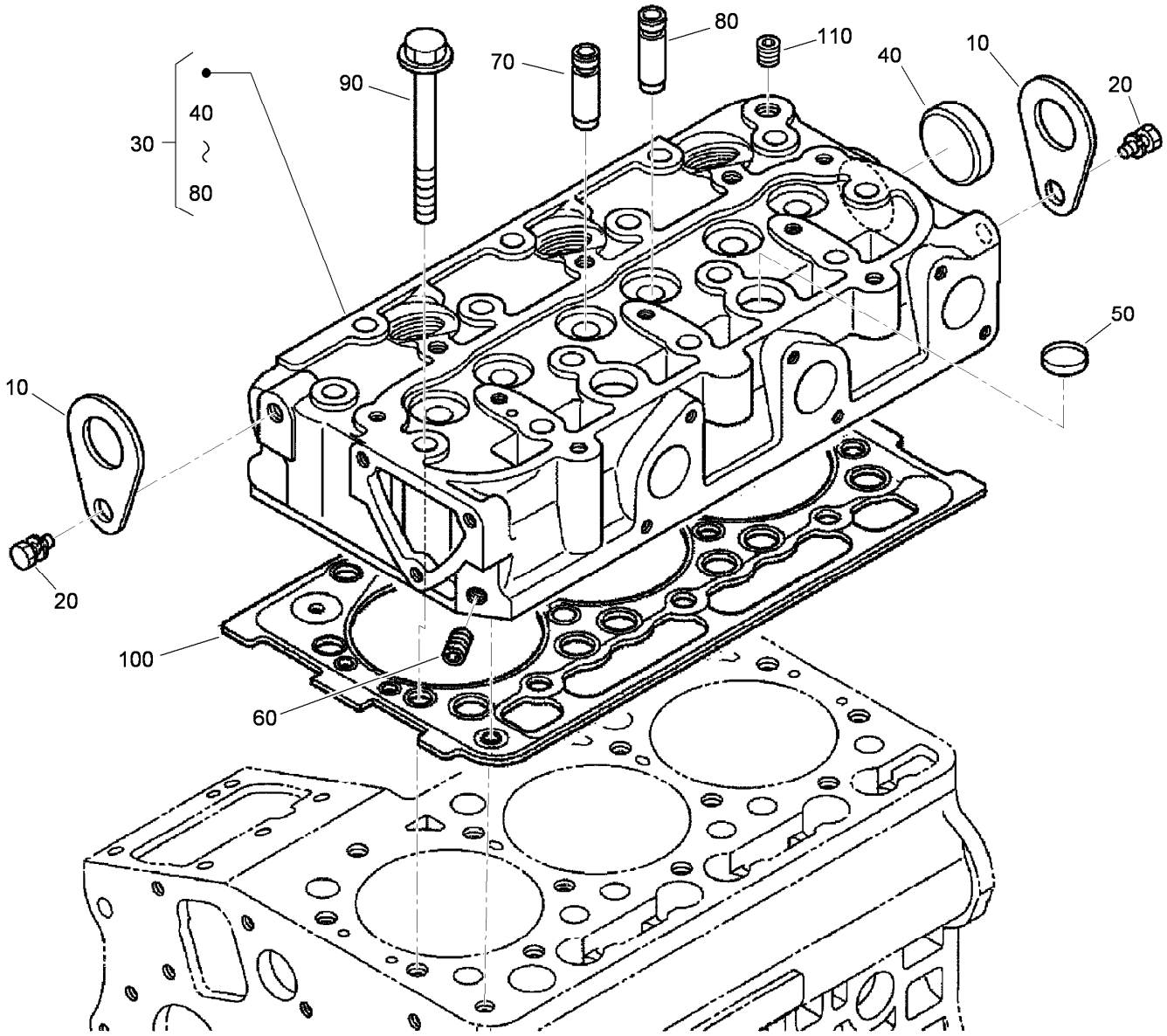


# Cylinder Head Assembly

| Ref. | Part Number | Qty. | Description |
|---|---|---|---|
| 10 | 98-7531 | 2 | Hook-Engine |
| 20 | 98-7526 | 2 | Bolt |
| 30 | 120-3123 | 1 | Cylinder Head ASM |
| 40 | 105-3705 | 1 | Cap-Sealing |
| 50 | 98-9389 | 2 | Cap-Sealing |
| 60 | 98-7540 | 1 | Plug |
| 70 | 100-1882 | 3 | Guide-Valve, Inlet |
| 80 | 100-1883 | 3 | Guide-Valve, Exhaust |
| 90 | 100-1820 | 14 | Bolt-Head, Cylinder |
| 100 | 112-2520 | 1 | Gasket-Head, Cylinder |
| 110 | 98-9444 | 1 | Plug |

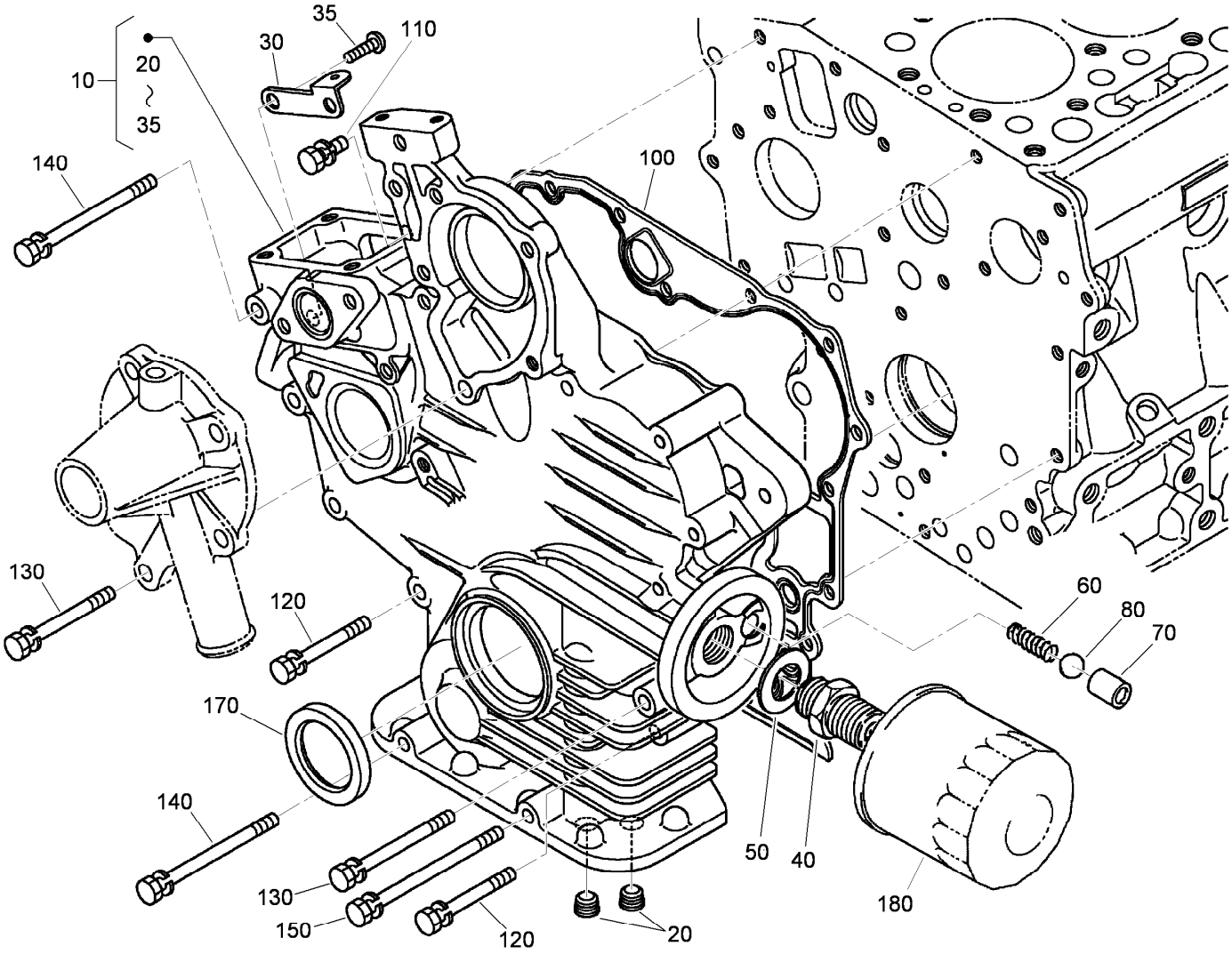


# Gear Case Assembly

| Ref. | Part Number | Qty. | Description |
|---|---|---|---|
| 10 | 120-3138 | 1 | Gear Case ASM |
| 20 | 98-7488 | 2 | Plug |
| 30 | 110-3708 | 1 | Stay-Spring, Start |
| 35 | 100-2040 | 2 | Screw |
| 40 | 98-9388 | 1 | Joint-Pipe |
| 50 | 100-1926 | 1 | Washer-Plain |
| 60 | 100-2004 | 1 | Spring |
| 70 | 100-1894 | 1 | Seat-Valve |
| 80 | 100-1792 | 1 | Ball |

| Ref. | Part Number | Qty. | Description |
|---|---|---|---|
| 100 | 117-0327 | 1 | Gasket-Case, Gear |
| 110 | 98-7605 | 1 | Bolt |
| 120 | 105-3797 | 9 | Bolt |
| 130 | 100-1922 | 2 | Bolt |
| 140 | 98-9357 | 2 | Bolt |
| 150 | 110-3710 | 1 | Bolt |
| 170 | 100-1971 | 1 | Seal-Oil |
| 180 | 100-1892 | 1 | Cartridge-Filter, Oil |

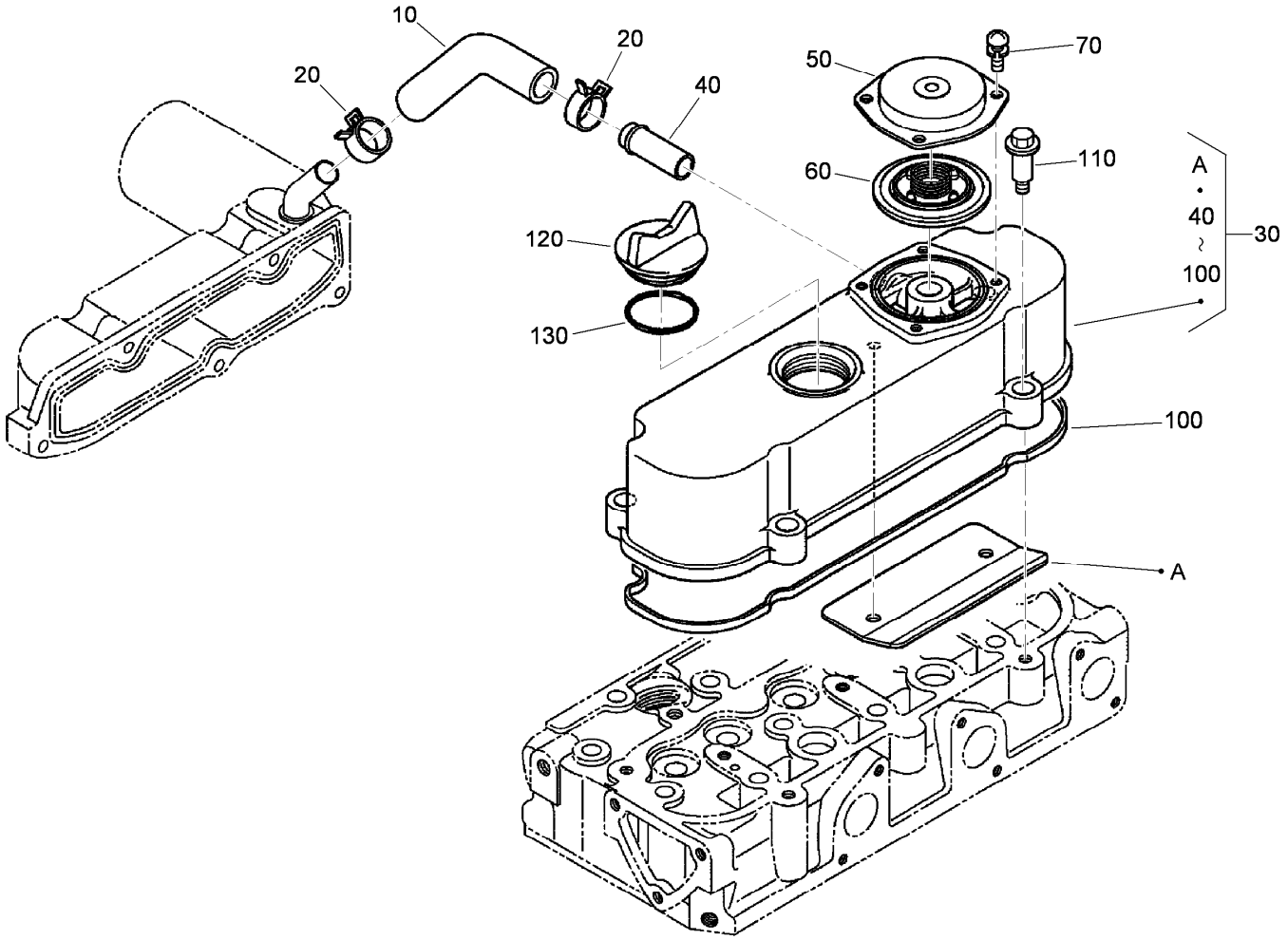


# Cylinder Head Cover Assembly

| Ref. | Part Number | Qty. | Description |
|---|---|---|---|
| 10 | 120-3139 | 1 | Tube-Breather |
| 20 | 110-3712 | 2 | Clamp-Hose |
| 30 | 112-8332 | 1 | Cylinder Head Cover ASM |
| 40 | 98-9580 | 1 | Pipe-Return, Water |
| 50 | 110-3714 | 1 | Cover-Breather |
| 60 | 110-3715 | 1 | Valve-Breather |
| 70 | 98-9364 | 4 | Screw (With Washer) |
| 100 | 112-2521 | 1 | Gasket-Cover, Head |
| 110 | 108-7063 | 4 | Bolt |
| 120 | 107-9075 | 1 | Plug-Filler, Oil |
| 130 | 120-2560 | 1 | O-Ring |

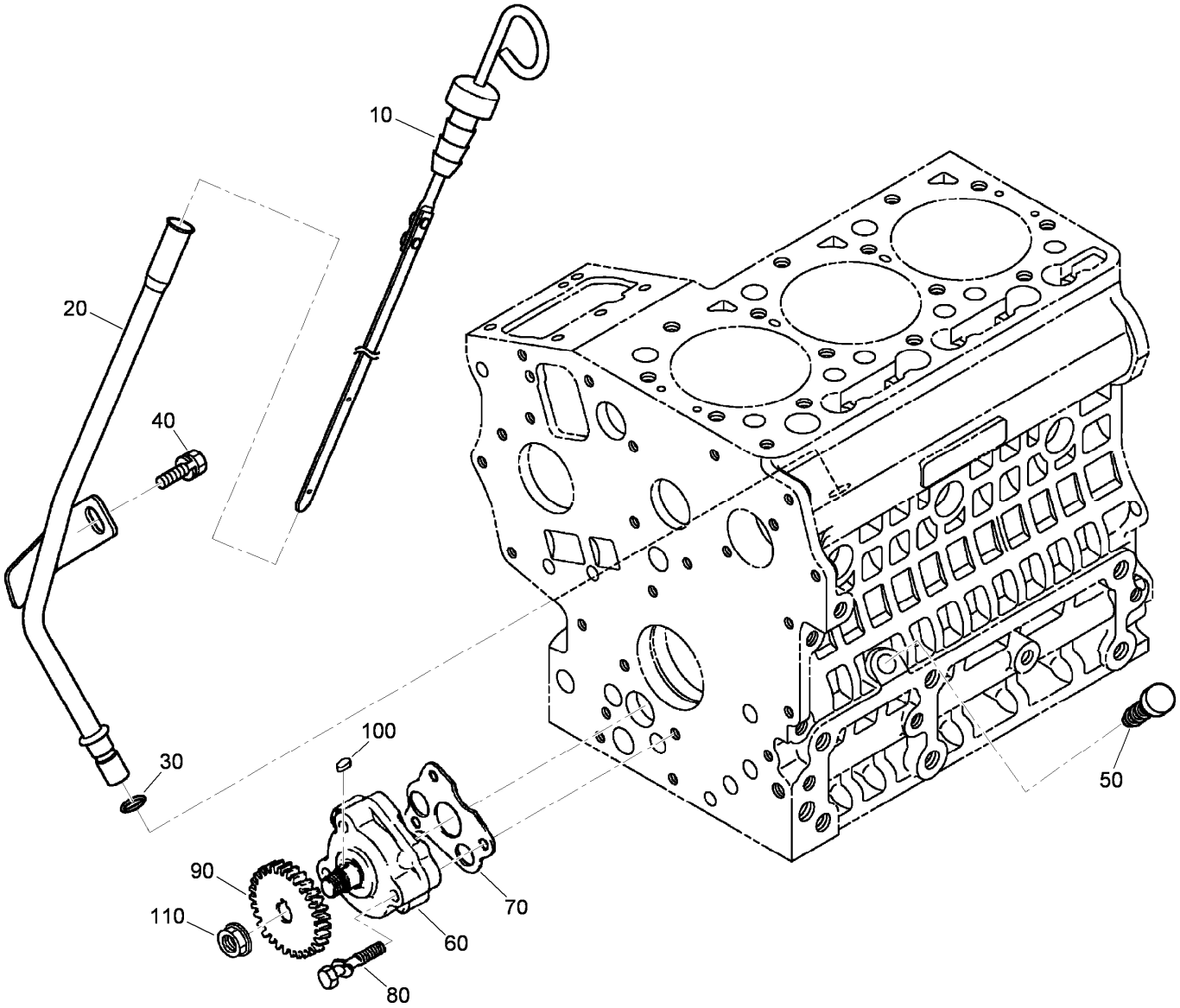


# Dipstick and Guide Assembly

| *Ref.* | *Part Number* | *Qty.* | *Description* |
|---|---|---|---|
| 10 | 120-3124 | 1 | Gauge-Oil |
| 20 | 120-3125 | 1 | Guide-Gauge, Oil |
| 30 | 98-9722 | 1 | O-Ring |
| 40 | 115-8504 | 1 | Bolt-Flange |
| 50 | 110-3720 | 1 | Plug-Gauge, Oil |
| 60 | 100-2002 | 1 | Oil Pump ASM |
| 70 | 100-2003 | 1 | Gasket-Pump, Oil |
| 80 | 100-1923 | 3 | Bolt |
| 90 | 100-1893 | 1 | Gear-Drive, Oil Pump |
| 100 | 98-7658 | 1 | Key-Feather |
| 110 | 100-1779 | 1 | Nut-Flange |

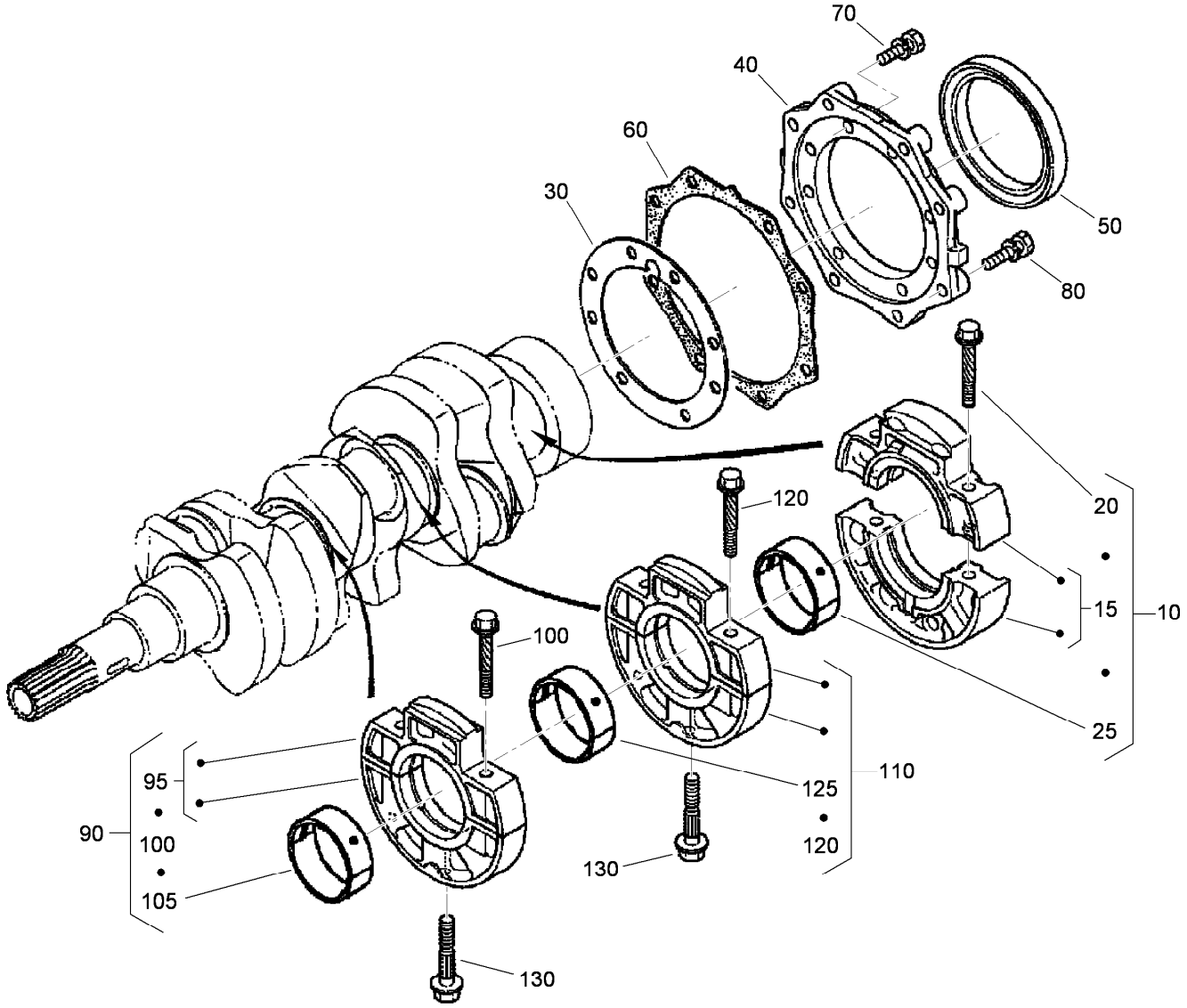


# Main Bearing Case Assembly

| Ref. | Part Number | Qty. | Description |
|---|---|---|---|
| 10 | 112-2494 | 1 | Wheel Case Bearing ASM |
| 15 | 110-3722 | 1 | Main Bearing Case ASM |
| 20 | 110-3723 | 2 | Bolt-Case, Bearing |
| 25 | 110-3744 | 1 | Crankshaft Metal ASM (STD) |
| 30 | 100-1873 | 1 | Gasket-Case, Bearing |
| 40 | 112-8334 | 1 | Cover-Case, Bearing |
| 50 | 110-3724 | 1 | Seal-Oil |
| 60 | 100-1876 | 1 | Gasket-Cover, Case |
| 70 | 98-7568 | 8 | Bolt |
| 80 | 100-1750 | 8 | Bolt |

| Ref. | Part Number | Qty. | Description |
|---|---|---|---|
| 90 | 112-2495 | 1 | Main Case Bearing ASM |
| 95 | 110-3722 | 1 | Main Bearing Case ASM |
| 100 | 110-3723 | 2 | Bolt-Case, Bearing |
| 105 | 110-3741 | 1 | Crankshaft Metal ASM (STD) |
| 110 | 112-2496 | 1 | Main Case Bearing ASM |
| 120 | 110-3723 | 2 | Bolt-Case, Bearing |
| 125 | 110-3741 | 1 | Crankshaft Metal ASM (STD) |
| 130 | 100-1874 | 2 | Bolt-Case, Bearing |

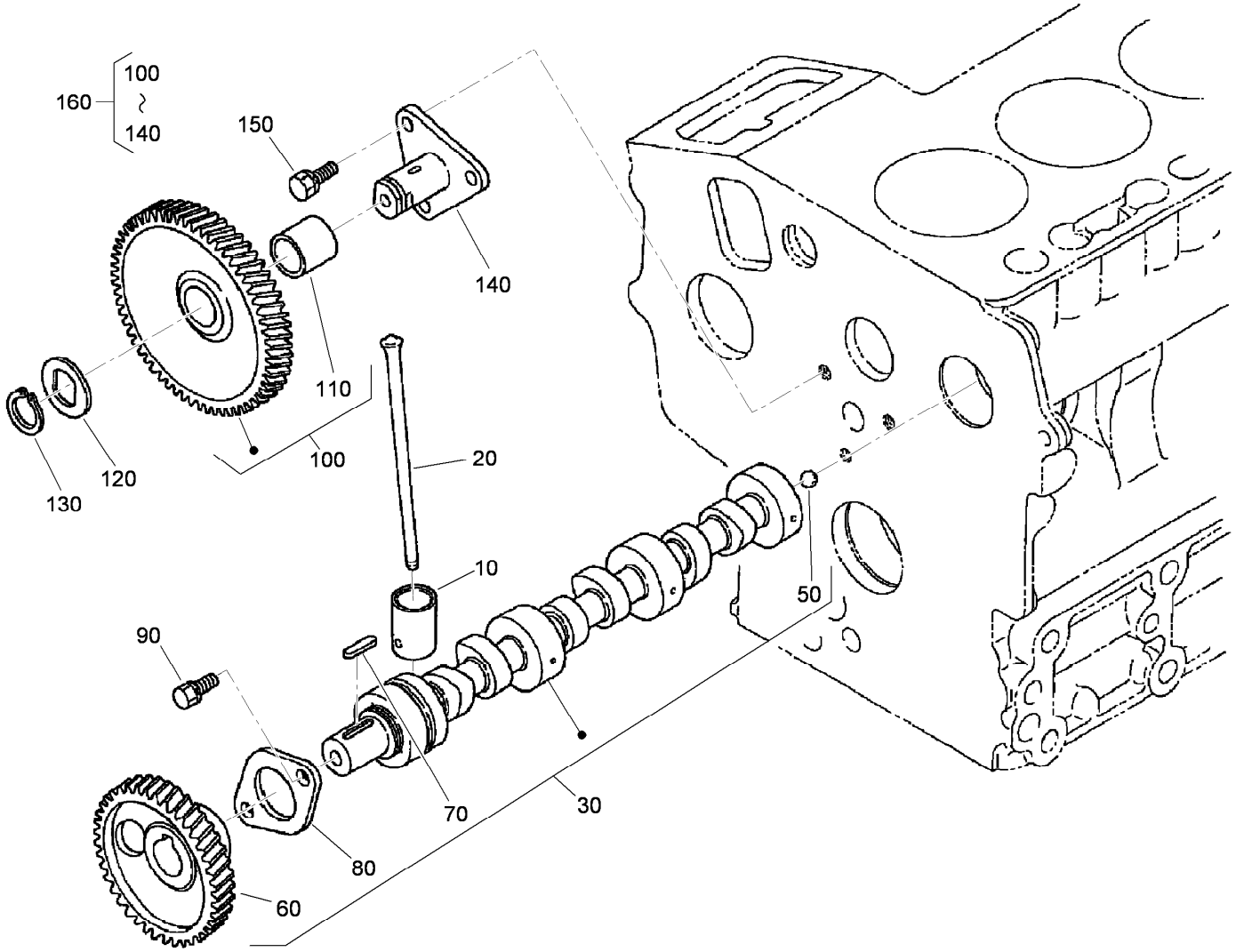


# Cam Shaft and Idle Gear Shaft Assembly

| *Ref.* | *Part Number* | *Qty.* | *Description* |
|---|---|---|---|
| 10 | 110-3727 | 6 | Tappet |
| 20 | 100-1989 | 6 | Rod-Push |
| 30 | 120-3126 | 1 | Camshaft ASM |
| 50 | 110-3729 | 1 | Ball |
| 60 | 100-1889 | 1 | Gear-Camshaft |
| 70 | 98-9378 | 1 | Key-Feather |
| 80 | 100-1887 | 1 | Stopper-Camshaft |
| 90 | 98-9350 | 2 | Bolt |
| 100 | 100-1966 | 1 | Gear-Idle |
| 110 | 100-1968 | 1 | Bushing |
| 120 | 100-1970 | 1 | Collar-Gear, Idle |
| 130 | 100-1969 | 1 | Ring-Snap |
| 140 | 100-1967 | 1 | Shaft-Gear, Idle |
| 150 | 98-9351 | 3 | Bolt |
| 160 | 100-2240 | 1 | Idle Gear ASM |

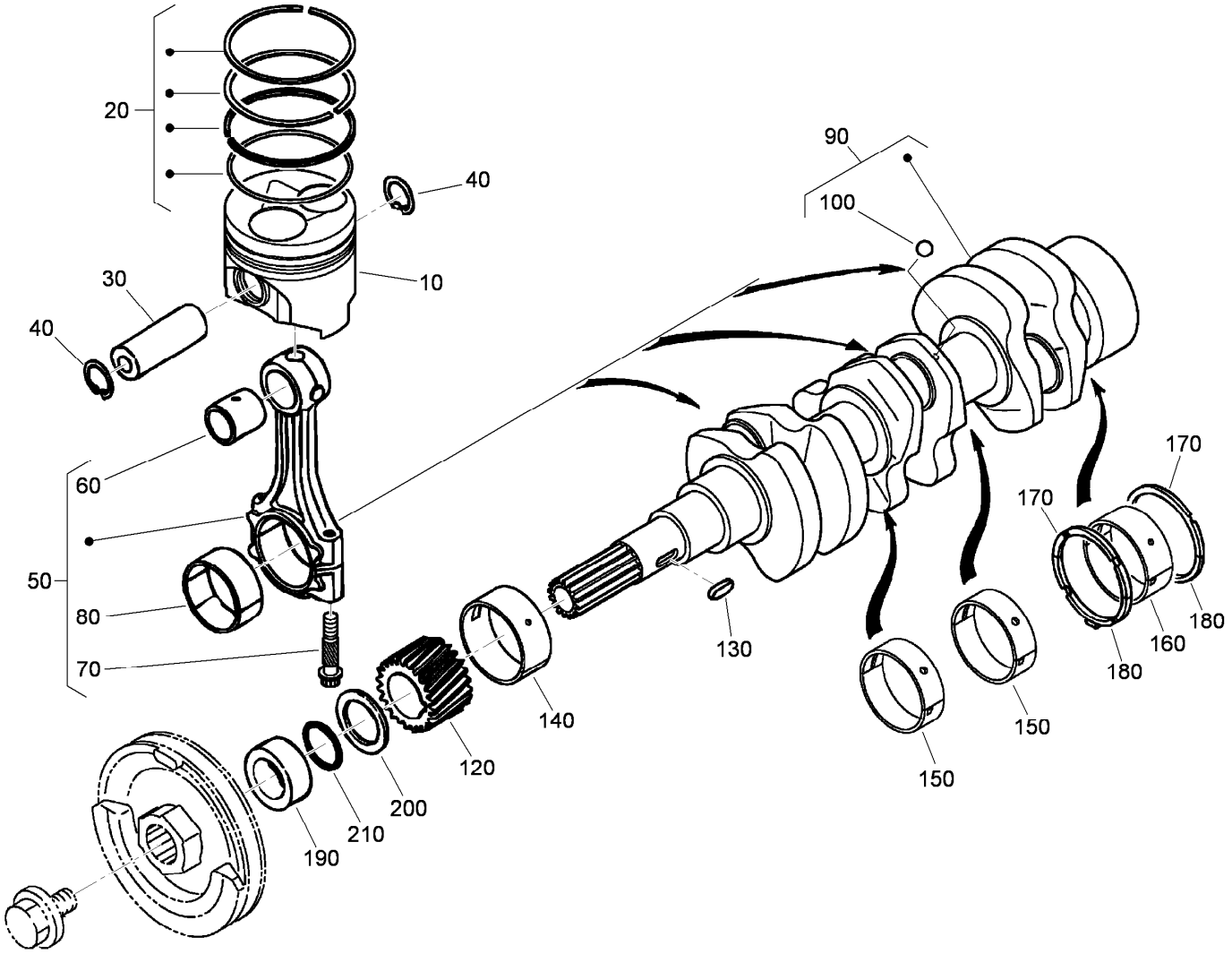


# Piston and Crankshaft Assembly

| Ref. | Part Number | Qty. | Description |
|---|---|---|---|
| 10 | 117-8849 | 3 | Piston STD |
| 10 | 112-8399 | 3 | Piston (+.25MM) |
| 20 | 110-3732 | 3 | Piston Ring ASM (STD) |
| 20 | 110-3733 | 3 | Piston Ring ASM (+.25MM) |
| 30 | 110-3734 | 3 | Pin-Piston |
| 40 | 100-1835 | 6 | Circlip-Internal |
| 50 | 110-3735 | 3 | Connecting Rod ASM |
| 60 | 110-3736 | 3 | Bushing-Pin, Piston |
| 70 | 100-1999 | 6 | Bolt-Rod, Connecting |
| 80 | 100-2000 | 3 | Metal-Crankpin (STD) |
| 80 | 100-1942 | 3 | Metal-Crankpin (-0.20Mm) |
| 80 | 100-1943 | 3 | Metal-Crankpin (-0.40Mm) |
| 90 | 117-0308 | 1 | Crankshaft |
| 100 | 100-1791 | 3 | Ball |
| 120 | 100-1891 | 1 | Gear-Crankshaft |
| 130 | 100-1752 | 1 | Key-Feather |
| 140 | 110-3738 | 1 | Metal-Crankshaft (STD) |
| 140 | 110-3739 | 1 | Metal-Crankshaft (-.0.20MM) |
| 140 | 110-3740 | 1 | Metal-Crankshaft (-0.40MM) |

| Ref. | Part Number | Qty. | Description |
|---|---|---|---|
| 150 | 110-3741 | 2 | Crankshaft Metal ASM (STD) |
| 150 | 110-3742 | 2 | Crankshaft Metal ASM (-0.20MM) |
| 150 | 110-3743 | 2 | Crankshaft Metal ASM (-0.40Mm) |
| 160 | 110-3744 | 1 | Crankshaft Metal ASM (STD) |
| 160 | 110-3745 | 1 | Crankshaft Metal ASM (-0.20MM) |
| 160 | 110-3746 | 1 | Crankshaft Metal ASM (-0.40MM) |
| 170 | 100-1836 | 2 | Metal-Side (STD) |
| 170 | 100-1838 | 2 | Metal-Side (+0.20MM) |
| 170 | 100-1839 | 2 | Metal-Side (+0.40MM) |
| 180 | 117-0309 | 2 | Metal-Side (STD) |
| 180 | 117-0310 | 2 | Metal-Side (+0.20Mm) |
| 180 | 117-0311 | 2 | Metal-Side (+0.40Mm) |
| 190 | 100-1890 | 1 | Collar-Crankshaft |
| 200 | 100-1974 | 1 | Slinger-Oil |
| 210 | 100-2209 | 1 | O-Ring |

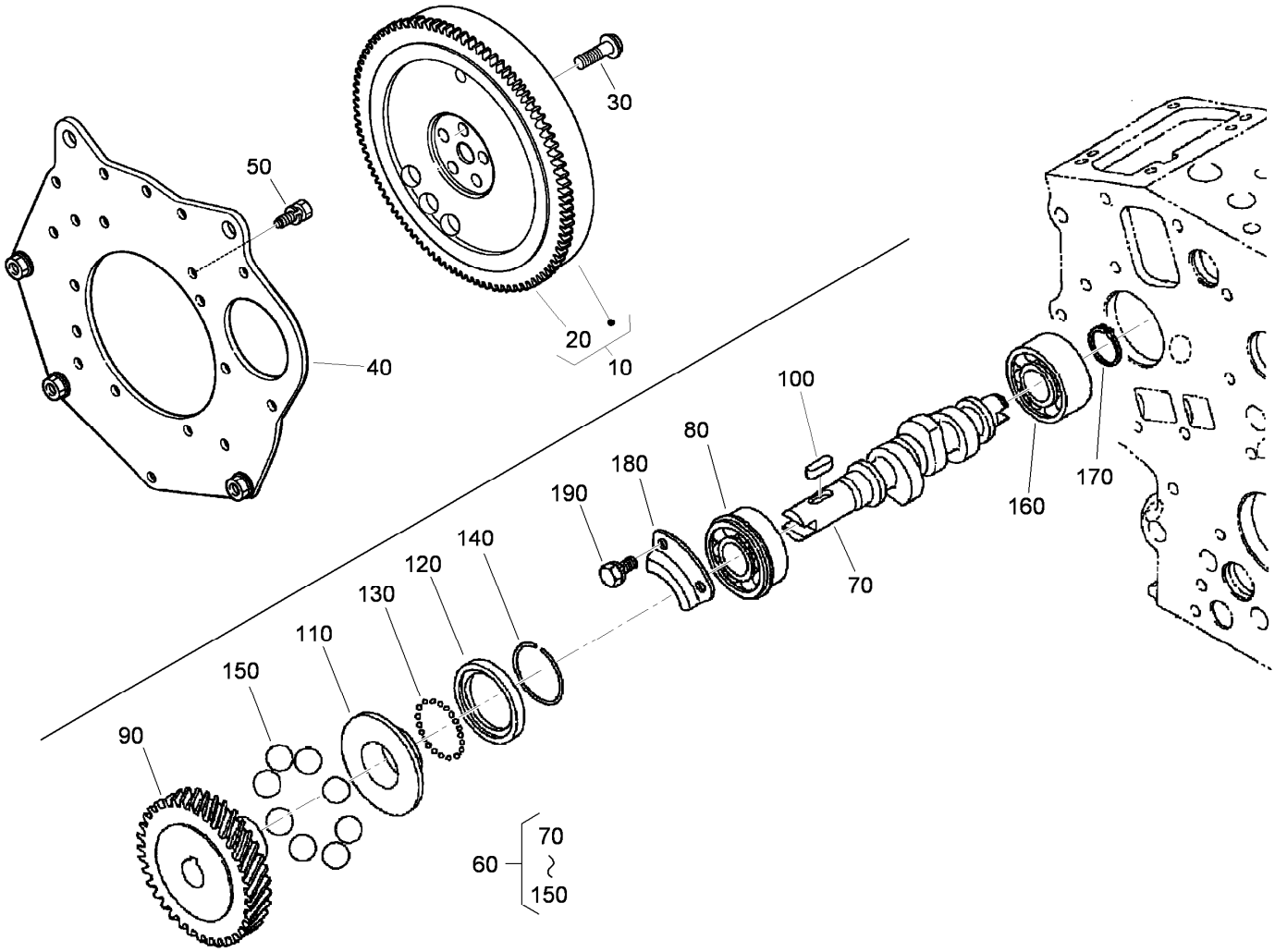


# Flywheel and Fuel Camshaft Assembly

| Ref. | Part Number | Qty. | Description |
|---|---|---|---|
| 10 | 120-3128 | 1 | Flywheel ASM |
| 20 | 120-3129 | 1 | Ring-Gear |
| 30 | 100-1930 | 5 | Bolt-Flywheel |
| 40 | 120-3130 | 1 | Plate-End, Rear |
| 50 | 110-3754 | 10 | Bolt |
| 60 | 112-8335 | 1 | Fuel Camshaft ASM |
| 70 | 112-2818 | 1 | Camshaft-Fuel |
| 80 | 100-1795 | 1 | Bearing-Ball |
| 90 | 100-2006 | 1 | Gear-Pump, Injection |
| 100 | 100-1752 | 1 | Key-Feather |

| Ref. | Part Number | Qty. | Description |
|---|---|---|---|
| 110 | 112-8336 | 1 | Sleeve-Governor |
| 120 | 100-1904 | 1 | Case-Ball, Governor |
| 130 | 100-1790 | 32 | Ball |
| 140 | 100-1843 | 1 | Circ-Clip |
| 150 | 100-1793 | 8 | Ball |
| 160 | 110-3757 | 1 | Bearing-Ball |
| 170 | 100-1784 | 1 | Circ-Clip, External |
| 180 | 100-1888 | 1 | Stopper-Fuel, Camshaft |
| 190 | 98-9350 | 2 | Bolt |

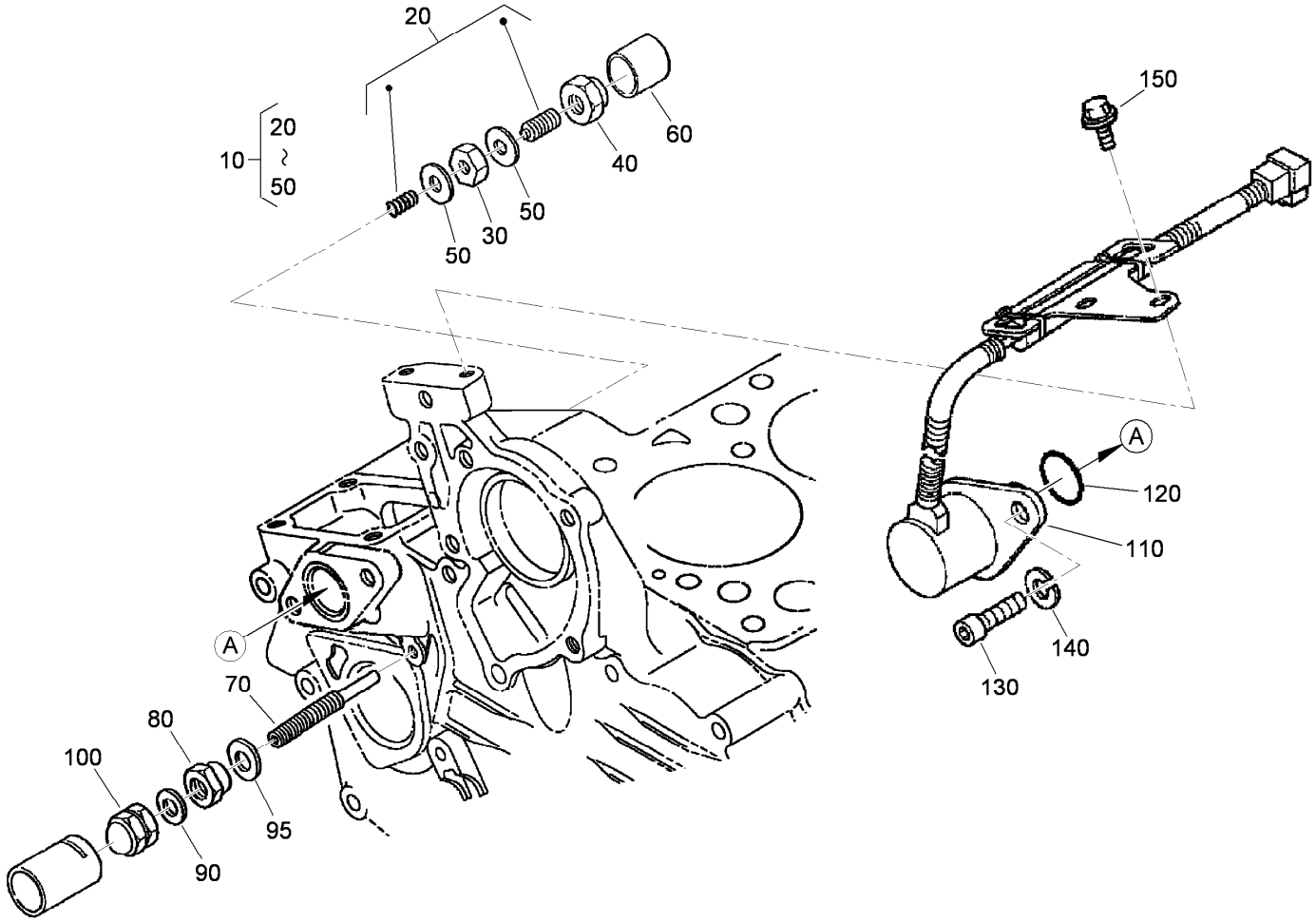


# Idle Apparatus and Stop Solenoid Assembly

| Ref. | Part Number | Qty. | Description |
|---|---|---|---|
| 10 | 100-1898 | 1 | Idle Apparatus ASM |
| 20 | 100-1899 | 1 | Adjusting Bolt ASM |
| 30 | 100-1846 | 1 | Nut |
| 40 | 100-1901 | 1 | Nut-Cap |
| 50 | 98-7428 | 2 | Gasket |
| 60 | 100-1902 | 1 | Cap |
| 70 | 110-3758 | 1 | Bolt-Adjusting |
| 80 | 100-2175 | 1 | Nut-Lock |

| Ref. | Part Number | Qty. | Description |
|---|---|---|---|
| 90 | 98-7654 | 1 | Gasket |
| 95 | 107-9081 | 1 | Gasket |
| 100 | 99-8387 | 1 | Nut-Cap |
| 110 | 117-2719 | 1 | Solenoid Stop ASM |
| 120 | 110-3762 | 1 | O-Ring |
| 130 | 110-3763 | 2 | Bolt-HSH |
| 140 | 98-7699 | 2 | Washer-Spring |
| 150 | 100-1774 | 2 | Bolt-Flange |

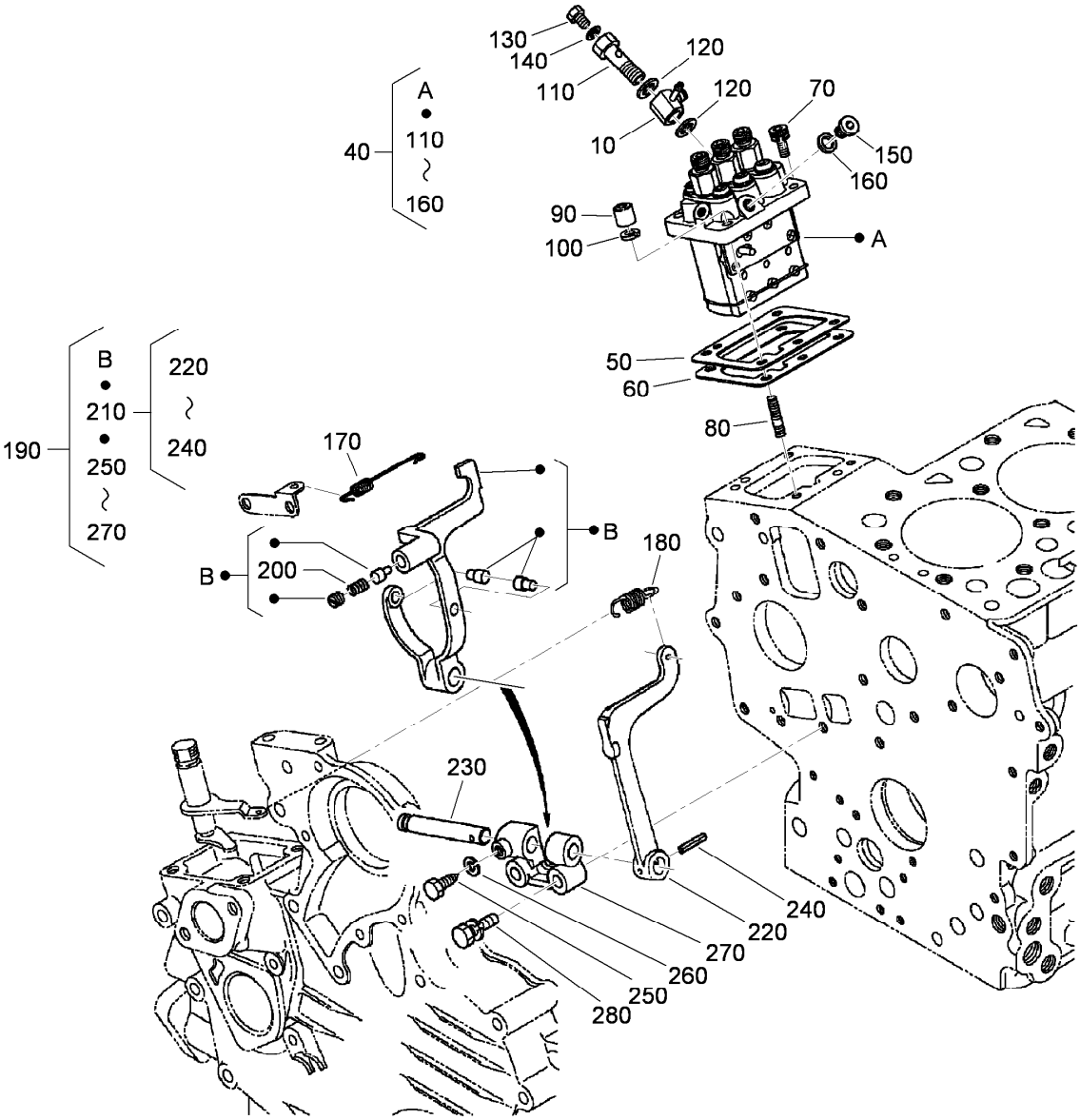


# Injection Pump and Governor Assembly

| Ref. | Part Number | Qty. | Description |
|---|---|---|---|
| 10 | 110-3764 | 1 | Joint |
| 40 | 110-3765 | 1 | Injection Pump ASM |
| 50 | 115-3045 | 1 | Shim-Injection (0.175MM) |
| 50 | 98-9456 | 1 | Shim-Injection (0.20MM) |
| 50 | 98-9457 | 1 | Shim-Injection (0.25MM) |
| 60 | 98-9458 | 1 | Shim-Injection (0.30MM) |
| 60 | 115-3046 | 1 | Shim-Injection (0.35MM) |
| 70 | 98-9361 | 2 | Bolt-HSH |
| 80 | 98-9438 | 2 | Stud |
| 90 | 98-9440 | 2 | Nut-Cap |
| 100 | 98-7699 | 4 | Washer-Spring |
| 110 | 100-1896 | 1 | Screw-Hollow |
| 120 | 98-9445 | 2 | Gasket |
| 130 | 98-9430 | 1 | Screw |
| 140 | 98-9446 | 1 | Gasket |

| Ref. | Part Number | Qty. | Description |
|---|---|---|---|
| 150 | 98-9466 | 1 | Plug |
| 160 | 98-9451 | 1 | Gasket |
| 170 | 110-3766 | 1 | Spring-Start |
| 180 | 110-3767 | 1 | Spring-Governor |
| 190 | 120-3131 | 1 | Fork Lever ASM |
| 200 | 120-3132 | 1 | Spring |
| 210 | 100-1905 | 1 | Fork Lever ASM |
| 220 | 100-1907 | 1 | Lever-Fork |
| 230 | 100-1908 | 1 | Shaft-Lever, Fork |
| 240 | 100-1751 | 1 | Pin-Spring |
| 250 | 100-1845 | 1 | Bolt |
| 260 | 100-2204 | 1 | Washer-Spring |
| 270 | 100-1909 | 1 | Holder-Lever, Fork |
| 280 | 100-1763 | 2 | Bolt |

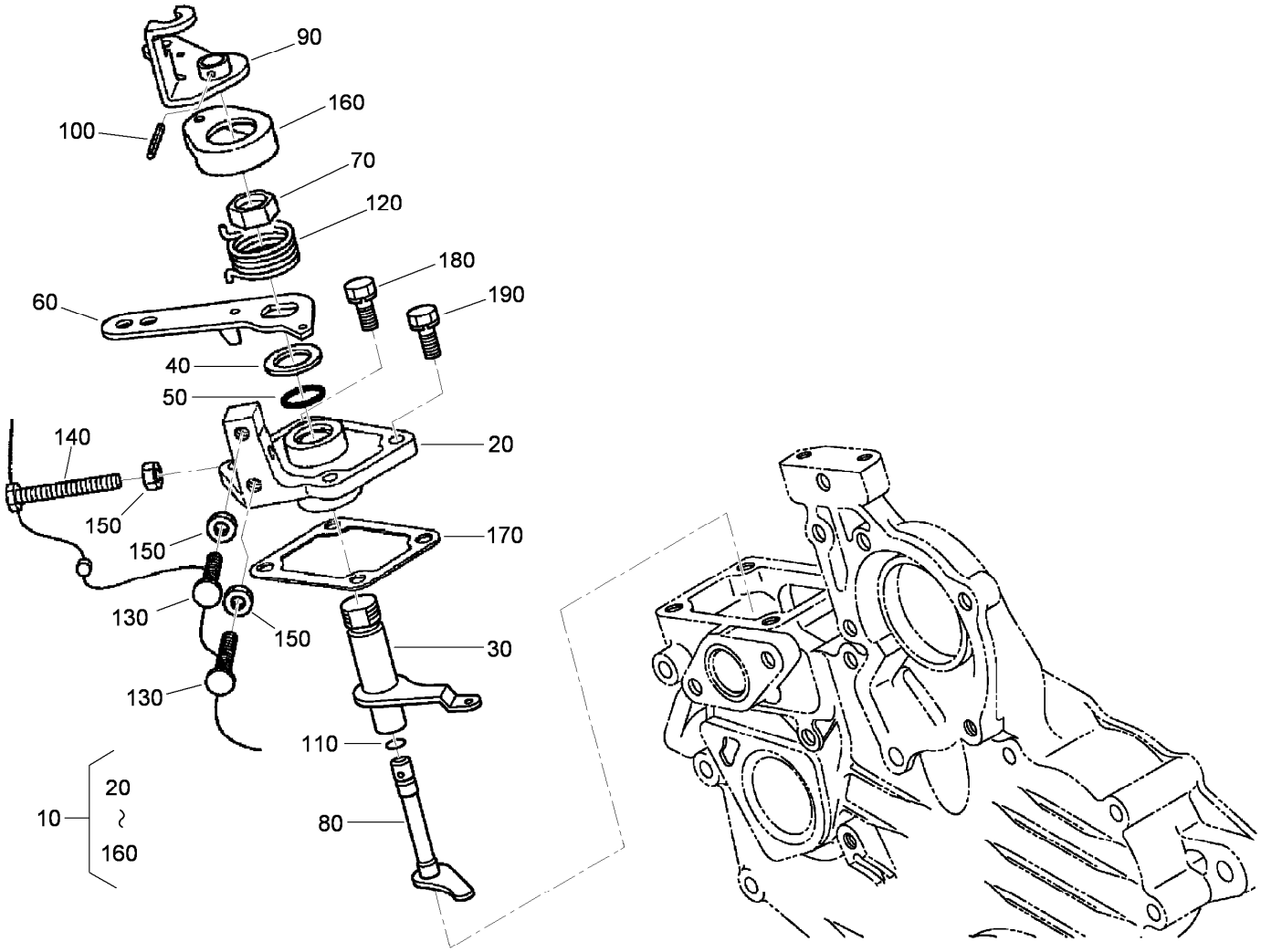


# Speed Control Plate Assembly

| Ref. | Part Number | Qty. | Description |
|---|---|---|---|
| 10 | 110-3769 | 1 | Speed Control Plate ASM |
| 20 | 110-3770 | 1 | Plate-Control, Speed |
| 30 | 110-3771 | 1 | Lever-Governor |
| 40 | 110-3772 | 1 | Collar |
| 50 | 100-2208 | 1 | O-Ring |
| 60 | 110-3773 | 1 | Lever-Control, Speed |
| 70 | 110-3774 | 1 | Nut-Control, Speed |
| 80 | 110-3775 | 1 | Shaft-Lever |
| 90 | 110-3776 | 1 | Lever-Stop, Engine |
| 100 | 110-3777 | 1 | Pin-Spring |

| Ref. | Part Number | Qty. | Description |
|---|---|---|---|
| 110 | 100-2207 | 1 | O-Ring |
| 120 | 110-3778 | 1 | Spring-Return |
| 130 | 120-3133 | 2 | Screw-Stopper |
| 140 | 120-3134 | 1 | Bolt |
| 150 | 98-7572 | 3 | Nut |
| 160 | 110-3779 | 1 | Cap |
| 170 | 100-1962 | 1 | Gasket-Plate, Control |
| 180 | 98-7605 | 2 | Bolt |
| 190 | 112-2507 | 2 | Bolt |

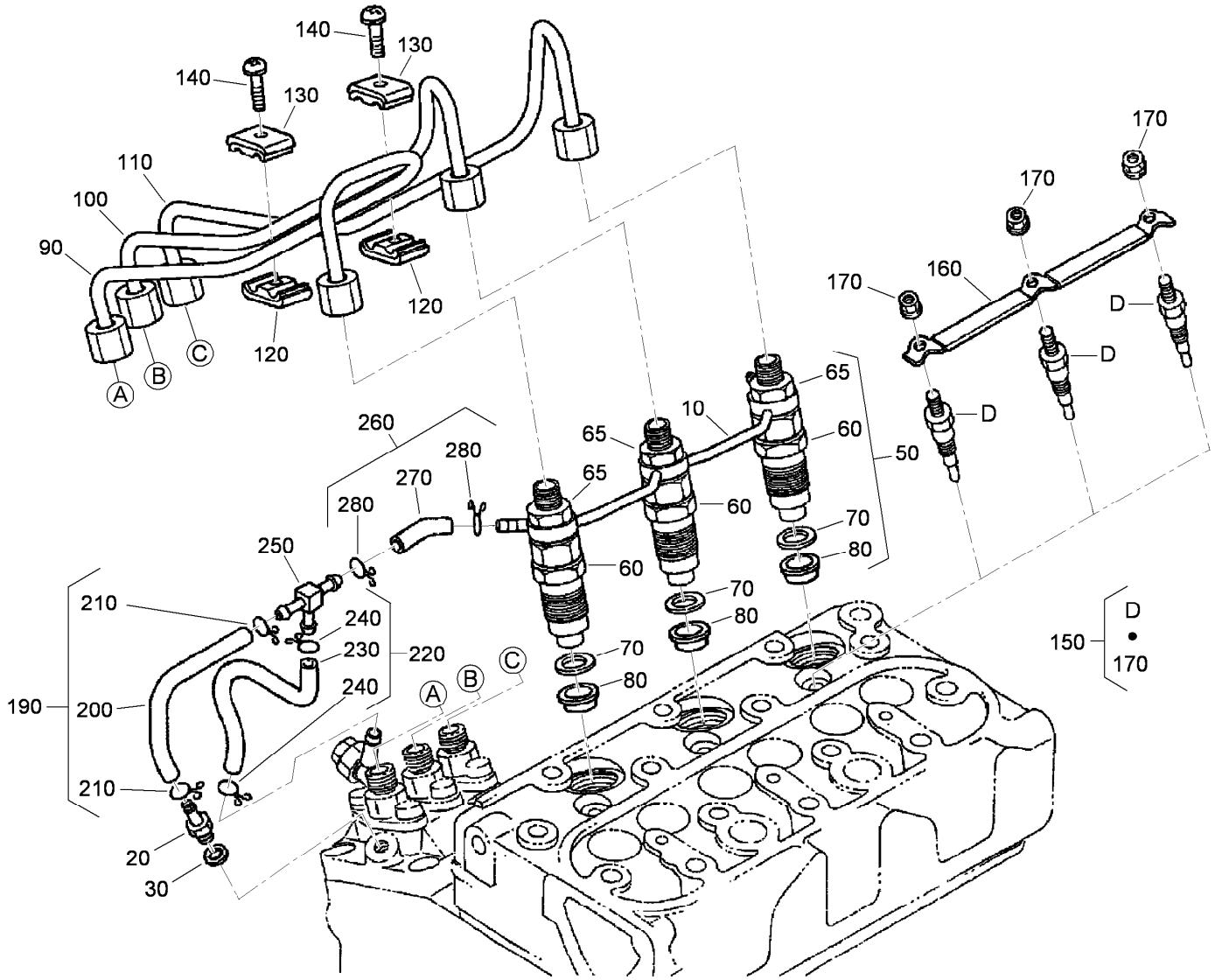


# Nozzle Holder and Glow Plug Assembly

| Ref. | Part Number | Qty. | Description |
|---|---|---|---|
| 10 | 110-3780 | 1 | Over Flow Pipe ASM |
| 20 | 98-9431 | 1 | Screw-Bleeder, Air |
| 30 | 98-7654 | 1 | Gasket |
| 50 | 100-1982 | 3 | Nozzle Holder Kit |
| 60 | 100-1758 | 3 | Nozzle Holder ASM |
| 65 | 98-7613 | 3 | Nut |
| 70 | 98-7676 | 3 | Gasket |
| 80 | 98-7677 | 3 | Seal-Heat |
| 90 | 110-3781 | 1 | Pipe-Injection |
| 100 | 110-3782 | 1 | Pipe-Injection |
| 110 | 110-3783 | 1 | Pipe-Injection |
| 120 | 98-7682 | 2 | Clamp-Pipe |
| 130 | 98-7683 | 2 | Clamp-Pipe |
| 140 | 98-7684 | 2 | Screw (W/Washer) |

| Ref. | Part Number | Qty. | Description |
|---|---|---|---|
| 150 | 100-1854 | 3 | Plug-Glow |
| 160 | 110-3784 | 1 | Cord-Plug, Glow |
| 170 | 99-8377 | 3 | Nut-Flange |
| 190 | 110-3785 | 1 | Fuel Tube ASM |
| 200 | 110-3786 | 1 | Tube-Fuel |
| 210 | 98-7671 | 2 | Clip-Pipe |
| 220 | 110-3787 | 1 | Fuel Tube ASM |
| 230 | 110-3788 | 1 | Tube-Fuel |
| 240 | 98-7671 | 2 | Clip-Pipe |
| 250 | 112-8338 | 1 | Pipe-Joint, T |
| 260 | 110-3790 | 1 | Fuel Tube ASM |
| 270 | 110-3791 | 1 | Tube-Fuel |
| 280 | 98-7671 | 2 | Clip-Pipe |

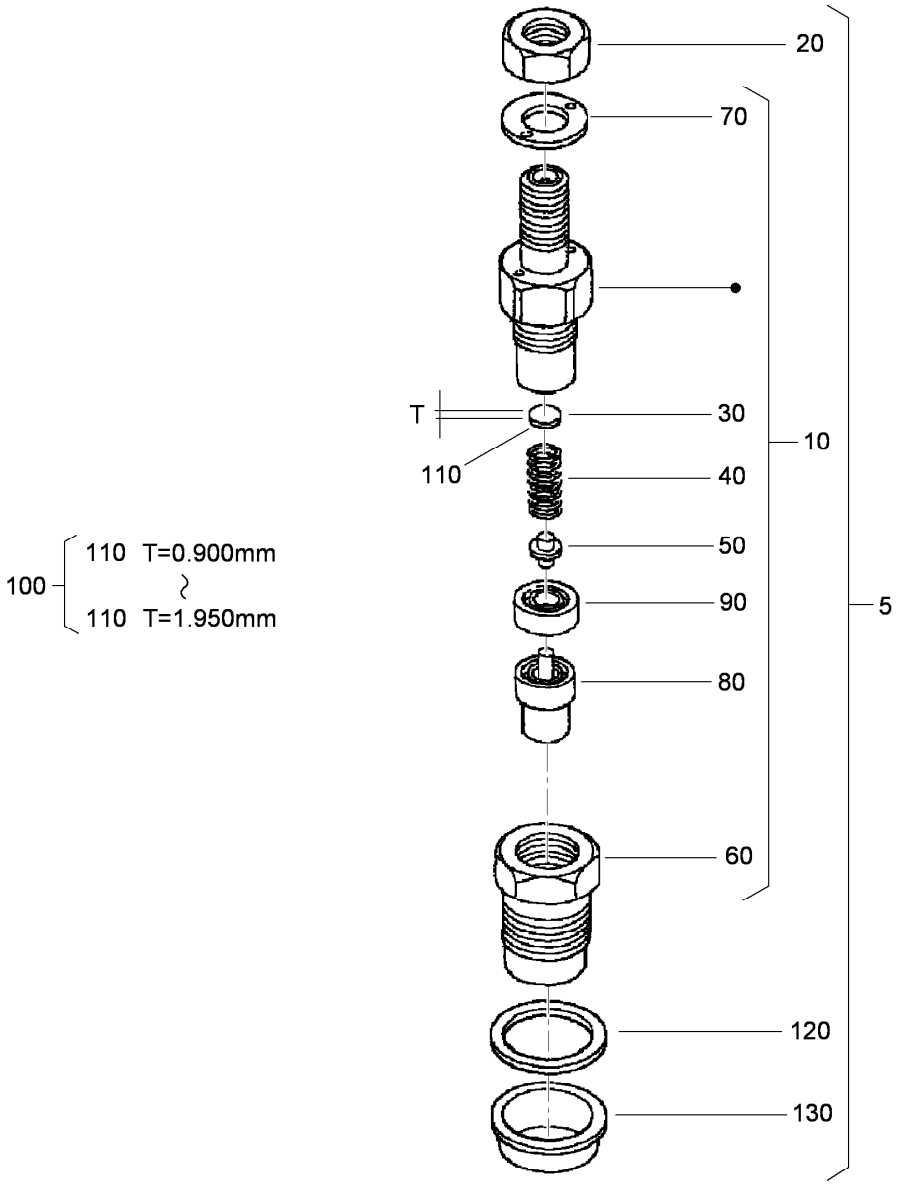


# Nozzle Holder Component Assembly

| Ref. | Part Number | Qty. | Description |
|---|---|---|---|
| 5 | 100-1982 | 3 | Nozzle Holder Kit |
| 10 | 100-1758 | 3 | Nozzle Holder ASM |
| 20 | 98-7613 | 3 | Nut |
| 30 | 98-7642 | 3 | Washer-Adjusting (0.900Mm) |
| 40 | 98-7647 | 3 | Spring-Nozzle |
| 50 | 98-7666 | 3 | Rod-Push |
| 60 | 100-2242 | 3 | Nut-Nozzle |
| 70 | 98-7668 | 3 | Washer |
| 80 | 100-2009 | 3 | Piece-Nozzle |
| 90 | 98-7665 | 3 | Spacer-Distance |
| 100 | 98-9448 | 3 | Adjusting Washer ASM |
| 110 | 98-7642 | 3 | Washer-Adjusting (0.900Mm) |
| 110 | 98-7842 | 3 | Washer-Adjusting (0.950Mm) |
| 110 | 98-7841 | 3 | Washer-Adjusting (0.925Mm) |
| 110 | 98-7843 | 3 | Washer-Adjusting (0.975Mm) |

| Ref. | Part Number | Qty. | Description |
|---|---|---|---|
| 110 | 98-7844 | 3 | Washer-Adjusting (1.000Mm) |
| 110 | 98-7845 | 3 | Washer-Adjusting (1.025Mm) |
| 110 | 98-7846 | 3 | Washer-Adjusting (1.050Mm) |
| 110 | 98-7847 | 3 | Washer-Adjusting (1.075MM) |
| 110 | 98-7848 | 3 | Washer-Adjusting (1.100MM) |
| 110 | 98-7849 | 3 | Washer-Adjusting (1.125MM) |
| 110 | 98-7850 | 3 | Washer-Adjusting (1.150MM) |
| 110 | 98-7851 | 3 | Washer-Adjusting (1.175MM) |
| 110 | 98-7852 | 3 | Washer-Adjusting (1.200MM) |
| 110 | 98-7853 | 3 | Washer-Adjusting (1.225MM) |

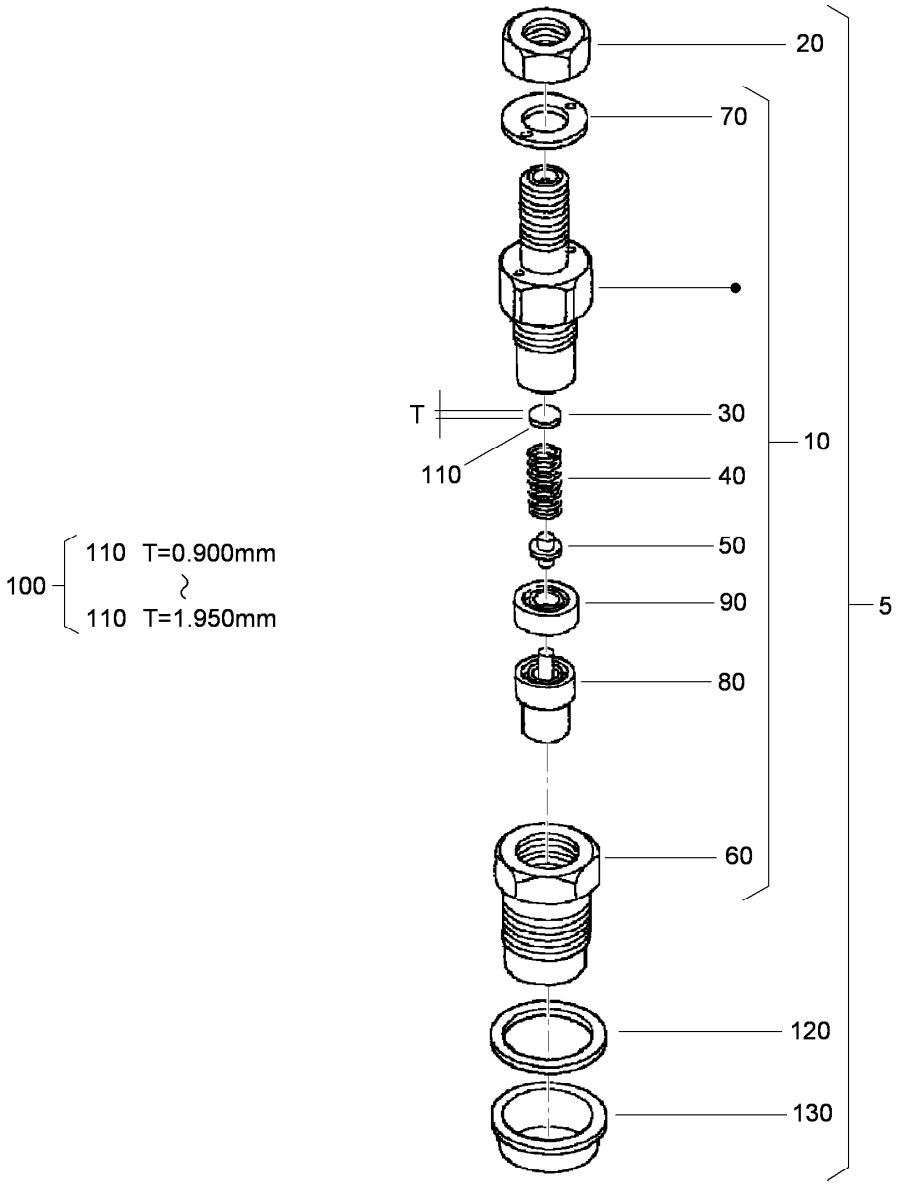


# Nozzle Holder Component Assembly (continued)

| Ref. | Part Number | Qty. | Description |
|---|---|---|---|
| 110 | 98-7854 | 3 | Washer-Adjusting (1.250MM) |
| 110 | 98-7855 | 3 | Washer-Adjusting (1.275MM) |
| 110 | 98-7856 | 3 | Washer-Adjusting 1.300MM) |
| 110 | 98-7857 | 3 | Washer-Adjusting (1.325MM) |
| 110 | 98-7858 | 3 | Washer-Adjusting (1.350MM) |
| 110 | 98-7859 | 3 | Washer-Adjusting (1.375MM) |
| 110 | 98-7860 | 3 | Washer-Adjusting (1.400MM) |
| 110 | 98-7861 | 3 | Washer-Adjusting (1.425MM) |
| 110 | 98-7862 | 3 | Washer-Adjusting (1.450MM) |
| 110 | 98-7863 | 3 | Washer-Adjusting (1.475MM) |

| Ref. | Part Number | Qty. | Description |
|---|---|---|---|
| 110 | 98-7864 | 3 | Washer-Adjusting (1.500MM) |
| 110 | 98-7865 | 3 | Washer-Adjusting (1.525MM) |
| 110 | 98-7866 | 3 | Washer-Adjusting (1.550MM) |
| 110 | 98-7867 | 3 | Washer-Adjusting (1.575MM) |
| 110 | 98-7868 | 3 | Washer-Adjusting (1.600MM) |
| 110 | 98-7869 | 3 | Washer-Adjusting (1.625MM) |
| 110 | 98-7870 | 3 | Washer-Adjusting (1.650MM) |
| 110 | 98-7871 | 3 | Washer-Adjusting (1.675MM) |
| 110 | 98-7872 | 3 | Washer-Adjusting (1.700MM) |
| 110 | 98-7873 | 3 | Washer-Adjusting (1.725MM) |

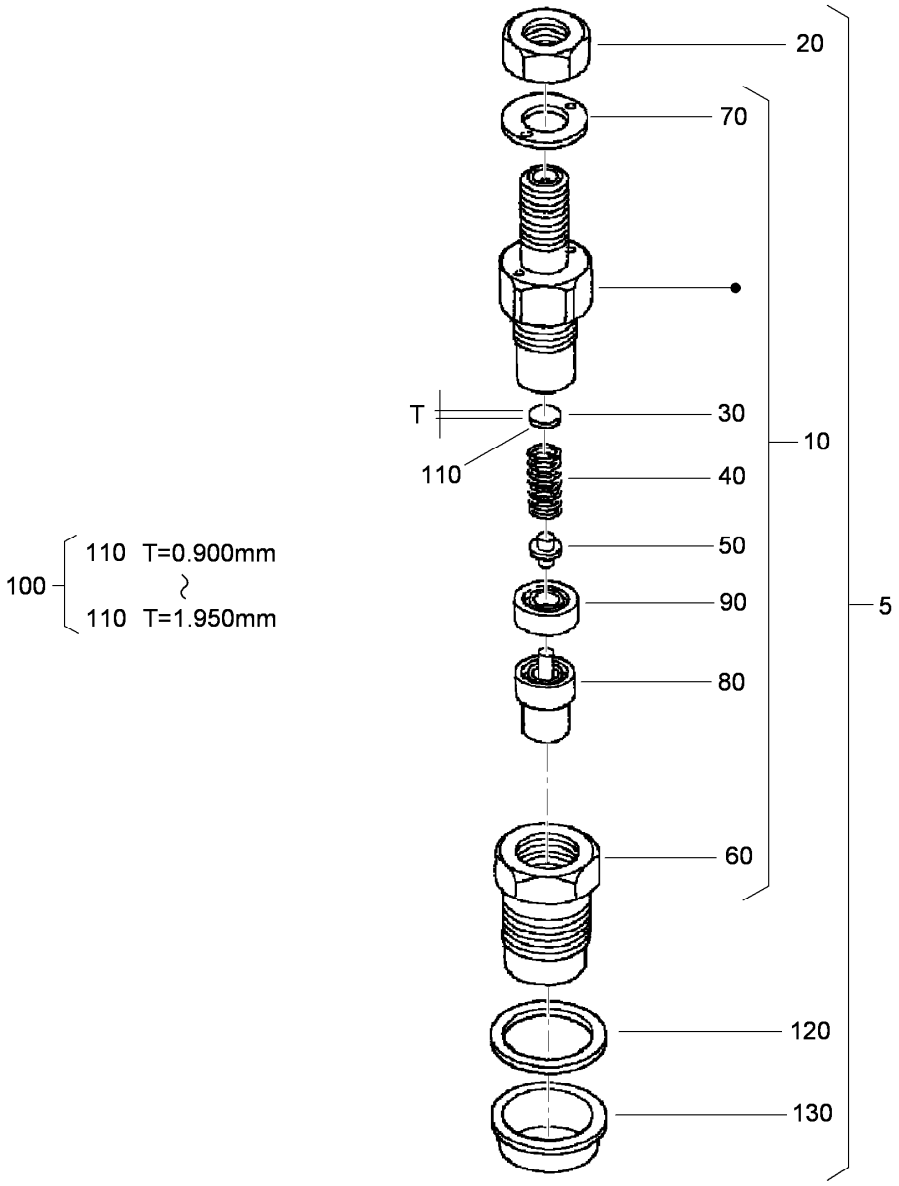


# Nozzle Holder Component Assembly (continued)

| Ref. | Part Number | Qty. | Description |
|---|---|---|---|
| 110 | 98-7874 | 3 | Washer-Adjusting (1.750MM) |
| 110 | 98-7875 | 3 | Washer-Adjusting (1.775MM) |
| 110 | 98-7876 | 3 | Washer-Adjusting (1.800MM) |
| 110 | 98-7877 | 3 | Washer-Adjusting (1.825MM) |
| 110 | 98-7878 | 3 | Washer-Adjusting (1.850MM) |

| Ref. | Part Number | Qty. | Description |
|---|---|---|---|
| 110 | 98-7879 | 3 | Washer-Adjusting (1.875MM) |
| 110 | 98-7880 | 3 | Washer-Adjusting (1.900MM) |
| 110 | 98-7881 | 3 | Washer-Adjusting (1.925MM) |
| 110 | 98-7882 | 3 | Washer-Adjusting (1.950MM) |
| 120 | 98-7676 | 3 | Gasket |
| 130 | 98-7677 | 3 | Seal-Heat |

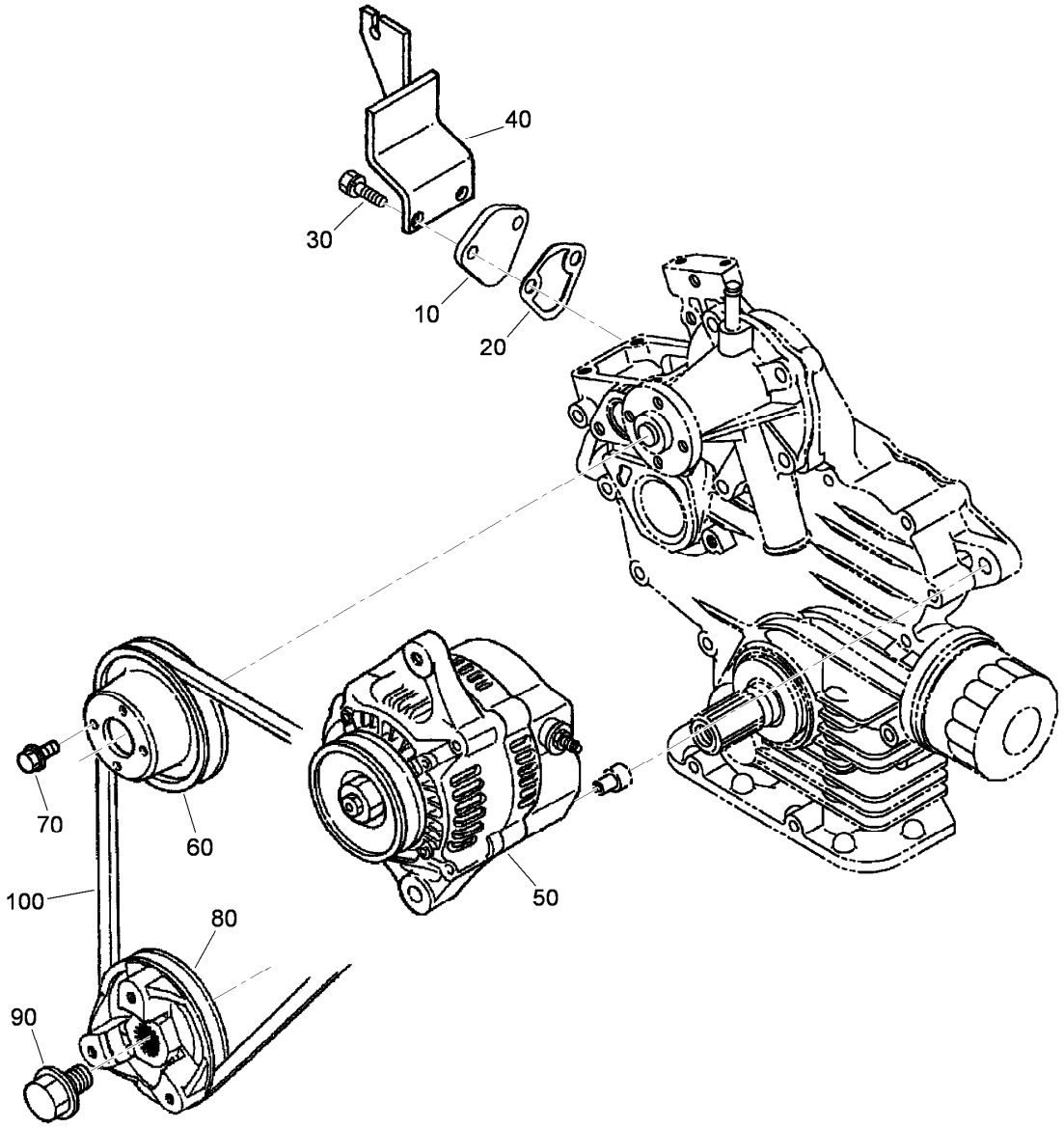


# Alternator and Pulley and Fuel Pump Cover Assembly

| *Ref.* | *Part Number* | *Qty.* | *Description* |
|---|---|---|---|
| 10 | 99-3514 | 1 | Cover |
| 20 | 98-9636 | 1 | Gasket-Pump, Fuel |
| 30 | 98-7605 | 2 | Bolt |
| 40 | 120-3135 | 1 | Clamp-Wire |
| 50 | 117-5541 | 1 | 60 Amp Alternator ASM |
| 60 | 100-1921 | 1 | Pulley-Fan |
| 70 | 99-8363 | 4 | Bolt-Flange |
| 80 | 112-2510 | 1 | Pulley-Drive, Fan |
| 90 | 100-1978 | 1 | Bolt |
| 100 | 119-4486 | 1 | Belt-V, Fan |

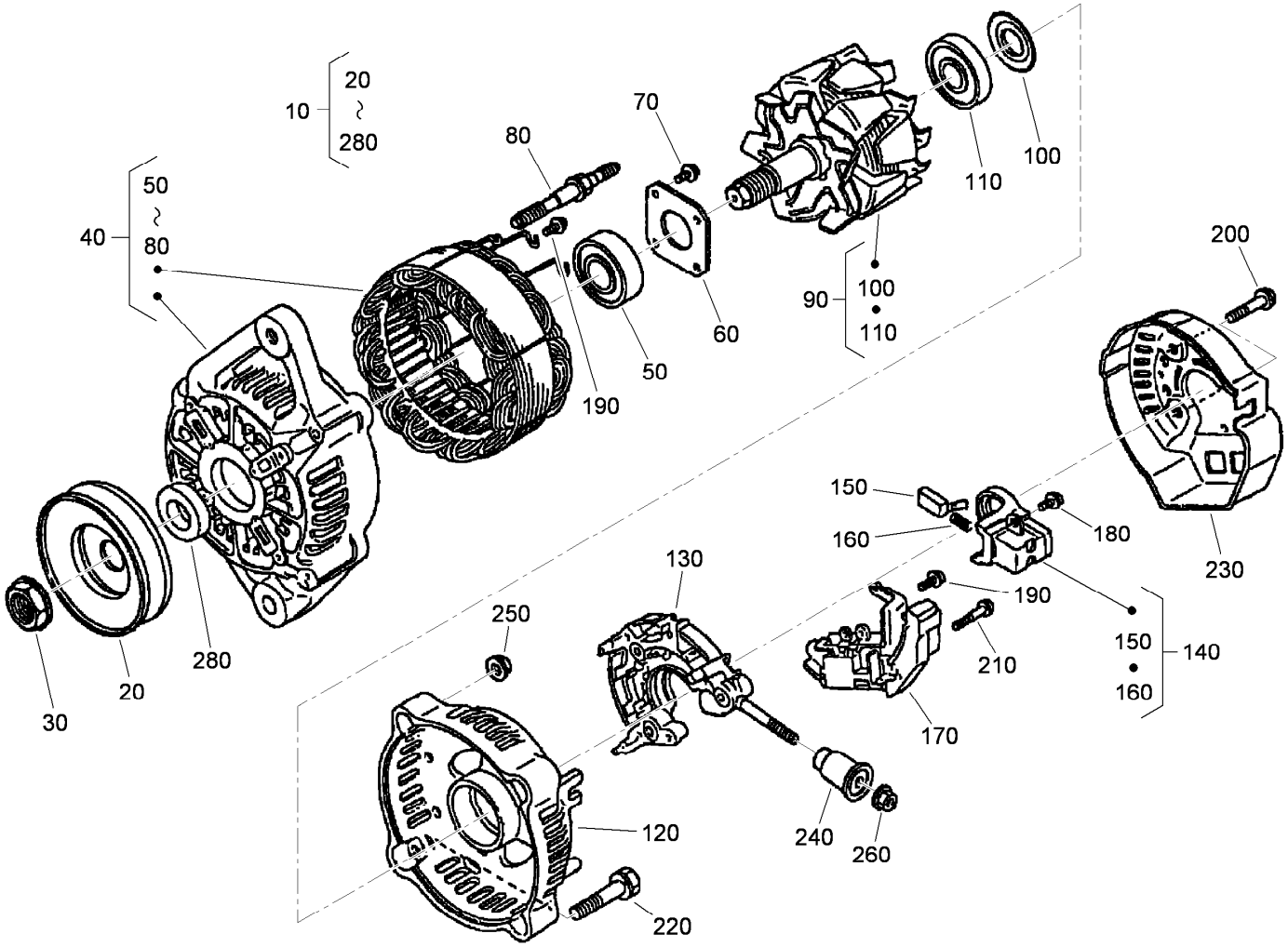


# Alternator Components

| Ref. | Part Number | Qty. | Description |
|---|---|---|---|
| 10 | 117-5541 | 1 | 60 Amp Alternator ASM |
| 20 | 98-9453 | 1 | Pulley-Dynamo |
| 30 | 98-7708 | 1 | Nut |
| 40 | 117-0316 | 1 | Drive End Frame ASM |
| 50 | 107-0137 | 1 | Bearing-Ball |
| 60 | 98-7715 | 1 | Plate-Retainer |
| 70 | 98-7716 | 4 | Screw-Head, Round |
| 80 | 98-7717 | 2 | Bolt-Through |
| 90 | 117-0317 | 1 | Rotor ASM |
| 100 | 98-7711 | 1 | Cover-Bearing |
| 110 | 107-0138 | 1 | Bearing-Ball |
| 120 | 117-0318 | 1 | *obs* Frame-End |
| 130 | 117-0322 | 1 | Holder |
| 140 | 107-0141 | 1 | Brush Holder ASM |

| Ref. | Part Number | Qty. | Description |
|---|---|---|---|
| 150 | 98-7724 | 2 | Brush |
| 160 | 98-7725 | 2 | Spring-Brush |
| 170 | 117-0319 | 1 | Regulator ASM |
| 180 | 98-7727 | 1 | Screw-Head, Round |
| 190 | 98-7728 | 6 | Screw-Head, Round |
| 200 | 98-7729 | 3 | Bolt |
| 210 | 98-7726 | 2 | Screw-Head, Round |
| 220 | 98-7731 | 2 | Bolt |
| 230 | 117-0320 | 1 | Cover-End |
| 240 | 117-0321 | 1 | Insulation-Brush |
| 250 | 98-7730 | 2 | Nut |
| 260 | 98-7732 | 1 | Nut |
| 280 | 98-7709 | 1 | Collar |

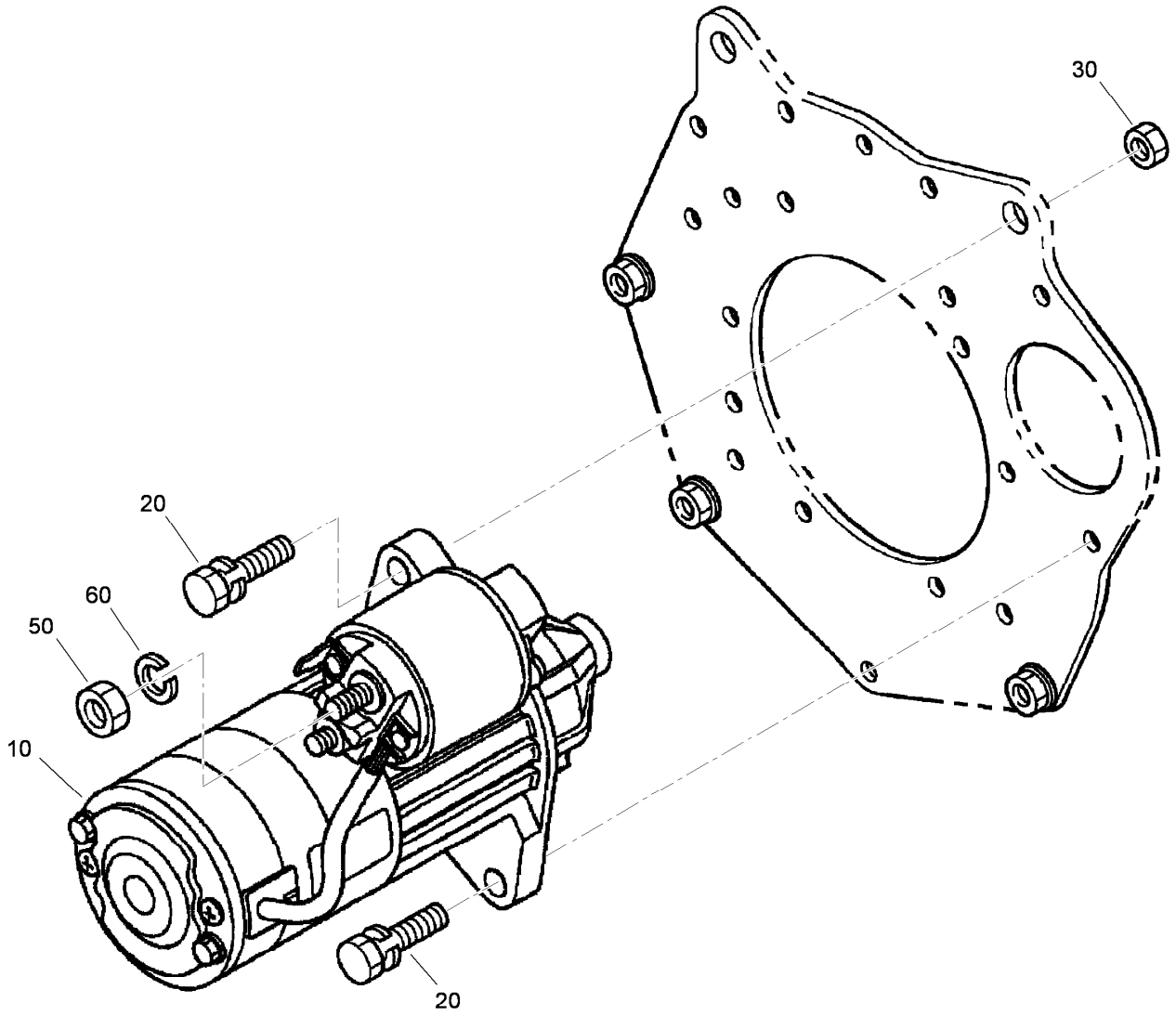


# Starter Installation Assembly

| *Ref.* | *Part Number* | *Qty.* | *Description* |
|---|---|---|---|
| 10 | 110-3800 | 1 | Starter ASM |
| 20 | 98-7697 | 2 | Bolt |
| 30 | 98-7534 | 2 | Nut |
| 50 | 98-7534 | 1 | Nut |
| 60 | 105-2893 | 1 | Washer-Spring |

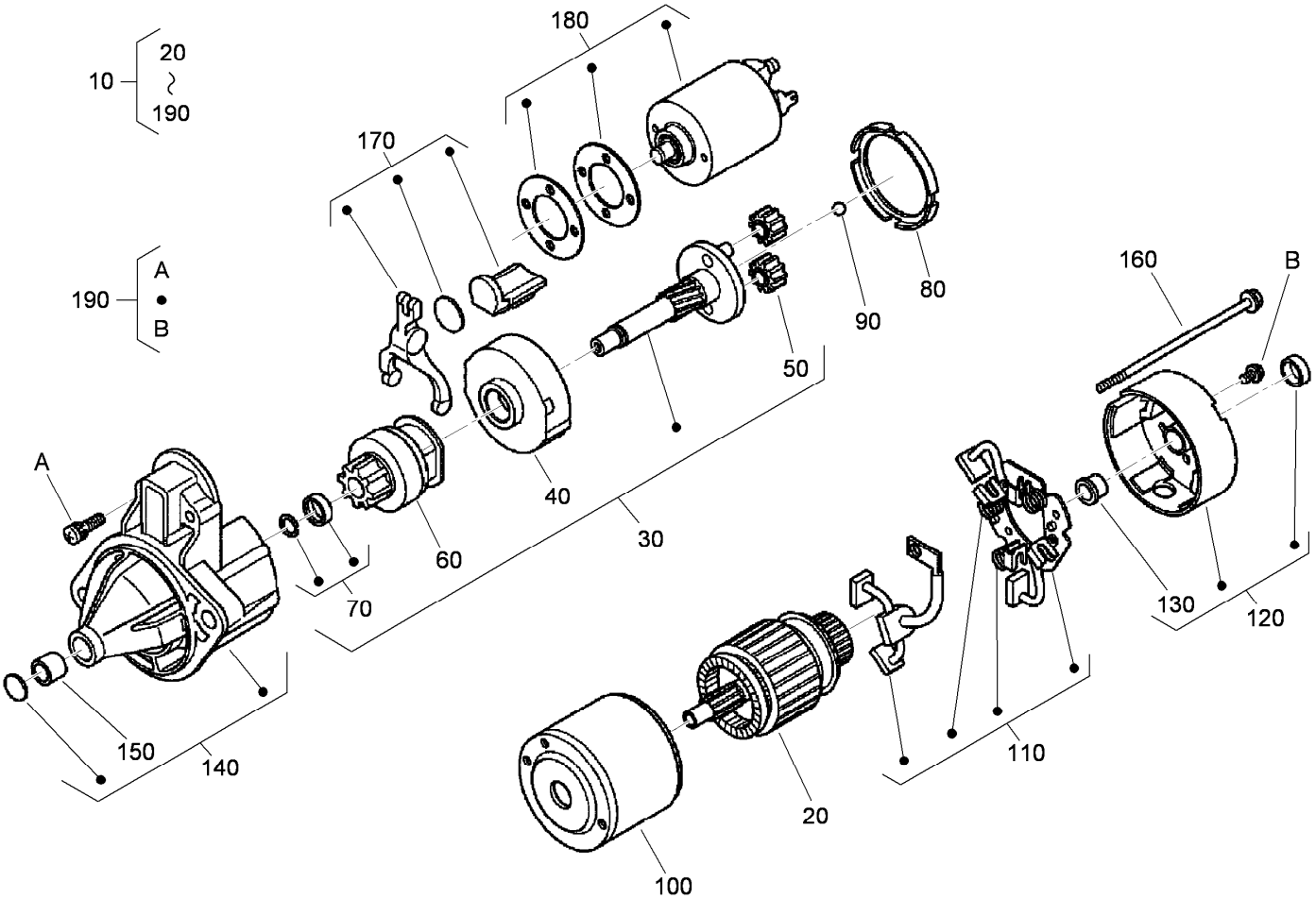


# Starter Assembly No. 110-3800

| Ref. | Part Number | Qty. | Description |
|---|---|---|---|
| 10 | 110-3800 | 1 | Starter ASM |
| 20 | 110-3801 | 1 | Armature |
| 30 | 110-3802 | 1 | Shaft ASM |
| 40 | 120-3142 | 1 | Gear-Internal |
| 50 | 110-3804 | 3 | Gear-Planetary |
| 60 | 110-3805 | 1 | Clutch-Running, Over |
| 70 | 110-3806 | 1 | Stopper |
| 80 | 120-3143 | 1 | Gasket |
| 90 | 110-3808 | 1 | Ball |
| 100 | 110-3809 | 1 | Yoke |

| Ref. | Part Number | Qty. | Description |
|---|---|---|---|
| 110 | 110-3810 | 1 | Brush Holder ASM |
| 120 | 110-3811 | 1 | Rear Bracket ASM |
| 130 | 110-3812 | 1 | Bushing |
| 140 | 110-3813 | 1 | Front Bracket ASM |
| 150 | 110-3814 | 1 | Bushing |
| 160 | 110-3815 | 2 | Bolt |
| 170 | 110-3816 | 1 | Fork Lever ASM |
| 180 | 110-3817 | 1 | Magnetic Switch ASM |
| 190 | 110-3818 | 1 | Screws (Set Of 4) |

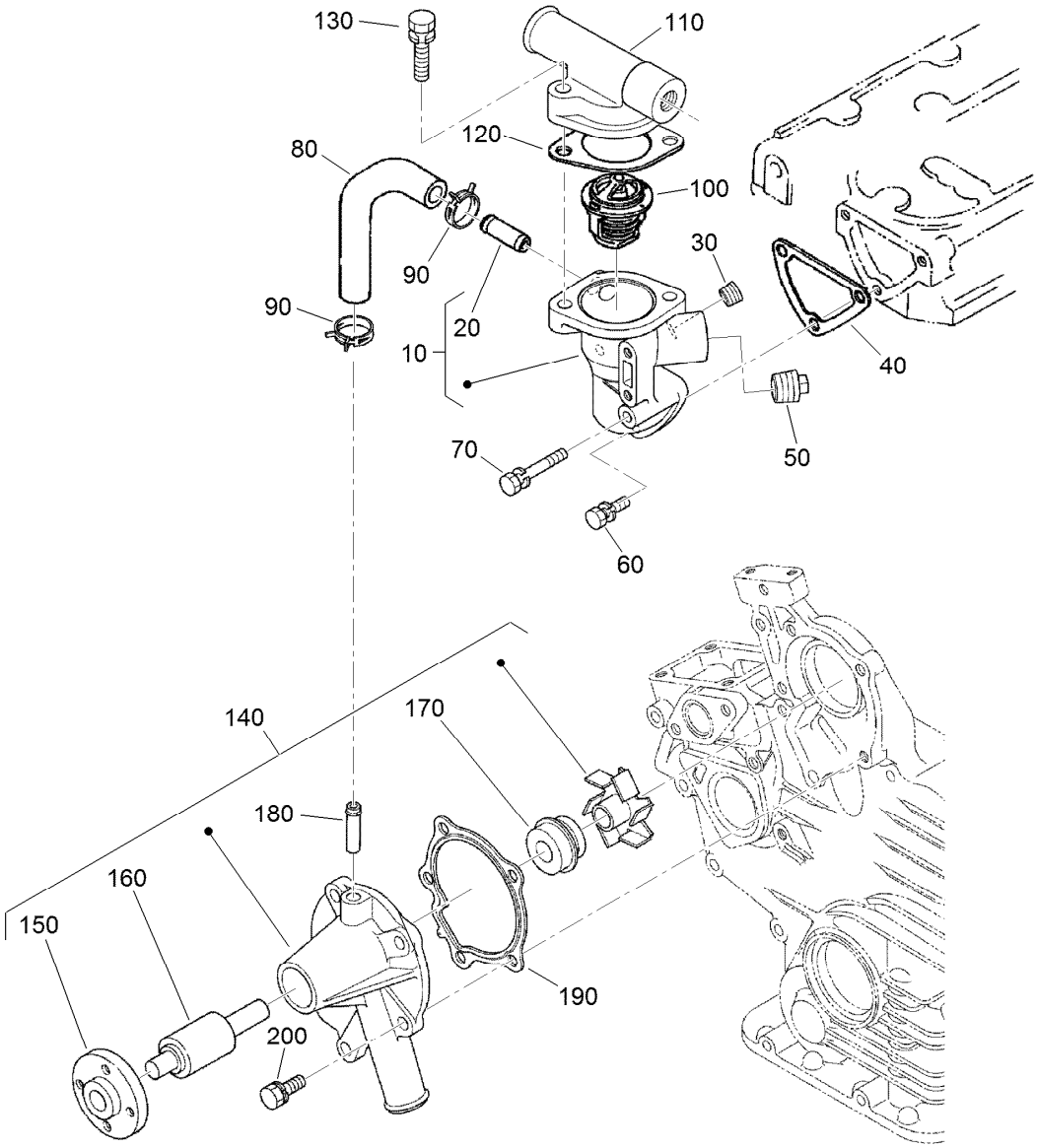


# Water Flange, Thermostat and Water Pump Assembly

| Ref. | Part Number | Qty. | Description |
|---|---|---|---|
| 10 | 110-3819 | 1 | Water Flange ASM |
| 20 | 98-9580 | 1 | Pipe-Return, Water |
| 30 | 98-9444 | 1 | Plug |
| 40 | 110-3820 | 1 | Gasket-Flange, Water |
| 50 | 110-3821 | 1 | Plug |
| 60 | 98-7692 | 2 | Bolt |
| 70 | 105-3797 | 1 | Bolt |
| 80 | 110-3822 | 1 | Pipe-Return, Water |
| 90 | 98-9579 | 2 | Band-Pipe |
| 100 | 98-7778 | 1 | Thermostat ASM |

| Ref. | Part Number | Qty. | Description |
|---|---|---|---|
| 110 | 120-7575 | 1 | Cover-Thermostat |
| 120 | 105-3748 | 1 | Gasket-Thermostat |
| 130 | 98-7777 | 2 | Bolt |
| 140 | 110-3824 | 1 | Water Pump ASM |
| 150 | 100-1933 | 1 | Flange-Pump, Water |
| 160 | 100-1934 | 1 | Bearing-Ball |
| 170 | 99-3518 | 1 | Water Pump Seal ASM |
| 180 | 100-1932 | 1 | Pipe-Return, Water |
| 190 | 117-0330 | 1 | Gasket-Pump, Water |
| 200 | 100-1750 | 4 | Bolt |

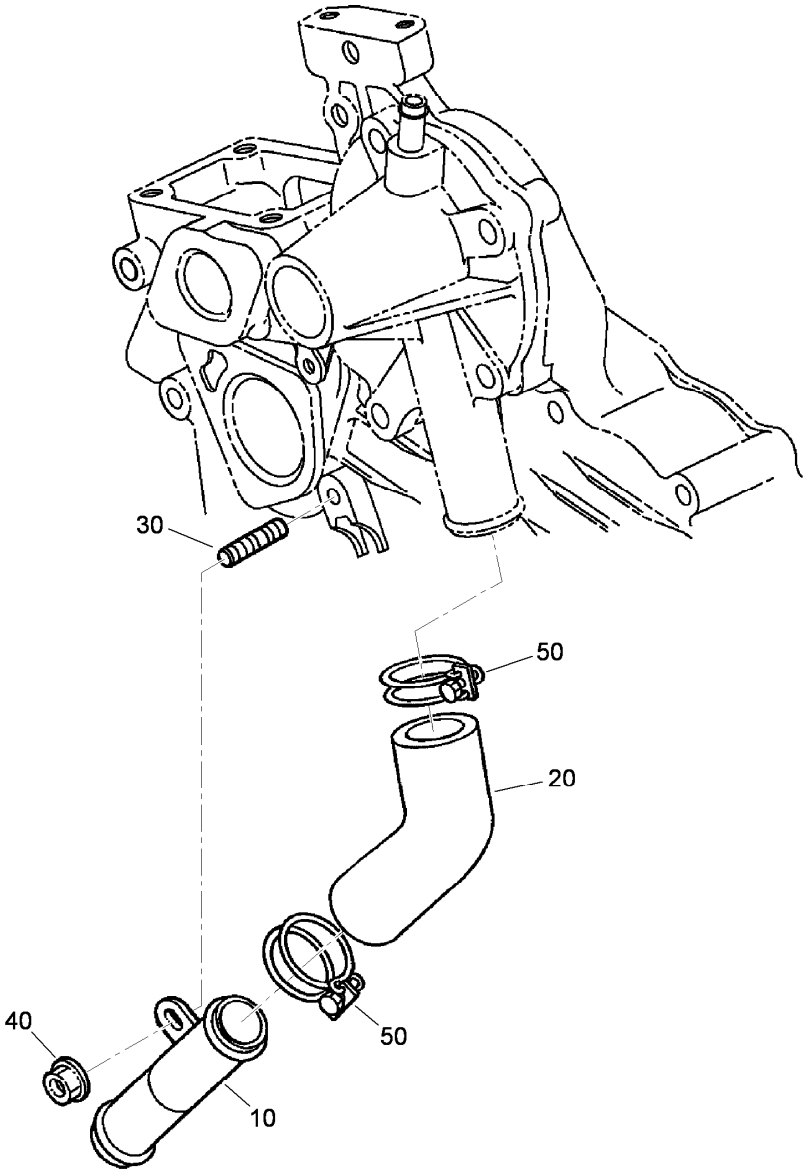


# Water Pipe Assembly

| Ref. | Part Number | Qty. | Description |
|---|---|---|---|
| 10 | 100-1918 | 1 | Pipe-Water |
| 20 | 110-3827 | 1 | Pipe-Water |
| 30 | 100-1924 | 1 | Stud |
| 40 | 100-2203 | 1 | Nut-Flange |
| 50 | 110-3828 | 2 | Band-Pipe |

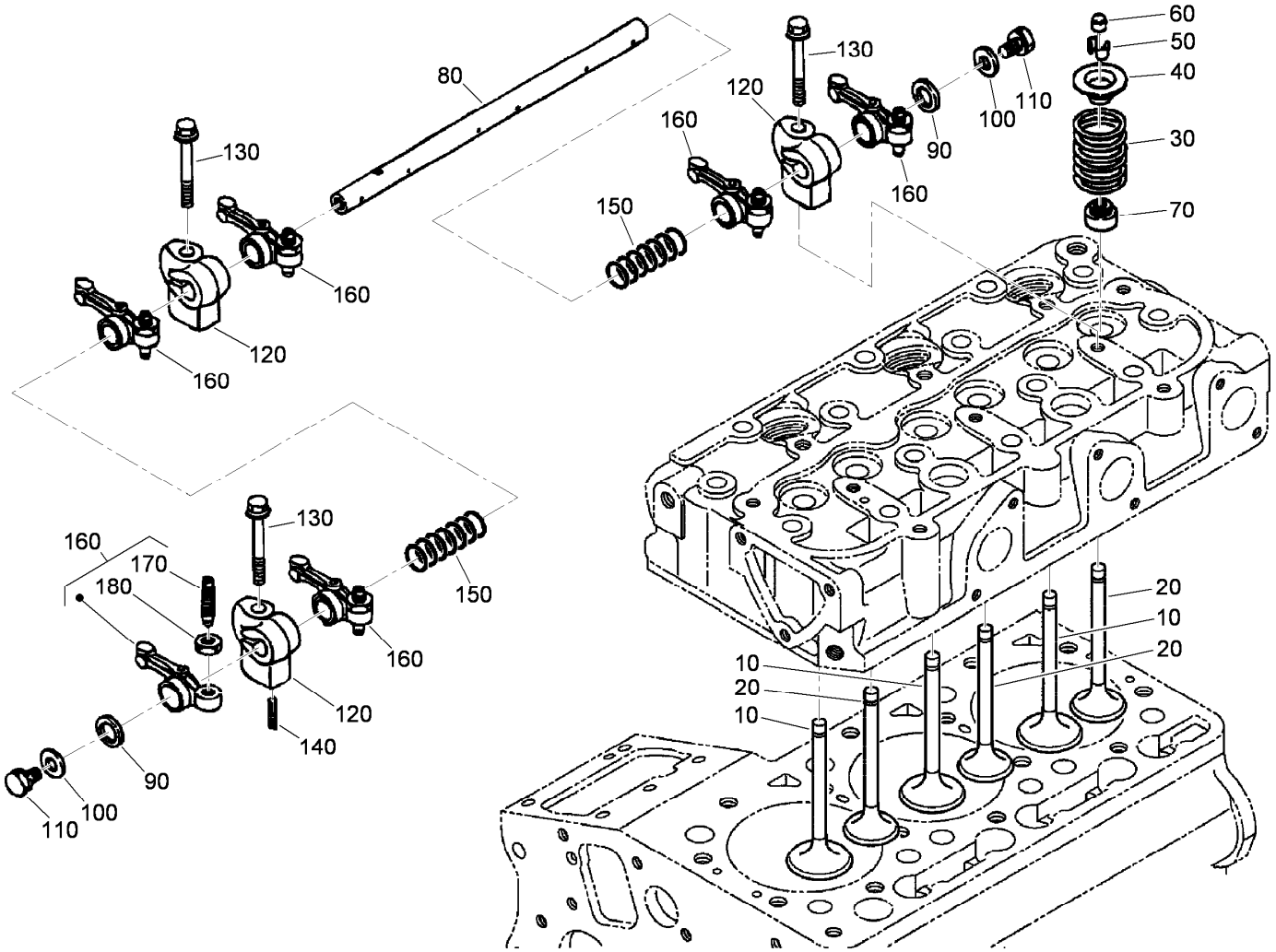


# Valve and Rocker Arm Assembly

| Ref. | Part Number | Qty. | Description |
|---|---|---|---|
| 10 | 112-2514 | 3 | Valve-Inlet |
| 20 | 112-2515 | 3 | Valve-Exhaust |
| 30 | 100-1823 | 6 | Spring-Valve |
| 40 | 100-1825 | 6 | Retainer-Spring, Valve |
| 50 | 120-3136 | 6 | Collet-Spring, Valve |
| 60 | 100-2155 | 6 | Cap-Valve |
| 70 | 100-1797 | 6 | Seal-Stem, Valve |
| 80 | 112-8341 | 1 | Shaft-Arm, Rocker |
| 90 | 100-2044 | 2 | Washer |

| Ref. | Part Number | Qty. | Description |
|---|---|---|---|
| 100 | 110-3832 | 2 | Washer-Plain |
| 110 | 100-1762 | 2 | Bolt |
| 120 | 110-3833 | 3 | Bracket-Arm, Rocker |
| 130 | 110-3834 | 3 | Bolt-Flange |
| 140 | 98-7602 | 1 | Pin-Spring |
| 150 | 112-8342 | 2 | Spring |
| 160 | 120-3140 | 6 | *obs* Rocker Arm ASM |
| 170 | 100-1885 | 6 | Screw-Adjusting |
| 180 | 100-1827 | 6 | Nut |

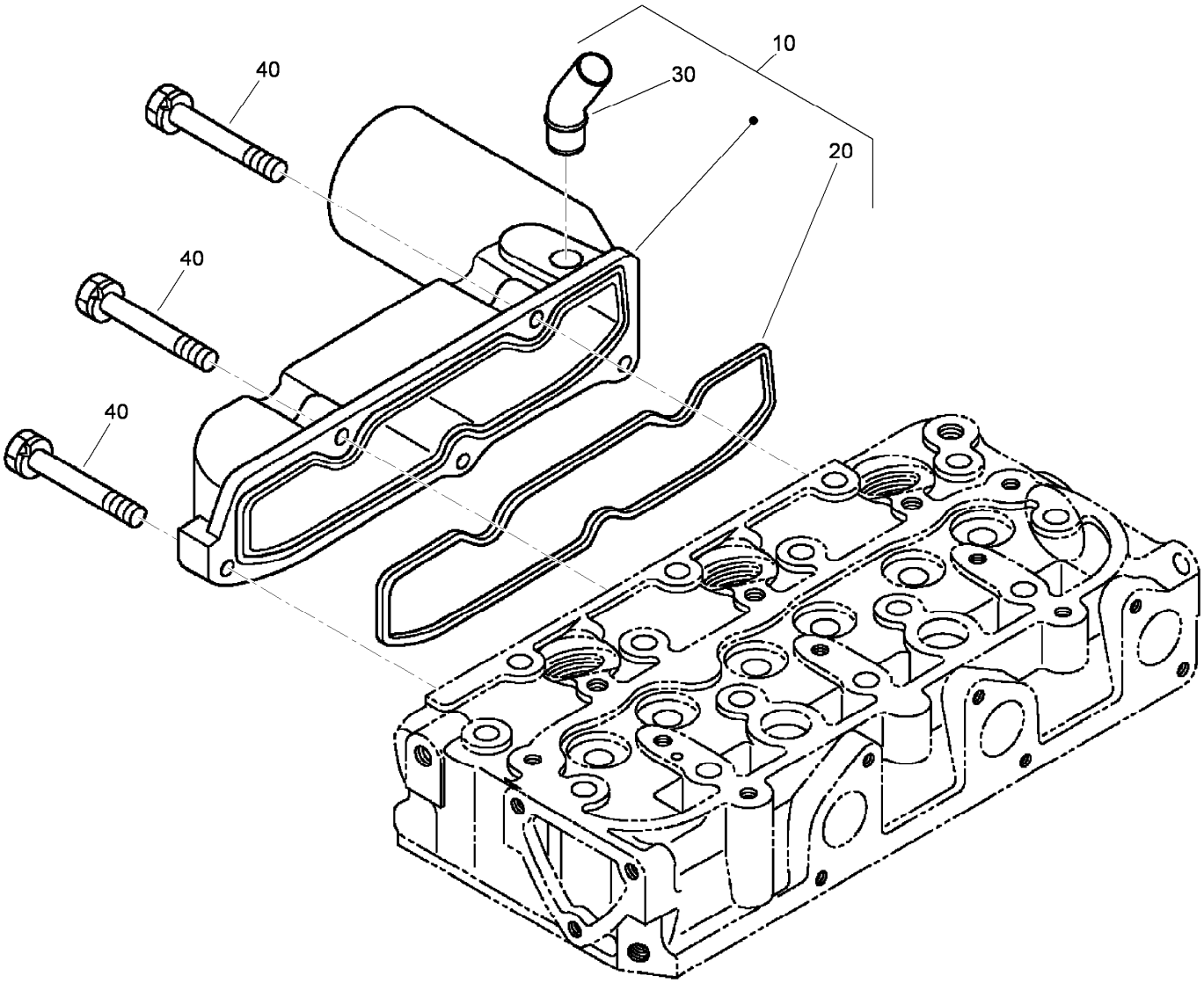


# Intake Manifold Assembly

| Ref. | Part Number | Qty. | Description |
|---|---|---|---|
| 10 | 120-3141 | 1 | Intake Manifold ASM |
| 20 | 110-3838 | 1 | Gasket-Manifold, Intake |
| 30 | 110-3837 | 1 | Pipe-Breather |
| 40 | 98-9352 | 5 | Bolt |

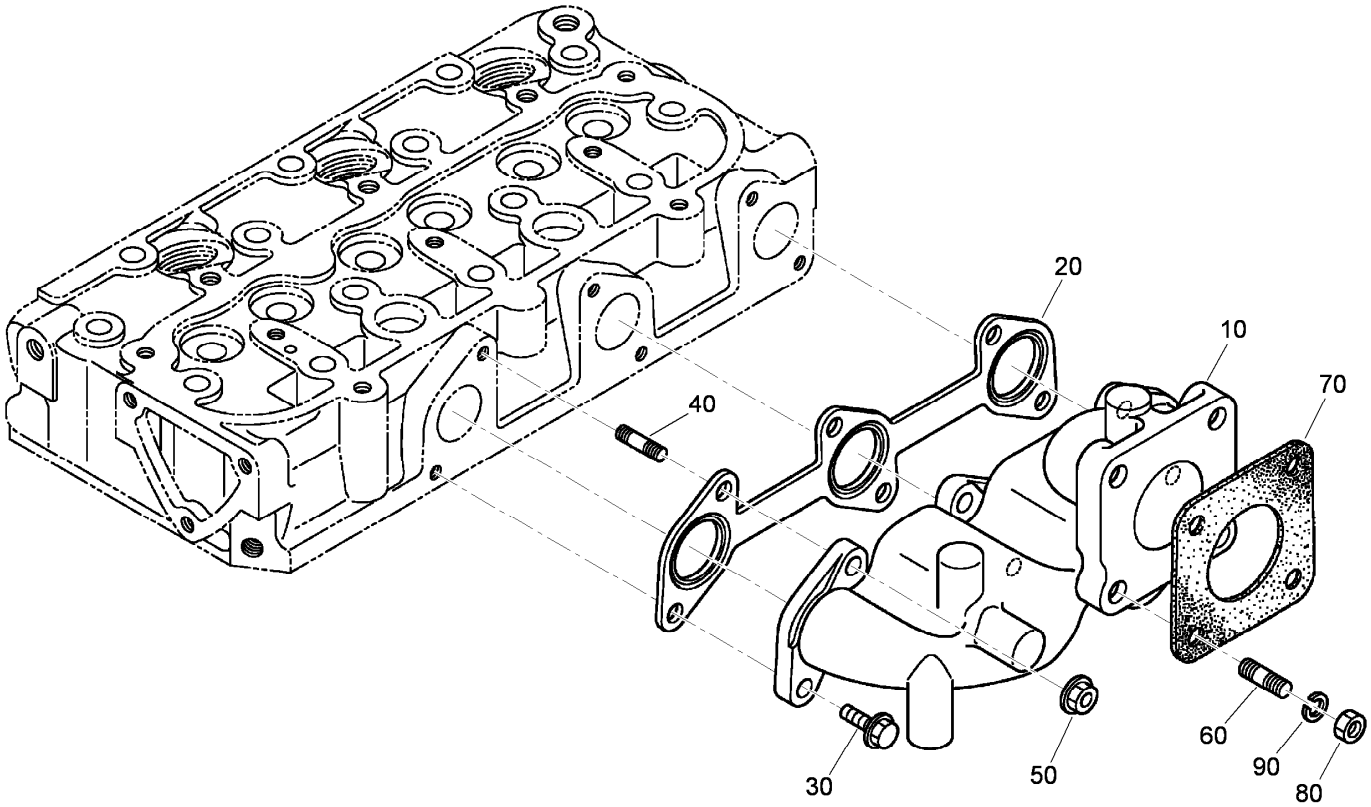


# Exhaust Manifold Assembly

| Ref. | Part Number | Qty. | Description |
|---|---|---|---|
| 10 | 110-3839 | 1 | Manifold-Exhaust |
| 20 | 110-3840 | 1 | Gasket-Manifold, Exhaust |
| 30 | 100-1775 | 3 | Bolt |
| 40 | 100-2202 | 3 | Stud |
| 50 | 100-1778 | 3 | Nut |
| 60 | 98-7769 | 4 | Stud |
| 70 | 99-8343 | 1 | Gasket-Muffler |
| 80 | 98-7534 | 4 | Nut |
| 90 | 105-2893 | 4 | Washer-Spring |

# Attachments and Accessories

## For 04520 Greensmaster 3400 TriFlex Traction Unit

| Product Name | Model/Part |
|---|---|
| Turf Evaluator | 04399 |
| 8-Blade DPA Reel Mower | 04613 |
| 11-Blade DPA Reel Mower | 04614 |
| 14-Blade DPA Reel Mower | 04615 |
| Three-Wheel Drive Kit | 04714 |
| Hydraulic Oil Leak Detector Kit | 04715 |
| Light Kit | 04717 |
| Standard Seat Kit | 04718 |
| Premium Seat Kit | 04719 |
| Premium All Season Hydraulic Fluid (55 Gallon Drum) | 108-1177 |
| Premium All Season Hydraulic Fluid (5 Gallon Pail) | 108-1178 |
| Bimini Folding Shade Assembly | 115-4510 |
| Oil Cooler Kit | 117-9314 |
| Bag Kit | 119-1715 |
| Premium Synthetic Bio-Degradable Hydraulic Fluid (5 Gallon Pail) | 119-2157 |
| Premium Synthetic Bio-Degradable Hydraulic Fluid (55 Gallon Drum) | 119-2158 |
| Premium Armrest Kit | 119-7105 |
| Spark Arrester Kit | 120-1951 |
| Premium Engine Oil 10w30 (55 Gallon Drum) | 121-6392 |
| Premium Engine Oil 10w30 (5 Gallon Pail) | 121-6393 |
| 400-hour Filter Maintenance Kit | 30043 |
| LH Armrest Asm | 92-7307 |
| Tire-TURFMATE | 99-4506 |

**Notes:**

**Notes:**

**Notes:**

TORO®

Count on it.