Form No. 3427-809 Rev B

TORO®

Count on it.

Parts Catalog

# Workman® HDX

## 4-Wheel Drive Utility Vehicle with Bed

**Model No. 07386TC—Serial No. 404350001 and Up**

Register at www.Toro.com.
Original Instructions (EN)

CE

*3427-809* B

# Ordering Replacement Parts

To order replacement parts, please supply the part number, the quantity, and the description of each part desired.

### Understanding Reference Numbers

Each identified part in an illustration has a reference number. The reference number for a part also appears in the parts list, along with other information about the part.

This catalog uses two special reference number formats, one to indicate parts in a service assembly and another to indicate the quantity of a given part in an illustration.

### Service Assembly Reference Numbers

Parts in service assemblies have reference numbers in the form a:b. The a represents the reference number of the entire service assembly and the b represents a sequential number unique to each part within the service assembly.

For example, a wheel assembly might be identified by reference number 6, the tire by 6:1, the valve by 6:2, and the wheel by 6:3. When you order the assembly identified by reference number 6, you receive all parts identified by reference numbers 6:1,6:2, and 6:3. However, you may also order any part individually. Reference numbers of this type appear in illustration and in parts lists.

### Reference Numbers Indicating Quantity

In an illustration, if a reference number indicates more than one part, the reference number has the form nX y. The n represents the quantity of the part, the X is the multiplication symbol, and the y represents the reference number.

For example, in an illustration, the reference number 2X 37 means that two of the parts identified by reference number 37 are indicated.

# Contents


Front Frame Assembly . . . 5
Rear Frame and Suspension Assembly . . . 6
Rear Axle Assembly . . . 7
Brake Caliper Assembly No. 127-7424 . . . 9
Driveshaft Assembly . . . 10
Front and Rear Brake Line Assembly . . . 11
Front Suspension Assembly . . . 12
Steering and Front Wheel Assembly . . . 13
Steering Linkage Assembly . . . 14
Hydraulic Cylinder Assembly No. 120-5059 . . . 15
Front Control Arm Assembly . . . 16
Brake and Clutch Pedal Assembly . . . 17
Master Cylinder Assembly No. 104-6782 . . . 18
Accelerator Assembly . . . 19
Console Assembly . . . 20
Shift Assembly No. 106-7887 . . . 22
Bumper, Hood and Seat Base Assembly . . . 23
Dash Assembly . . . 24
Steering Hydraulic Assembly . . . 25
Steering Valve Assembly No. 120-4813 . . . 26
Seat Assembly . . . 27
Roll-Over Protection System Assembly . . . 28
Full Bed and Side Panel Assembly . . . 29
Engine Sub Frame Assembly . . . 30
Engine and Exhaust Assembly . . . 31
Cooling System Assembly . . . 32
Radiator Assembly . . . 33
Clutch Linkage Assembly . . . 34
Transaxle Assembly . . . 35
Case Assembly 4 Wheel Drive Transaxle Assembly No. 115-2175 . . . 36
Center Plate Assembly 4 Wheel Drive Transaxle Assembly No. 115-2175 . . . 37
Main Shaft Assembly 4 Wheel Drive Transaxle Assembly No. 115-2175 . . . 38
Reduction Shaft Assembly 4 Wheel Drive Transaxle Assembly No. 115-2175 . . . 39
Reverse Shaft Assembly 4 Wheel Drive Transaxle Assembly No. 115-2175 . . . 40
Main Shift Assembly 4 Wheel Drive Transaxle Assembly No. 115-2175 . . . 41
Hi-Lo Shift Assembly 4 Wheel Drive Transaxle Assembly No. 115-2175 . . . 42
Countershaft Assembly 4 Wheel Drive Transaxle Assembly No. 115-2175 . . . 43
Differential Gear Assembly 4 Wheel Drive Transaxle Assembly No. 115-2175 . . . 44
Differential Carrier Assembly 4 Wheel Drive Transaxle Assembly No. 115-2175 . . . 45
Differential Lock Assembly 4 Wheel Drive Transaxle Assembly No. 115-2175 . . . 46
Axle Shaft Assembly 4 Wheel Drive Transaxle Assembly No. 115-2175 . . . 47
Front Drive Assembly 4 Wheel Drive Transaxle Assembly No. 115-2175 . . . 48
4 Wheel Drive Assembly . . . 49
Differential Assembly No. 119-0824 . . . 50
Drive Shaft Assembly No. 136-6327 . . . 51
Battery Assembly . . . 52
Tail Light and Fender Assembly . . . 53
Fuel System Assembly . . . 54
Hydraulic Lift Cylinder Assembly . . . 55
Hydraulic Cylinder Assembly No. 133-0620 . . . 57
Main Hydraulic Pump and Lift Valve Assembly . . . 58
Control Valve Assembly No. 43-1950 . . . 59
Air Cleaner Assembly . . . 60
Air Cleaner Assembly No. 138-5650 . . . 61



**© 2021—The Toro® Company**


**8111 Lyndale Avenue South**
**Bloomington, MN 55420**





**Contact us at www.Toro.com.**
**Printed in the USA.**


**All Rights Reserved**

# Contents (continued)

High Flow Assembly . . . . . 62
Hydraulic Pump Assembly No. 115-7787 . . . . . 63
Tank Assembly No. 114-8435 . . . . . 64
Hydraulic Manifold Assembly No. 115-2252 . . . . . 65
Coupler Assembly No. 114-8434 . . . . . 66
High Flow Hose Assembly . . . . . 67
Front and Rear Wire Harness Assembly . . . . . 68
Crankcase Assembly . . . . . 69
Oil Pan Assembly . . . . . 70
Cylinder Head Assembly . . . . . 71
Gear Case and Oil Filter Cartridge Assembly . . . . . 72
Cylinder Head Cover Assembly . . . . . 73
Dipstick, Guide and Oil Pump Assembly . . . . . 74
Main Bearing Case Assembly . . . . . 75
Cam Shaft and Idle Gear Shaft Assembly . . . . . 76
Piston and Crankshaft Assembly . . . . . 77
Flywheel, Starter and Sensor Switch Assembly . . . . . 78
Injection and Fuel Pump Covers Assembly . . . . . 79
Alternator and Pulley Assembly . . . . . 80
Alternator Components Assembly . . . . . 81
Starter Components Assembly . . . . . 82
Thermostat and Water Pump Assembly . . . . . 83
Valve and Rocker Arm Assembly . . . . . 84
Inlet Manifold Assembly . . . . . 85
Exhaust Manifold Assembly . . . . . 86
Wire Harness Assembly . . . . . 87
Electronic Control Unit Assembly . . . . . 88
Operator Manual and Miscellaneous Engine Parts . . . . . 89
Upper Engine Gasket Kit . . . . . 90
Lower Engine Gasket Kit . . . . . 91
Attachments and Accessories . . . . . 92

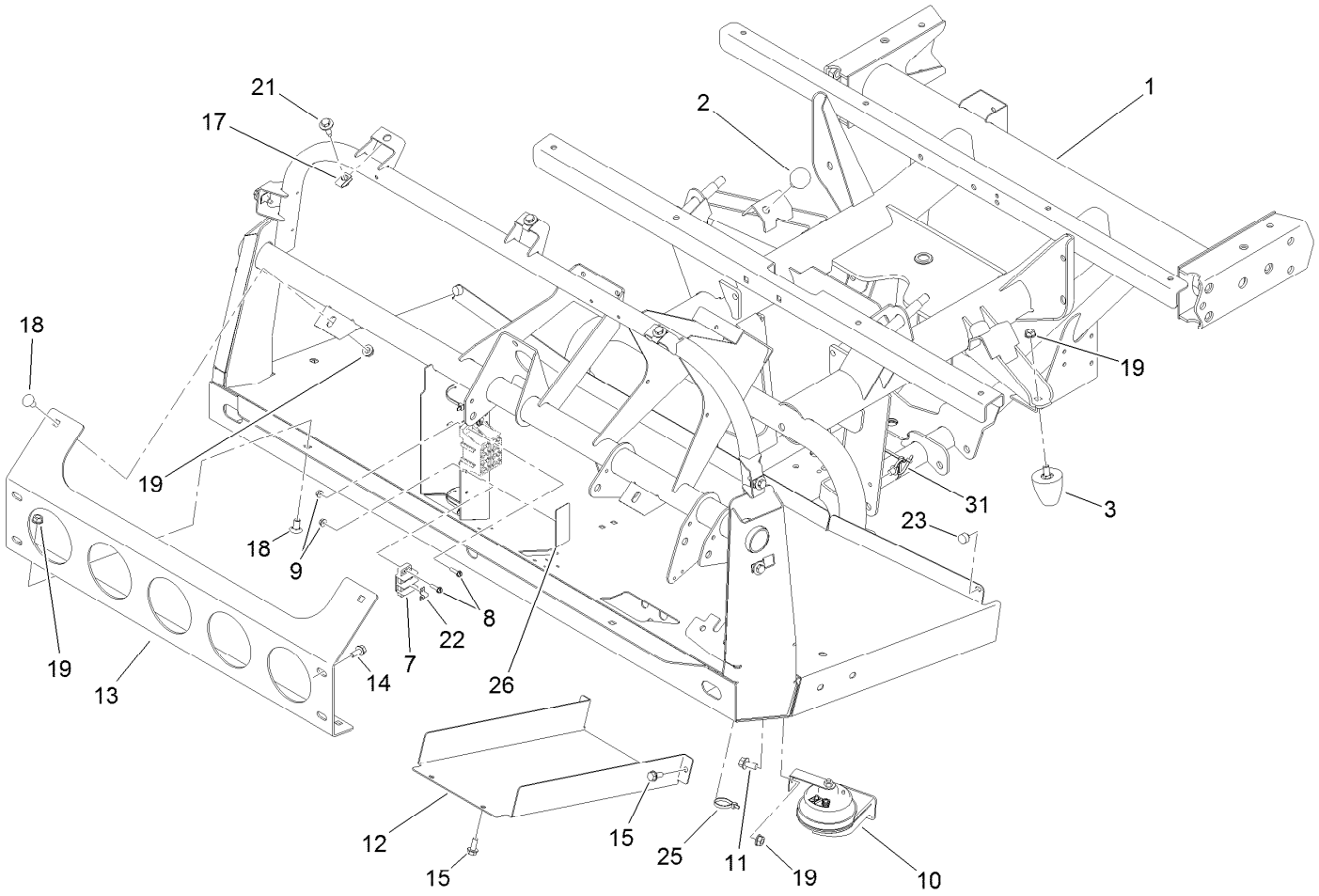


# Front Frame Assembly

| Ref. | Part Number | Qty. | Description |
|---|---|---|---|
| 1 | 138-9251 | 1 | Frame-Front |
| 2 | 87-2440 | 2 | Bumper-Rubber |
| 3 | 26-0071 | 2 | Snubber-Rubber |
| 7 | 42862 | 1 | Block-Terminal, Ground |
| 8 | 32105-13 | 6 | Screw-HWH |
| 9 | 3290-148 | 6 | Nut-HF |
| 10 | 110-2594 | 1 | Horn |
| 11 | 3234-1 | 1 | Screw-HHF |
| 12 | 106-2427-03 | 1 | Cover |
| 13 | 114-8272-03 | 1 | Bracket-Bumper |
| 14 | 3234-5 | 4 | Screw-HHF |

| Ref. | Part Number | Qty. | Description |
|---|---|---|---|
| 15 | 32144-70 | 4 | Screw-HWHTF |
| 17 | 94-2413 | 7 | Nut-U |
| 18 | 3231-21 | 4 | Screw-CARR |
| 19 | 3290-357 | 7 | Nut-HSF |
| 21 | 114-8418 | 7 | Screw-HWH, Sems |
| 22 | 42863 | 1 | Strip-Jumper |
| 23 | 107-8042 | 2 | Bumper-Rubber |
| 25 | 3290-379 | 8 | Tie-Cable |
| 26 | 115-7813 | 1 | Decal-Fuse |
| 31 | 32180-030 | 2 | Clip-Tie |

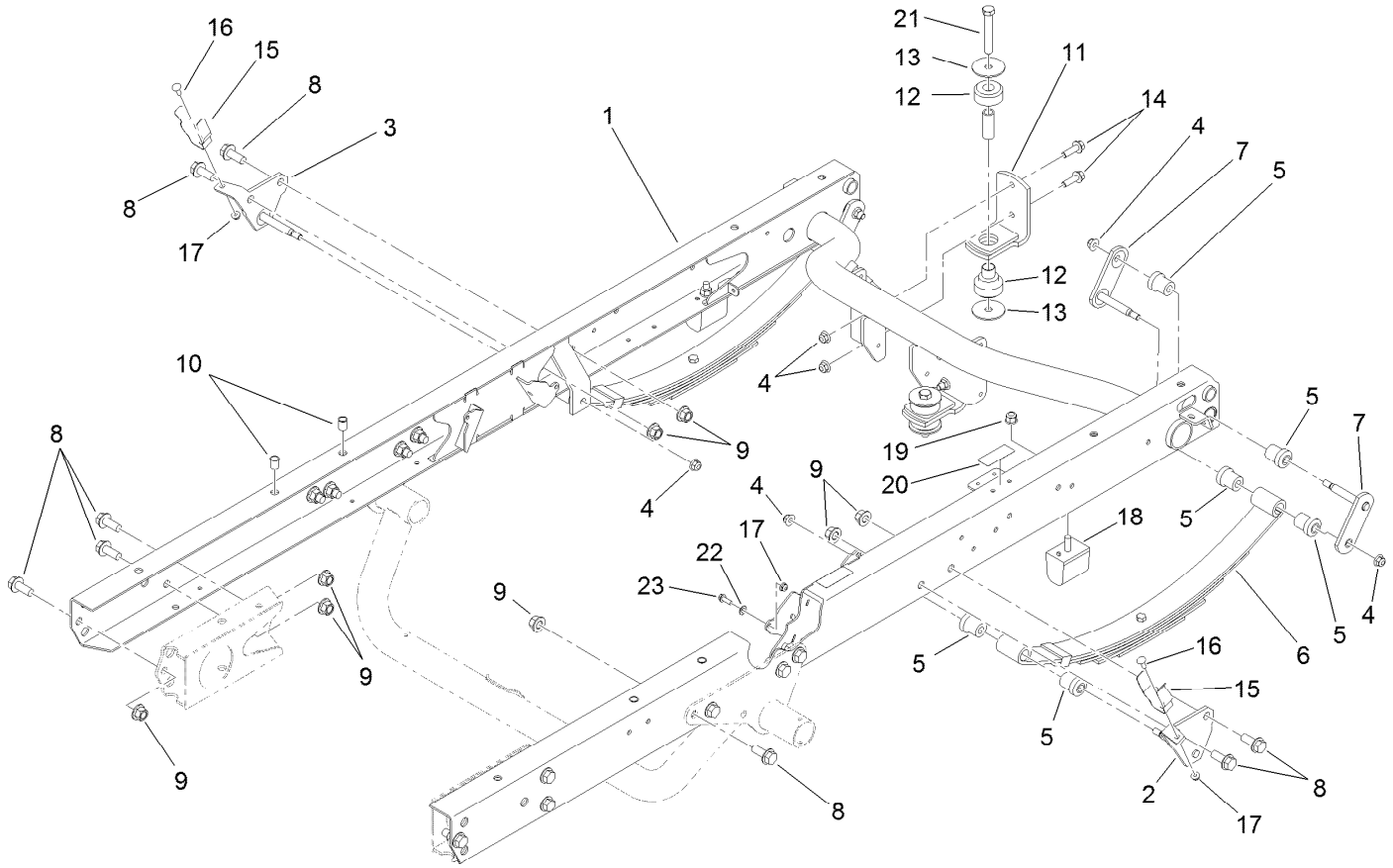


# Rear Frame and Suspension Assembly

| Ref. | Part Number | Qty. | Description |
|---|---|---|---|
| 1 | 115-2255-03 | 1 | Frame-Rear |
| 2 | 131-3474 | 1 | Mount-Spring, LH |
| 3 | 131-3472 | 1 | Mount-Spring, RH |
| 4 | 104-8301 | 10 | Nut-HF, NI |
| 5 | 87-4760 | 12 | Bushing-Rubber |
| 6 | 87-1490 | 2 | Spring-Leaf, Rear |
| 7 | 131-3476 | 4 | Shackle |
| 8 | 3234-38 | 18 | Screw-HHF |
| 9 | 99-5107 | 18 | Nut-Lock |
| 10 | 32148-9 | 4 | Nut-Clinch |
| 11 | 87-5800-03 | 2 | Mount-Transaxle |
| 12 | 106-7865 | 2 | Mount-Engine |

| Ref. | Part Number | Qty. | Description |
|---|---|---|---|
| 13 | 87-5100 | 4 | Washer-Snubbing |
| 14 | 3234-24 | 4 | Screw-HHF |
| 15 | 108-3109 | 2 | Retainer-Cylinder |
| 16 | 3229-1 | 2 | Screw-CARR |
| 17 | 104-7201 | 3 | Nut-HF, NI |
| 18 | 87-3470 | 2 | Bumper |
| 19 | 103-9511 | 2 | Nut-Lock, NI |
| 20 | 115-2047 | 2 | Decal-Surface, Hot |
| 21 | 33116-080 | 2 | Screw-HH |
| 22 | 3255-8 | 1 | Washer-Lock |
| 23 | 32105-15 | 1 | Screw-HWH |

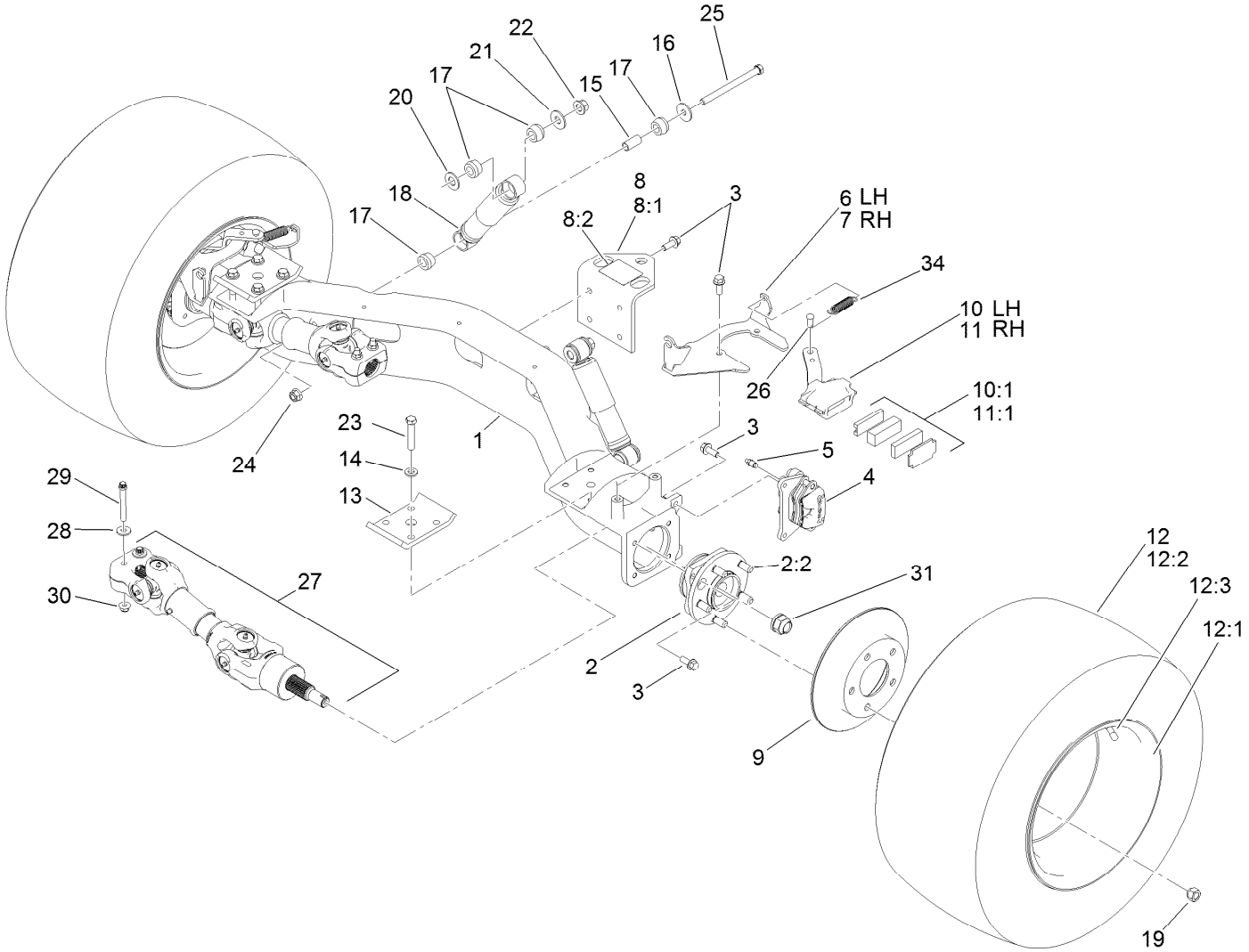


# Rear Axle Assembly

| Ref. | Part Number | Qty. | Description |
|---|---|---|---|
| 1 | 119-9515 | 1 | Axle-Rear |
| 2 | 121-9751 | 2 | Hub-Bearing, Wheel |
| 2:2 | 121-9752 | 5 | Stud-Wheel |
| 3 | 3234-11 | 20 | Screw-HHF |
| 4 | 127-7424 | 2 | Brake Caliper ASM |
| 5 | 119-9509 | 2 | Screw-Bleed |
| 6 | 115-2362-03 | 1 | Bracket-Caliper, LH |
| 7 | 115-2359-03 | 1 | Bracket-Caliper, RH |
| 8 | 115-7742 | 1 | Hitch ASM |
| 8:1 | 92-5951-03 | 1 | Angle-Hitch |
| 8:2 | 136-1163 | 1 | Decal-Load, Towing |
| 9 | 114-8351 | 2 | Rotor-Brake |
| 10 | 114-8365 | 1 | Caliper-Mechanical, LH |
| 10:1 | 115-7847 | 1 | Parking Brake Pad Kit |
| 11 | 114-8366 | 1 | Caliper-Mechanical, RH |
| 11:1 | 115-7847 | 1 | Parking Brake Pad Kit |
| 12 | 131-8432 | 2 | Tire/Wheel ASM |
| 12:1 | 131-8429 | 1 | Wheel |

| Ref. | Part Number | Qty. | Description |
|---|---|---|---|
| 12:2 | 131-8433 | 1 | Tire-Rear |
| 12:3 | 232-27 | 1 | Stem-Valve |
| 13 | 87-7470-03 | 2 | Plate-Spring, Clamp |
| 14 | 87-7480 | 8 | Washer |
| 15 | 87-3600 | 2 | Spacer-Absorber, Shock |
| 16 | 87-5330 | 2 | Washer |
| 17 | 87-3920 | 8 | Bushing |
| 18 | 121-9774 | 2 | Absorber-Shock |
| 19 | 242-50 | 10 | Nut-Lug |
| 20 | 3256-27 | 2 | Washer-Flat |
| 21 | 3256-6 | 2 | Washer-Flat |
| 22 | 99-5107 | 2 | Nut-Lock |
| 23 | 115-2398 | 8 | Bolt-HH |
| 24 | 114-8417 | 2 | Nut-HF, NI |
| 25 | 114-8424 | 2 | Screw-HH |
| 26 | 283-85 | 2 | Pin-Clevis |
| 27 | | 2 | Driveshaft ASM ● |
| 28 | 80-6990 | 4 | Washer-Hardened |

● Not serviced separately

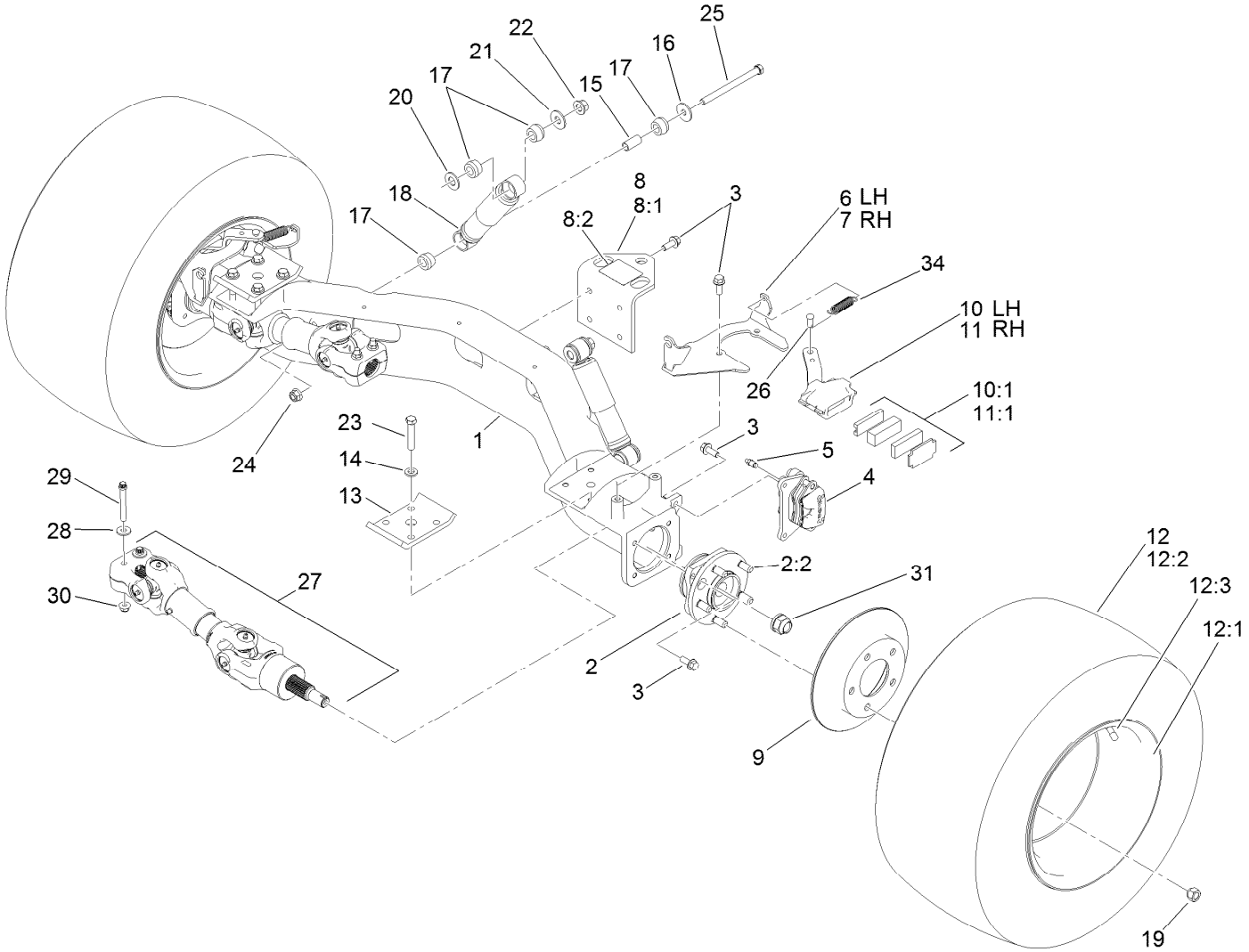


# Rear Axle Assembly (continued)

| Ref. | Part Number | Qty. | Description |
|---|---|---|---|
| 29 | 98-2939 | 4 | Screw-Cap |
| 30 | 104-8301 | 4 | Nut-HF, NI |

| Ref. | Part Number | Qty. | Description |
|---|---|---|---|
| 31 | 115-2164 | 2 | Nut-Spindle |
| 34 | 104-6415 | 2 | Spring-Return, Pedal |

● Not serviced separately

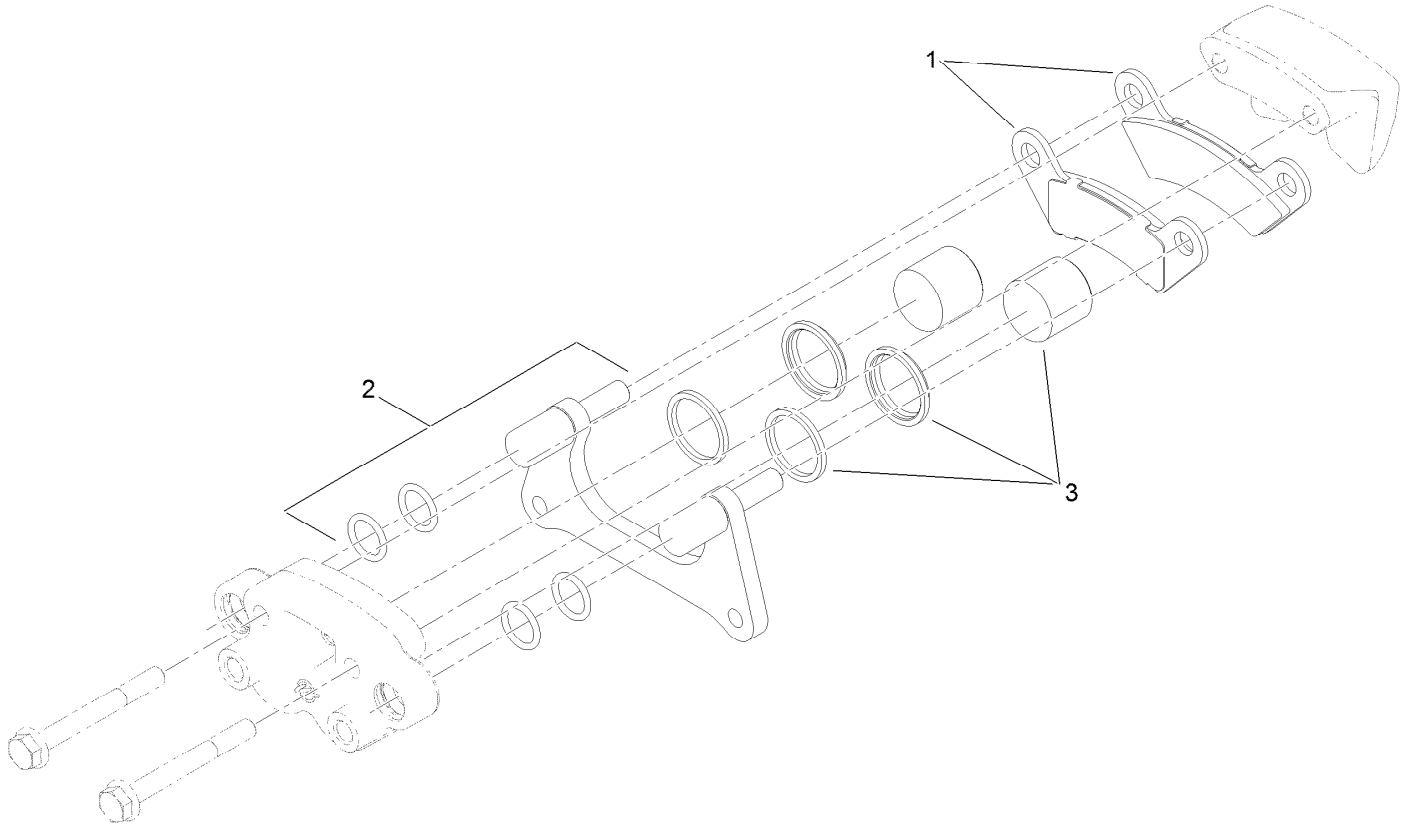


# Brake Caliper Assembly No. 127-7424

| *Ref.* | *Part Number* | *Qty.* | *Description* |
|---|---|---|---|
| 1 | 119-9510 | 1 | *obs* Pads-Brake |
| 2 | 119-9511 | 1 | Bracket Kit |
| 3 | 133-0614 | 1 | Piston Kit |

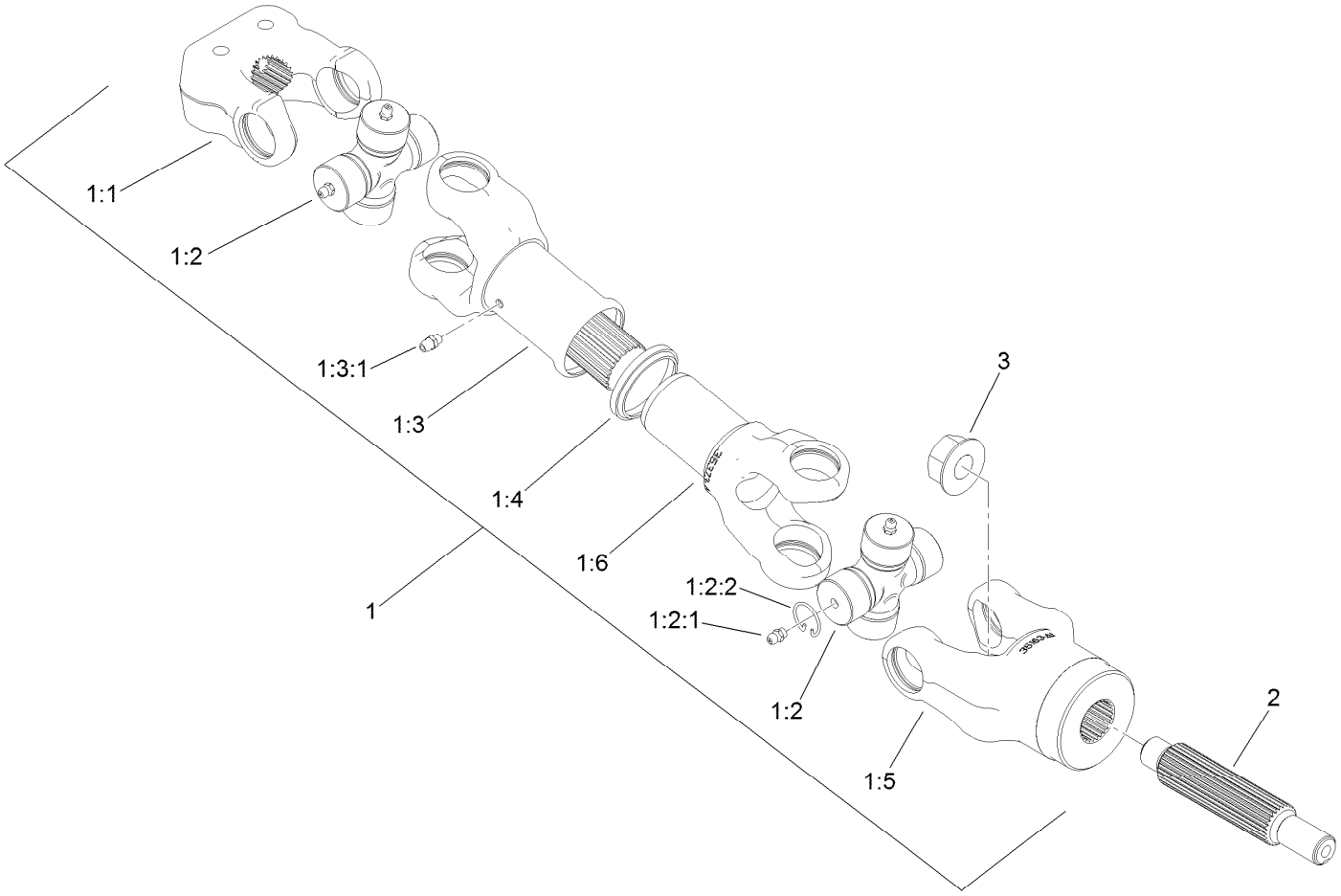


# Driveshaft Assembly

| *Ref.* | *Part Number* | *Qty.* | *Description* |
|---|---|---|---|
| 1 | 114-8367 | 1 | Driveshaft ASM |
| 1:1 | 98-2940 | 1 | Yoke |
| 1:2 | 92-4187 | 2 | Cross And Bearing Kit |
| 1:2:1 | 302-58 | 4 | Fitting-Straight |
| 1:2:2 | 92-4188 | 4 | Ring-Snap |
| 1:3 | 92-4179 | 1 | Yoke-Tube, Shaft And Seal |
| 1:3:1 | 302-5 | 1 | Fitting-Grease |
| 1:4 | 92-4180 | 1 | Seal |
| 1:5 | 115-2351 | 1 | Yoke |
| 1:6 | 92-4182 | 1 | Yoke-Telescoping |
| 2 | 115-7771 | 1 | Shaft-Splined |
| 3 | 32128-53 | 1 | Nut-HF |

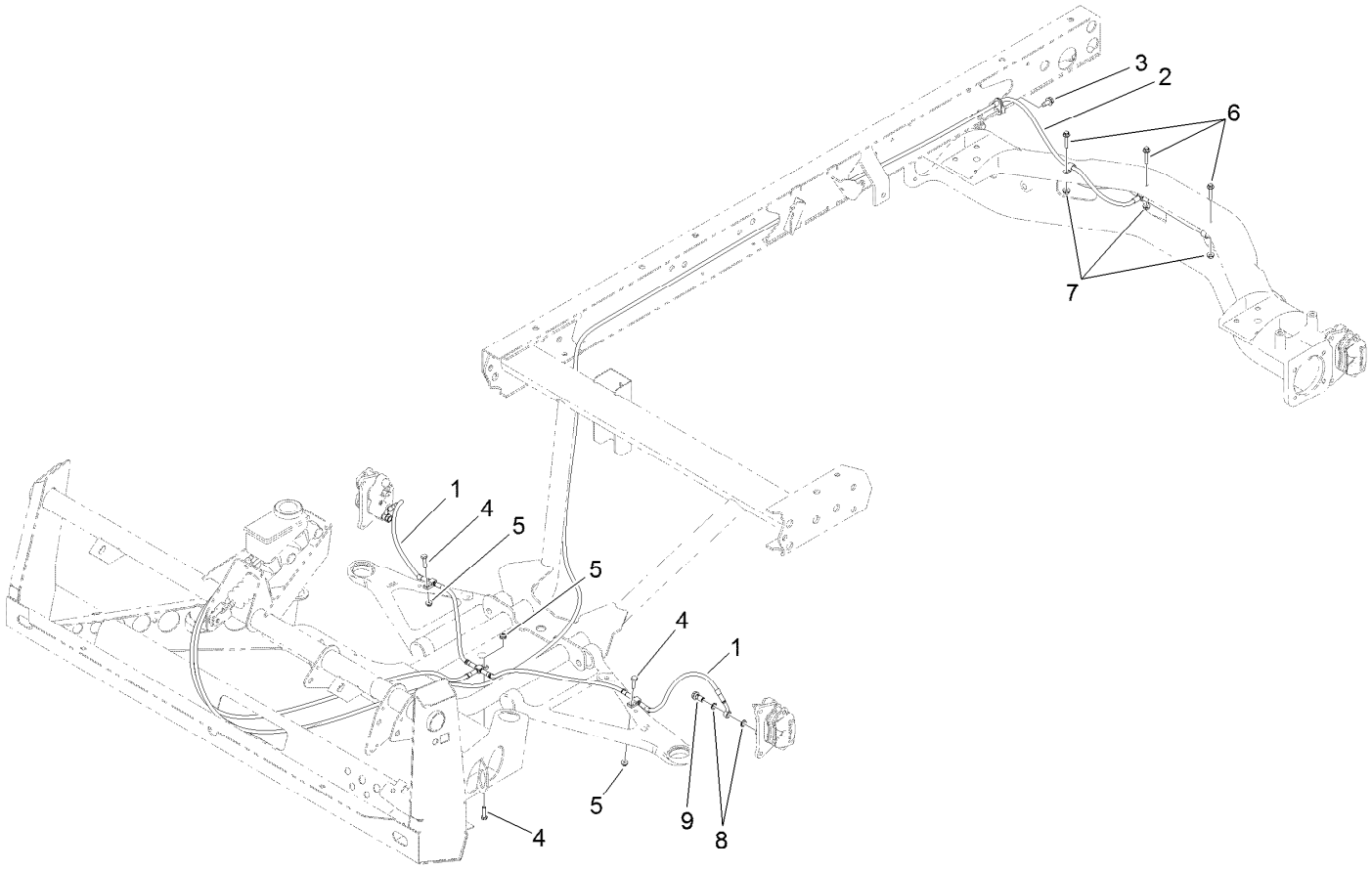


# Front and Rear Brake Line Assembly

| *Ref.* | *Part Number* | *Qty.* | *Description* |
|---|---|---|---|
| 1 | 119-9682 | 1 | Front Brake Line ASM |
| 2 | 119-9681 | 1 | Rear Brake Line ASM |
| 3 | 32144-70 | 1 | Screw-HWHTF |
| 4 | 321-6 | 3 | Screw-HH |
| 5 | 104-7201 | 3 | Nut-HF, NI |
| 6 | 3234-21 | 3 | Screw-HHF |
| 7 | 32128-33 | 3 | Nut-HF |
| 8 | 115-2341 | 8 | Washer-Banjo |
| 9 | 120-4875 | 4 | Bolt-Flange, Banjo |

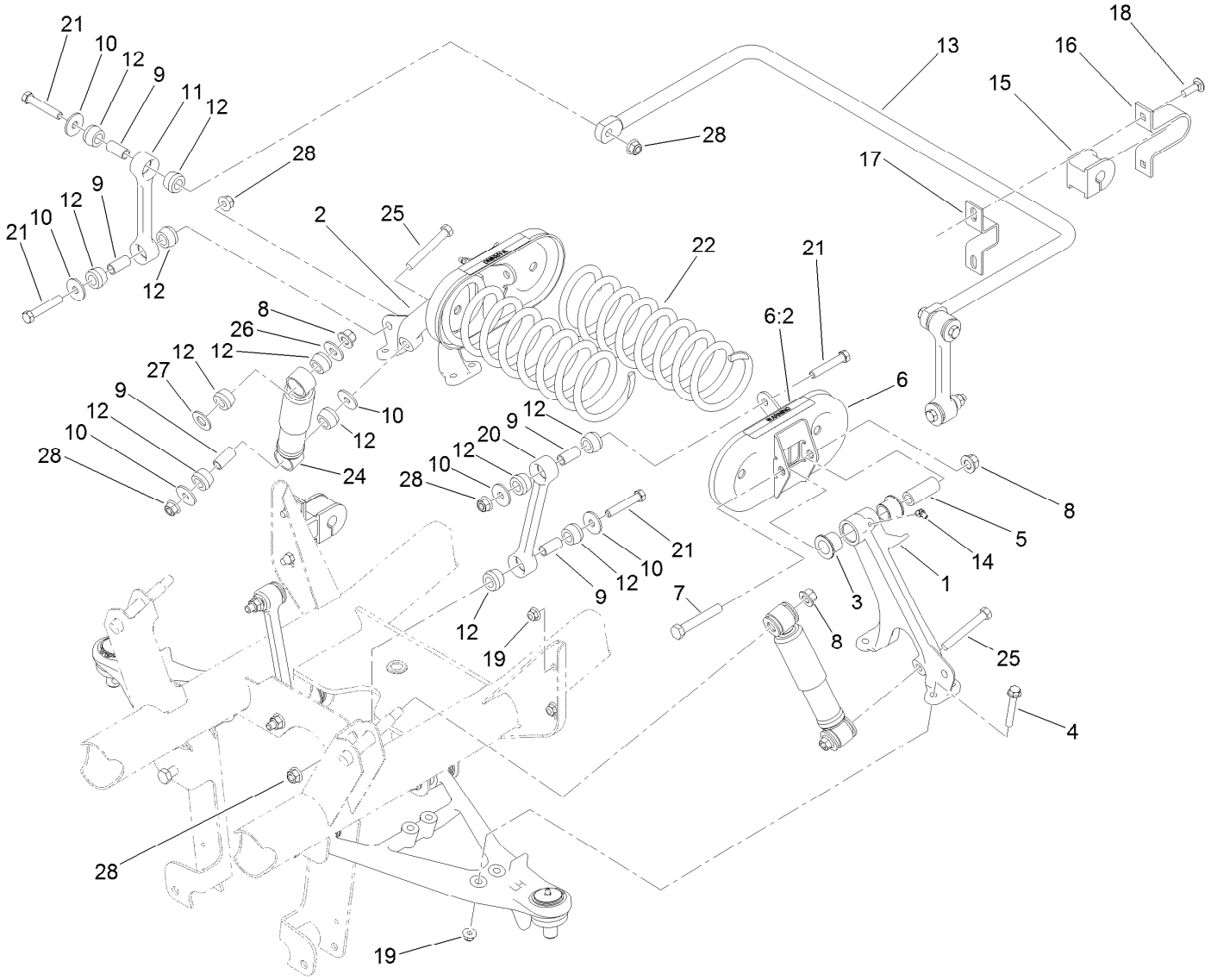


# Front Suspension Assembly

| Ref. | Part Number | Qty. | Description |
|---|---|---|---|
| 1 | 87-0160 | 1 | Tower-Control Arm, LH |
| 2 | 87-0150 | 1 | Tower-Control Arm, RH |
| 3 | 33-3090 | 4 | Bushing |
| 4 | 3234-39 | 8 | Screw-HHF |
| 5 | 87-2500 | 2 | Sleeve-Spring, Pivot |
| 6 | 105-7958 | 2 | Spring Cradle ASM |
| 6:2 | 93-9879 | 1 | Decal-Warning |
| 7 | 325-13 | 2 | Screw-HH |
| 8 | 99-5107 | 4 | Nut-Lock |
| 9 | 87-3600 | 10 | Spacer-Absorber, Shock |
| 10 | 87-5330 | 12 | Washer |
| 11 | 119-6725 | 2 | Link, Anti-Sway Bar |
| 12 | 87-3920 | 24 | Bushing |
| 13 | 133-0633-03 | 1 | Bar-Anti-Sway, HD |

| Ref. | Part Number | Qty. | Description |
|---|---|---|---|
| 14 | 302-11 | 2 | Fitting-Lube, 45 DEG |
| 15 | 87-3910 | 2 | Bushing-Rubber |
| 16 | 87-4010-03 | 2 | Clamp-Bar, Sway |
| 17 | 87-3890-03 | 2 | Bracket-Bar, Sway |
| 18 | 3231-25 | 4 | Bolt-CARR |
| 19 | 104-8301 | 12 | Nut-HF, NI |
| 20 | 119-6724 | 2 | Link-Stabilizer |
| 21 | 324-10 | 8 | Screw-HH |
| 22 | 105-4183-01 | 2 | Spring-Compression |
| 24 | 121-9774 | 2 | Absorber-Shock |
| 25 | 324-13 | 2 | Screw-HH |
| 26 | 3256-6 | 2 | Washer-Flat |
| 27 | 3256-27 | 2 | Washer-Flat |
| 28 | 114-8417 | 10 | Nut-HF, NI |

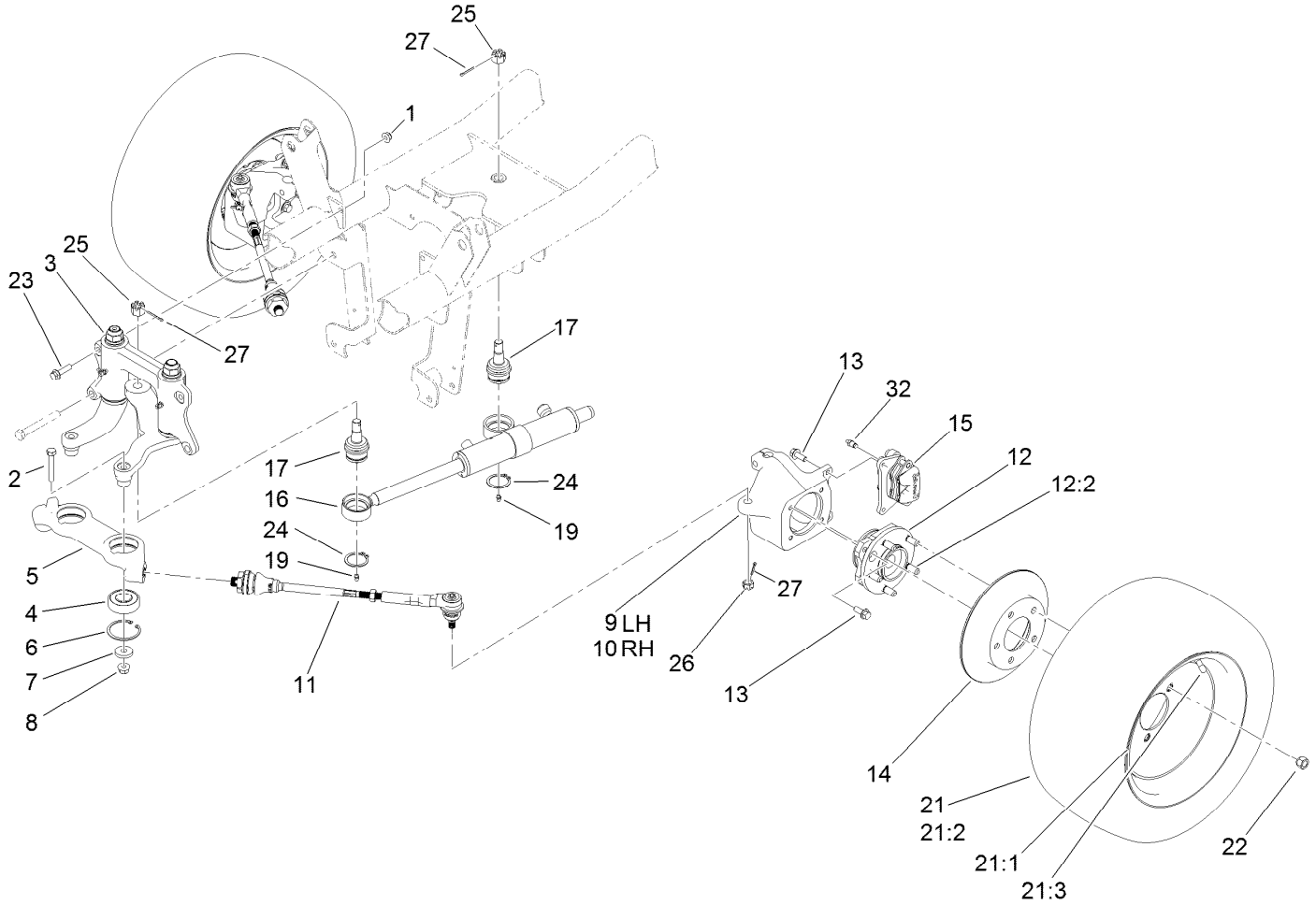


# Steering and Front Wheel Assembly

| Ref. | Part Number | Qty. | Description |
|---|---|---|---|
| 1 | 104-8301 | 2 | Nut-HF, NI |
| 2 | 324-10 | 2 | Screw-HH |
| 3 | | 1 | Steering Linkage ASM ● |
| 4 | 119-9548 | 2 | Bearing-Ball |
| 5 | 114-8296 | 1 | Link-Center |
| 6 | 32120-22 | 2 | Ring-Snap, Internal |
| 7 | 112843 | 2 | Washer |
| 8 | 114-8417 | 2 | Nut-HF, NI |
| 9 | 119-9513 | 1 | Knuckle-LH |
| 10 | 119-9514 | 1 | Knuckle-RH |
| 11 | 114-8356 | 2 | Tie Rod ASM |
| 12 | 121-9751 | 2 | Hub-Bearing, Wheel |
| 12:2 | 121-9752 | 5 | Stud-Wheel |
| 13 | 3234-11 | 12 | Screw-HHF |
| 14 | 114-8351 | 2 | Rotor-Brake |

| Ref. | Part Number | Qty. | Description |
|---|---|---|---|
| 15 | 127-7424 | 2 | Brake Caliper ASM |
| 16 | 120-5059 | 1 | HYD Cylinder ASM |
| 17 | 106-6774 | 2 | Joint-Ball |
| 19 | 302-5 | 2 | Fitting-Grease |
| 21 | 131-8430 | 2 | Tire/Wheel ASM |
| 21:1 | 131-8431 | 1 | Wheel |
| 21:2 | 131-6670 | 1 | Tire |
| 21:3 | 232-27 | 1 | Stem-Valve |
| 22 | 242-50 | 10 | Nut-Lug |
| 23 | 114-4681 | 2 | Screw-HHF |
| 24 | 32151-104 | 2 | Ring-Retaining, External |
| 25 | 32136-14 | 2 | Nut-Hst |
| 26 | 32136-3 | 2 | Nut-SHH |
| 27 | 3272-12 | 4 | Pin-Cotter |
| 32 | 119-9509 | 2 | Screw-Bleed |

● Not serviced separately

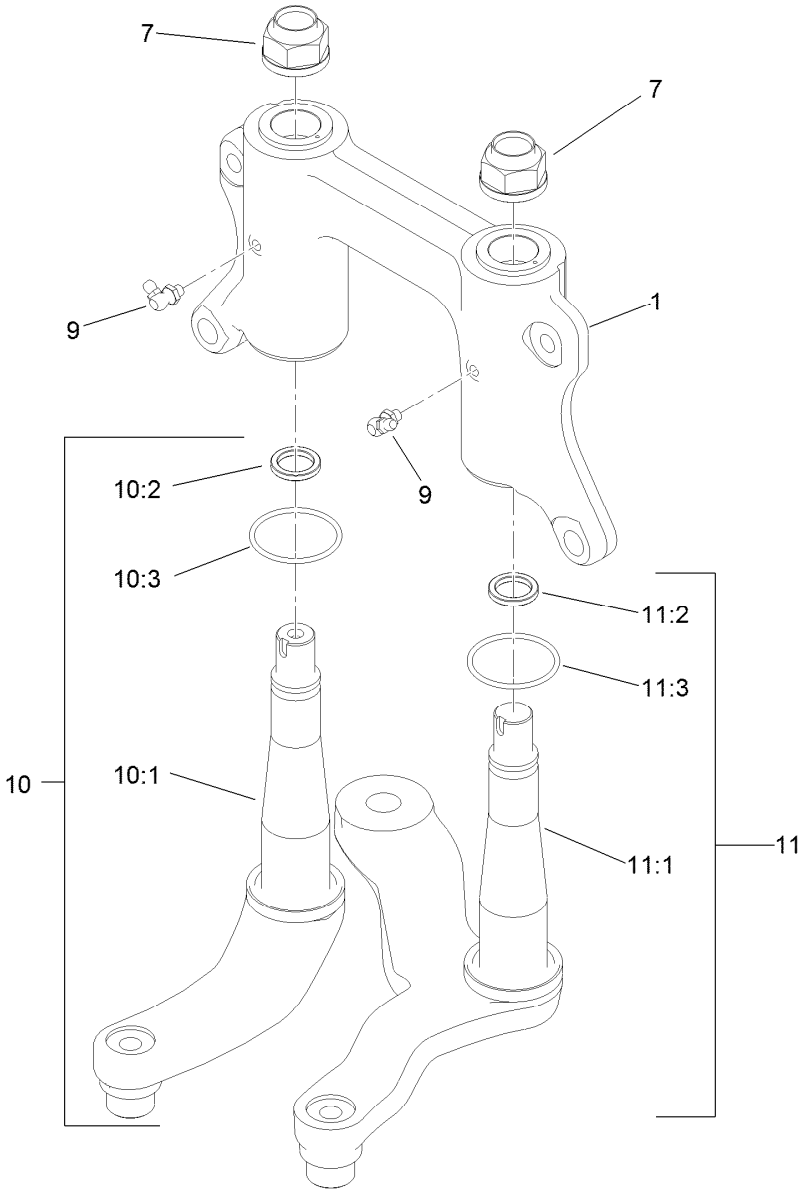


# Steering Linkage Assembly

| *Ref.* | *Part Number* | *Qty.* | *Description* |
|---|---|---|---|
| 1 | 132-6767 | 1 | Mount-Pivot, W/Bushings |
| 7 | 115-2164 | 2 | Nut-Spindle |
| 9 | 302-60 | 2 | Fitting-Grease |
| 10 | 132-0794 | 1 | Idler Arm ASM |
| 10:1 | 132-0792 | 1 | Idler Arm And Thrust Washer ASM |
| 10:2 | 93-7510 | 1 | Ring-Quad |
| 10:3 | 131-3499 | 1 | O-Ring |
| 11 | 132-0795 | 1 | Pitman Arm ASM |
| 11:1 | 132-0793 | 1 | Pitman Arm And Thrust Washer ASM |
| 11:2 | 93-7510 | 1 | Ring-Quad |
| 11:3 | 131-3499 | 1 | O-Ring |

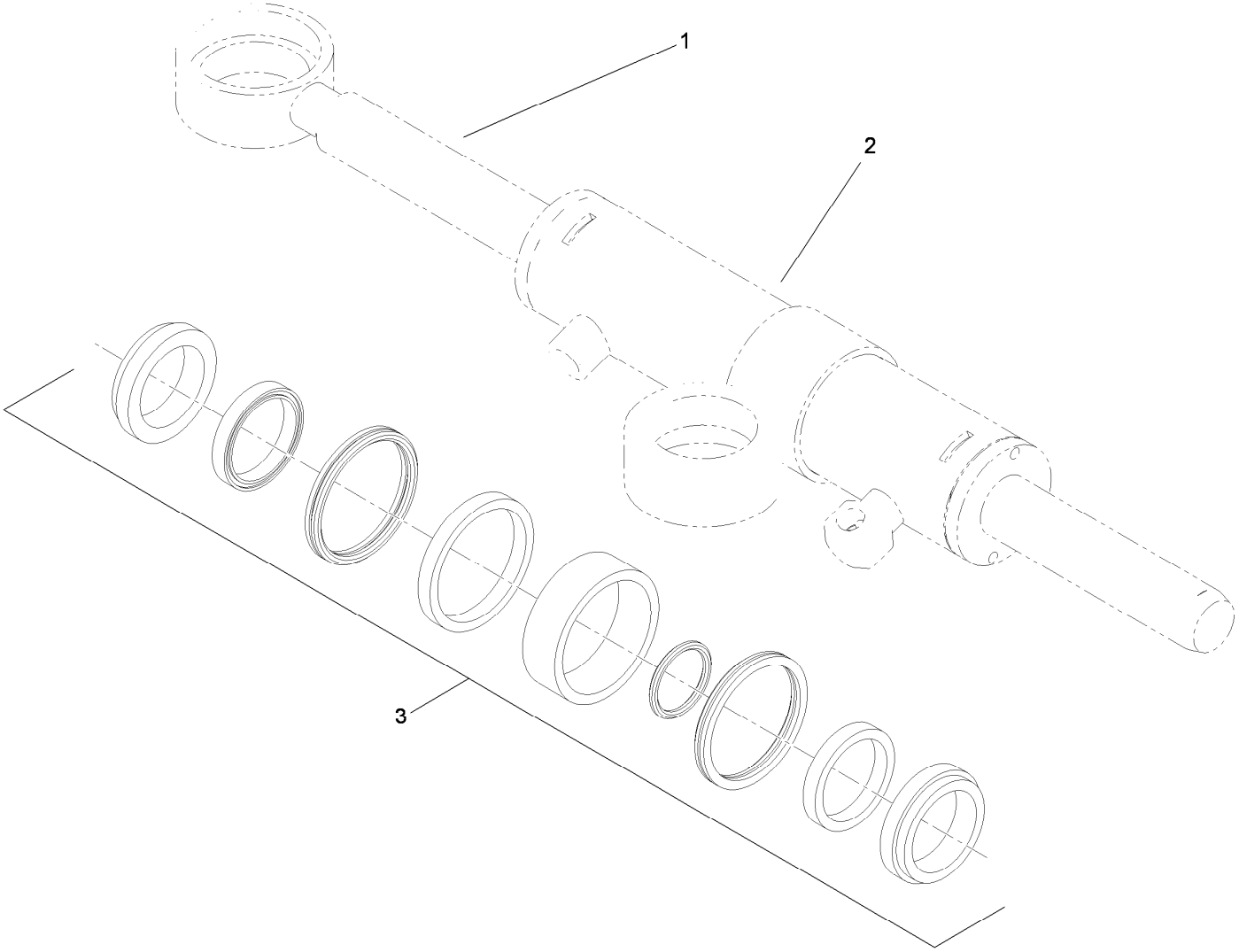


# Hydraulic Cylinder Assembly No. 120-5059

| *Ref.* | *Part Number* | *Qty.* | *Description* |
|---|---|---|---|
| 1 | | 1 | Rod-Cylinder ● |
| 2 | | 1 | Body-Cylinder ● |
| 3 | 115-2160 | 1 | Cylinder Repair Kit |

● Not serviced separately

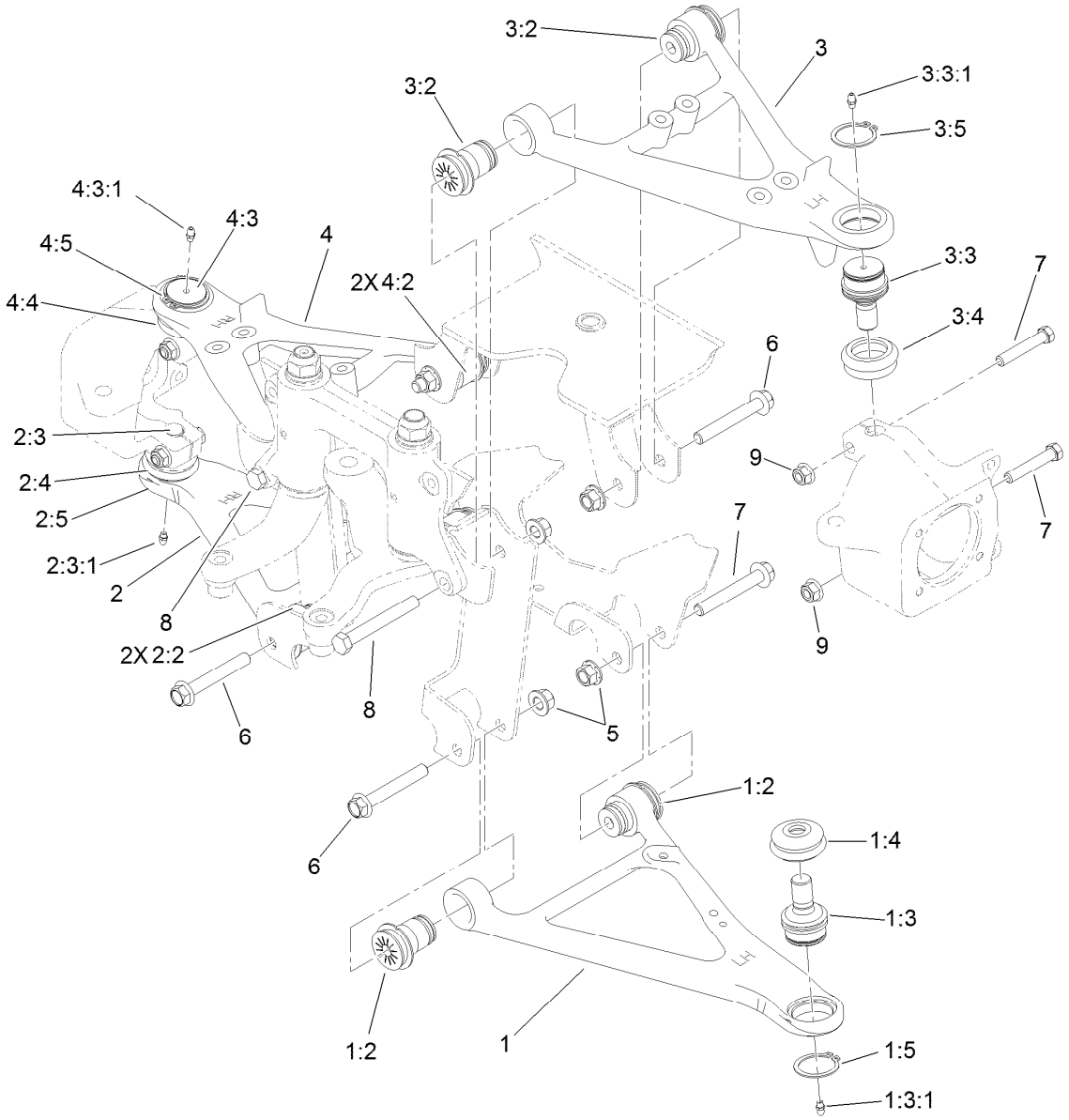


# Front Control Arm Assembly

| Ref. | Part Number | Qty. | Description |
|---|---|---|---|
| 1 | 115-2405 | 1 | Lower LH Control Arm ASM |
| 1:2 | 87-1450 | 2 | Bushing-Flange |
| 1:3 | 115-2165 | 1 | Ball Joint |
| 1:3:1 | 302-5 | 1 | Fitting-Grease |
| 1:4 | 87-2420 | 1 | Seal-Joint, Ball |
| 1:5 | 32151-104 | 1 | Ring-Retaining, External |
| 2 | 115-2407 | 1 | Lower RH Control Arm ASM |
| 2:2 | 87-1450 | 2 | Bushing-Flange |
| 2:3 | 115-2165 | 1 | Ball Joint |
| 2:3:1 | 302-5 | 1 | Fitting-Grease |
| 2:4 | 87-2420 | 1 | Seal-Joint, Ball |
| 2:5 | 32151-104 | 1 | Ring-Retaining, External |
| 3 | 115-2404 | 1 | Upper LH Control Arm ASM |
| 3:2 | 87-1450 | 2 | Bushing-Flange |
| 3:3 | 115-2165 | 1 | Ball Joint |

| Ref. | Part Number | Qty. | Description |
|---|---|---|---|
| 3:3:1 | 302-5 | 1 | Fitting-Grease |
| 3:4 | 87-2420 | 1 | Seal-Joint, Ball |
| 3:5 | 32151-104 | 1 | Ring-Retaining, External |
| 4 | 115-2406 | 1 | Upper RH Control Arm ASM |
| 4:2 | 87-1450 | 2 | Bushing-Flange |
| 4:3 | 115-2165 | 1 | Ball Joint |
| 4:3:1 | 302-5 | 1 | Fitting-Grease |
| 4:4 | 87-2420 | 1 | Seal-Joint, Ball |
| 4:5 | 32151-104 | 1 | Ring-Retaining, External |
| 5 | 99-5107 | 8 | Nut-Lock |
| 6 | 114-8419 | 6 | Screw-HHF |
| 7 | 324-10 | 4 | Screw-HH |
| 8 | 325-17 | 2 | Screw-HH |
| 9 | 114-8417 | 4 | Nut-HF, NI |

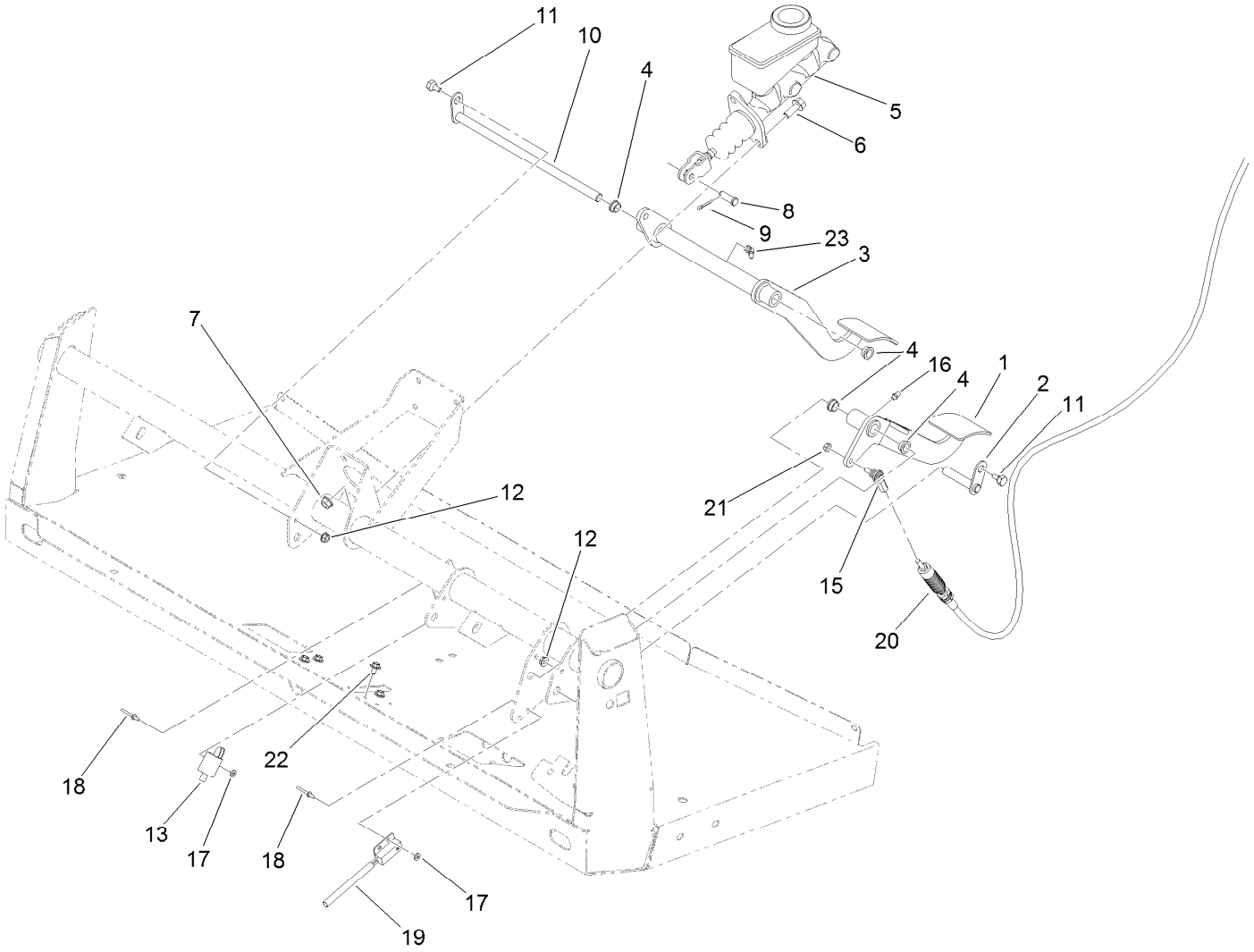


# Brake and Clutch Pedal Assembly

| Ref. | Part Number | Qty. | Description |
|---|---|---|---|
| 1 | 127-7357-03 | 1 | Pedal-Clutch |
| 2 | 115-2269 | 1 | Pin-Pivot |
| 3 | 120-5023-03 | 1 | Pedal-Brake |
| 4 | 256-156 | 4 | Bushing-Flange |
| 5 | 104-6782 | 1 | Master Cylinder ASM |
| 6 | 3234-11 | 2 | Screw-HHF |
| 7 | 3290-357 | 2 | Nut-HSF |
| 8 | 283-2 | 1 | Pin-Clevis |
| 9 | 3272-10 | 1 | Pin-Cotter |
| 10 | 137-6729 | 1 | Shaft-Brake |
| 11 | 63-3410 | 2 | Screw-Shoulder |

| Ref. | Part Number | Qty. | Description |
|---|---|---|---|
| 12 | 32128-33 | 2 | Nut-HF |
| 13 | 95-1653 | 1 | Switch-Pole, Single |
| 15 | 110-2554 | 1 | Rod End-Spherical |
| 16 | 302-5 | 1 | Fitting-Grease |
| 17 | 3256-21 | 4 | Washer-Flat |
| 18 | 3269-25 | 4 | Rivet-Pop |
| 19 | 105-0023 | 1 | Switch-Proximity |
| 20 | 115-2284 | 1 | Cable-Clutch |
| 21 | 3296-13 | 1 | Nut-Lock, NI |
| 22 | 46-6811 | 4 | Screw-HWH |
| 23 | 302-60 | 1 | Fitting-Grease |

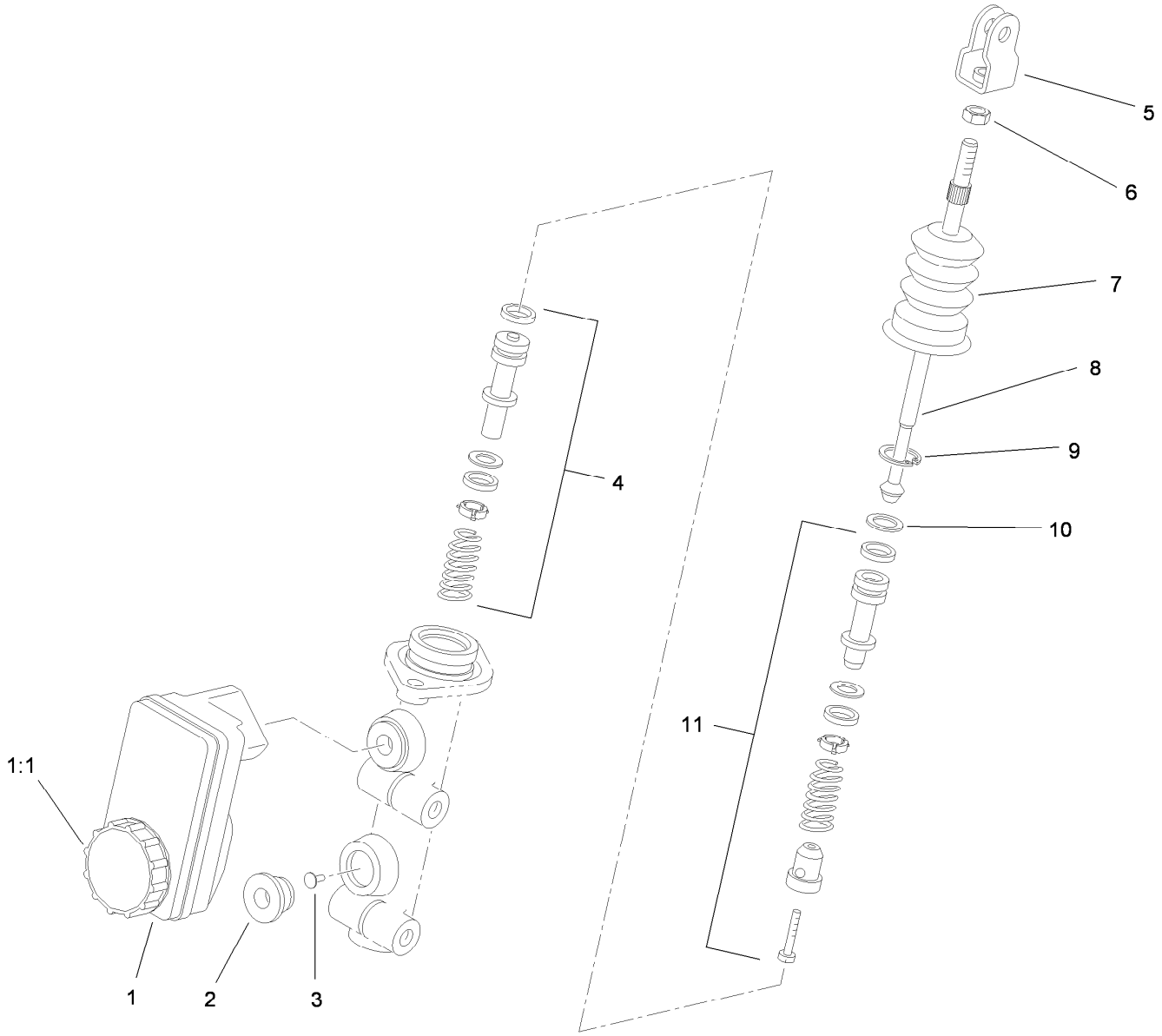


# Master Cylinder Assembly No. 104-6782

| *Ref.* | *Part Number* | *Qty.* | *Description* |
|---|---|---|---|
| 1 | 104-6845 | 1 | Reservoir ASM |
| 1:1 | 92-4112 | 1 | Cap ASM |
| 2 | 93-8971 | 2 | Seal-Port, Flange |
| 3 | 92-4103 | 1 | Pin-Stop |
| 4 | 92-4102 | 1 | Secondary Piston ASM |
| 5 | 92-4110 | 1 | Clevis |
| 6 | 21-0360 | 1 | Nut-Hex |
| 7 | 94-5209 | 1 | Cover-Dust |
| 8 | 94-5210 | 1 | Rod-Push |
| 9 | 92-4109 | 1 | Ring-Snap |
| 10 | 92-4108 | 1 | Retainer-Washer |
| 11 | 92-4101 | 1 | Primary Piston ASM |

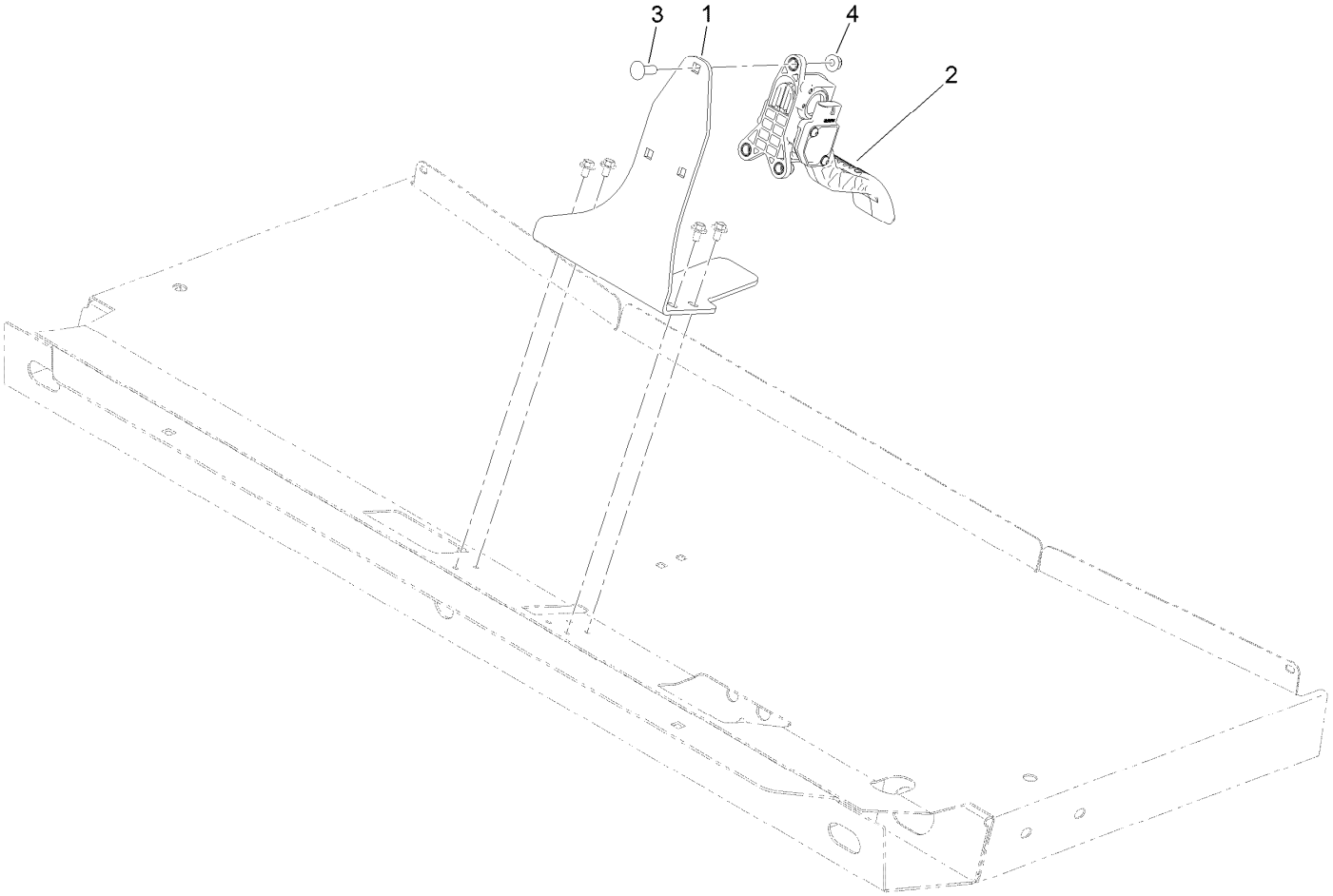


# Accelerator Assembly

| Ref. | Part Number | Qty. | Description |
|---|---|---|---|
| 1 | 132-6711-03 | 1 | Bracket-Mount, Pedal |
| 2 | 121-9675 | 1 | Pedal-Accelerator |
| 3 | 3230-22 | 3 | Screw-CARR |
| 4 | 104-8300 | 3 | Nut-HF, NI |

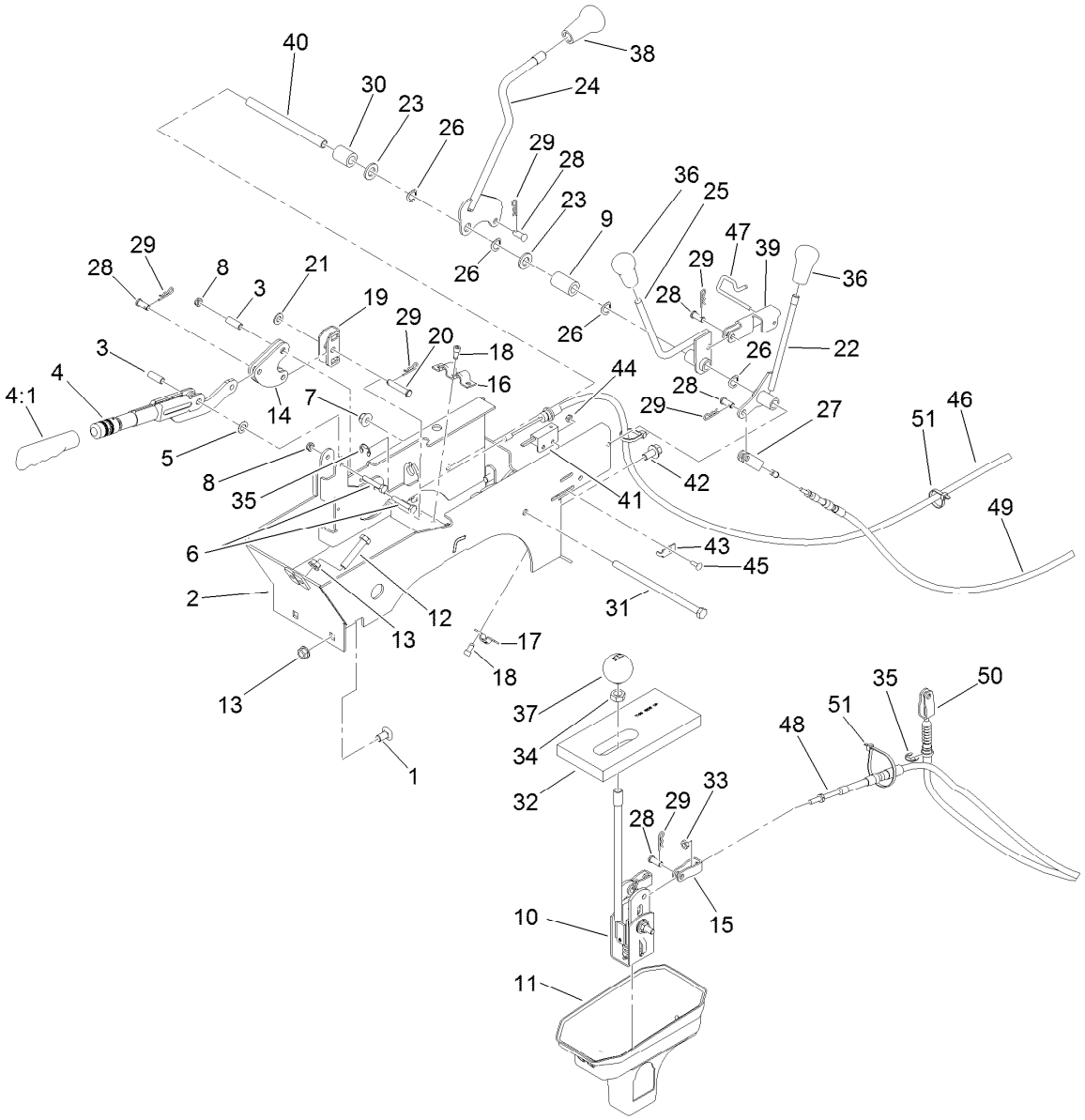


# Console Assembly

| Ref. | Part Number | Qty. | Description |
|---|---|---|---|
| 1 | 3231-21 | 2 | Screw-CARR |
| 2 | 108-6914-03 | 1 | Support-Lever |
| 3 | 114402 | 2 | Spacer |
| 4 | 127-8863 | 1 | Lever-Brake, Park |
| 4:1 | 127-8864 | 1 | Grip-Handle |
| 5 | 3290-477 | 1 | Washer-Curved |
| 6 | 321-9 | 2 | Screw-HH |
| 7 | 104-8301 | 1 | Nut-HF, NI |
| 8 | 3296-56 | 2 | Nut-Lock, NI |
| 9 | 120-5037 | 1 | Spacer |
| 10 | 106-7887 | 1 | Shift ASM |
| 11 | 106-2376 | 1 | Boot-Shift, Lower |
| 12 | 323-10 | 2 | Screw-HH |
| 13 | 3290-357 | 4 | Nut-HSF |
| 14 | 106-7814 | 2 | Bellcrank |
| 15 | 87-2310 | 2 | Clevis-Cable |
| 16 | 87-4960 | 1 | Clamp-Cable |
| 17 | 87-4340 | 1 | Clamp-Cable |
| 18 | 65-5220 | 5 | Screw-HSH, Thread Forming |
| 19 | 87-3480 | 1 | Bracket-Equalizer, Cable |

| Ref. | Part Number | Qty. | Description |
|---|---|---|---|
| 20 | 94-3829 | 1 | Pin-Clevis |
| 21 | 3256-23 | 1 | Washer-Plain |
| 22 | 106-7828 | 1 | Lever |
| 23 | 33096-00 | 2 | Washer-Flat |
| 24 | 131-3479 | 1 | Lever-Lock, Differential |
| 25 | 106-7960 | 1 | Lever-HYD |
| 26 | 3290-221 | 4 | Washer-Spring |
| 27 | 87-7160 | 1 | Clevis-Cable |
| 28 | 283-62 | 6 | Pin-Clevis |
| 29 | 3290-307 | 7 | Pin-Cotter |
| 30 | 66-6501 | 1 | Spacer-Wheel |
| 31 | 323-36 | 1 | Screw-HH |
| 32 | 87-6570 | 1 | Seal-Boot, Lower |
| 33 | 3220-1 | 2 | Nut-Jam |
| 34 | 3218-18 | 1 | Nut-Jam |
| 35 | 32120-47 | 3 | Ring-Retaining, External |
| 36 | 106-7903 | 2 | Knob-Control |
| 37 | 87-6720 | 1 | Knob-Shift |
| 38 | 106-7952 | 1 | Knob |
| 39 | 115-2250 | 1 | Link |
| 40 | 106-7833 | 1 | Spacer |

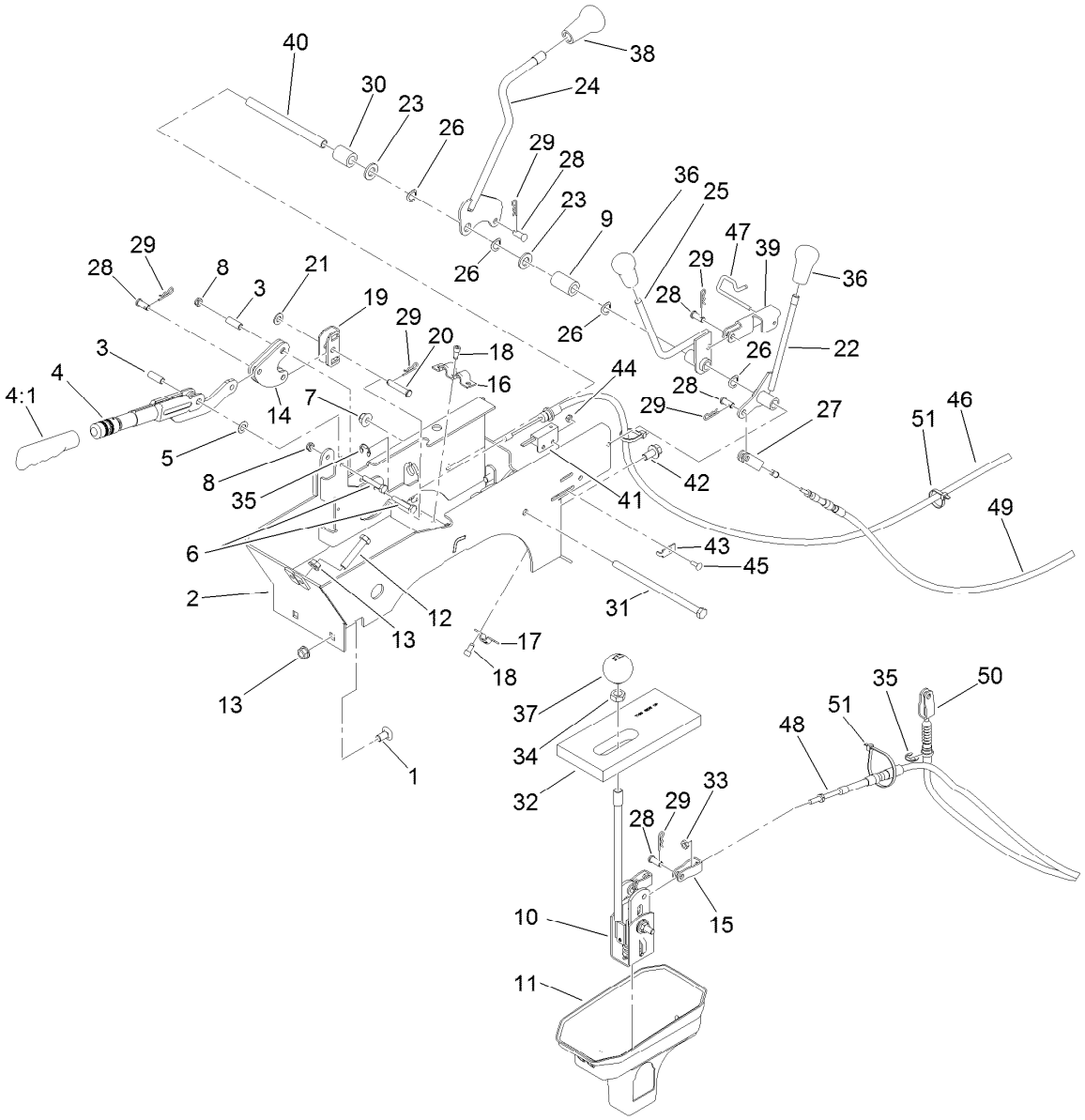


# Console Assembly (continued)

| Ref. | Part Number | Qty. | Description |
|---|---|---|---|
| 41 | 100-1270 | 1 | Switch-Proximity |
| 42 | 3234-12 | 2 | Screw-HHF |
| 43 | 100-4872 | 1 | Plate-Switch, Neutral |
| 44 | 3296-12 | 1 | Nut-Lock, NI |
| 45 | 3229-34 | 1 | Screw-CARR |
| 46 | 115-2283 | 2 | Cable-Brake, Park |

| Ref. | Part Number | Qty. | Description |
|---|---|---|---|
| 47 | 115-2350 | 1 | Pin-Retainer |
| 48 | 121-6327 | 2 | Cable-Selector, Gear |
| 49 | 115-7812 | 1 | Cable-Hi Low |
| 50 | 115-2287 | 1 | Cable-Lock, Differential |
| 51 | 3290-379 | 5 | Tie-Cable |

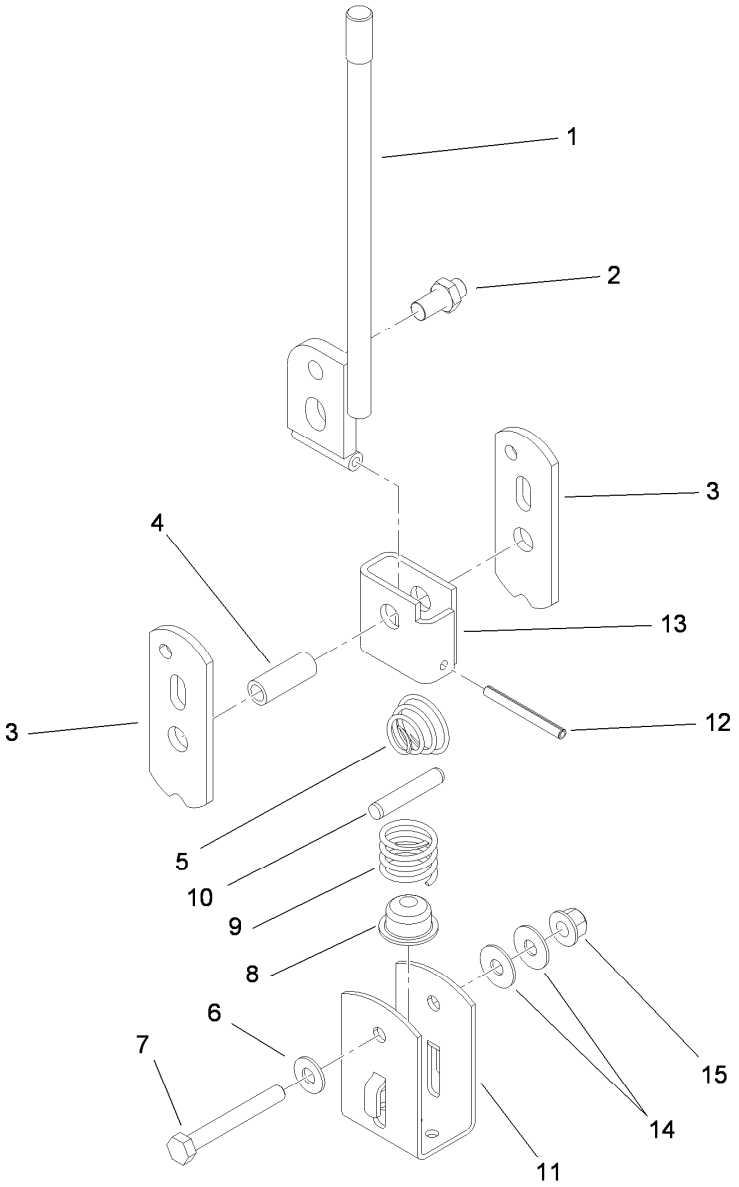


# Shift Assembly No. 106-7887

| Ref. | Part Number | Qty. | Description |
|---|---|---|---|
| 1 | 131-3469 | 1 | Lever-Shift |
| 2 | 87-3650 | 1 | Pin-Shift |
| 3 | 87-3540 | 2 | Link-Shift |
| 4 | 87-2520 | 1 | Tube-Pivot |
| 5 | 87-2900 | 1 | Spring-Compression |
| 6 | 87-8640 | 1 | Washer-Flat |
| 7 | 322-12 | 1 | Screw-HH |
| 8 | 87-3530 | 1 | Button-Shifter |
| 9 | 87-3660 | 1 | Spring-Compression |
| 10 | 3290-507 | 1 | Pin-Dowel |
| 11 | 87-3520 | 1 | Clevis |
| 12 | 32121-48 | 1 | Pin-Spring |
| 13 | 87-6040 | 1 | Bracket-Shifter |
| 14 | 3290-456 | 2 | Washer-Belleville |
| 15 | 104-8300 | 1 | Nut-HF, NI |

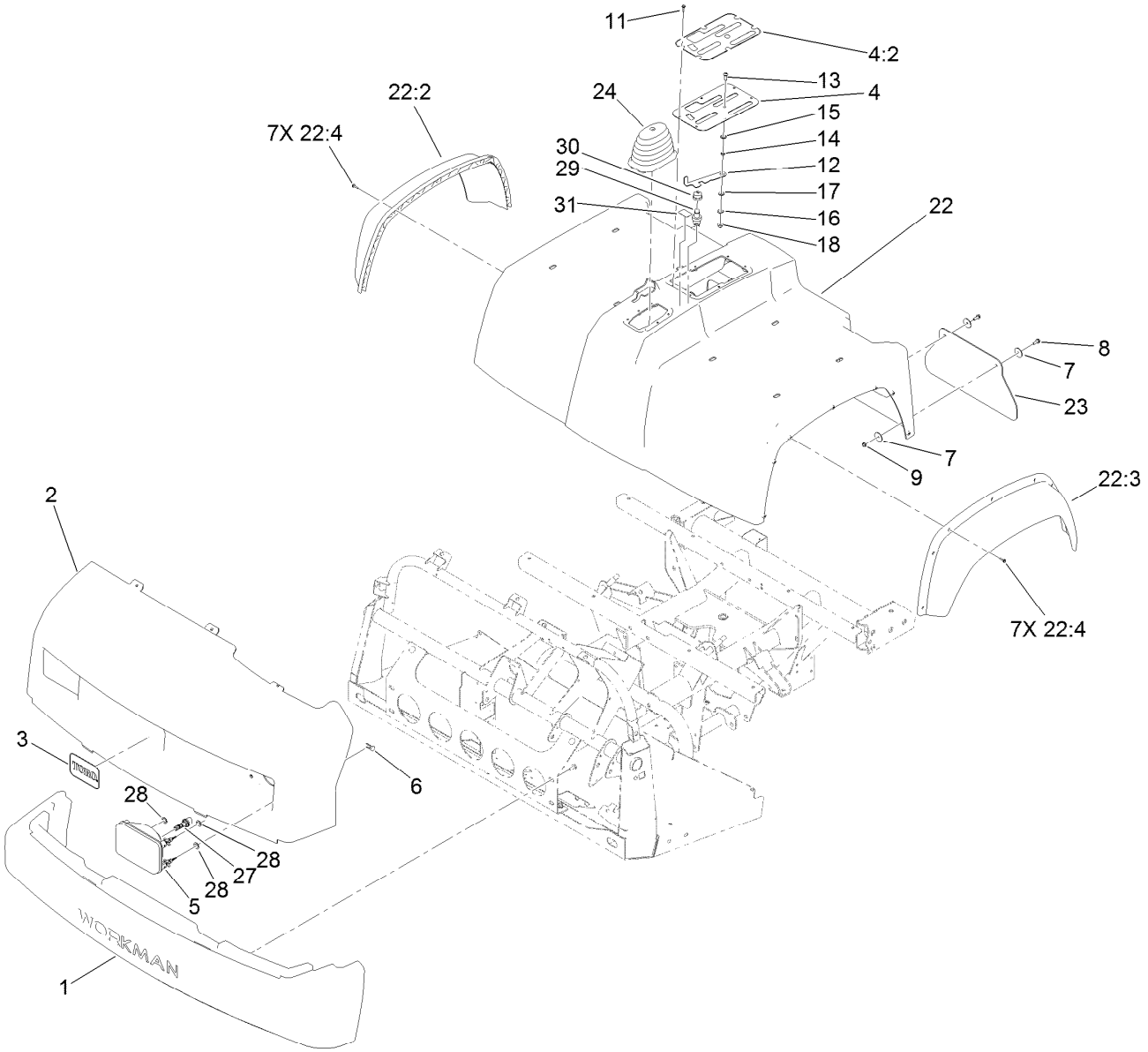


# Bumper, Hood and Seat Base Assembly

| Ref. | Part Number | Qty. | Description |
|---|---|---|---|
| 1 | 112-3185 | 1 | Bumper |
| 2 | 132-6797 | 1 | Hood |
| 3 | 117-4950 | 1 | Decal |
| 4 | 106-7886 | 1 | Control Plate ASM |
| 4:2 | 106-2377 | 1 | Decal-Console |
| 5 | 136-6318 | 2 | Housing-Headlight, 12V |
| 6 | 114-8341 | 6 | Clip-Speed |
| 7 | 3256-55 | 8 | Washer-Flat |
| 8 | 3234-4 | 4 | Screw-HHF |
| 9 | 104-7201 | 4 | Nut-HF, NI |
| 11 | 98-1375 | 6 | Screw-HWH |
| 12 | 106-7984 | 1 | Lever-Detent |
| 13 | 3274-55 | 1 | Screw-HSBH |
| 14 | 82-4240 | 1 | Spacer-Bearing |
| 15 | 94-8196 | 1 | Washer-Nylon |

| Ref. | Part Number | Qty. | Description |
|---|---|---|---|
| 16 | 3290-221 | 1 | Washer-Spring |
| 17 | 3256-23 | 1 | Washer-Plain |
| 18 | 104-8300 | 1 | Nut-HF, NI |
| 22 | 133-0566 | 1 | Seatbase ASM |
| 22:2 | 114-8407 | 1 | Fender-Front, RH |
| 22:3 | 114-8408 | 1 | Fender-Front, LH |
| 22:4 | 117-5036 | 14 | Screw-Plastic, HWH |
| 23 | 106-2378 | 2 | Mudflap |
| 24 | 117-8063 | 1 | Boot-Shift |
| 27 | 133-0574 | 2 | Bulb-LED |
| 28 | 112-6957 | 6 | Washer-Hardened |
| 29 | 112-3324 | 1 | Switch-Horn |
| 30 | 112-3313 | 1 | Nut-Weatherproof |
| 31 | 137-9896 | 1 | Decal-4X4 Enable |

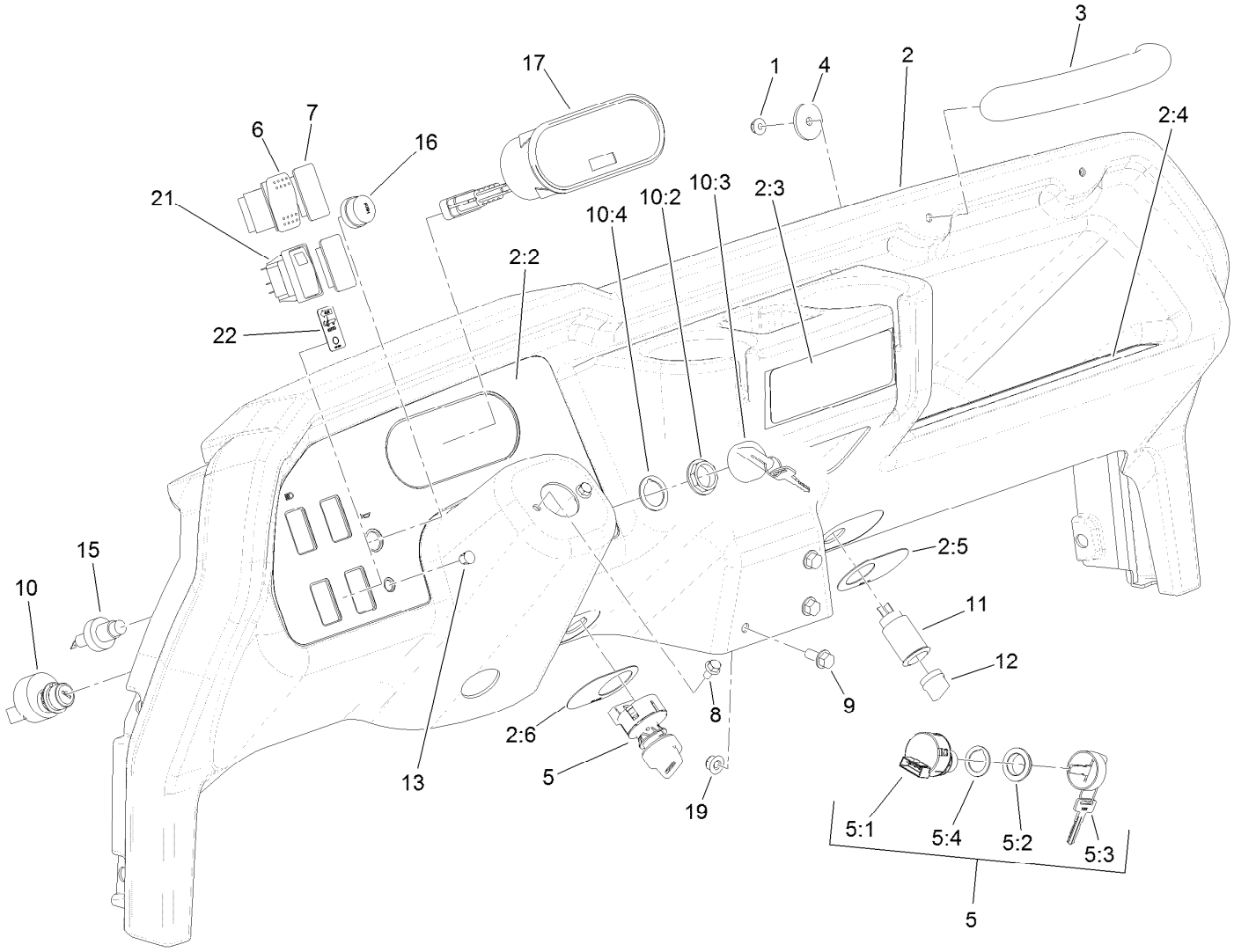


# Dash Assembly

| Ref. | Part Number | Qty. | Description |
|---|---|---|---|
| 1 | 104-7201 | 2 | Nut-HF, NI |
| 2 | 115-7912 | 1 | Dash ASM |
| 2:2 | 138-3523 | 1 | Decal-Panel, Control |
| 2:3 | 121-9776 | 1 | Decal-Danger, Vehicle (CE) |
| 2:4 | 115-2282 | 1 | Decal-Warning, Dash |
| 2:5 | 106-2353 | 1 | Decal-Powerpoint |
| 2:6 | 106-2355 | 1 | Decal-Switch, Supervisor |
| 3 | 117-4948 | 1 | Handle-Grab |
| 4 | 103995 | 2 | Washer |
| 5 | 110-2580 | 1 | Switch-Key, Supervisor |
| 5:1 | | 1 | Switch-Key ● |
| 5:2 | 108-8660 | 1 | Nut-Mounting |
| 5:3 | 110-5221 | 1 | Set-Key, Supervisor |
| 5:4 | 108-8659 | 1 | Washer-Backup |
| 6 | 95-8999 | 1 | Switch |
| 7 | 99-7420 | 2 | Plug-Hole |

| Ref. | Part Number | Qty. | Description |
|---|---|---|---|
| 8 | 33103-012 | 2 | Screw-HHF |
| 9 | 3234-5 | 3 | Screw-HHF |
| 10 | 106-5269 | 1 | Ignition Switch ASM |
| 10:2 | 108-8660 | 1 | Nut-Mounting |
| 10:3 | 106-5270 | 1 | Ignition Key Set |
| 10:4 | 108-8659 | 1 | Washer-Backup |
| 11 | 99-7411 | 1 | Point-Power |
| 12 | 99-7416 | 1 | Cap |
| 13 | 104-9368 | 1 | Plug-Dome |
| 15 | 112-3324 | 1 | Switch-Horn |
| 16 | 112-3313 | 1 | Nut-Weatherproof |
| 17 | 138-3564 | 1 | Cluster-Instrument |
| 19 | 104-8300 | 3 | Nut-HF, NI |
| 21 | 104-9007 | 1 | Switch-Rocker |
| 22 | 137-9895 | 1 | Decal-4Wd Auto |

● Not serviced separately

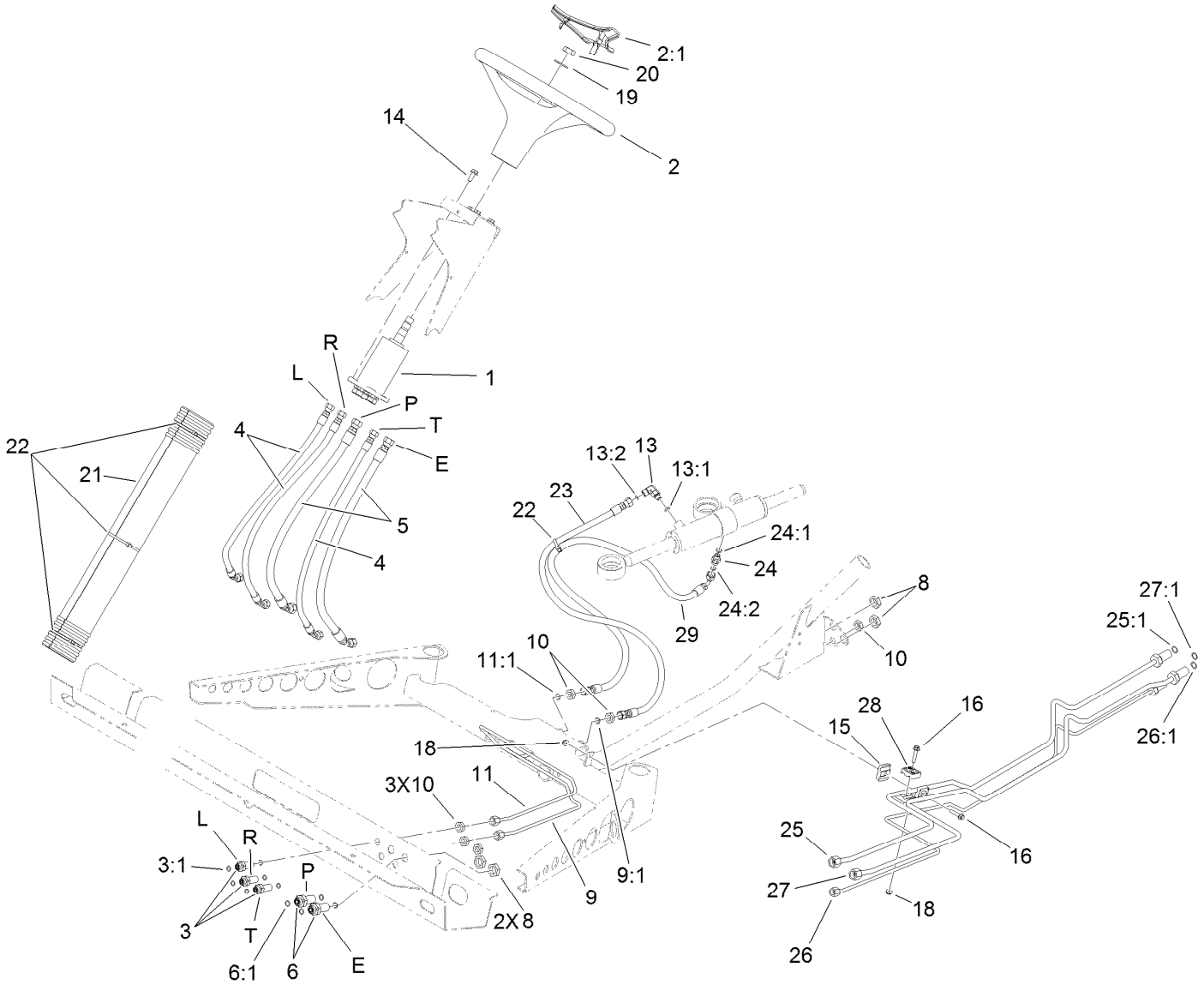


# Steering Hydraulic Assembly

| Ref. | Part Number | Qty. | Description |
|---|---|---|---|
| 1 | 120-4813 | 1 | Pump-Steering |
| 2 | 98-1471 | 1 | Wheel-Steering |
| 2:1 | 98-1468 | 1 | Cover-Wheel, Steering |
| 3 | 94-1444 | 3 | Union-Bulkhead |
| 3:1 | 237-21 | 2 | O-Ring |
| 4 | 106-7974 | 3 | Hose-HYD |
| 5 | 106-7975 | 2 | Hose-HYD |
| 6 | 340-71 | 2 | Fitting-Straight, Bulkhead |
| 6:1 | 237-22 | 2 | O-Ring |
| 8 | 340-70 | 4 | Nut-Lock |
| 9 | 106-7804 | 1 | Tube-HYD |
| 9:1 | 237-21 | 1 | O-Ring |
| 10 | 3219-10 | 6 | Nut-Hex |
| 11 | 106-7806 | 1 | Tube-HYD |
| 11:1 | 237-21 | 1 | O-Ring |
| 13 | 340-132 | 1 | Fitting-Elbow, 90 DEG |
| 13:1 | 237-78 | 1 | O-Ring |
| 13:2 | 237-21 | 1 | O-Ring |
| 14 | 98-7977 | 4 | Screw-HHF |

| Ref. | Part Number | Qty. | Description |
|---|---|---|---|
| 15 | 106-7839 | 2 | Clamp-Tube |
| 16 | 3234-21 | 2 | Screw-HHF |
| 18 | 104-7201 | 2 | Nut-HF, NI |
| 19 | 3256-27 | 1 | Washer-Flat |
| 20 | 3296-33 | 1 | Nut-Lock, NI |
| 21 | 106-6713 | 1 | Cover-Lines, Steering |
| 22 | 3290-379 | 4 | Tie-Cable |
| 23 | 108-6505 | 1 | Hose-HYD |
| 24 | 340-92 | 1 | Fitting-Straight |
| 24:1 | 237-78 | 1 | O-Ring |
| 24:2 | 237-21 | 1 | O-Ring |
| 25 | 115-7701 | 1 | Tube-HYD |
| 25:1 | 237-22 | 1 | O-Ring |
| 26 | 115-7702 | 1 | Tube-HYD |
| 26:1 | 237-22 | 1 | O-Ring |
| 27 | 115-7703 | 1 | Tube-HYD |
| 27:1 | 237-21 | 1 | O-Ring |
| 28 | 56-7973 | 2 | Clamp-Tube |
| 29 | 117-4861 | 1 | Hose-HYD |

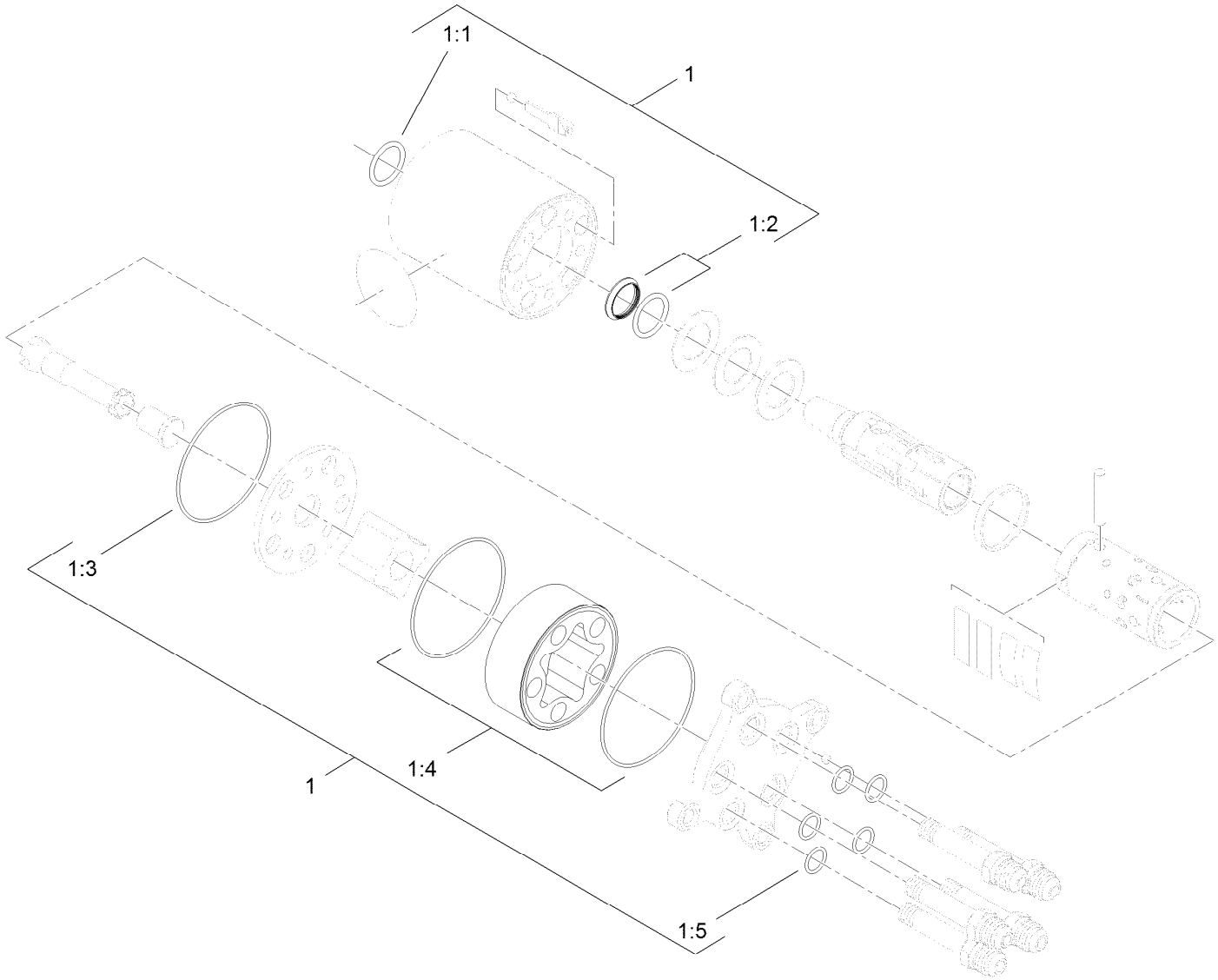


# Steering Valve Assembly No. 120-4813

| *Ref.* | *Part Number* | *Qty.* | *Description* |
|---|---|---|---|
| 1 | 106-6716 | 1 | Seal Kit |
| 1:1 | | 1 | Ring-Seal, Dust ● |
| 1:2 | | 1 | Seal-Shaft ● |
| 1:3 | | 1 | O-Ring ● |
| 1:4 | | 2 | O-Ring ● |
| 1:5 | | 5 | O-Ring ● |

● Not serviced separately

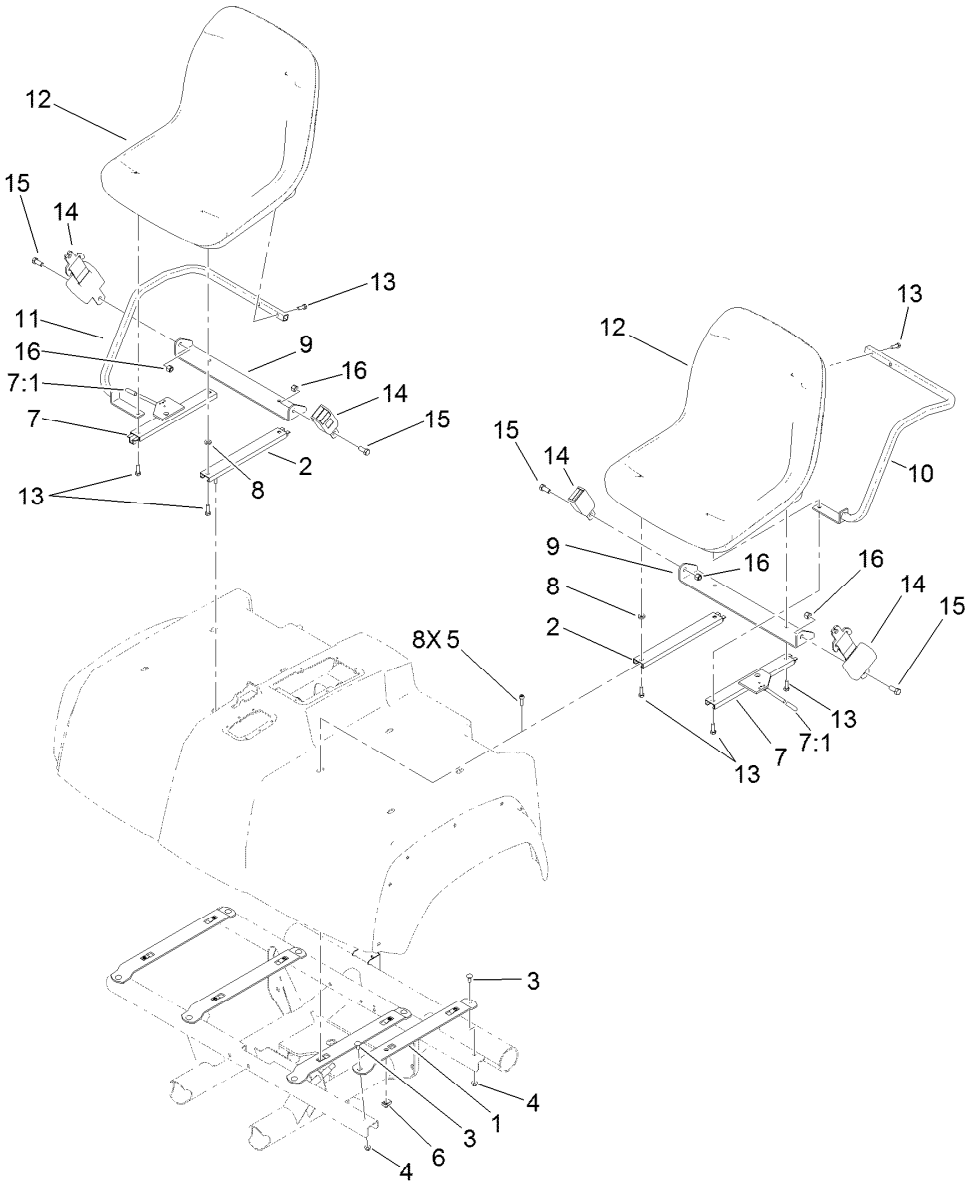


# Seat Assembly

| Ref. | Part Number | Qty. | Description |
|---|---|---|---|
| 1 | 115-2435-03 | 4 | Bracket-Seat |
| 2 | 119-0655 | 2 | Adjuster-Seat, Non Locking |
| 3 | 3230-1 | 8 | Bolt-CARR |
| 4 | 104-8300 | 8 | Nut-HF, NI |
| 5 | 3274-22 | 8 | Screw-HSH |
| 6 | 115-7721 | 8 | Nut-Clip, U |
| 7 | 121-9763 | 2 | Adjuster-Seat, Locking |
| 7:1 | 2410-49 | 1 | Cap-Vinyl |
| 8 | 104-7658 | 2 | Spacer |

| Ref. | Part Number | Qty. | Description |
|---|---|---|---|
| 9 | 119-0727-03 | 2 | Bracket-Belt, Seat |
| 10 | 119-0731-03 | 1 | Armrest-LH |
| 11 | 119-0732-03 | 1 | Armrest-RH |
| 12 | 133-0577 | 2 | Seat ASM |
| 13 | 33114-030 | 12 | Screw-HH |
| 14 | 110-0413 | 2 | Seatbelt-Retractable |
| 15 | 3212-4 | 4 | Screw-HH |
| 16 | 3296-7 | 4 | Nut-Lock |

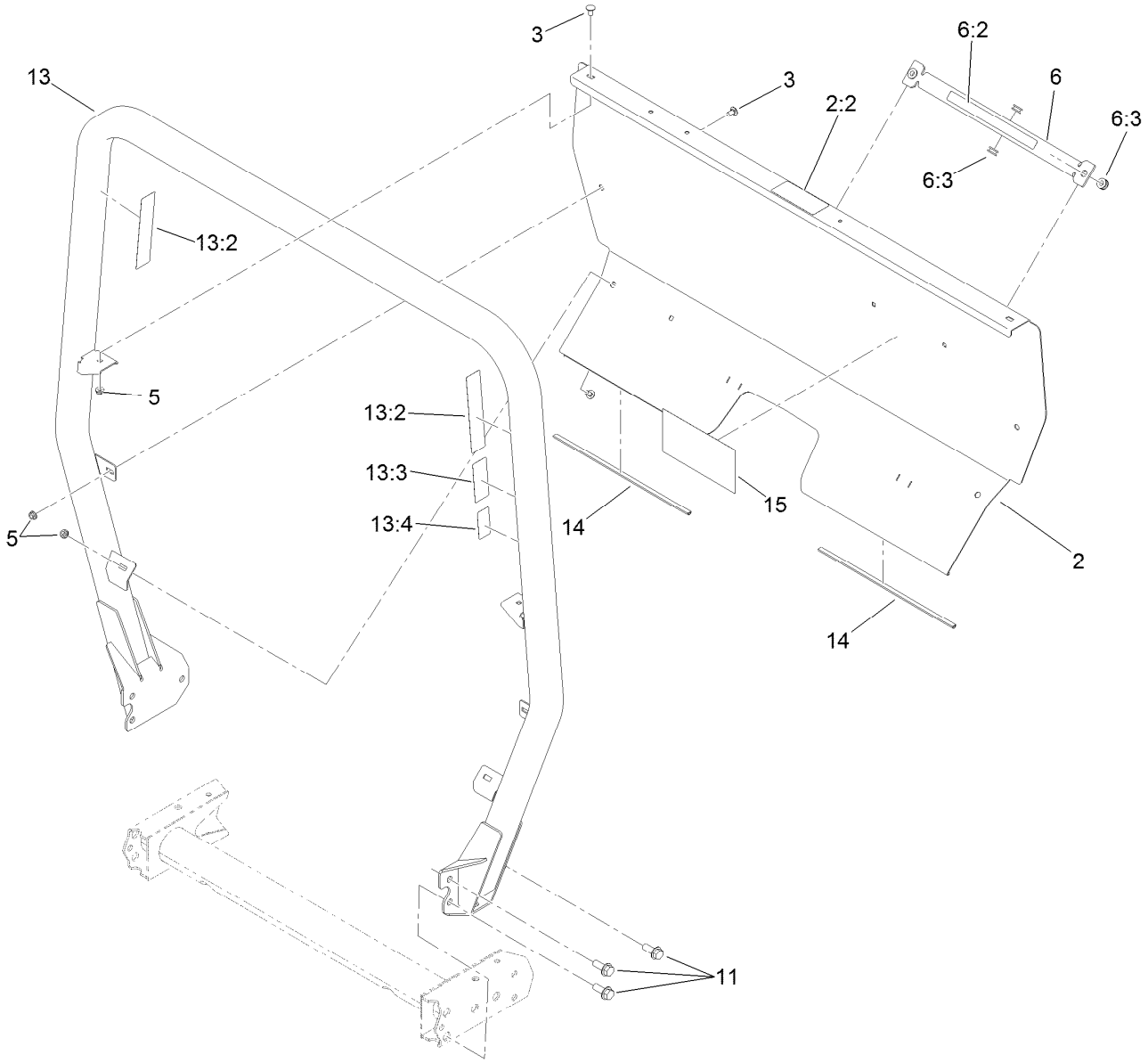


# Roll-Over Protection System Assembly

| Ref. | Part Number | Qty. | Description |
|---|---|---|---|
| 2 | 115-2213 | 1 | ROPS Cover ASM |
| 2:2 | 105-4215 | 1 | Decal-Caution |
| 3 | 3230-18 | 6 | Screw-CARR |
| 5 | 32128-20 | 6 | Nut-HF |
| 6 | 105-7960 | 1 | Bed Support ASM |
| 6:2 | 93-9852 | 1 | Decal-Warning |
| 6:3 | 92-5972 | 4 | Grommet-Rubber |
| 11 | 3234-38 | 6 | Screw-HHF |
| 13 | 115-7910 | 1 | ROPS ASM |
| 13:2 | 106-7767 | 2 | Decal-ROPS |
| 13:3 | 93-9850 | 1 | Decal-ROPS, CE |
| 13:4 | 117-4969 | 1 | Decal-ROPS, ISO |
| 14 | 127-7382 | 2 | Seal-ROPS |
| 15 | 115-7814 | 1 | Decal-Reference, Quick |

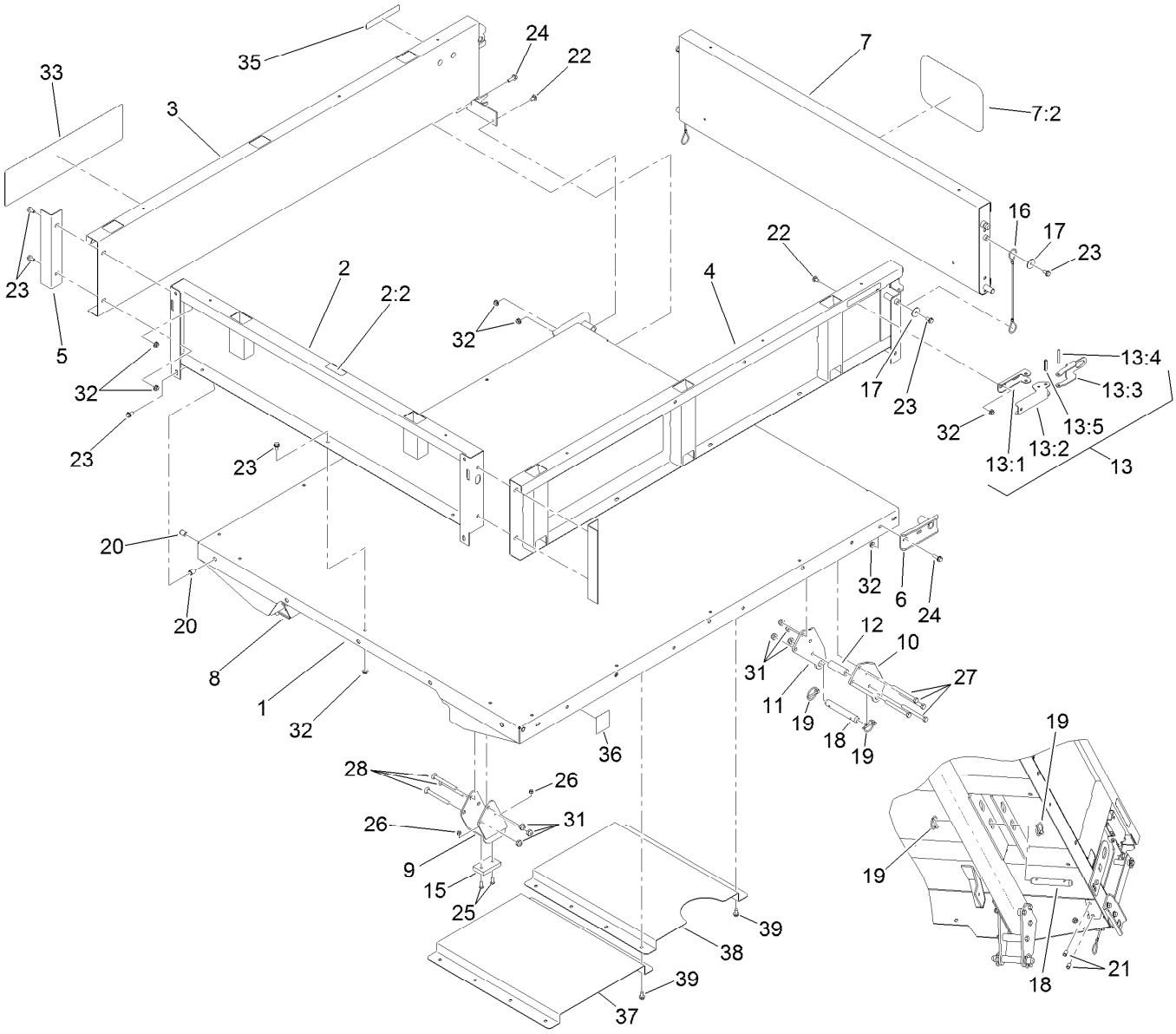


# Full Bed and Side Panel Assembly

| Ref. | Part Number | Qty. | Description |
|---|---|---|---|
| 1 | 93-9724-03 | 1 | Flatbed-Full |
| 2 | 133-0645 | 1 | Front Panel ASM |
| 2:2 | 115-7739 | 1 | Decal-No Riders |
| 3 | 133-0617 | 1 | Panel-Side, RH |
| 4 | 133-0616 | 1 | Panel-Side, LH |
| 5 | 92-1320-03 | 2 | Angle-Side |
| 6 | 92-1265-03 | 2 | Bracket-Pivot |
| 7 | 133-0644 | 1 | Tailgate |
| 7:2 | 105-4222 | 1 | Decal |
| 8 | 106-2423-03 | 1 | Bracket-Spacer, RH |
| 9 | 106-2422-03 | 1 | Bracket-Spacer, LH |
| 10 | 93-9720-03 | 2 | Bracket-Pivot, Long (LH) |
| 11 | 93-9721-03 | 2 | Bracket-Pivot, Long (RH) |
| 12 | 93-9575 | 2 | Tube-Pivot, Flatbed |
| 13 | 99-1123 | 2 | Latch ASM |
| 13:1 | 92-1271 | 1 | Pivot-Latch |
| 13:2 | 99-1113 | 1 | Handle-Latch |
| 13:3 | 99-1112 | 1 | Plate-Retainer |
| 13:4 | 32121-78 | 1 | Pin-Roll |
| 13:5 | 32121-25 | 1 | Pin-Roll |
| 15 | 93-9719 | 2 | Block-Wear |

| Ref. | Part Number | Qty. | Description |
|---|---|---|---|
| 16 | 93-9595 | 2 | Lanyard |
| 17 | 3256-57 | 4 | Washer-Flat |
| 18 | 92-1233 | 4 | Pin-Clevis |
| 19 | 92-1298 | 8 | Pin-Lynch |
| 20 | 32148-7 | 4 | Nut-Clinch |
| 21 | 32148-6 | 4 | Nut-Clinch |
| 22 | 3230-18 | 6 | Screw-CARR |
| 23 | 3234-7 | 21 | Screw-HHF |
| 24 | 3234-29 | 6 | Screw-HHF |
| 25 | 3250-45 | 4 | Screw-SPH |
| 26 | 3296-42 | 4 | Nut-Lock, NI |
| 27 | 323-42 | 8 | Screw-HH |
| 28 | 3231-24 | 6 | Screw-CARR |
| 31 | 3296-44 | 14 | Nut-Lock, NI |
| 32 | 32128-20 | 27 | Nut-HF |
| 33 | 115-7916 | 2 | Decal |
| 35 | 93-9868 | 2 | Decal-Caution |
| 36 | 93-9899 | 2 | Decal-Warning |
| 37 | 121-6300 | 1 | Shield-Heat, Bed (Front) |
| 38 | 121-6301 | 1 | Shield-Heat, Bed (Rear) |
| 39 | 32144-70 | 12 | Screw-HWHTF |

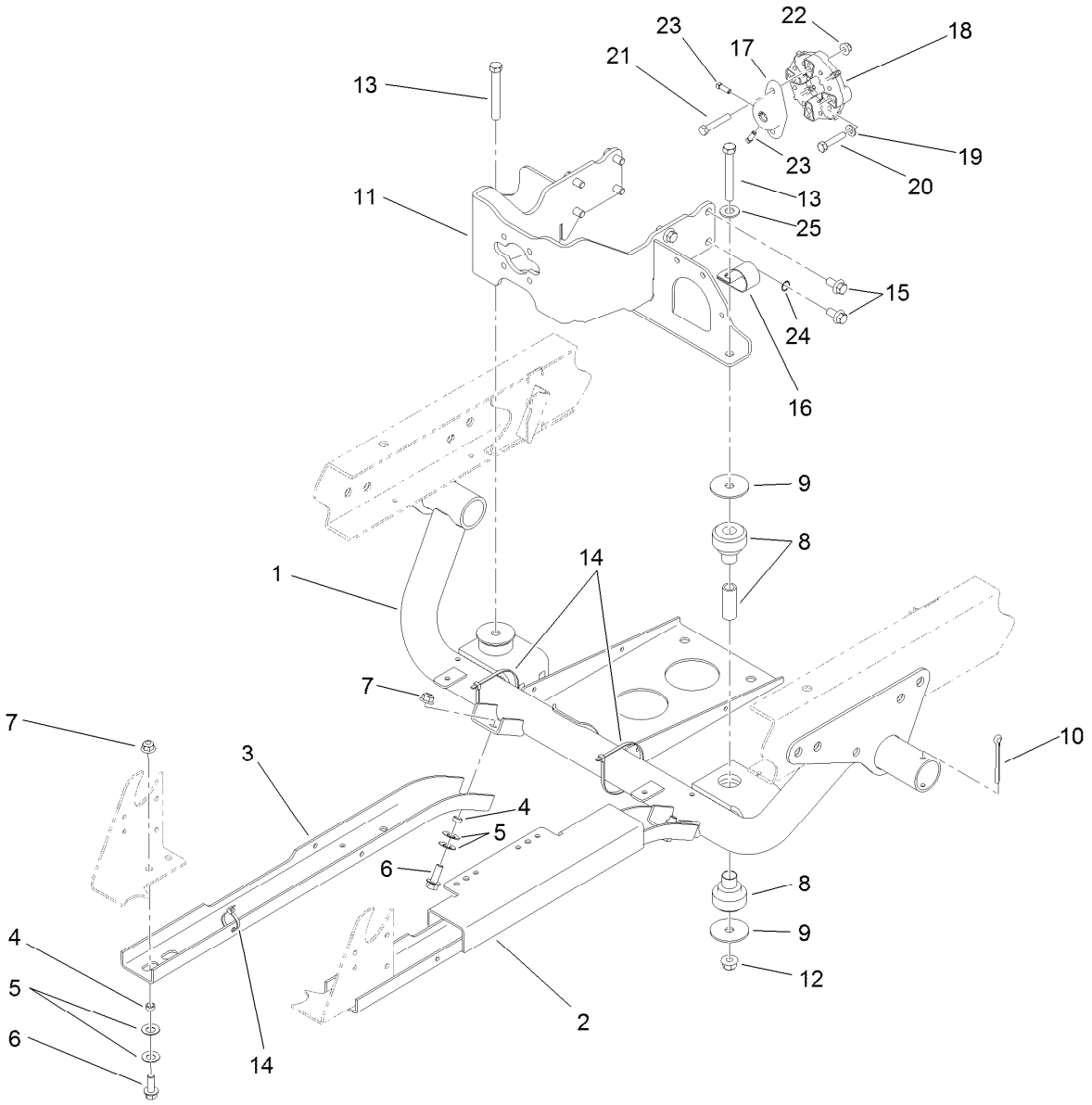


# Engine Sub Frame Assembly

| Ref. | Part Number | Qty. | Description |
|---|---|---|---|
| 1 | 119-9679-03 | 1 | Support-Engine |
| 2 | 115-2215-03 | 1 | Guard-LH |
| 3 | 87-4730-03 | 1 | Guard-Belly |
| 4 | 76-9100 | 6 | Spacer |
| 5 | 3290-413 | 12 | Washer-Belleville |
| 6 | 3234-11 | 6 | Screw-HHF |
| 7 | 104-8301 | 6 | Nut-HF, NI |
| 8 | 106-7865 | 2 | Mount-Engine |
| 9 | 87-5100 | 4 | Washer-Snubbing |
| 10 | 3272-37 | 2 | Pin-Cotter |
| 11 | 121-6259-03 | 1 | Mount-Pump, Engine |
| 12 | 114-8417 | 2 | Nut-HF, NI |
| 13 | 324-13 | 2 | Screw-HH |

| Ref. | Part Number | Qty. | Description |
|---|---|---|---|
| 14 | 3290-379 | 4 | Tie-Cable |
| 15 | 120-4839 | 8 | Screw-HHF |
| 16 | 2412-82 | 1 | Clamp-R |
| 17 | 115-2169 | 1 | Hub-Pump |
| 18 | 119-0652 | 1 | Coupler-Rubber |
| 19 | 3256-23 | 2 | Washer-Plain |
| 20 | 33114-040 | 2 | Screw-HH |
| 21 | 322-21 | 2 | Screw-HH |
| 22 | 104-8300 | 2 | Nut-HF, NI |
| 23 | 3241-6 | 2 | Screw-SQH |
| 24 | 3254-20 | 1 | Washer-Lock, Int |
| 25 | 3256-26 | 1 | Washer-Flat |

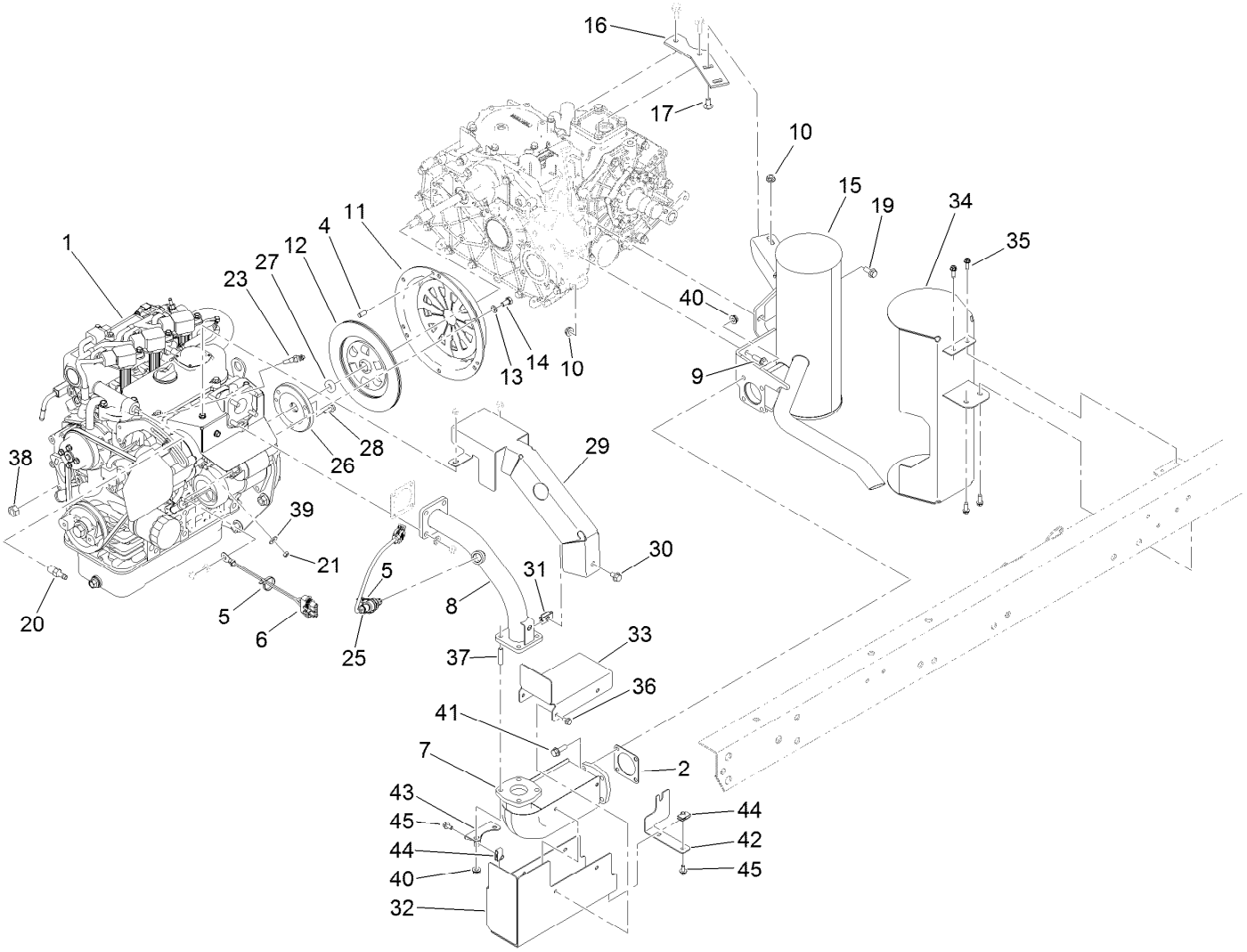


# Engine and Exhaust Assembly

| Ref. | Part Number | Qty. | Description |
|---|---|---|---|
| 1 | 120-4880 | 1 | Engine ASM |
| 2 | 105-4209 | 1 | Gasket-Muffler |
| 4 | 42-7160 | 3 | Pin |
| 5 | 3290-379 | 2 | Tie-Cable |
| 6 | 99-3441 | 1 | Harness-Wire, Fusible Link |
| 7 | 125-9118 | 1 | Converter-Catalytic (F/W Engine) |
| 8 | 121-6291 | 1 | Pipe-Exhaust |
| 9 | 3234-17 | 2 | Screw-HHF |
| 10 | 32128-20 | 4 | Nut-HF |
| 11 | 87-4690 | 1 | Cover-Clutch |
| 12 | 87-4700 | 1 | Disc-Clutch |
| 13 | 3253-4 | 6 | Washer-Lock |
| 14 | 33114-016 | 6 | Screw-HH |
| 15 | 133-0613 | 1 | Muffler |
| 16 | 105-9472 | 1 | Plate-Mount, Muffler |
| 17 | 3230-2 | 2 | Bolt-CARR |
| 19 | 98-7977 | 1 | Screw-HHF |
| 20 | 115-1448 | 1 | Fitting-Straight |
| 21 | 33013-00 | 1 | Nut-Hex |
| 23 | 120-5075 | 1 | Sender-Temperature |
| 25 | 121-3511 | 1 | Sensor-O2 F/W |
| 26 | 120-5006 | 1 | Holder-Bearing, Pilot |
| 27 | 115-6870 | 1 | Bearing-Ball, Sealed |
| 28 | 33103-020 | 3 | Screw-HHF |
| 29 | 121-6305 | 1 | Shield-Exhaust |
| 30 | 3234-30 | 1 | Screw-HHF |
| 31 | 110-3510 | 1 | Nut-Retainer |
| 32 | 121-6307 | 1 | Shield-Heat, Lower |
| 33 | 121-6308 | 1 | Shield-Heat, Upper |
| 34 | 121-6302 | 1 | Shield-Heat, Muffler |
| 35 | 49-2040 | 4 | Screw-HWHTF |
| 36 | 33103-012 | 4 | Screw-HHF |
| 37 | 121-6289 | 4 | Stud-Exhaust |
| 38 | 110-8815 | 1 | Nut-Hex |
| 39 | 3256-2 | 1 | Washer-Flat |
| 40 | 121-6322 | 8 | Nut-HF, Serrated |
| 41 | 121-6324 | 4 | Screw-HHF |
| 42 | 121-6328 | 1 | Mount-Muffler, Heat Shield |
| 43 | 121-6329 | 1 | Mount-Muffler, Heat Shield |
| 44 | 107069 | 3 | Clip |
| 45 | 3234-13 | 3 | Screw-HHF |

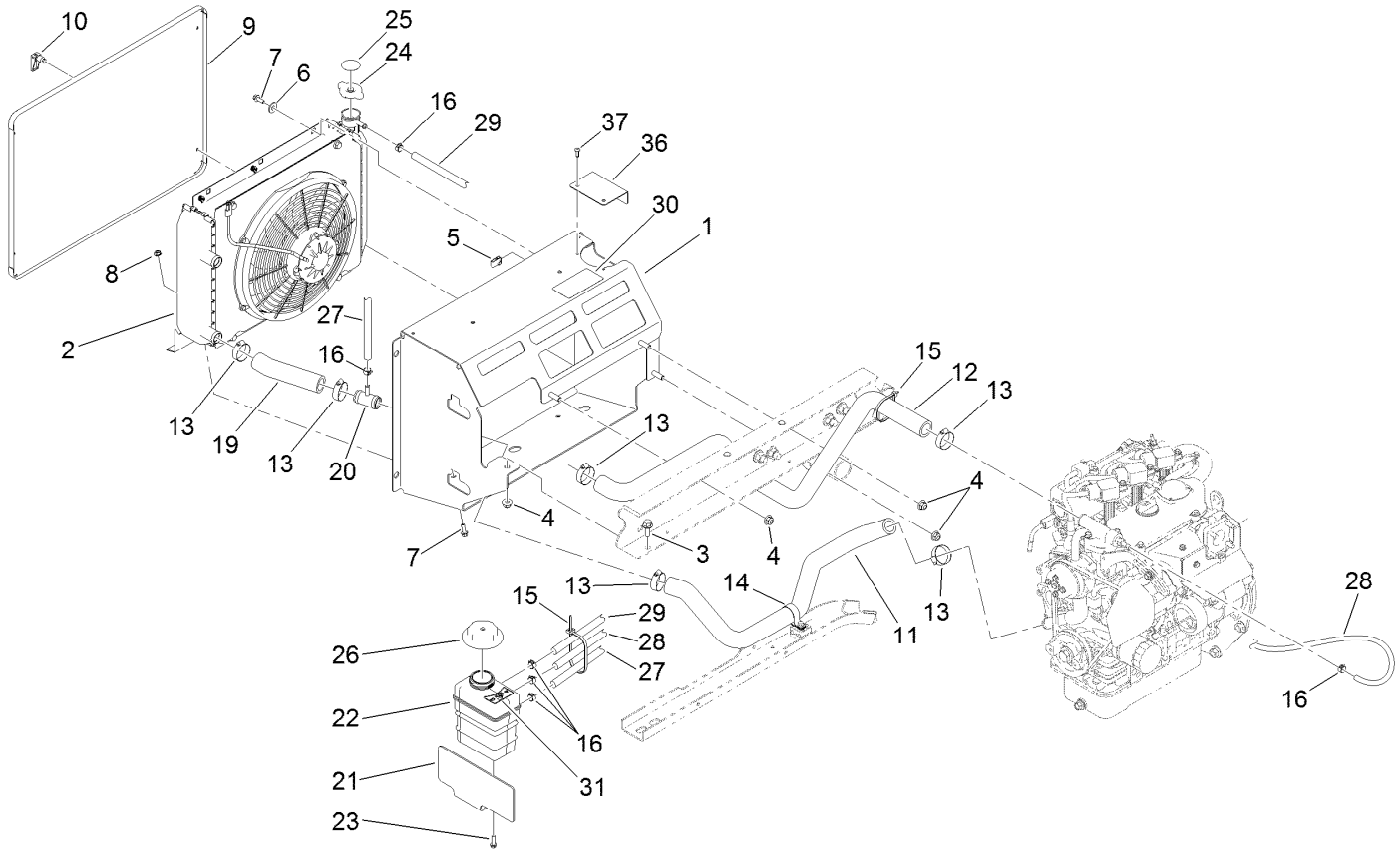


# Cooling System Assembly

| Ref. | Part Number | Qty. | Description |
|---|---|---|---|
| 1 | 115-2434 | 1 | Mount-Radiator |
| 2 | | 1 | Radiator ASM ● |
| 3 | 3234-11 | 1 | Screw-HHF |
| 4 | 104-8301 | 4 | Nut-HF, NI |
| 5 | 107069 | 2 | Clip |
| 6 | 3256-3 | 2 | Washer-Flat |
| 7 | 3234-4 | 4 | Screw-HHF |
| 8 | 32128-33 | 2 | Nut-HF |
| 9 | 115-2428-03 | 1 | Screen-Radiator |
| 10 | 74-5950 | 4 | Latch-Swell |
| 11 | 119-9487 | 1 | Hose-Coolant, Lower |
| 12 | 119-9486 | 1 | Hose-Coolant, Upper |
| 13 | 2412-34 | 6 | Clamp-Hose |
| 14 | 2412-74 | 1 | R-Clamp |
| 15 | 3290-379 | 4 | Tie-Cable |
| 16 | 92-2379 | 6 | Clamp-Hose |

| Ref. | Part Number | Qty. | Description |
|---|---|---|---|
| 19 | 120-4905 | 1 | Hose-Coolant, Lower |
| 20 | 120-4851 | 1 | Tee |
| 21 | 120-4906-03 | 1 | Plate-Mount, Tank |
| 22 | 120-4856 | 1 | Tank-Surge |
| 23 | 46-8091 | 2 | Screw-HWH |
| 24 | 120-4866 | 1 | Cap-System, Cooling |
| 25 | 106-6755 | 1 | Decal-Cap, Radiator |
| 26 | 120-4867 | 1 | Cap-Coolant, Threaded (15 PSI) |
| 27 | 120-5019 | 1 | Hose-Coolant |
| 28 | 120-5020 | 1 | Hose-Coolant |
| 29 | 120-5021 | 1 | Hose-Coolant |
| 30 | 121-6286 | 1 | Decal-Fill, Radiator |
| 31 | 121-6287 | 1 | Decal-Tank, Overflow |
| 36 | 136-6288 | 1 | Cover-Cap, Radiator |
| 37 | 63-8590 | 2 | Screw |

● Not serviced separately

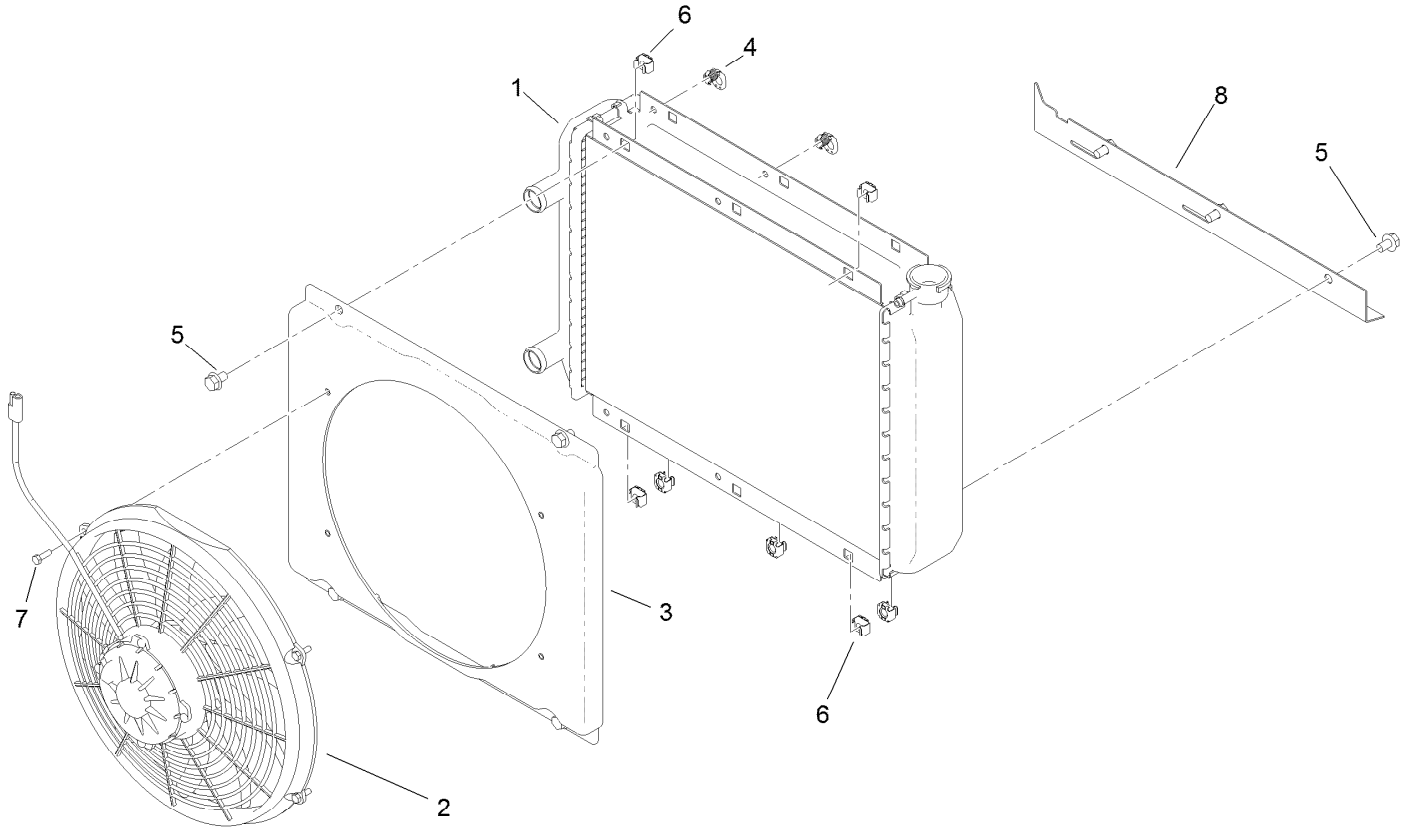


# Radiator Assembly

| Ref. | Part Number | Qty. | Description |
|---|---|---|---|
| 1 | 114-8384 | 1 | Radiator |
| 2 | 114-8385 | 1 | Fan-Electric |
| 3 | 114-8386 | 1 | Shroud |
| 4 | 114-8387 | 2 | Latch-Spring |
| 5 | 3234-30 | 7 | Screw-HHF |
| 6 | 703856 | 7 | Nut-Sq, Caged |
| 7 | 60-6910 | 4 | Screw-HH |
| 8 | 115-7765 | 1 | Plate-Mount, Lower |

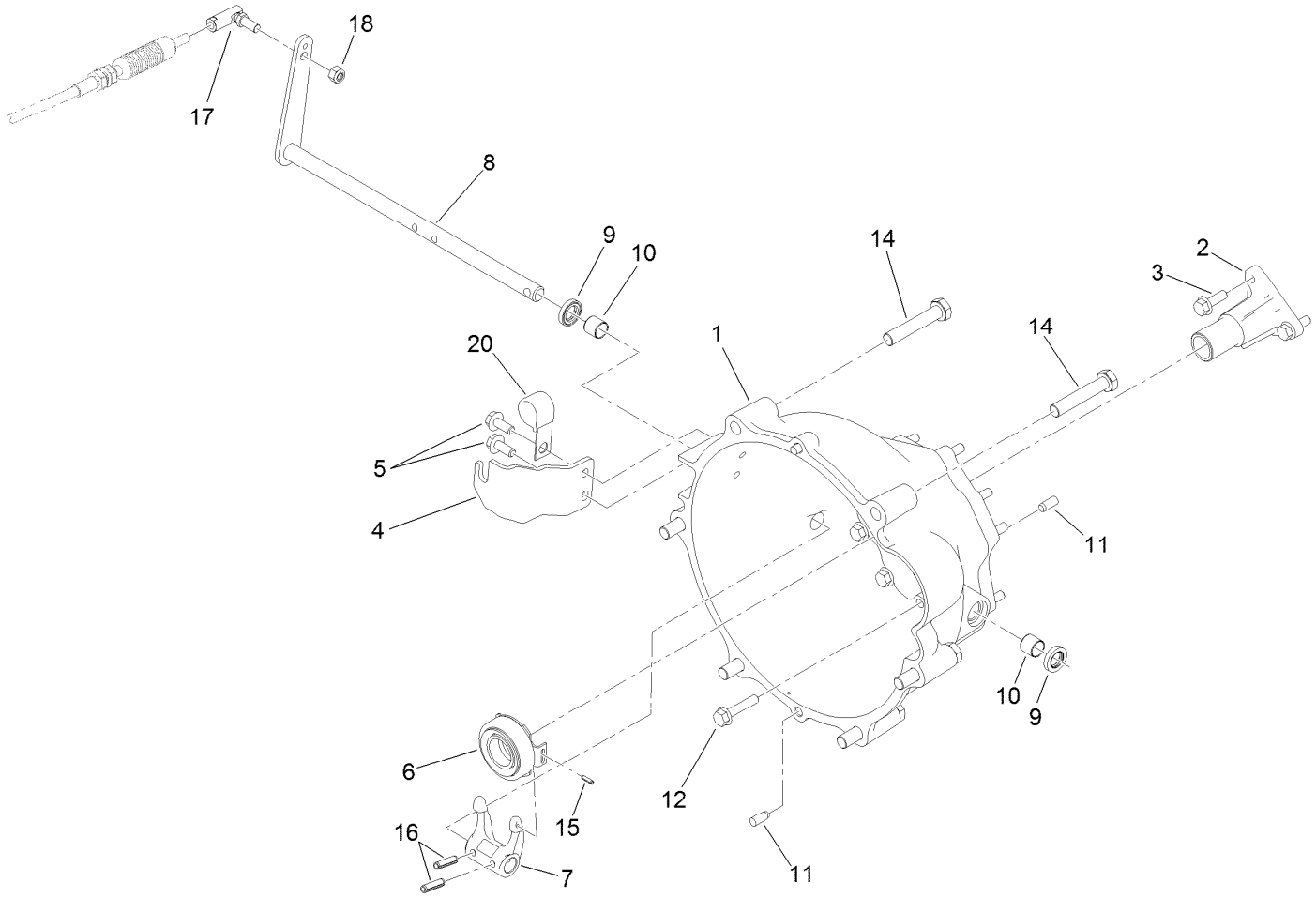


# Clutch Linkage Assembly

| Ref. | Part Number | Qty. | Description |
|---|---|---|---|
| 1 | 119-9498 | 1 | Bell Housing |
| 2 | 120-4886 | 1 | Guide-Release |
| 3 | 33104-025 | 3 | Screw-HHF |
| 4 | 115-2313 | 1 | Bracket-Cable, Clutch |
| 5 | 98-7977 | 2 | Screw-HHF |
| 6 | 110-2538 | 1 | Bearing-Release, Clutch |
| 7 | 87-5300 | 1 | Fork-Clutch |
| 8 | 115-2311 | 1 | Lever-Clutch |
| 9 | 87-1920 | 2 | Seal-Oil |

| Ref. | Part Number | Qty. | Description |
|---|---|---|---|
| 10 | 87-3770 | 2 | Bushing-Housing, Bell |
| 11 | 87-1910 | 4 | Pin-Dowel |
| 12 | 33104-040 | 9 | Screw-HHF |
| 14 | 107-7983 | 6 | Screw-HH |
| 15 | 32121-7 | 1 | Pin-Roll, Slotted |
| 16 | 32121-24 | 2 | Pin-Spring |
| 17 | 2411-33 | 1 | Balljoint-RH (W/Grommet) |
| 18 | 3296-4 | 1 | Nut-Lock |
| 20 | 120-5018 | 1 | Clip-Open J, Coated |

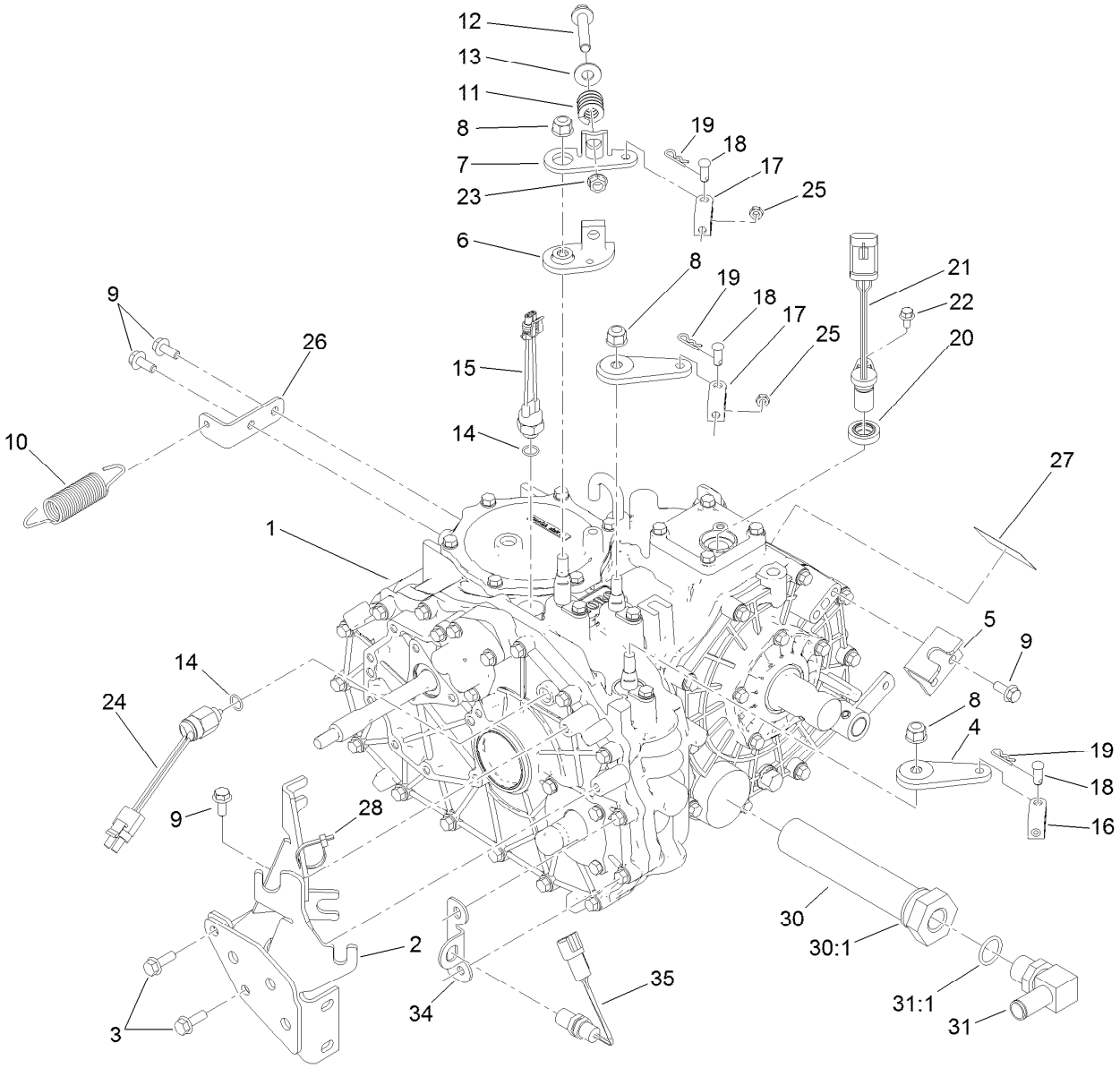


# Transaxle Assembly

| Ref. | Part Number | Qty. | Description |
|---|---|---|---|
| 1 | 115-2175 | 1 | 4 Wheel Drive Transaxle ASM |
| 2 | 105-4207-03 | 1 | Mount-Cable |
| 3 | 33104-025 | 2 | Screw-HHF |
| 4 | 132-6764 | 2 | Lever-Shift |
| 5 | 87-4470 | 1 | Bracket-Lock, Differential |
| 6 | 87-7970 | 1 | Arm-Shift |
| 7 | 87-8250 | 1 | Plate-Arm, Shift |
| 8 | 103-9511 | 3 | Nut-Lock, NI |
| 9 | 98-7977 | 5 | Screw-HHF |
| 10 | 68-9950 | 1 | Spring-Traction |
| 11 | 87-6910 | 1 | Spring-Compression |
| 12 | 66-9302 | 1 | Screw-HHF Lock |
| 13 | 3256-4 | 1 | Washer-Flat |
| 14 | 237-30 | 2 | O-Ring |
| 15 | 72-4310 | 1 | Switch-Ball |
| 16 | 87-7160 | 1 | Clevis-Cable |
| 17 | 87-2310 | 2 | Clevis-Cable |
| 18 | 283-62 | 3 | Pin-Clevis |
| 19 | 3290-307 | 3 | Pin-Cotter |
| 20 | 92-3735 | 1 | Seal-Sensor, Oil |
| 21 | 120-4800 | 1 | Sensor-Geartooth |
| 22 | 33103-012 | 1 | Screw-HHF |
| 23 | 3290-357 | 1 | Nut-HSF |
| 24 | 87-6710 | 1 | Switch-Transmission |
| 25 | 3220-1 | 2 | Nut-Jam |
| 26 | 131-3488 | 1 | Bracket-Spring, Clutch |
| 27 | 115-7741 | 1 | Decal-Oil, Transmission |
| 28 | 3290-379 | 1 | Tie-Cable |
| 30 | 87-3990 | 1 | Strainer-Transaxle |
| 30:1 | 237-123 | 1 | O-Ring |
| 31 | 353-987 | 1 | Fitting-Elbow, 90 |
| 31:1 | 237-81 | 1 | O-Ring |
| 34 | 136-6277 | 1 | Bracket-Sensor, 4Wd |
| 35 | 136-6349 | 1 | Sensor |

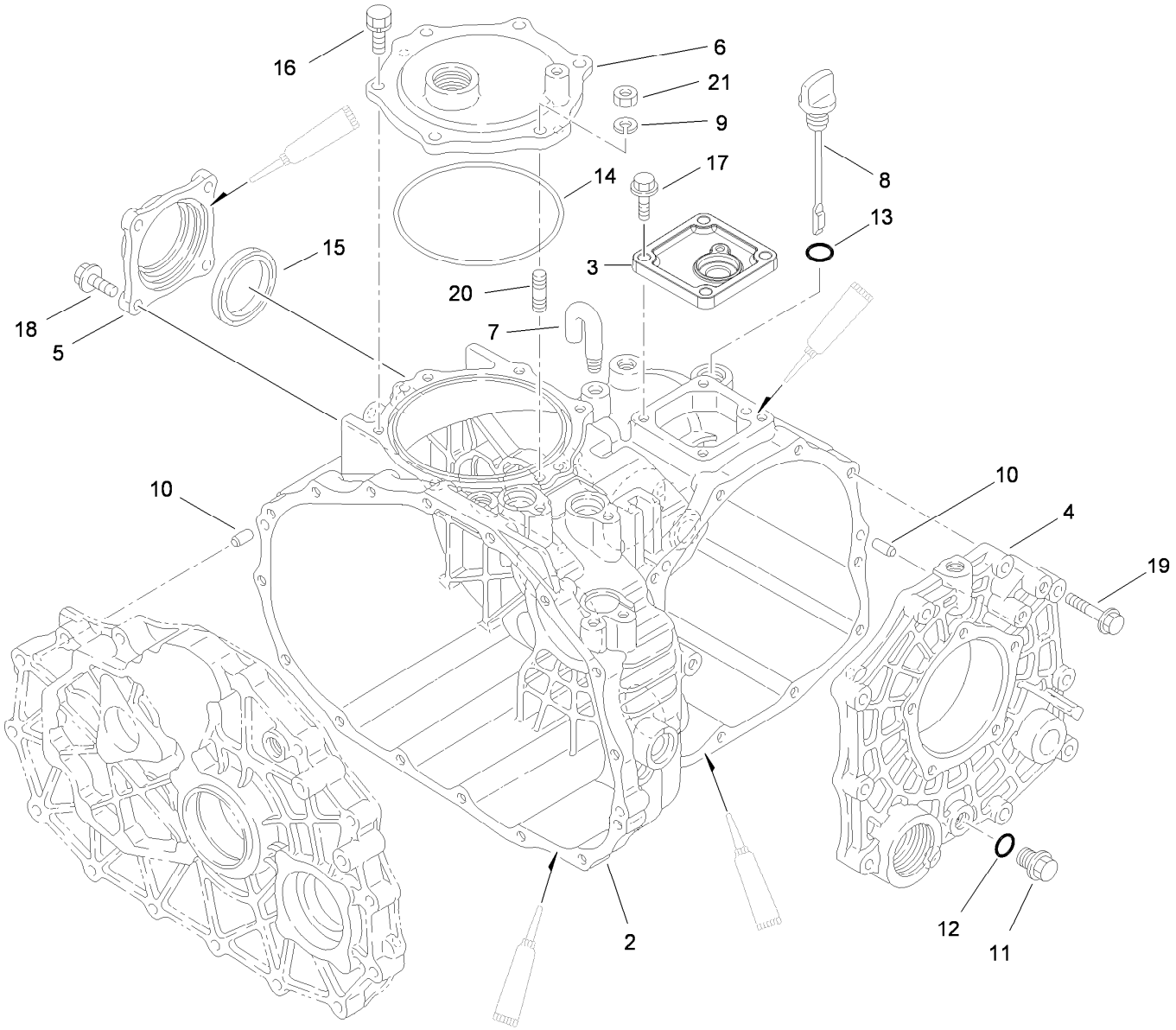


# Case Assembly
# 4 Wheel Drive Transaxle Assembly No. 115-2175

| Ref. | Part Number | Qty. | Description |
|---|---|---|---|
| 2 | 92-0651 | 1 | Case-Transmission |
| 3 | 92-0810 | 1 | Cover-Upper, Sensor |
| 4 | 92-0653 | 1 | Cover-Side |
| 5 | 92-0655 | 1 | Cover-Seal, Axle |
| 6 | 92-0656 | 1 | Cover-Upper, PTO |
| 7 | 92-0743 | 1 | Breather-Air |
| 8 | 92-0662 | 1 | Cap-Oil |
| 9 | 92-0762 | 1 | Washer-Spring |
| 10 | 92-0765 | 4 | Pin-Parallel |
| 11 | 92-0773 | 1 | Plug-Drain |

| Ref. | Part Number | Qty. | Description |
|---|---|---|---|
| 12 | 92-0787 | 1 | O-Ring |
| 13 | 92-0788 | 1 | O-Ring |
| 14 | 92-0790 | 1 | O-Ring |
| 15 | 92-0793 | 1 | Seal-Oil |
| 16 | 92-0796 | 5 | Bolt |
| 17 | 33104-025 | 4 | Screw-HHF |
| 18 | 33104-025 | 4 | Screw-HHF |
| 19 | 33104-040 | 10 | Screw-HHF |
| 20 | 92-0805 | 1 | Bolt 8X20 |
| 21 | 68-9400 | 1 | Nut-Flange |

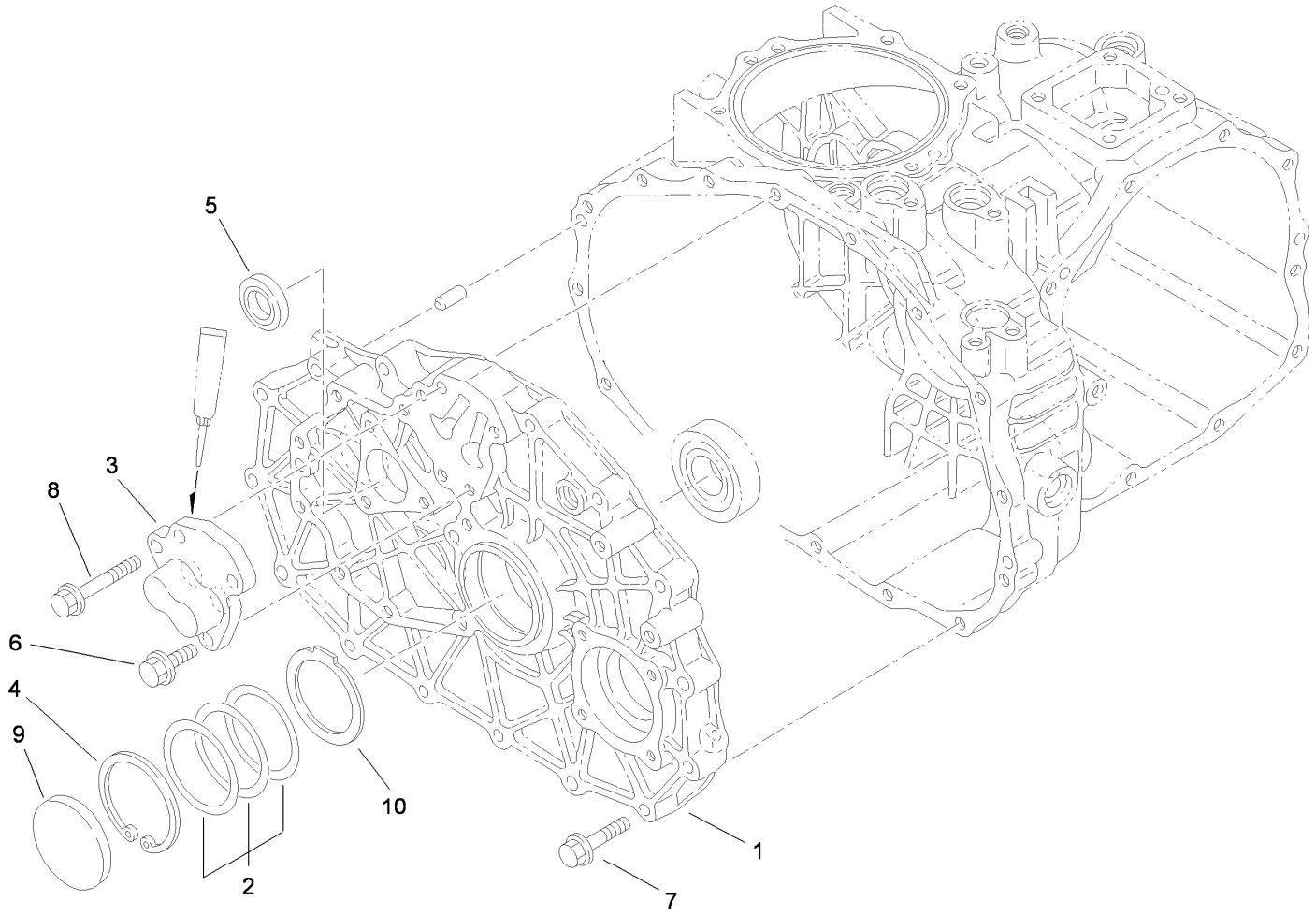


# Center Plate Assembly
# 4 Wheel Drive Transaxle Assembly No. 115-2175

| *Ref.* | *Part Number* | *Qty.* | *Description* |
|---|---|---|---|
| 1 | 100-4462 | 1 | Plate-Center, 4Wd |
| 2 | 100-4460 | 1 | Shim-Set |
| 3 | 92-0706 | 1 | Shaft-Fork |
| 4 | 92-0759 | 1 | Ring-Snap |
| 5 | 92-0791 | 1 | Seal-Oil |
| 6 | 33104-025 | 3 | Screw-HHF |
| 7 | 33104-040 | 15 | Screw-HHF |
| 8 | 33104-050 | 1 | Screw-HHF |
| 9 | 92-0807 | 1 | Cap-Sealing |
| 10 | 100-4465 | 1 | Shim (W/Tab) |

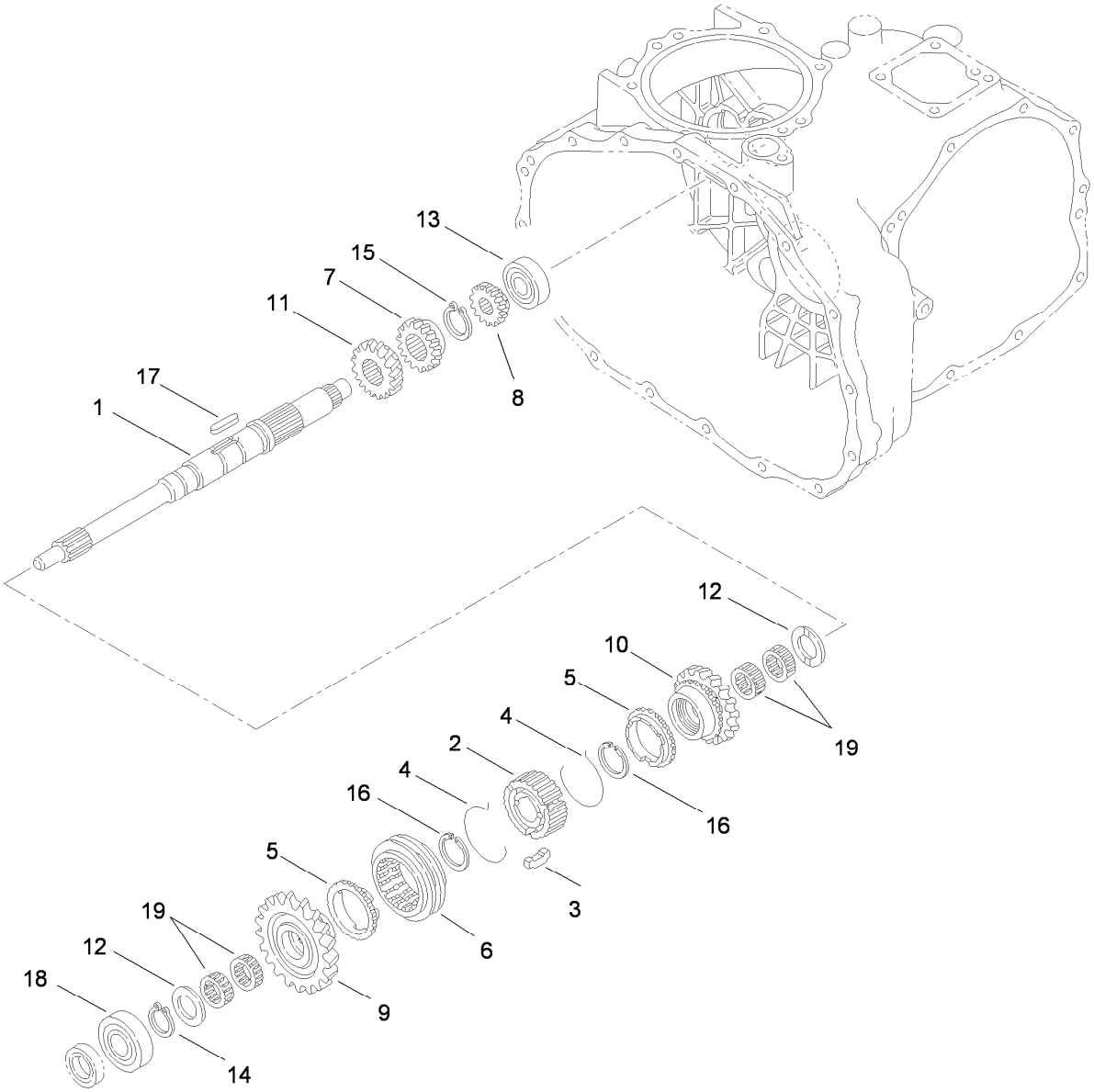


# Main Shaft Assembly
# 4 Wheel Drive Transaxle Assembly No. 115-2175

| Ref. | Part Number | Qty. | Description |
|---|---|---|---|
| 1 | 92-0663 | 1 | Shaft-Main |
| 2 | 92-0664 | 1 | Hub-Synchro |
| 3 | 92-0665 | 3 | Key-Synchro |
| 4 | 92-0666 | 2 | Spring-Synchro |
| 5 | 92-0667 | 2 | Ring-Synchro |
| 6 | 92-0668 | 1 | Shifter-Synchro |
| 7 | 92-0672 | 1 | Gear-Main, 18 Tooth |
| 8 | 92-0673 | 1 | Gear-Main, 14 Tooth |
| 9 | 110-2521 | 1 | Gear-Main, 27 Tooth |
| 10 | 110-2522 | 1 | Gear- Main, 24 Tooth |

| Ref. | Part Number | Qty. | Description |
|---|---|---|---|
| 11 | 92-0687 | 1 | Gear-Main, 16 Tooth |
| 12 | 92-0740 | 2 | Washer-Thrust |
| 13 | 92-0650 | 1 | Bearing |
| 14 | 92-0753 | 1 | Ring-Snap |
| 15 | 92-0754 | 1 | Ring-Snap |
| 16 | 92-0763 | 2 | Ring-Snap |
| 17 | 92-0772 | 1 | Key |
| 18 | 251-8 | 1 | Bearing-Ball |
| 19 | 92-0781 | 4 | Bearing-Needle |

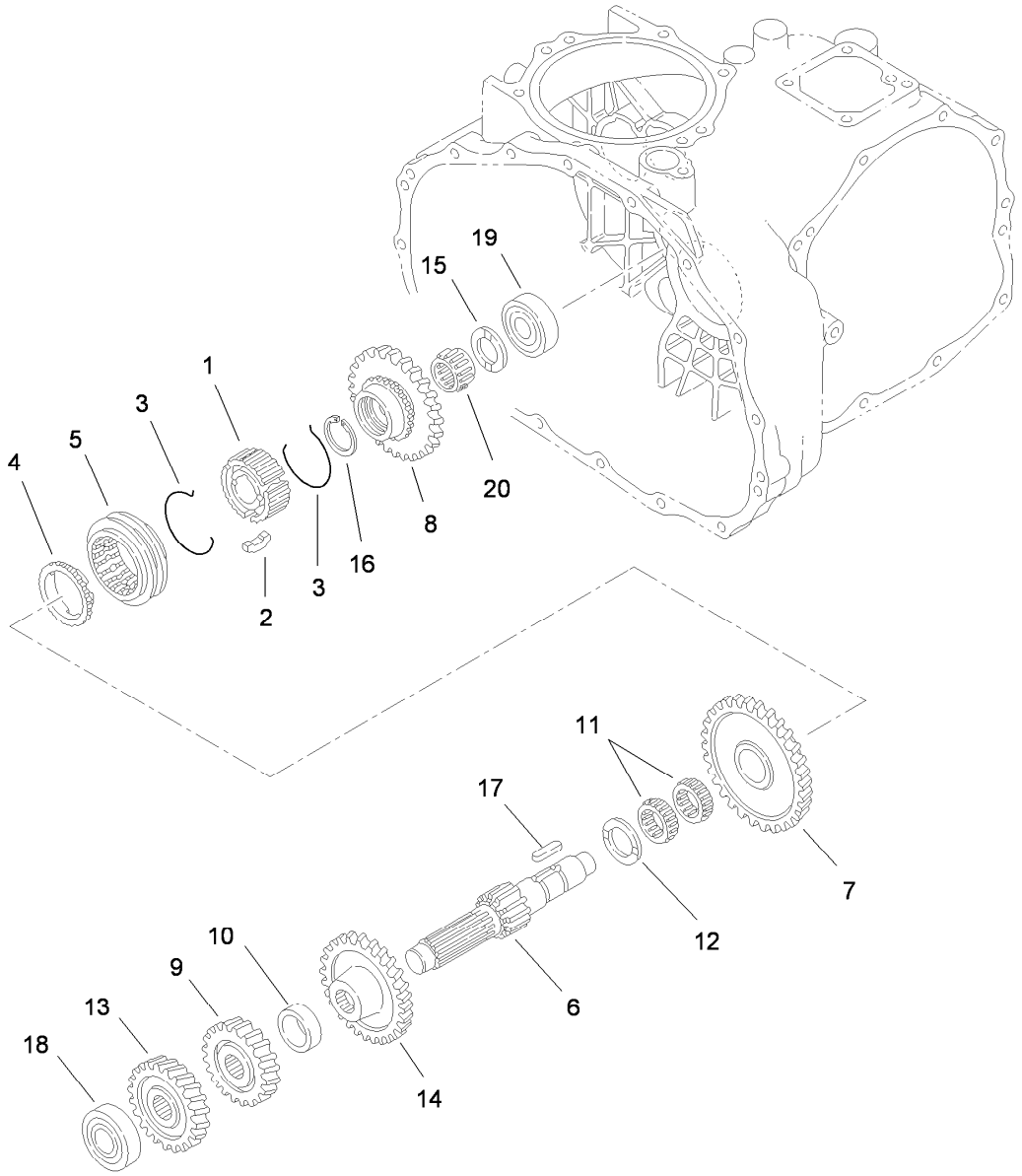


# Reduction Shaft Assembly
# 4 Wheel Drive Transaxle Assembly No. 115-2175

| Ref. | Part Number | Qty. | Description |
|---|---|---|---|
| 1 | 92-0664 | 1 | Hub-Synchro |
| 2 | 92-0665 | 3 | Key-Synchro |
| 3 | 92-0666 | 2 | Spring-Synchro |
| 4 | 92-0667 | 1 | Ring-Synchro |
| 5 | 92-0668 | 1 | Shifter-Synchro |
| 6 | 92-0674 | 1 | Shaft-Reduction |
| 7 | 110-2524 | 1 | Gear- Reduction, 49 Tooth |
| 8 | 92-0819 | 1 | Gear-Reduction, 40 Tooth |
| 9 | 92-0769 | 1 | Pin-Roll |
| 10 | 92-0680 | 1 | Collar |

| Ref. | Part Number | Qty. | Description |
|---|---|---|---|
| 11 | 92-0681 | 2 | Bearing-Needle |
| 12 | 92-0682 | 1 | Washer-Thrust |
| 13 | 92-0822 | 1 | Gear-Reduction, 28 Tooth |
| 14 | 92-0823 | 1 | Gear-Reduction, 43 Tooth |
| 15 | 92-0740 | 1 | Washer-Thrust |
| 16 | 92-0673 | 1 | Gear-Main, 14 Tooth |
| 17 | 92-0772 | 1 | Key |
| 18 | 105-7985 | 1 | Bearing |
| 19 | 92-0778 | 1 | Bearing |
| 20 | 92-0782 | 1 | Bearing-Needle |

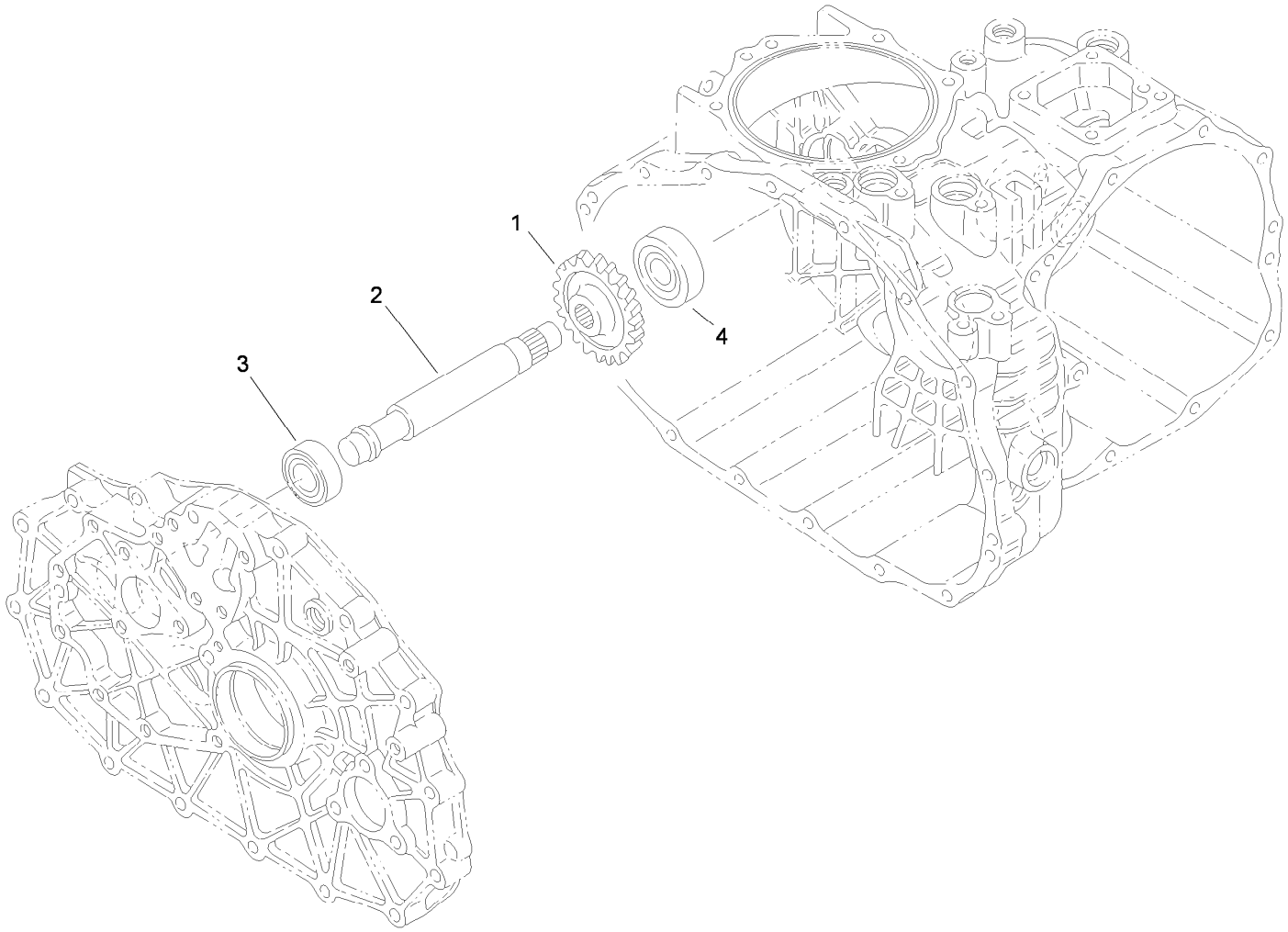


# Reverse Shaft Assembly
# 4 Wheel Drive Transaxle Assembly No. 115-2175

| *Ref.* | *Part Number* | *Qty.* | *Description* |
|---|---|---|---|
| 1 | 92-0684 | 1 | Gear-Reverse, 33 Tooth |
| 2 | 92-0824 | 1 | Shaft-Idler, Reverse |
| 3 | 251-346 | 1 | Bearing-Ball |
| 4 | 92-0778 | 1 | Bearing |

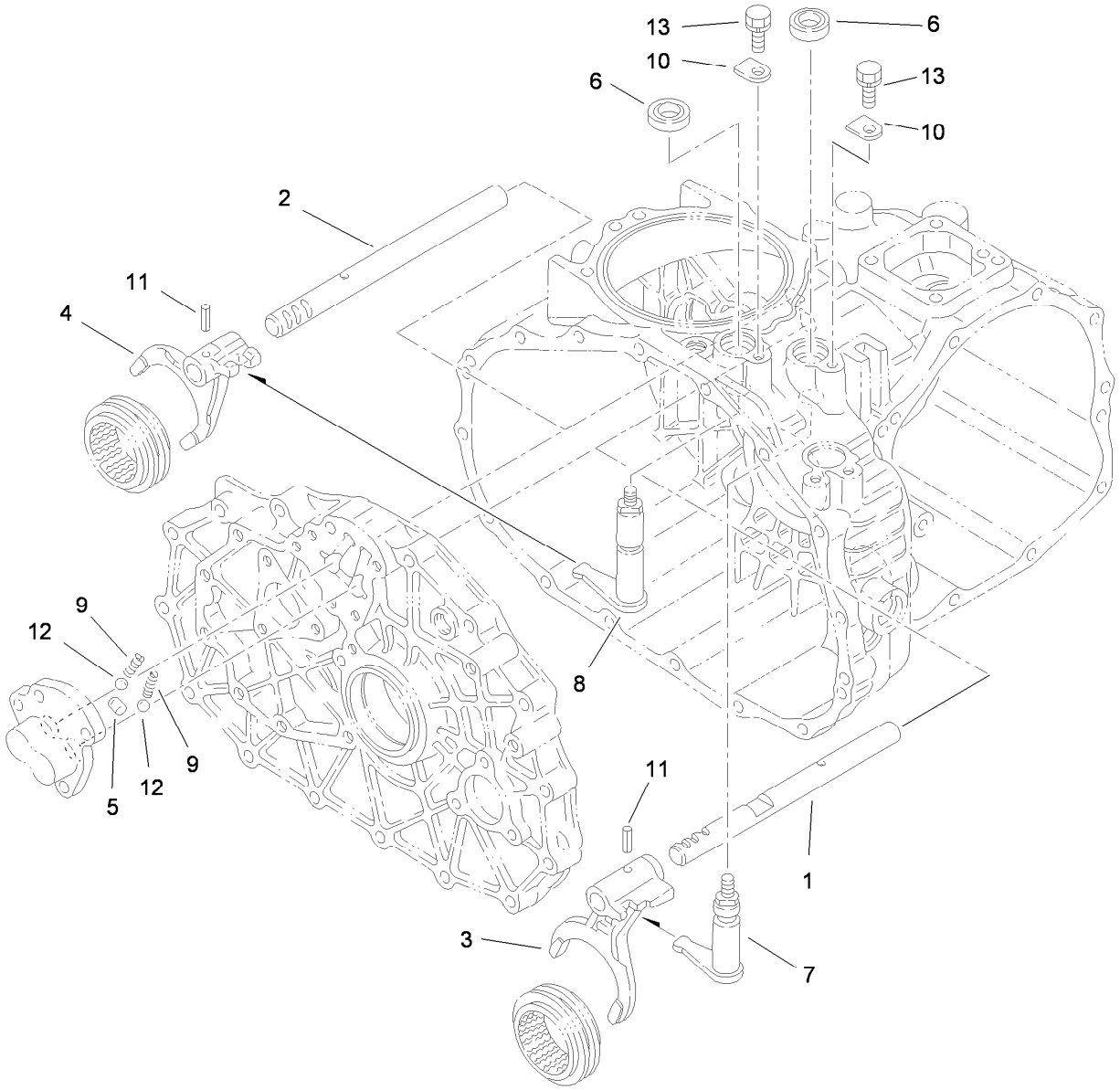


# Main Shift Assembly
# 4 Wheel Drive Transaxle Assembly No. 115-2175

| *Ref.* | *Part Number* | *Qty.* | *Description* |
|---|---|---|---|
| 1 | 92-0698 | 1 | Shaft-Fork |
| 2 | 92-0699 | 1 | Shaft-Fork |
| 3 | 92-0700 | 1 | Fork-Shift |
| 4 | 92-0701 | 1 | Fork-Shift |
| 5 | 92-0705 | 1 | Lock-Spindle |
| 6 | 92-0729 | 2 | Seal-Oil |
| 7 | 92-0816 | 1 | Arm-Shift |
| 8 | 92-0817 | 1 | Arm-Shift |
| 9 | 92-0731 | 2 | Spring |
| 10 | 92-0732 | 2 | Plate-Keeper |
| 11 | 92-0769 | 2 | Pin-Roll |
| 12 | 92-0785 | 2 | Ball-Steel |
| 13 | 33104-016 | 2 | Screw-HHF |

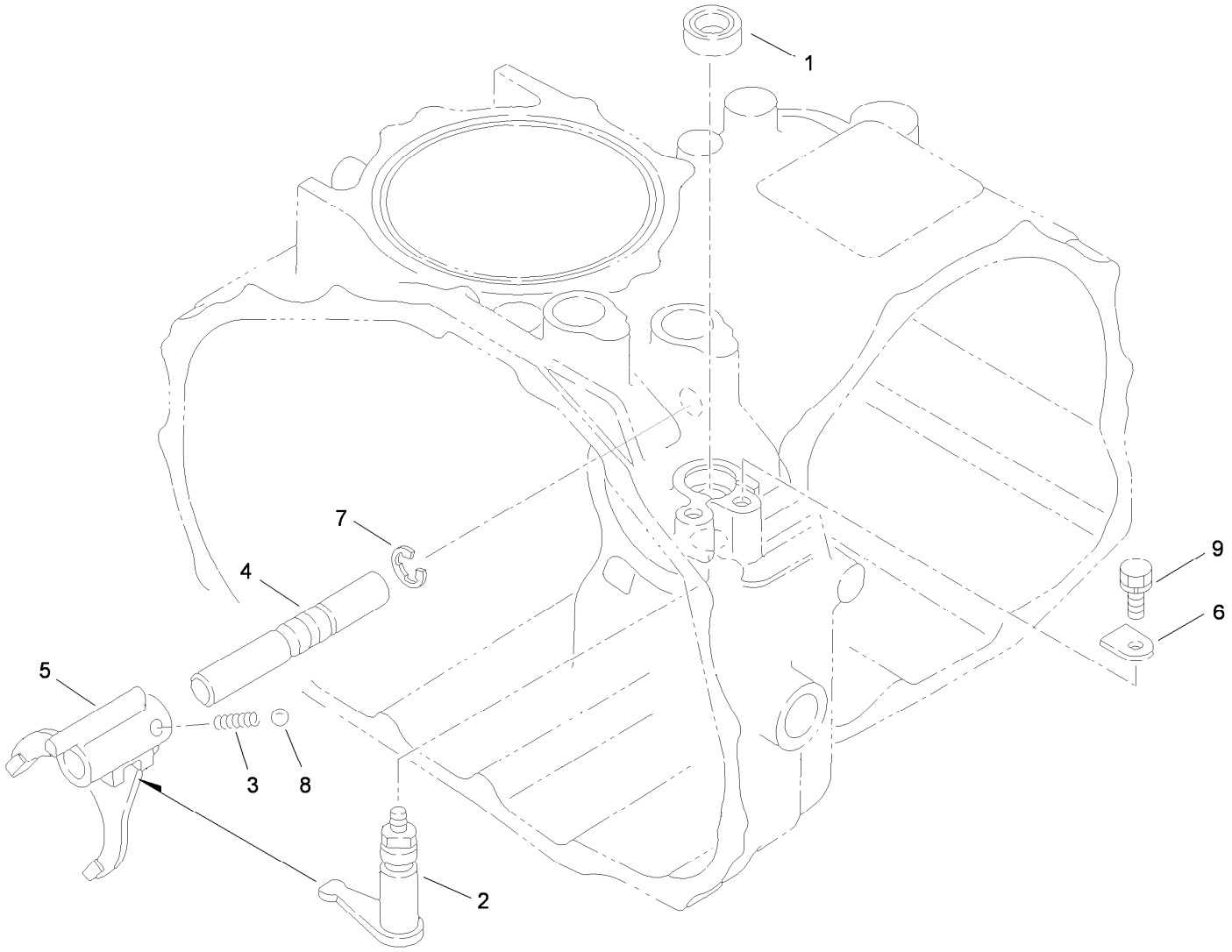


# Hi-Lo Shift Assembly
# 4 Wheel Drive Transaxle Assembly No. 115-2175

| *Ref.* | *Part Number* | *Qty.* | *Description* |
|---|---|---|---|
| 1 | 92-0729 | 1 | Seal-Oil |
| 2 | 92-0818 | 1 | Arm-Shift |
| 3 | 92-0731 | 1 | Spring |
| 4 | 92-0708 | 1 | Shaft-Fork |
| 5 | 92-0709 | 1 | Fork-Shift |
| 6 | 92-0732 | 1 | Plate-Keeper |
| 7 | 92-0761 | 1 | Ring-E |
| 8 | 92-0785 | 1 | Ball-Steel |
| 9 | 33104-016 | 1 | Screw-HHF |

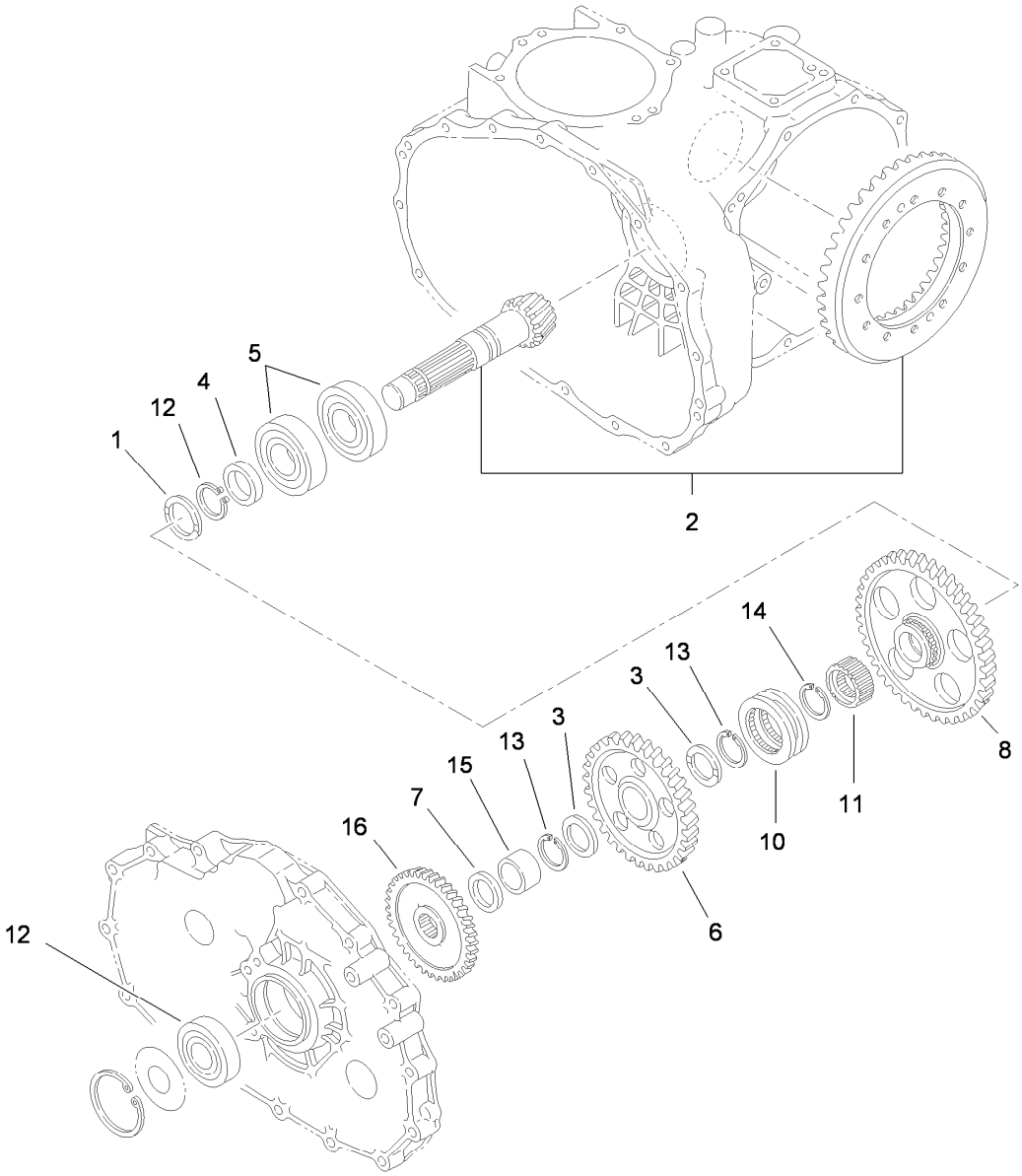


# Countershaft Assembly
# 4 Wheel Drive Transaxle Assembly No. 115-2175

| *Ref.* | *Part Number* | *Qty.* | *Description* |
|---|---|---|---|
| 1 | 92-0741 | 1 | Washer-Thrust |
| 2 | 105-7983 | 1 | Countershaft And Ring Gear ASM |
| 3 | 92-0711 | 2 | Washer-Thrust |
| 4 | 92-0713 | 1 | Collar |
| 5 | 92-0714 | 2 | Bearing |
| 6 | 92-0715 | 1 | Gear-Countershaft |
| 7 | 92-0716 | 1 | Collar |
| 8 | 92-0717 | 1 | Gear-Countershaft |
| 10 | 92-0718 | 1 | Shifter |
| 11 | 105-7986 | 1 | Collar-Spline |
| 12 | 92-0712 | 1 | Bearing-Ball |
| 13 | 105-7987 | 2 | Ring-Snap |
| 14 | 92-0755 | 1 | Ring-Snap |
| 15 | 92-0783 | 1 | Race-Inner |
| 16 | 92-5186 | 1 | Pinion |

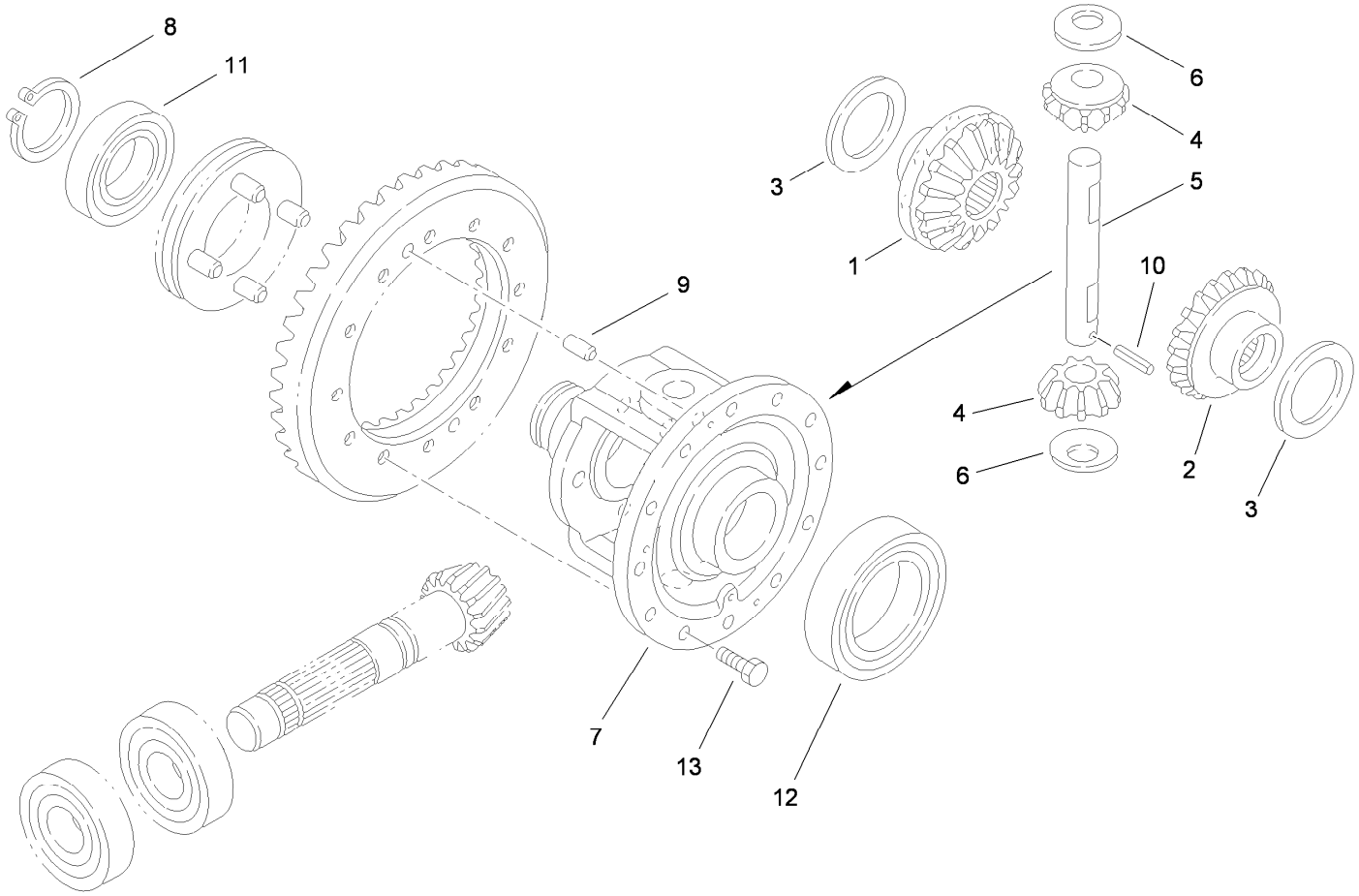


# Differential Gear Assembly
# 4 Wheel Drive Transaxle Assembly No. 115-2175

| *Ref.* | *Part Number* | *Qty.* | *Description* |
|---|---|---|---|
| 1 | 92-0745 | 1 | Gear-Side, LH |
| 2 | 92-0746 | 1 | Gear-Side, RH |
| 3 | 92-0747 | 2 | Side-Gear, Left Inner |
| 4 | 92-0748 | 2 | Pinion-Differential |
| 5 | 92-0749 | 1 | Shaft-Pinion |
| 6 | 92-0750 | 2 | Washer |
| 7 | 92-0720 | 1 | Case-Differential |
| 8 | 92-0756 | 1 | Ring-Snap |
| 9 | 92-0765 | 2 | Pin-Parallel |
| 10 | 92-0768 | 1 | Pin-Roll, Spring |
| 11 | 92-0775 | 1 | Bearing |
| 12 | 92-0776 | 1 | Bearing |
| 13 | 92-0803 | 12 | Bolt |

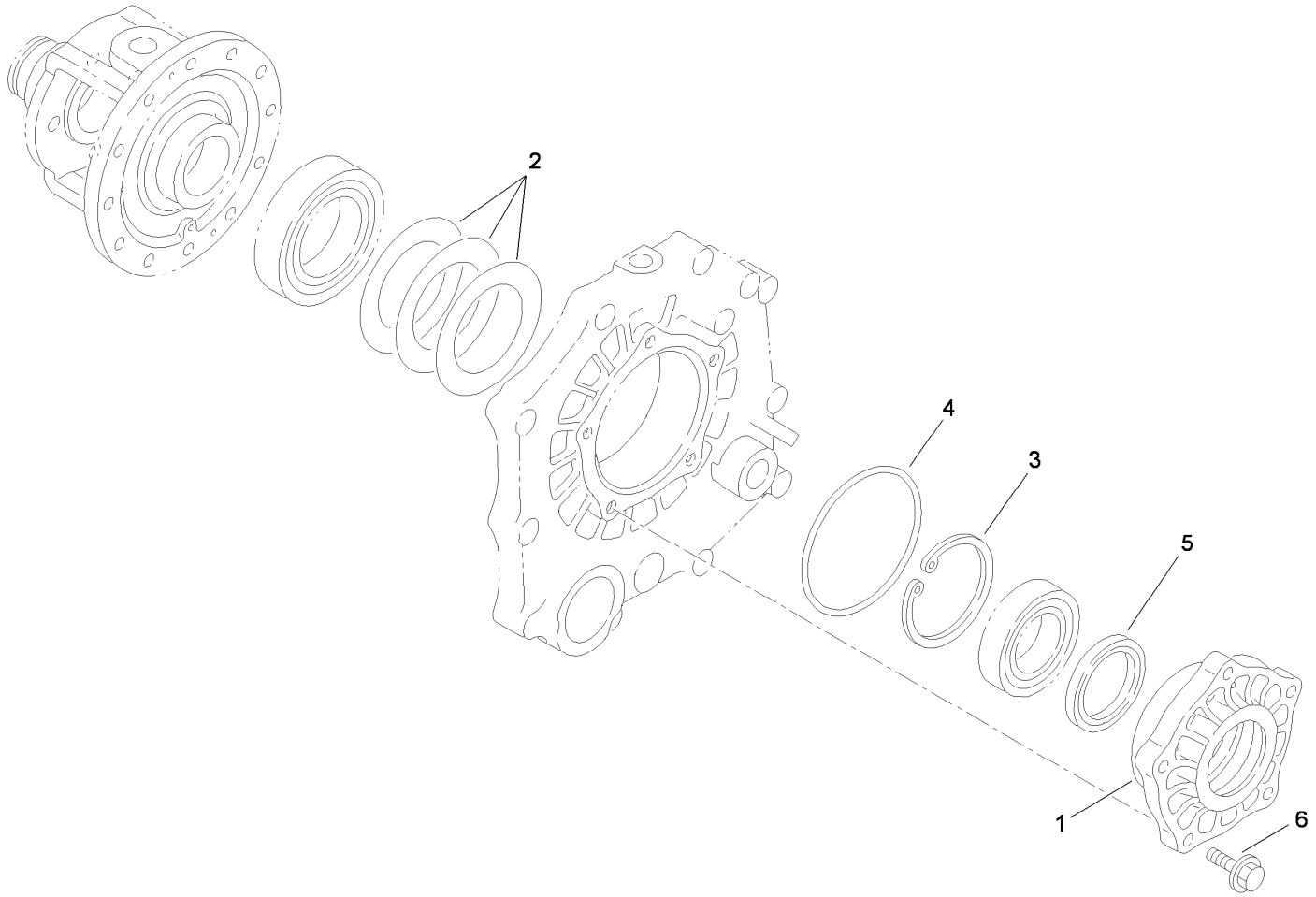


# Differential Carrier Assembly
# 4 Wheel Drive Transaxle Assembly No. 115-2175

| *Ref.* | *Part Number* | *Qty.* | *Description* |
|---|---|---|---|
| 1 | 92-0654 | 1 | Carrier-Differential |
| 2 | 92-0809 | 1 | Set-Shim |
| 3 | 92-0760 | 1 | Ring-Snap |
| 4 | 92-0789 | 1 | O-Ring |
| 5 | 92-0793 | 1 | Seal-Oil |
| 6 | 33104-030 | 5 | Screw-HHF |

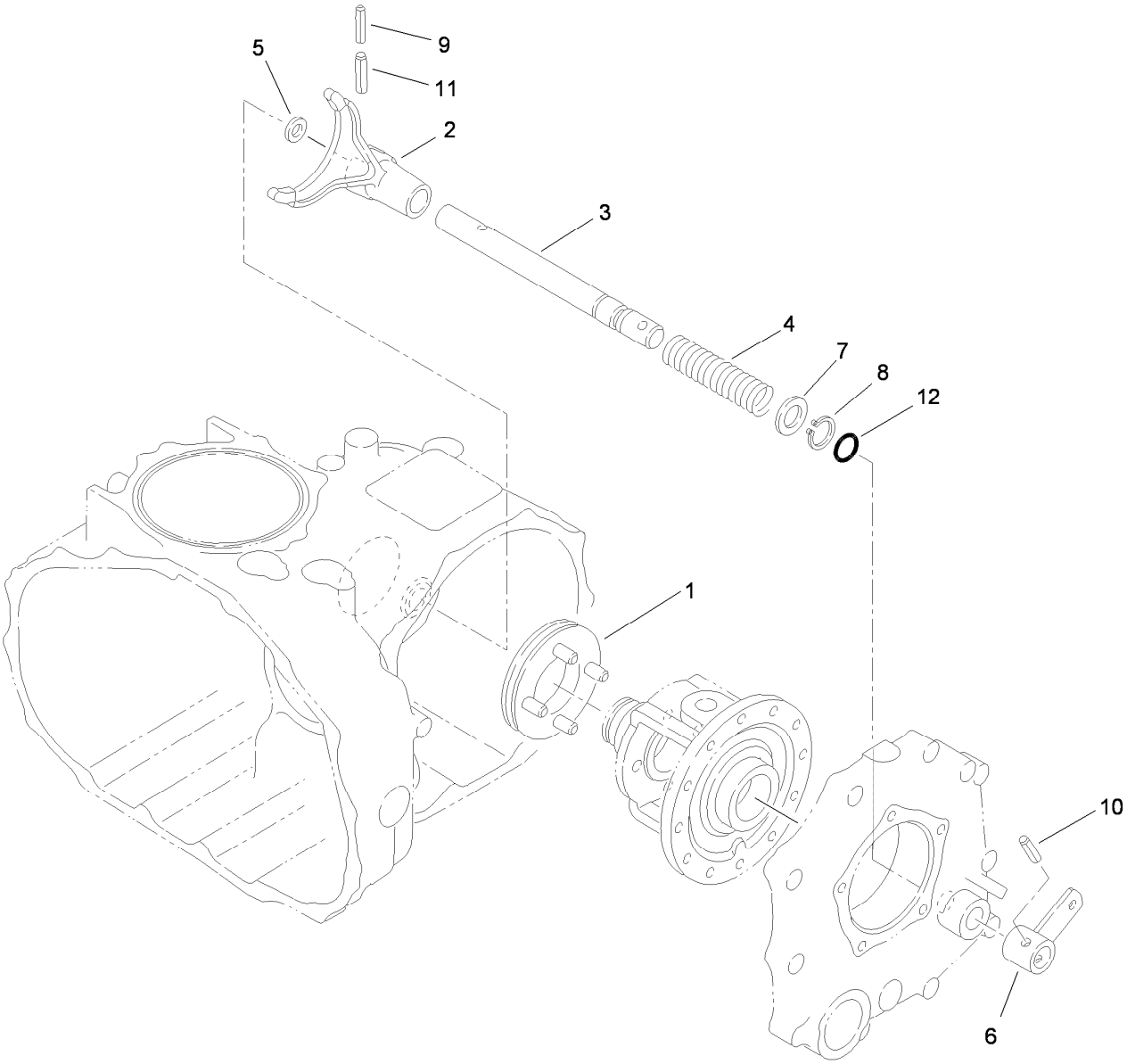


# Differential Lock Assembly
# 4 Wheel Drive Transaxle Assembly No. 115-2175

| *Ref.* | *Part Number* | *Qty.* | *Description* |
|---|---|---|---|
| 1 | 92-0730 | 1 | Slider-Differential, Lock |
| 2 | 92-0721 | 1 | Fork-Lock, Differential |
| 3 | 92-0722 | 1 | Shaft-Fork, Lock Differential |
| 4 | 92-0723 | 1 | Spring-Lock, Differential |
| 5 | 92-0744 | 1 | Washer |
| 6 | 92-0724 | 1 | Arm-Lock, Differential |
| 7 | 92-0733 | 1 | Washer |
| 8 | 92-0753 | 1 | Ring-Snap |
| 9 | 92-0768 | 1 | Pin-Roll, Spring |
| 10 | 92-0770 | 1 | Pin-Roll, Spring |
| 11 | 92-0771 | 1 | Pin-Roll, Spring |
| 12 | 92-0787 | 1 | O-Ring |

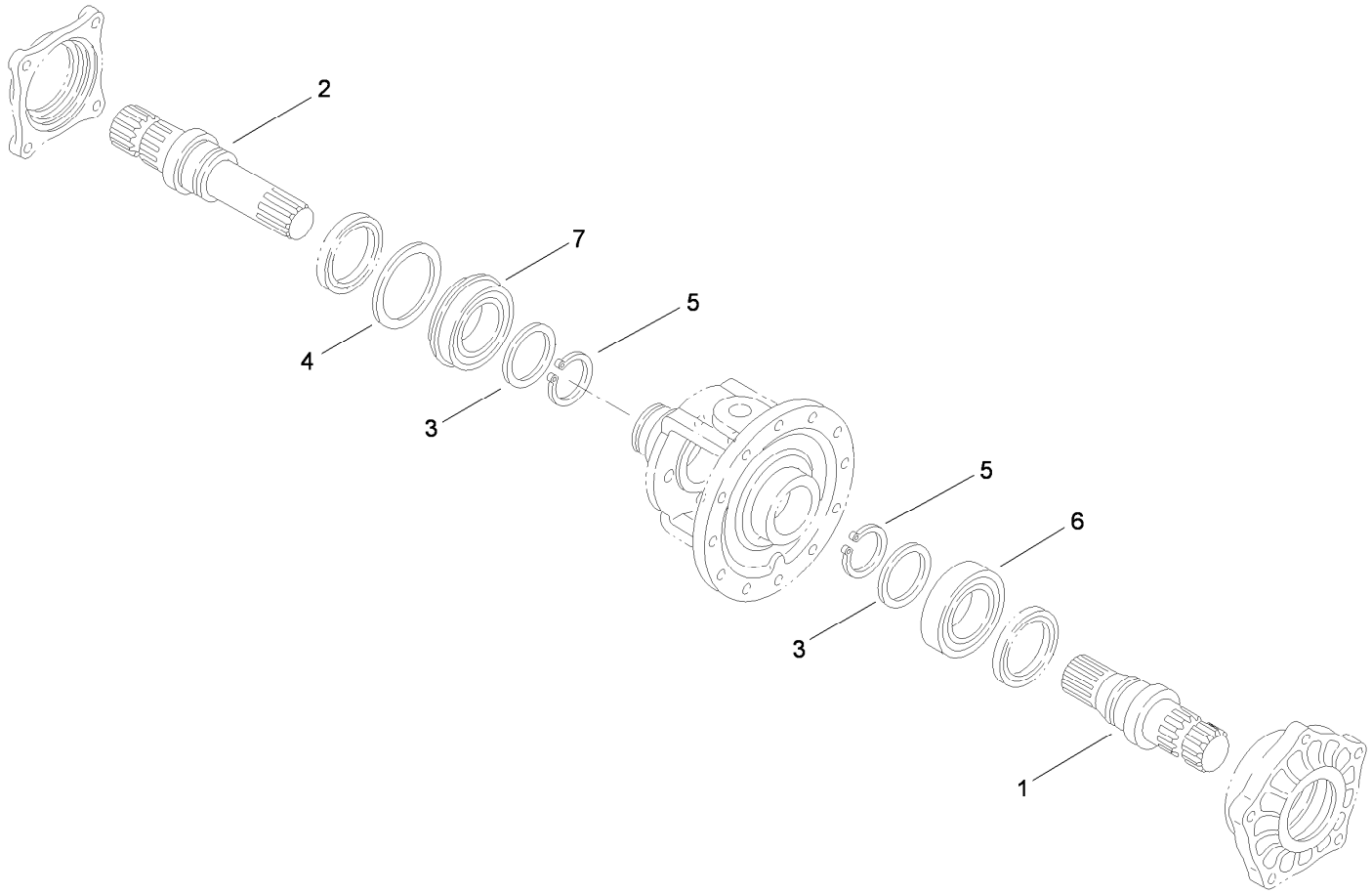


# Axle Shaft Assembly
# 4 Wheel Drive Transaxle Assembly No. 115-2175

| *Ref.* | *Part Number* | *Qty.* | *Description* |
|---|---|---|---|
| 1 | 92-0725 | 1 | Shaft-Axle, Left |
| 2 | 92-0726 | 1 | Shaft-Axle, Right |
| 3 | 92-0727 | 2 | Washer |
| 4 | 92-0728 | 1 | Washer |
| 5 | 92-0756 | 2 | Ring-Snap |
| 6 | 92-0775 | 1 | Bearing |
| 7 | 92-0780 | 1 | Bearing |

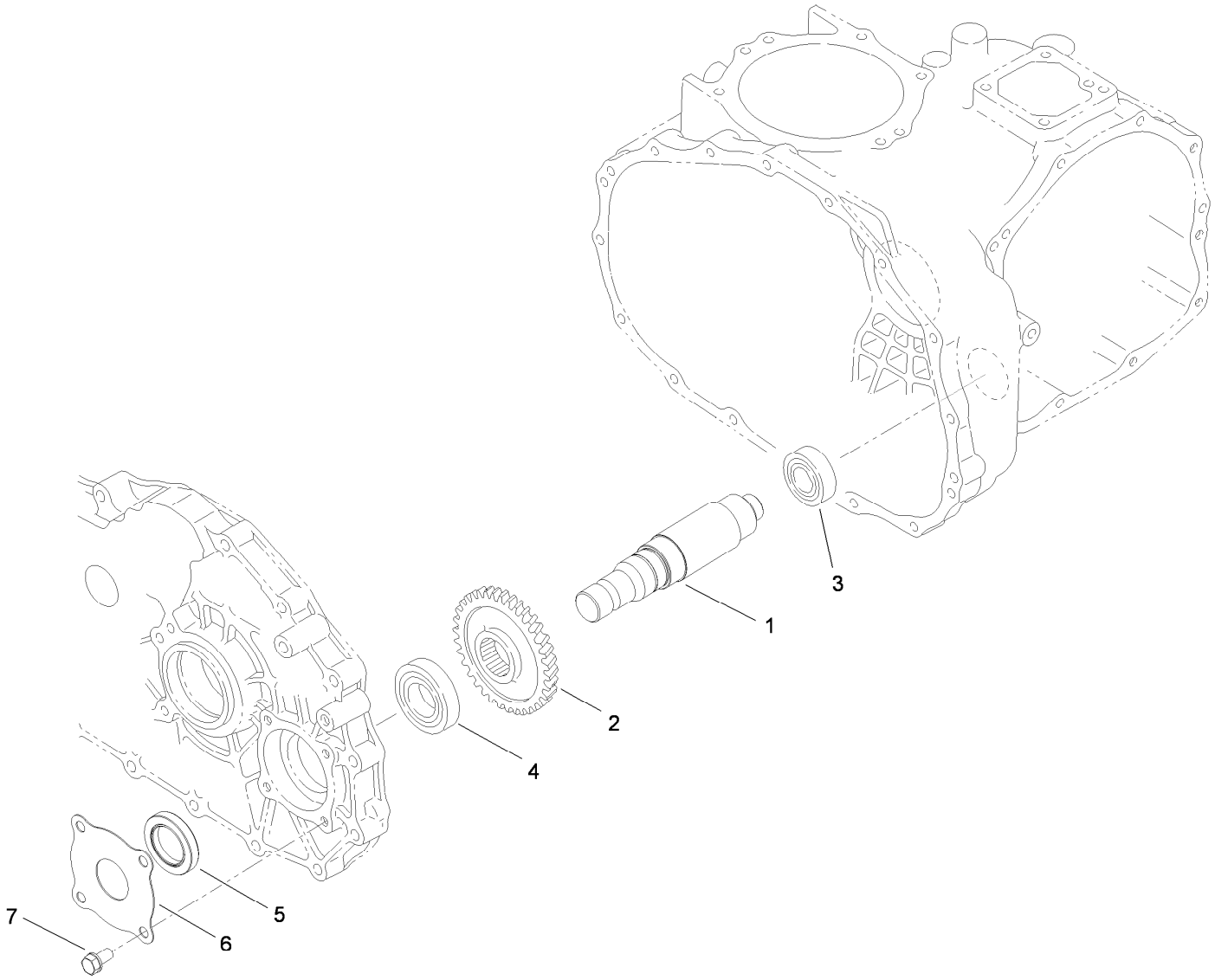


# Front Drive Assembly
# 4 Wheel Drive Transaxle Assembly No. 115-2175

| *Ref.* | *Part Number* | *Qty.* | *Description* |
|---|---|---|---|
| 1 | 115-7828 | 1 | Driveshaft-Front |
| 2 | 92-5184 | 1 | Gear |
| 3 | 251-346 | 1 | Bearing-Ball |
| 4 | 92-5185 | 1 | Bearing |
| 5 | 115-7829 | 1 | Seal |
| 6 | 115-7830 | 1 | Protector-Seal |
| 7 | 33104-016 | 4 | Screw-HHF |

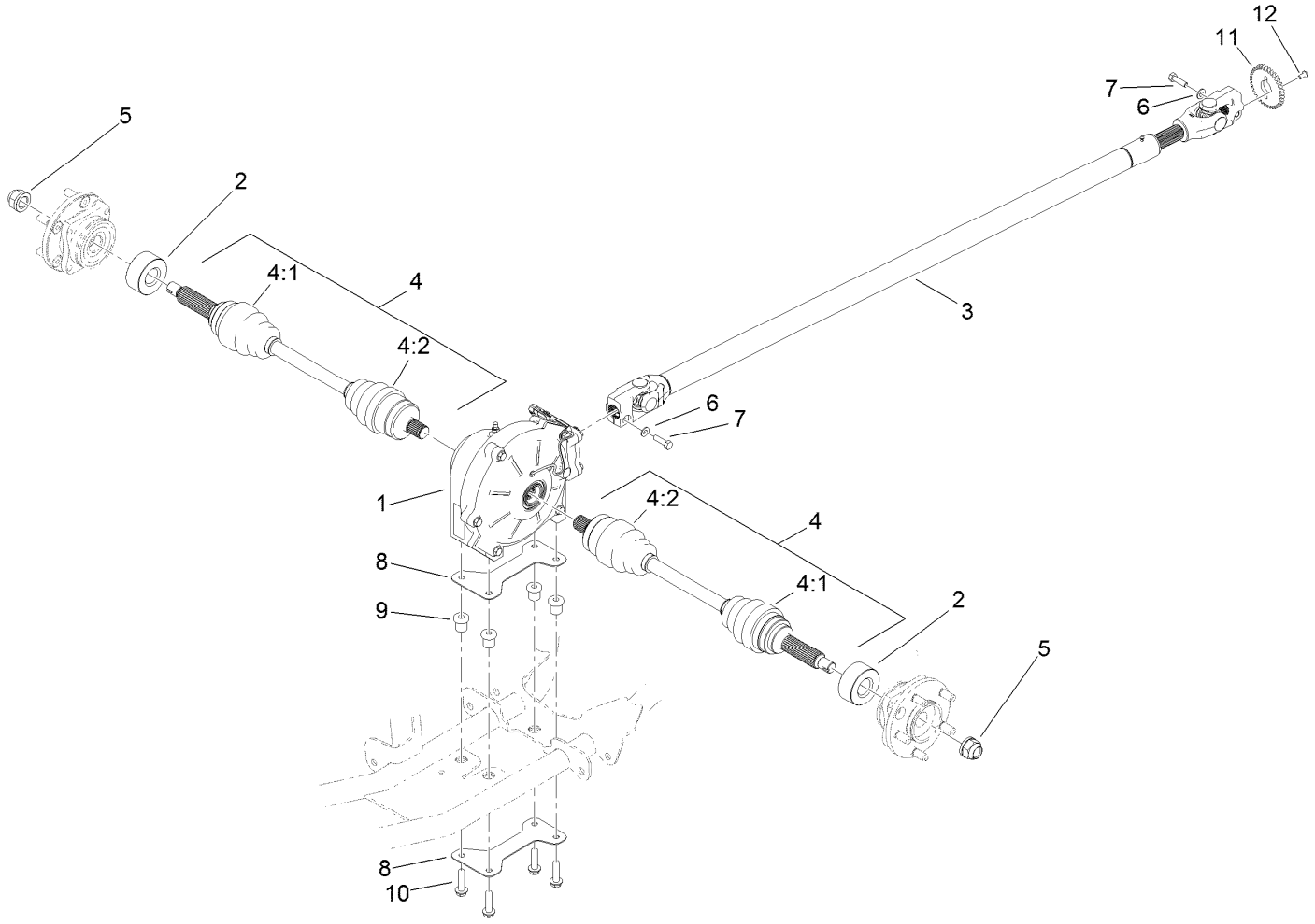


# 4 Wheel Drive Assembly

| Ref. | Part Number | Qty. | Description |
|---|---|---|---|
| 1 | 119-0824 | 1 | Differential ASM |
| 2 | 115-2254 | 2 | Spacer-Axle |
| 3 | 136-6327 | 1 | Drive Shaft ASM |
| 4 | 115-2172 | 2 | Cv Axle ASM |
| 4:1 | 107-2891 | 1 | Outboard Boot Kit |
| 4:2 | 107-2892 | 1 | Inboard Boot Kit |
| 5 | 115-2164 | 2 | Nut-Spindle |
| 6 | 3256-23 | 2 | Washer-Plain |
| 7 | 3210-6 | 2 | Screw-HH |
| 8 | 119-9477-03 | 2 | Plate-Differential |
| 9 | 63-9750 | 4 | Mount |
| 10 | 3234-18 | 4 | Screw-HHF |
| 11 | 136-6331 | 1 | Ring-Sensor, 4Wd |
| 12 | 137-2794 | 1 | Screw-HSBH |

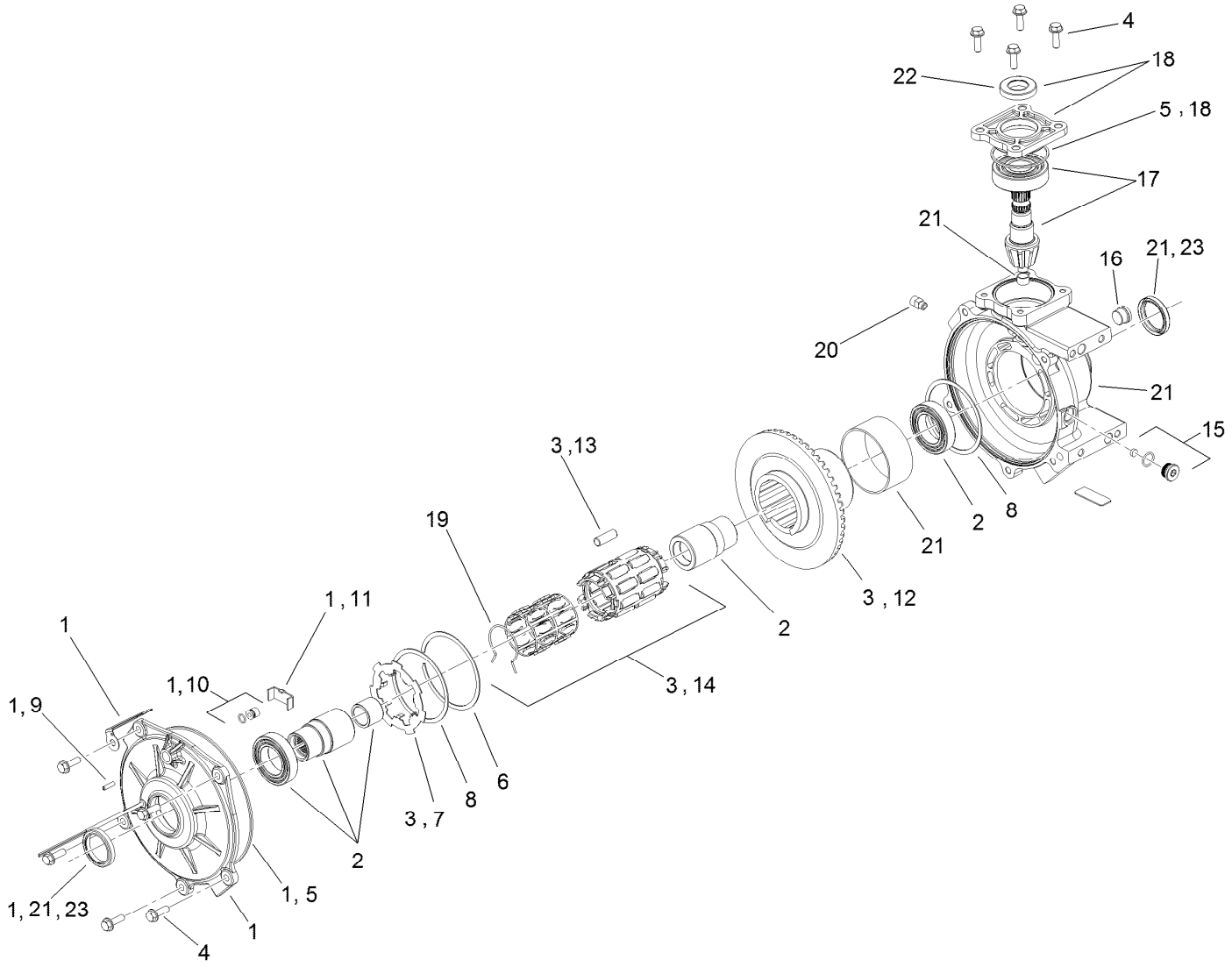


# Differential Assembly No. 119-0824

| Ref. | Part Number | Qty. | Description |
|---|---|---|---|
| 1 | 115-7790 | 1 | Output Cover ASM |
| 2 | 119-9479 | 1 | Output Hub ASM |
| 3 | 115-7792 | 1 | Clutch ASM |
| 4 | 115-7793 | 1 | Bolt Kit |
| 5 | 115-7794 | 1 | Seal Kit |
| 6 | 115-7795 | 1 | Ring-Retaining, Internal |
| 7 | 115-7796 | 1 | Plate-Armature, Notched |
| 8 | 115-7797 | 1 | Shim |
| 9 | 115-7798 | 1 | Screw-Set |
| 10 | 115-7799 | 1 | Thrust Button ASM |
| 11 | 115-7800 | 1 | Plate-Thrust |
| 12 | 115-7801 | 1 | Gear-Ring, 50T |

| Ref. | Part Number | Qty. | Description |
|---|---|---|---|
| 13 | 115-7802 | 1 | Roll Kit |
| 14 | 115-7803 | 1 | Roll Cage ASM |
| 15 | 115-7804 | 1 | Drain Plug ASM |
| 16 | 115-7805 | 1 | Plug-Oil, Fill |
| 17 | 115-7806 | 1 | Shaft-Pinion, 9T |
| 18 | 115-7807 | 1 | Input Cover ASM |
| 19 | 115-7808 | 1 | Spring-Torsion |
| 20 | 117-4985 | 1 | Vent-Protected |
| 21 | 119-9480 | 1 | Gearcase ASM |
| 22 | 127-8866 | 1 | Input Seal |
| 23 | 127-8867 | 2 | Output Seal |

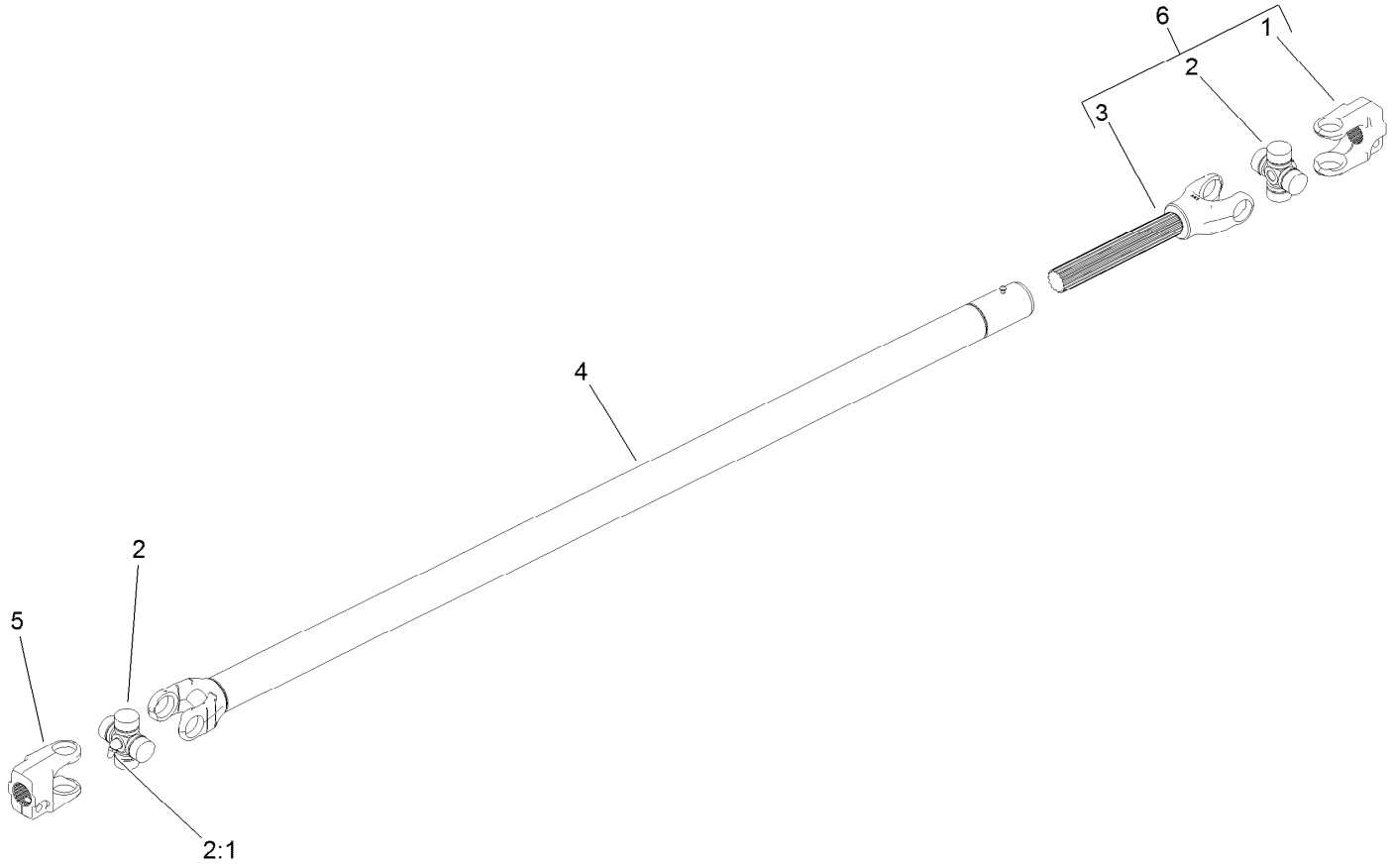


# Drive Shaft Assembly No. 136-6327

| *Ref.* | *Part Number* | *Qty.* | *Description* |
|---|---|---|---|
| 1 | 136-6326 | 1 | Yoke |
| 2 | 54-9180 | 2 | U-Joint Kit |
| 2:1 | 62-3820 | 1 | Fitting-Grease |
| 3 | 115-7708 | 1 | Yoke And Shaft |
| 4 | 115-7709 | 1 | Yoke, Tube And Slip Sleeve ASM |
| 5 | 115-7707 | 1 | Yoke |
| 6 | 136-6338 | 1 | Yoke And Shaft ASM |

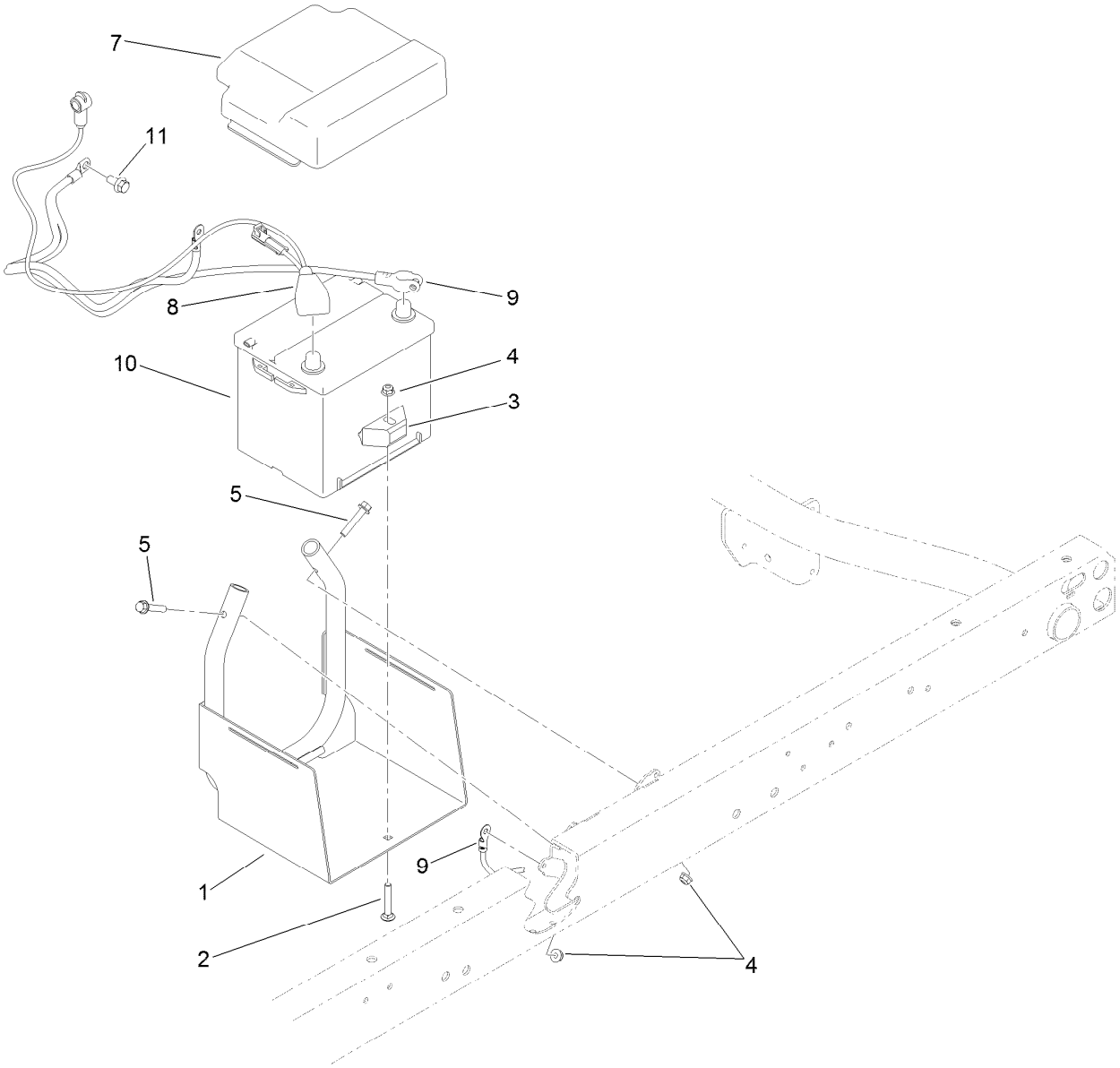


# Battery Assembly

| Ref. | Part Number | Qty. | Description |
|---|---|---|---|
| 1 | 115-2237-03 | 1 | Tray-Battery |
| 2 | 3230-6 | 1 | Bolt-CARR |
| 3 | 66-2490 | 1 | Retainer-Battery |
| 4 | 104-8300 | 3 | Nut-HF, NI |
| 5 | 94-5780 | 2 | Screw-HWH |
| 7 | 119-9496 | 1 | Cover-Battery |
| 8 | 122-0281 | 1 | Cable-Battery, Positive |
| 9 | 122-1024 | 1 | Cable-Battery, Negative |
| 10 | 106-5187 | 1 | Battery, 525 CCA W/O Electrolyte |
| 11 | 120-4839 | 1 | Screw-HHF |

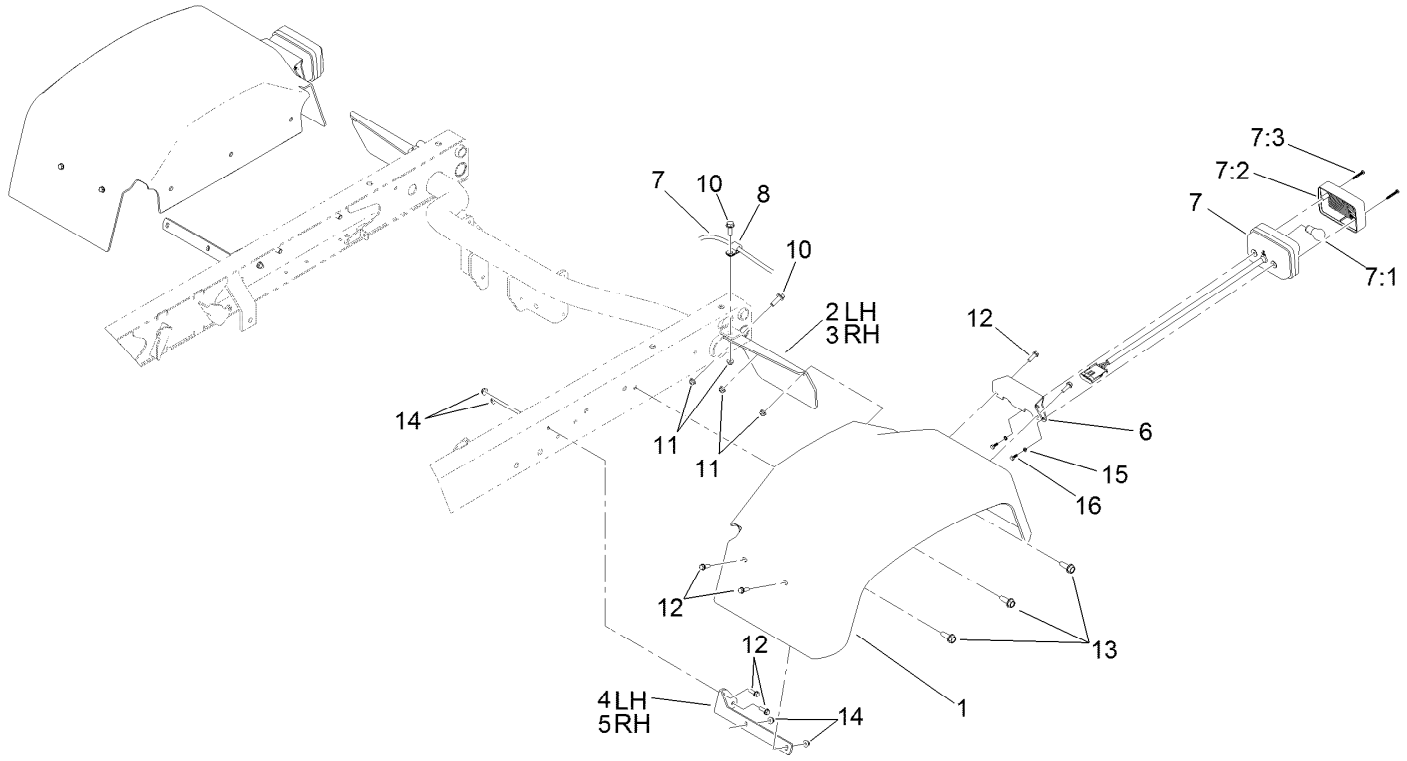


# Tail Light and Fender Assembly

| Ref. | Part Number | Qty. | Description |
|---|---|---|---|
| 1 | 132-6701 | 2 | Fender-Rear |
| 2 | 93-8943-03 | 1 | Bracket-Fender, Rear (LH) |
| 3 | 93-8944-03 | 1 | Bracket-Fender, Rear (RH) |
| 4 | 93-8941-03 | 1 | Bracket-Fender, Front (LH) |
| 5 | 93-8942-03 | 1 | Bracket-Fender, Front (RH) |
| 6 | 121-6269-03 | 2 | Bracket-Light, Tail |
| 7 | 120-4820 | 2 | Light-Tail, Brake |
| 7:1 | 115-7858 | 1 | Bulb-7528 |
| 7:2 | 121-6271 | 1 | Lens-Light, Tail |

| Ref. | Part Number | Qty. | Description |
|---|---|---|---|
| 7:3 | 121-6272 | 2 | Screw-PPH |
| 8 | 2412-93 | 2 | Clamp-R |
| 10 | 3234-17 | 4 | Screw-HHF |
| 11 | 104-8300 | 4 | Nut-HF, NI |
| 12 | 32105-15 | 12 | Screw-HWH |
| 13 | 105-6245 | 6 | Screw-Tapping |
| 14 | 104-7201 | 12 | Nut-HF, NI |
| 15 | 43-5920 | 4 | Washer-Lock, Spring |
| 16 | 121-6320 | 4 | Screw-HH |

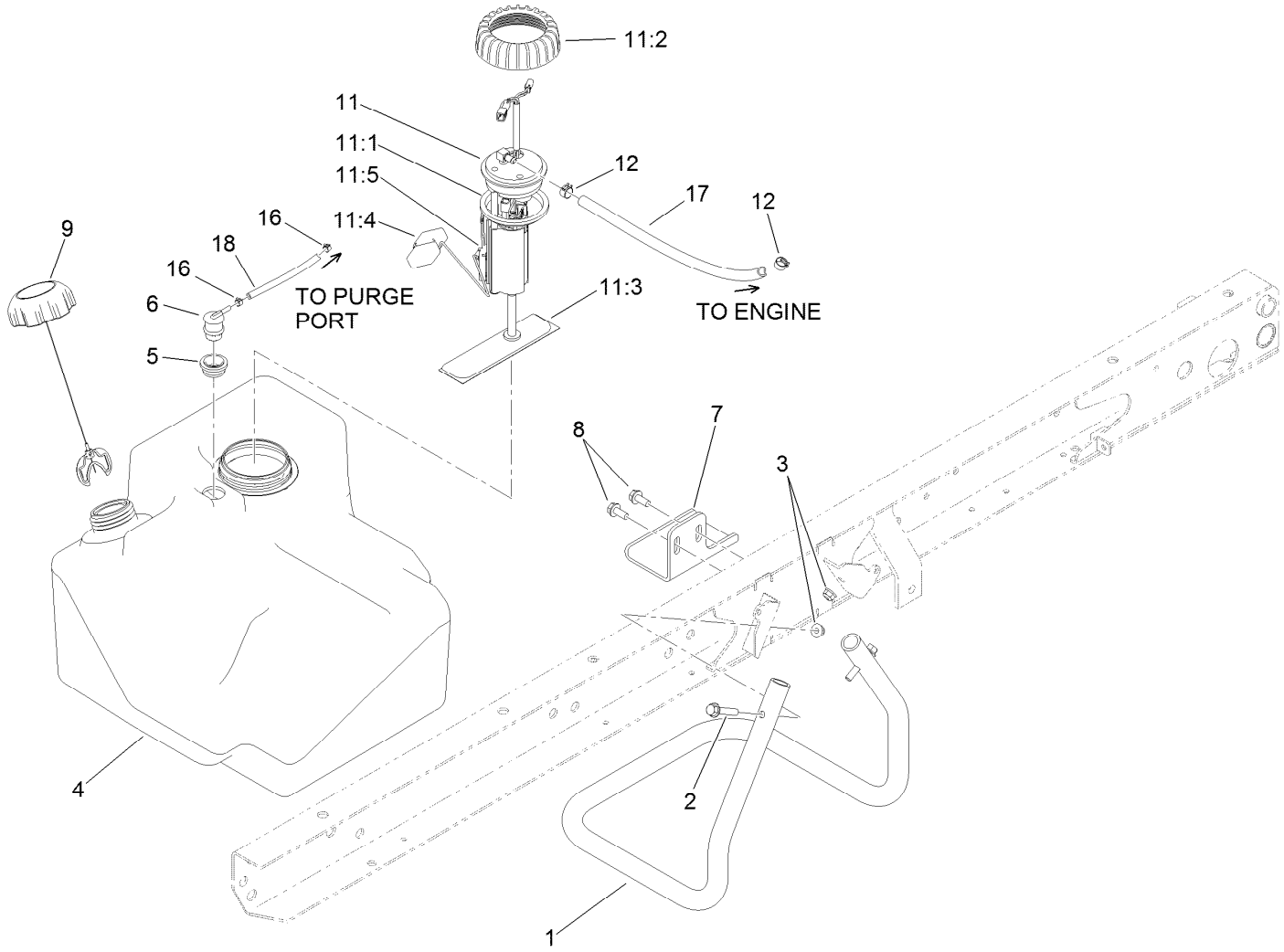


# Fuel System Assembly

| Ref. | Part Number | Qty. | Description |
|---|---|---|---|
| 1 | 115-7767-03 | 1 | Tube-Support |
| 2 | 94-5780 | 2 | Screw-HWH |
| 3 | 104-8300 | 2 | Nut-HF, NI |
| 4 | 115-7700 | 1 | Tank-Fuel |
| 5 | 114-0284 | 1 | Grommet |
| 6 | 114-0285 | 1 | Valve-Rollover |
| 7 | 114-8404 | 1 | Plate-Retainer |
| 8 | 32144-70 | 2 | Screw-HWHTF |
| 9 | 137-4127 | 1 | Cap-Fuel |
| 11 | 115-2399 | 1 | Pump-Fuel |

| Ref. | Part Number | Qty. | Description |
|---|---|---|---|
| 11:1 | 115-2163 | 1 | Gasket-Pump, Fuel |
| 11:2 | 115-2162 | 1 | Cap-Pump, Fuel |
| 11:3 | 115-7818 | 1 | Fuel Filter ASM |
| 11:4 | 120-4812 | 1 | Float |
| 11:5 | 127-8691 | 1 | Sender-Fuel Level |
| 12 | 92-2379 | 2 | Clamp-Hose |
| 16 | 2412-146 | 2 | Clamp-Hose |
| 17 | 109-0287 | 1 | Hose-Fuel |
| 18 | 110-3254 | 1 | Hose-Fuel |

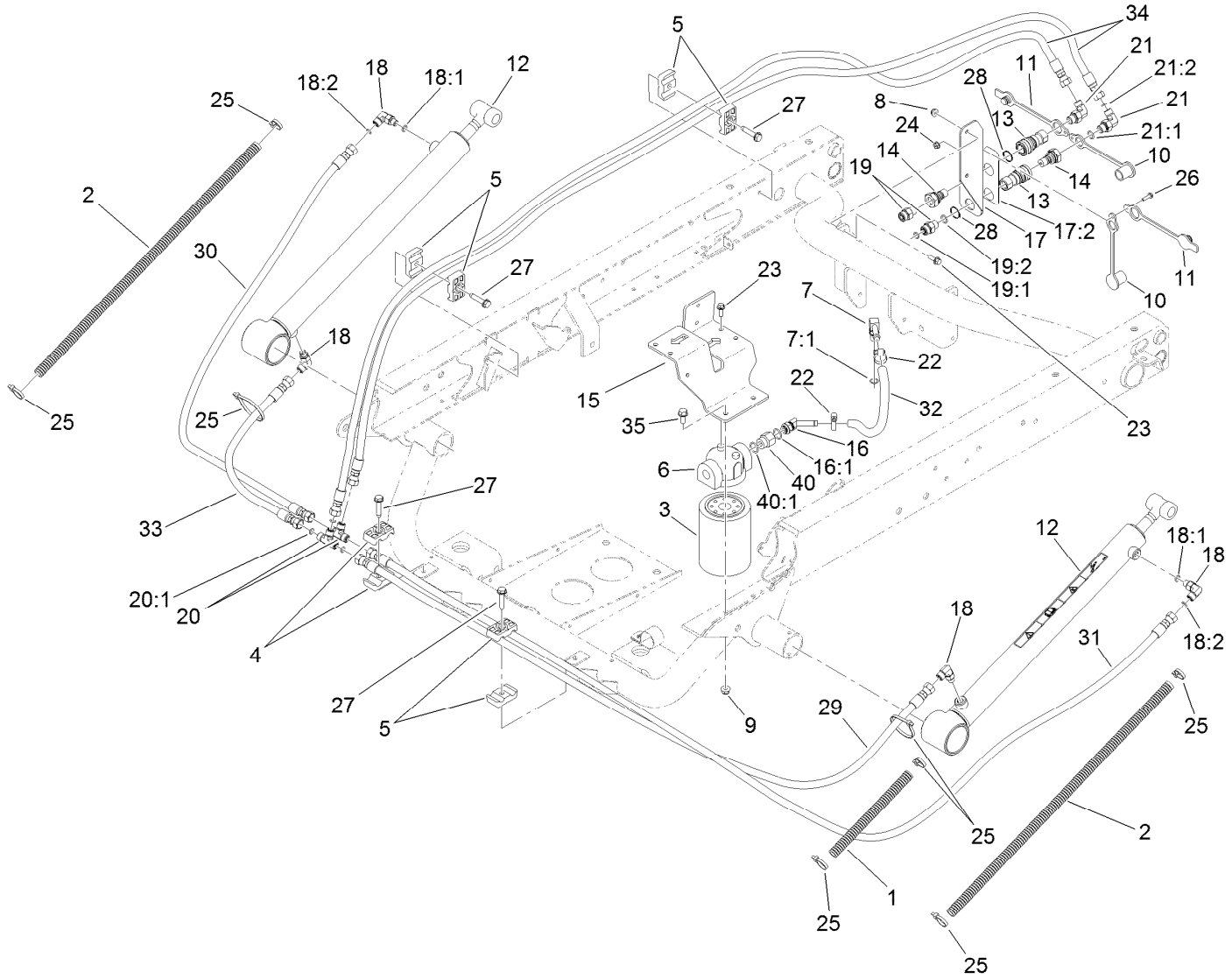


# Hydraulic Lift Cylinder Assembly

| Ref. | Part Number | Qty. | Description |
|---|---|---|---|
| 1 | 24-7922 | 1 | Conduit-Convoluted, Split |
| 2 | 24-7923 | 2 | Conduit-Convoluted, Split |
| 3 | 54-0110 | 1 | Filter-Oil, Transmission |
| 4 | 56-7971 | 2 | Clamp-Tube |
| 5 | 56-7976 | 6 | Clamp-Tube |
| 6 | 87-8780 | 1 | Head-Filter |
| 7 | 100-4887 | 1 | Fitting-Elbow, 90 |
| 7:1 | 237-42 | 1 | O-Ring |
| 8 | 104-7201 | 2 | Nut-HF, NI |
| 9 | 104-8300 | 2 | Nut-HF, NI |
| 10 | 106-7881 | 2 | Cap-Dust, HYD |
| 11 | 106-7882 | 2 | Plug-Dust, HYD |
| 12 | 133-0620 | 2 | HYD Cylinder ASM |
| 13 | 106-7968 | 2 | Coupler-Quick, Female |
| 14 | 106-7969 | 2 | Coupler-Quick, Male |
| 15 | 115-2168-03 | 1 | Bracket-Filter |
| 16 | 103-1807 | 1 | Fitting-Barbed, 45 DEG |
| 16:1 | 237-42 | 1 | O-Ring |
| 17 | 115-7715 | 1 | Coupler Bracket ASM |
| 17:2 | 115-7723 | 1 | Decal-Disconnect, Quick |
| 18 | 340-132 | 4 | Fitting-Elbow, 90 DEG |

| Ref. | Part Number | Qty. | Description |
|---|---|---|---|
| 18:1 | 237-78 | 1 | O-Ring |
| 18:2 | 237-21 | 1 | O-Ring |
| 19 | 340-2 | 2 | Fitting-Straight |
| 19:1 | 237-22 | 1 | O-Ring |
| 19:2 | 237-42 | 1 | O-Ring |
| 20 | 340-21 | 2 | Fitting |
| 20:1 | 237-21 | 3 | O-Ring |
| 21 | 340-82 | 2 | Fitting-Elbow, 90 DEG |
| 21:1 | 237-42 | 1 | O-Ring |
| 21:2 | 237-21 | 1 | O-Ring |
| 22 | 2412-36 | 2 | Clamp-Hose |
| 23 | 3234-4 | 4 | Screw-HHF |
| 24 | 3290-148 | 1 | Nut-HF |
| 25 | 3290-379 | 6 | Tie-Cable |
| 26 | 32105-13 | 1 | Screw-HWH |
| 27 | 32144-57 | 4 | Screw |
| 28 | 32151-83 | 2 | Ring-Snap |
| 29 | 115-7711 | 1 | Hose-HYD |
| 30 | 108-6508 | 1 | Hose-HYD |
| 31 | 104-3716 | 1 | Hose-HYD |
| 32 | 115-2228 | 1 | Hose-HYD |

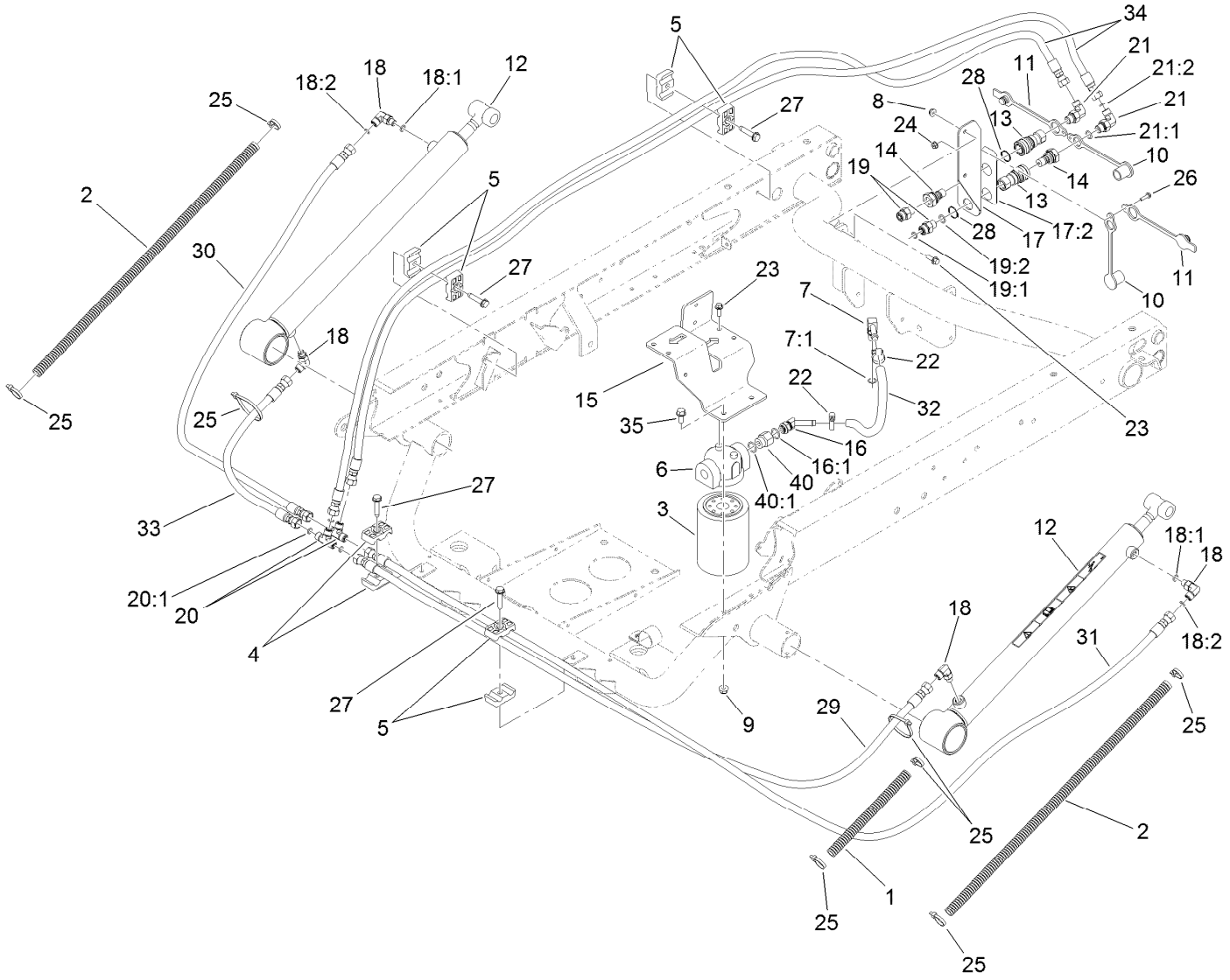


# Hydraulic Lift Cylinder Assembly (continued)

| Ref. | Part Number | Qty. | Description |
|---|---|---|---|
| 33 | 110-0931 | 1 | Hose-HYD |
| 34 | 106-3680 | 2 | Hose-HYD |
| 35 | 3234-5 | 2 | Screw-HHF |

| Ref. | Part Number | Qty. | Description |
|---|---|---|---|
| 40 | 353-397 | 1 | Reducer-Adapter |
| 40:1 | 237-79 | 1 | O-Ring |

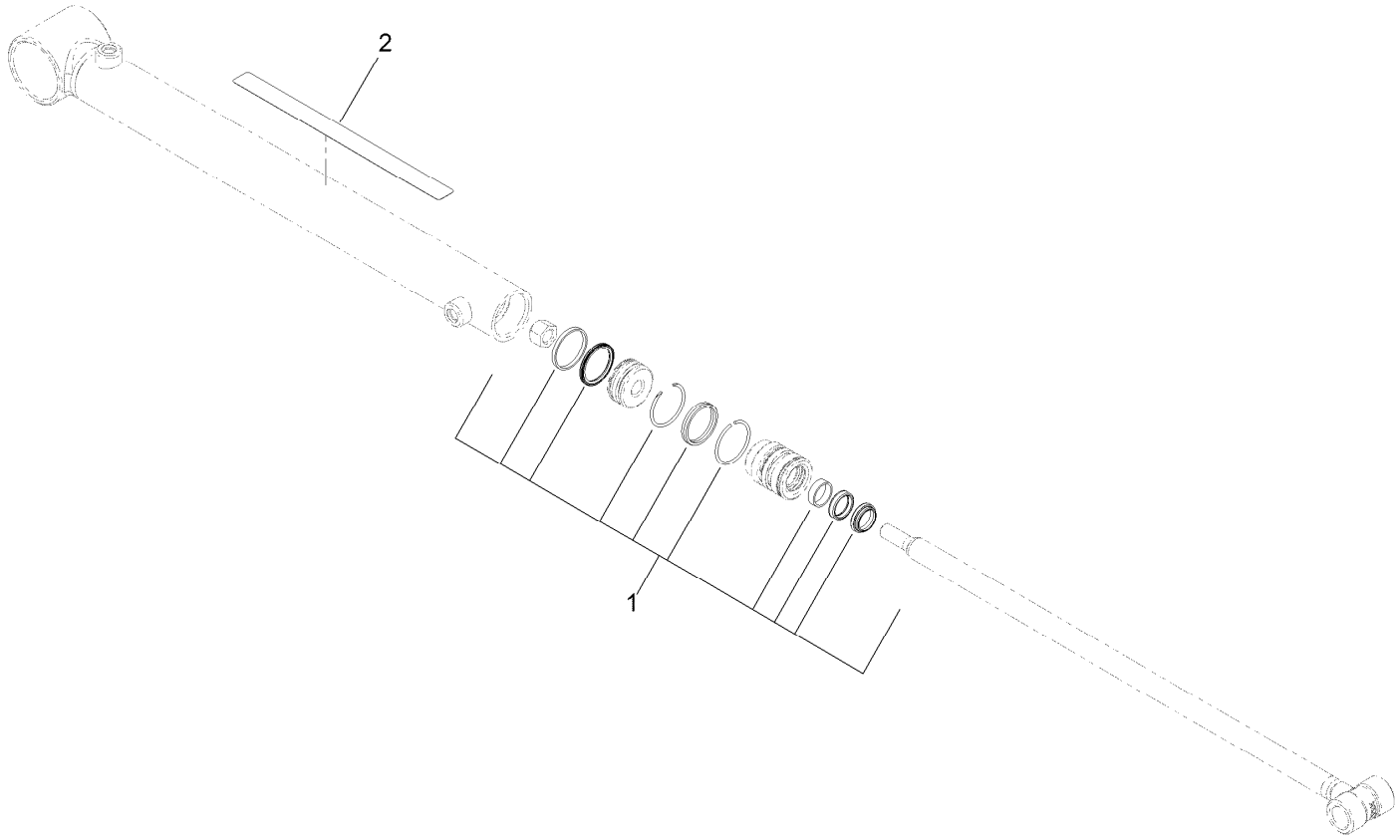


# Hydraulic Cylinder Assembly No. 133-0620

| *Ref.* | *Part Number* | *Qty.* | *Description* |
|---|---|---|---|
| 1 | 133-0618 | 1 | Cylinder Seal Kit |
| 2 | 93-9852 | 1 | Decal-Warning |

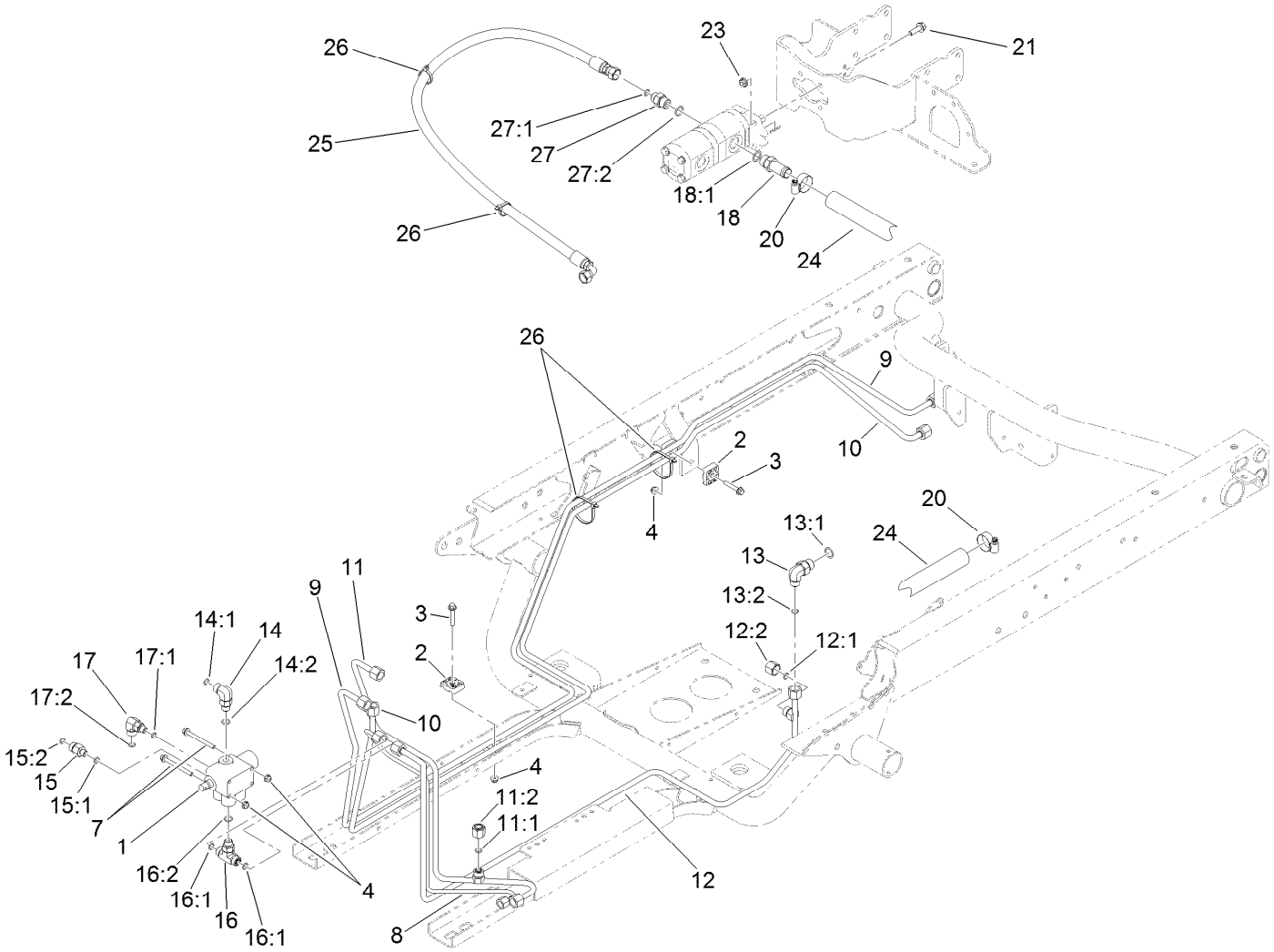


# Main Hydraulic Pump and Lift Valve Assembly

| Ref. | Part Number | Qty. | Description |
|---|---|---|---|
| 1 | 43-1950 | 1 | HYD Control Valve ASM |
| 2 | 56-7973 | 4 | Clamp-Tube |
| 3 | 94-5781 | 2 | Screw-HHF |
| 4 | 104-7201 | 4 | Nut-HF, NI |
| 7 | 114-8410 | 2 | Screw-HHF |
| 8 | 127-8605 | 1 | Tube-HYD |
| 9 | 115-2217 | 1 | Tube-HYD |
| 10 | 115-2218 | 1 | Tube-HYD |
| 11 | 127-8604 | 1 | Tube-HYD |
| 11:1 | 237-22 | 1 | O-Ring |
| 11:2 | 340-117 | 1 | Cap |
| 12 | 127-8752 | 1 | Tube-HYD |
| 12:1 | 237-22 | 1 | O-Ring |
| 12:2 | 340-117 | 1 | Cap |
| 13 | 340-18 | 1 | Fitting-HYD, 90 DEG |
| 13:1 | 237-79 | 1 | O-Ring |
| 13:2 | 237-22 | 1 | O-Ring |
| 14 | 340-77 | 1 | Fitting-Elbow, 90 DEG |
| 14:1 | 237-22 | 1 | O-Ring |
| 14:2 | 237-42 | 1 | O-Ring |

| Ref. | Part Number | Qty. | Description |
|---|---|---|---|
| 15 | 340-88 | 1 | Fitting-Straight |
| 15:1 | 237-22 | 1 | O-Ring |
| 15:2 | 237-78 | 1 | O-Ring |
| 16 | 340-94 | 1 | Adapter |
| 16:1 | 237-22 | 2 | O-Ring |
| 16:2 | 237-42 | 1 | O-Ring |
| 17 | 340-97 | 1 | Fitting-Elbow, 90 DEG |
| 17:1 | 237-22 | 1 | O-Ring |
| 17:2 | 237-78 | 1 | O-Ring |
| 18 | 354-136 | 1 | Fitting-STR |
| 18:1 | 237-80 | 1 | O-Ring |
| 20 | 2412-129 | 2 | Clamp-Hose |
| 21 | 3234-17 | 4 | Screw-HHF |
| 23 | 32128-20 | 4 | Nut-HF |
| 24 | 87-3670 | 1 | Hose-Suction |
| 25 | 121-6283 | 1 | Hose-HYD |
| 26 | 3290-379 | 4 | Tie-Cable |
| 27 | 340-3 | 1 | Fitting-Straight |
| 27:1 | 237-22 | 1 | O-Ring |
| 27:2 | 237-79 | 1 | O-Ring |

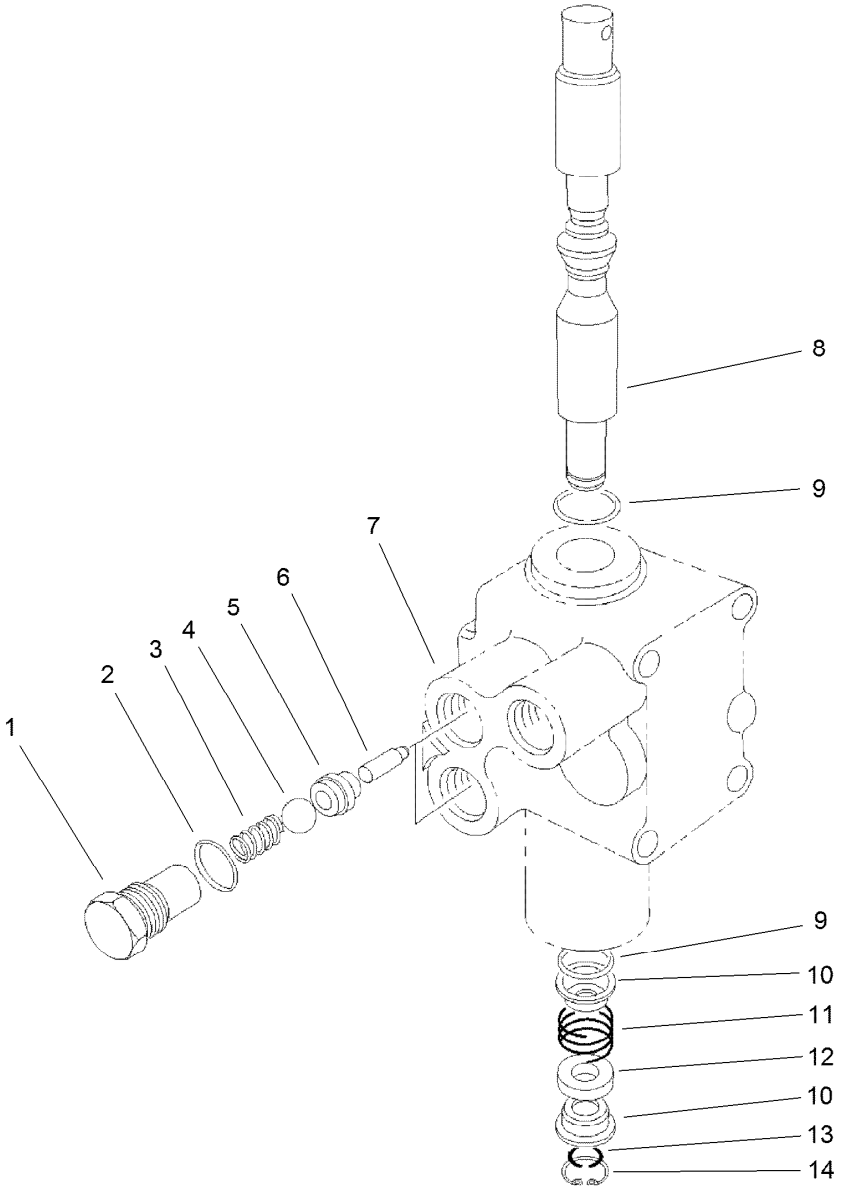


# Control Valve Assembly No. 43-1950

| Ref. | Part Number | Qty. | Description |
|---|---|---|---|
| 1 | 22-8330 | 2 | Plug |
| 2 | 237-42 | 2 | O-Ring |
| 3 | 22-8340 | 2 | Spring |
| 4 | 22-8350 | 2 | Ball |
| 5 | 22-8370 | 2 | Seat-Valve |
| 6 | 22-8360 | 2 | Pin |
| 7 | | 1 | Body ● |
| 8 | 22-8420 | 1 | Spool |
| 9 | 22-8500 | 2 | O-Ring |
| 10 | 22-8380 | 2 | Retainer |
| 11 | 22-8410 | 1 | Spring |
| 12 | 23-3030 | 1 | Spacer |
| 13 | 22-8480 | 1 | Ring-Snap |
| 14 | 22-8490 | 1 | Ring-Snap |

● Not serviced separately

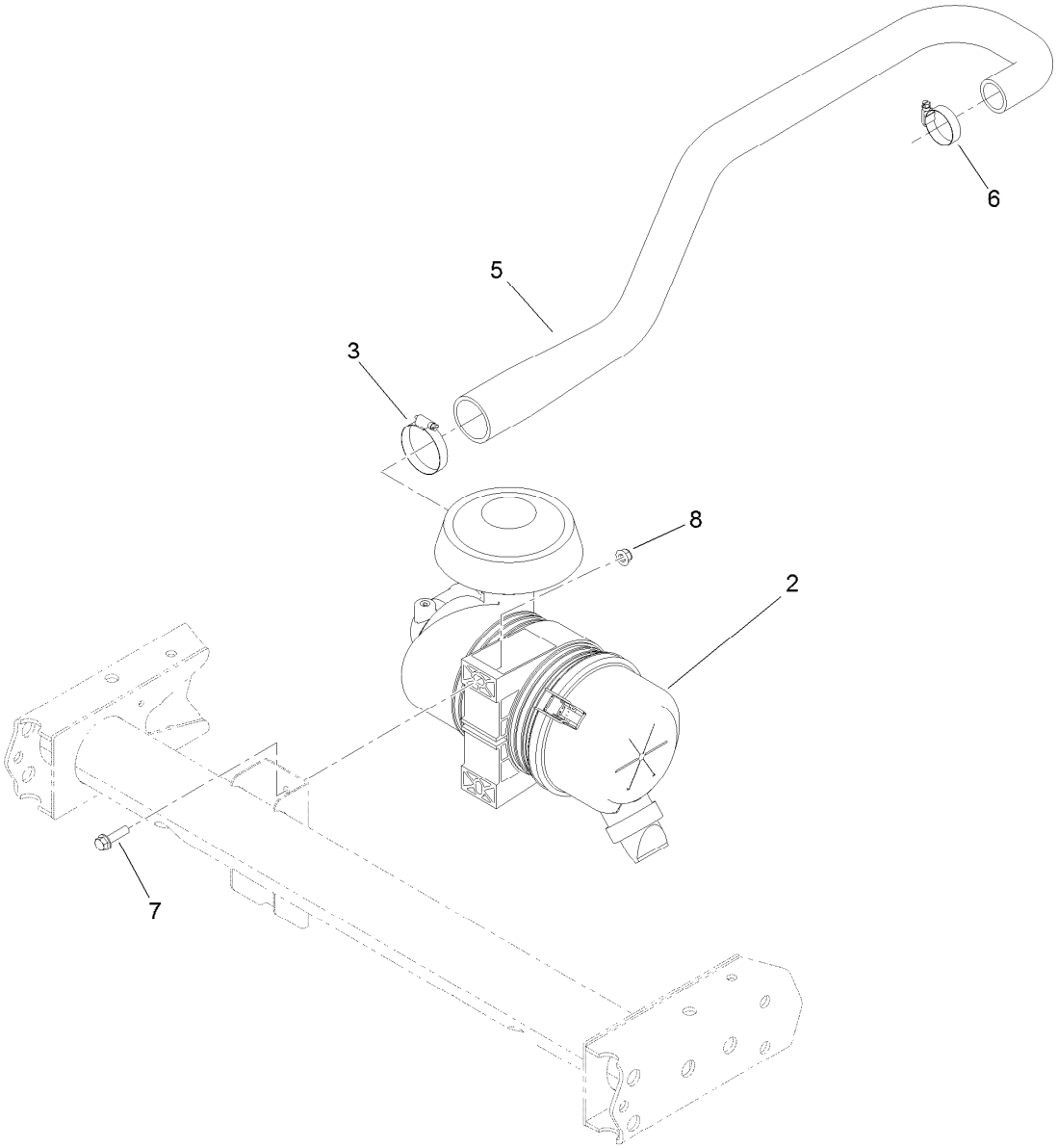


# Air Cleaner Assembly

| Ref. | Part Number | Qty. | Description |
|---|---|---|---|
| 2 | 138-5650 | 1 | Air Cleaner ASM |
| 3 | 2412-130 | 1 | Clamp-Hose |
| 5 | 120-5098 | 1 | Hose-Intake, Air |
| 6 | 2412-3 | 1 | Clamp-Hose |
| 7 | 3234-36 | 2 | Screw-HHF |
| 8 | 104-8300 | 2 | Nut-HF, NI |

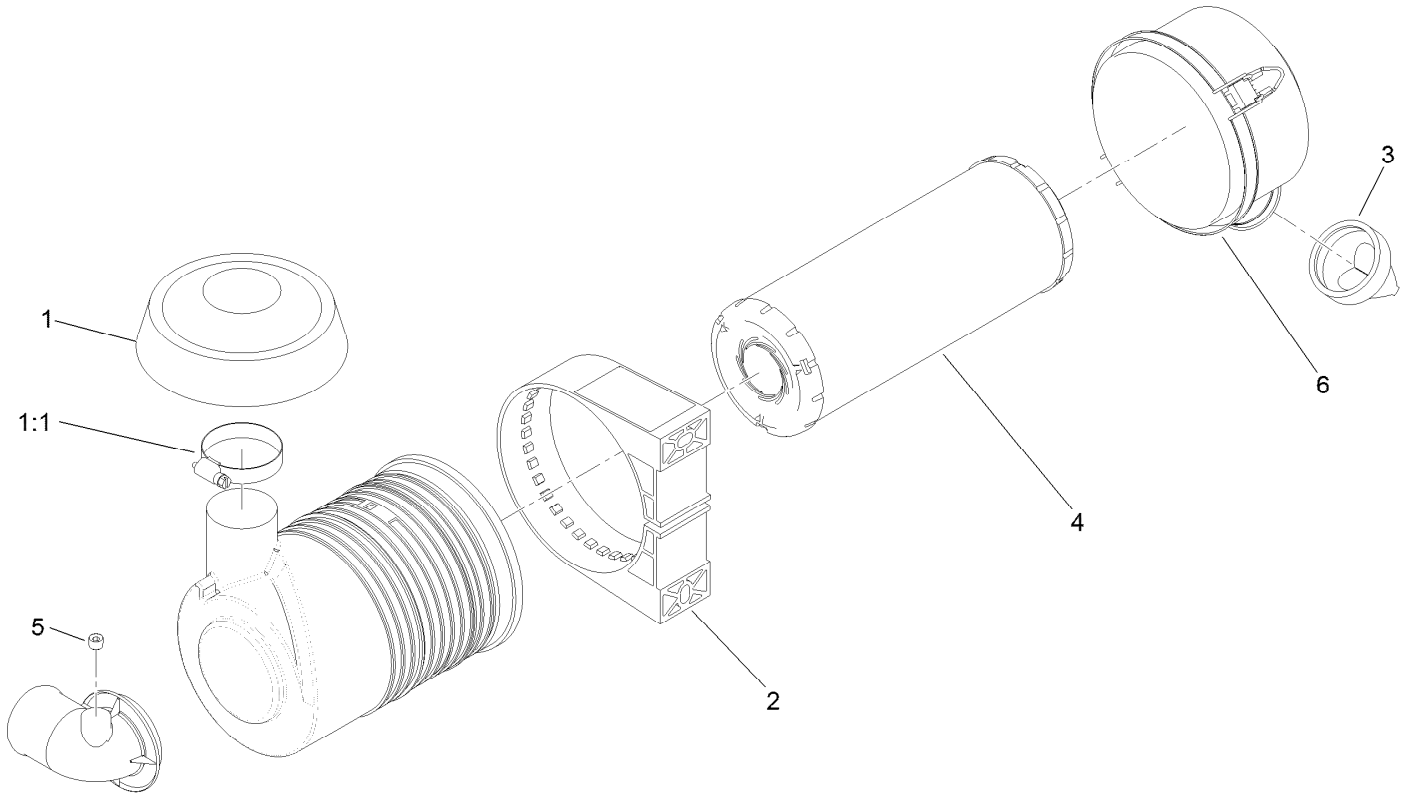


# Air Cleaner Assembly No. 138-5650

| *Ref.* | *Part Number* | *Qty.* | *Description* |
|---|---|---|---|
| 1 | 105-2539 | 1 | Cap |
| 1:1 | 2412-130 | 1 | Clamp-Hose |
| 2 | 98-4525 | 1 | Bracket-Cleaner, Air |
| 3 | 87-9400 | 1 | Valve-Vacuator |
| 4 | 108-3810 | 1 | Filter-Air |
| 5 | 285-17 | 1 | Plug-Pipe |
| 6 | 98-9771 | 1 | Cover ASM |

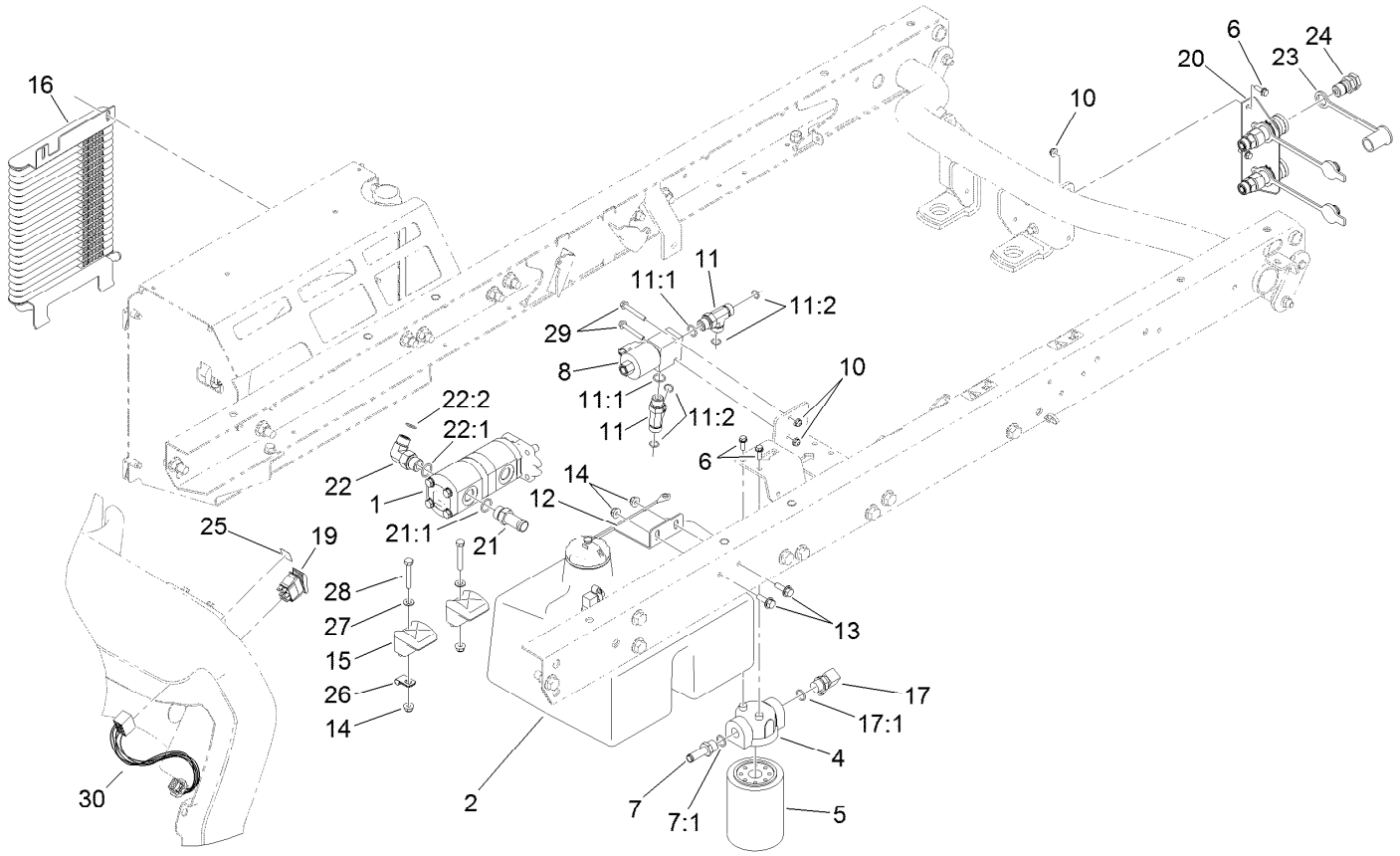


# High Flow Assembly

| Ref. | Part Number | Qty. | Description |
|---|---|---|---|
| 1 | 115-7787 | 1 | Hydraulic Pump ASM |
| 2 | 114-8435 | 1 | Tank ASM |
| 4 | 87-8780 | 1 | Head-Filter |
| 5 | 54-0110 | 1 | Filter-Oil, Transmission |
| 6 | 3234-4 | 4 | Screw-HHF |
| 7 | 354-121 | 1 | Fitting-STR |
| 7:1 | 237-79 | 1 | O-Ring |
| 8 | 115-2252 | 1 | HYD Manifold ASM |
| 10 | 104-7201 | 4 | Nut-HF, NI |
| 11 | 340-109 | 2 | Fitting-Tee |
| 11:1 | 237-79 | 1 | O-Ring |
| 11:2 | 237-30 | 2 | O-Ring |
| 12 | 115-2166 | 1 | Support-Tank |
| 13 | 3234-29 | 2 | Screw-HHF |
| 14 | 104-8300 | 4 | Nut-HF, NI |
| 15 | 107-4543 | 2 | Clamp |
| 16 | 133-0611 | 1 | Cooler-Oil, HD |

| Ref. | Part Number | Qty. | Description |
|---|---|---|---|
| 17 | 354-120 | 1 | Fitting-Elbow, 90 |
| 17:1 | 237-79 | 1 | O-Ring |
| 19 | 105-4232 | 1 | Switch |
| 20 | 114-8434 | 1 | Coupler ASM |
| 21 | 354-136 | 1 | Fitting-STR |
| 21:1 | 237-80 | 1 | O-Ring |
| 22 | 340-105 | 1 | Fitting-Elbow, 90 DEG |
| 22:1 | 237-80 | 1 | O-Ring |
| 22:2 | 237-30 | 1 | O-Ring |
| 23 | 105-4170 | 1 | Coupler-Male |
| 24 | 105-7963 | 1 | Cap-Dust |
| 25 | 115-7756 | 1 | Decal-HYD, High Flow |
| 26 | 2412-113 | 1 | Clamp-R |
| 27 | 3256-23 | 2 | Washer-Plain |
| 28 | 322-10 | 2 | Screw-HH |
| 29 | 321-44 | 2 | Screw-HHF |
| 30 | 105-8513 | 1 | Harness-Wire |

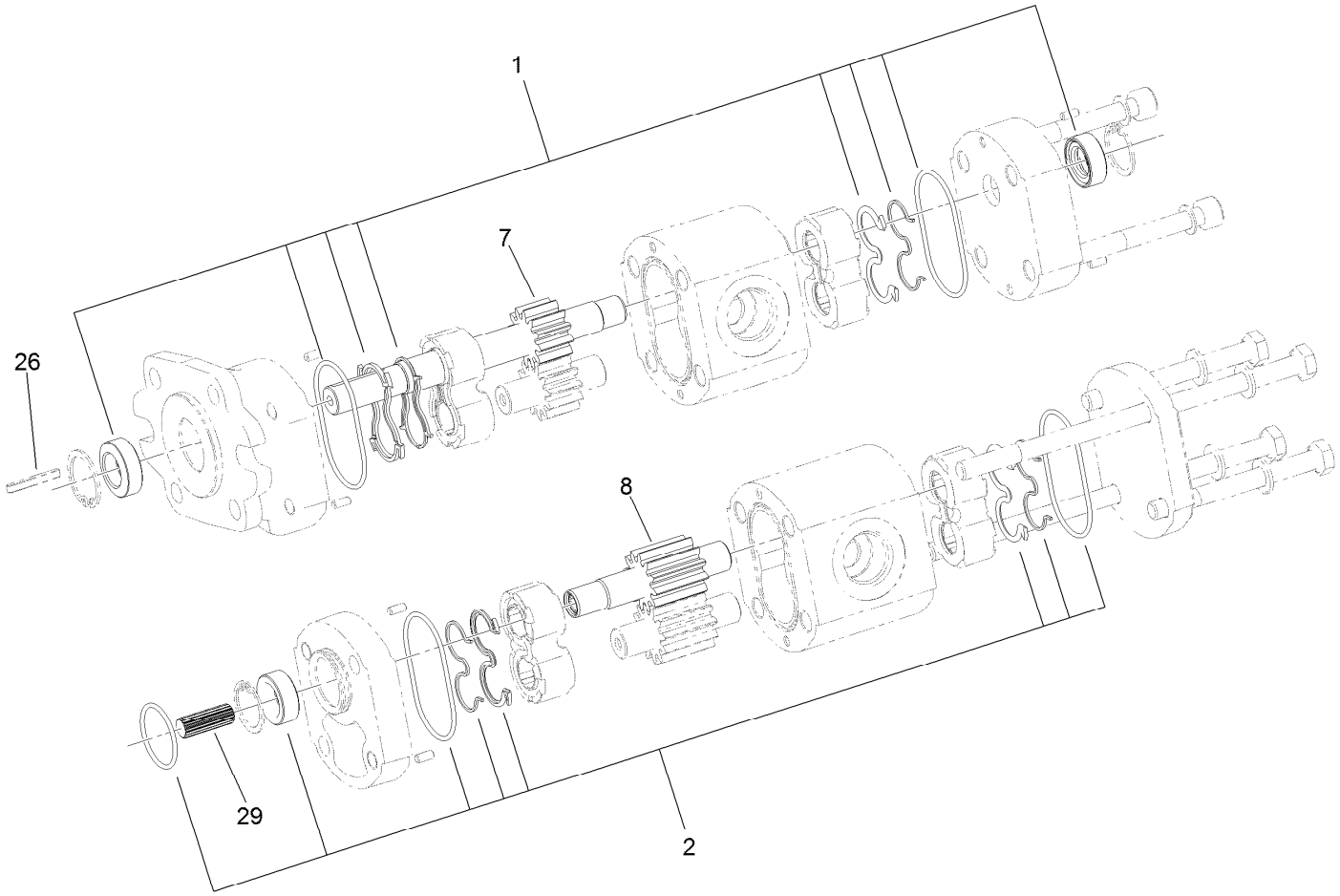


# Hydraulic Pump Assembly No. 115-7787

| *Ref.* | *Part Number* | *Qty.* | *Description* |
|---|---|---|---|
| 1 | 115-8696 | 1 | Seal Kit |
| 2 | 115-8697 | 1 | Seal Kit |
| 7 | 136-1197 | 1 | Shaft-Drive |
| 8 | 136-1198 | 1 | Gear-Drive |
| 26 | 115-7855 | 1 | Key-Square |
| 29 | 119-0653 | 1 | Coupling-Splined |

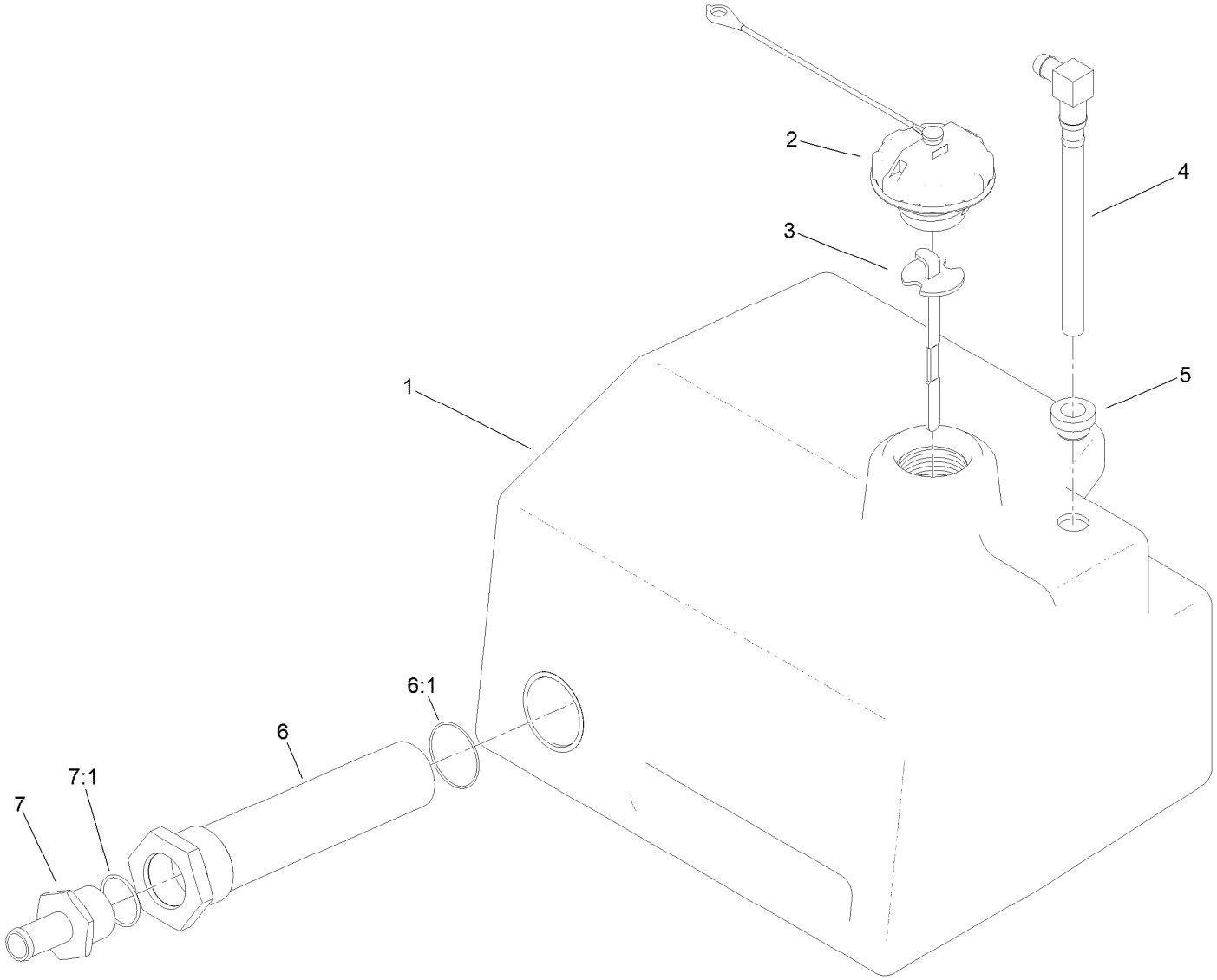


# Tank Assembly No. 114-8435

| Ref. | Part Number | Qty. | Description |
|---|---|---|---|
| 1 | 114-8364 | 1 | Tank-HYD |
| 2 | 115-7877 | 1 | Cap-Oil, HYD |
| 3 | 115-7870 | 1 | Dipstick-Oil |
| 4 | 104-0791 | 1 | Pipe-Stand |
| 5 | 104-0790 | 1 | Bushing |
| 6 | 115-2230 | 1 | Strainer-In Tank |
| 6:1 | 340-136 | 1 | O-Ring |
| 7 | 99-6932 | 1 | Fitting-STR |
| 7:1 | 237-117 | 1 | O-Ring |

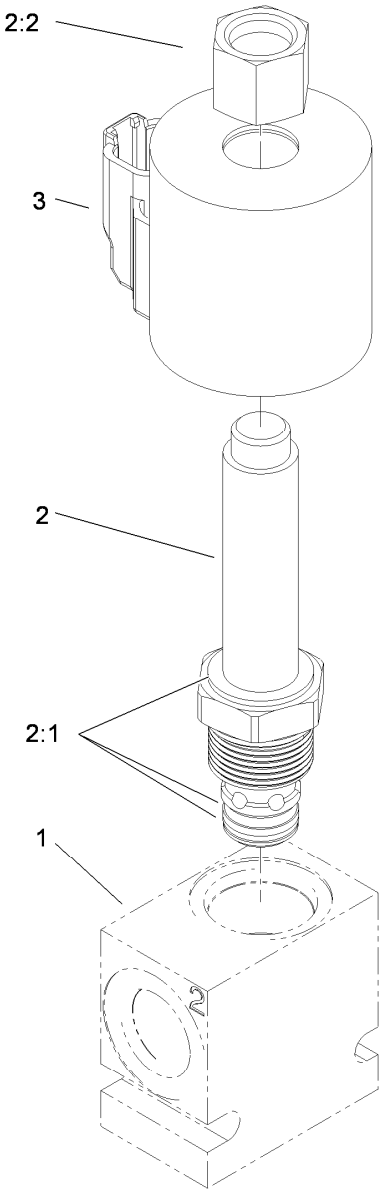


# Hydraulic Manifold Assembly No. 115-2252

| *Ref.* | *Part Number* | *Qty.* | *Description* |
|---|---|---|---|
| 1 | | 1 | Housing ● |
| 2 | 110-8905 | 1 | Valve-Relief, Solenoid |
| 2:1 | 110-6316 | 1 | Seal Kit |
| 2:2 | 130-8180 | 1 | Nut-Coil (9/16-24 Unef-2B) |
| 3 | 115-3021 | 1 | Coil-12V |

● Not serviced separately

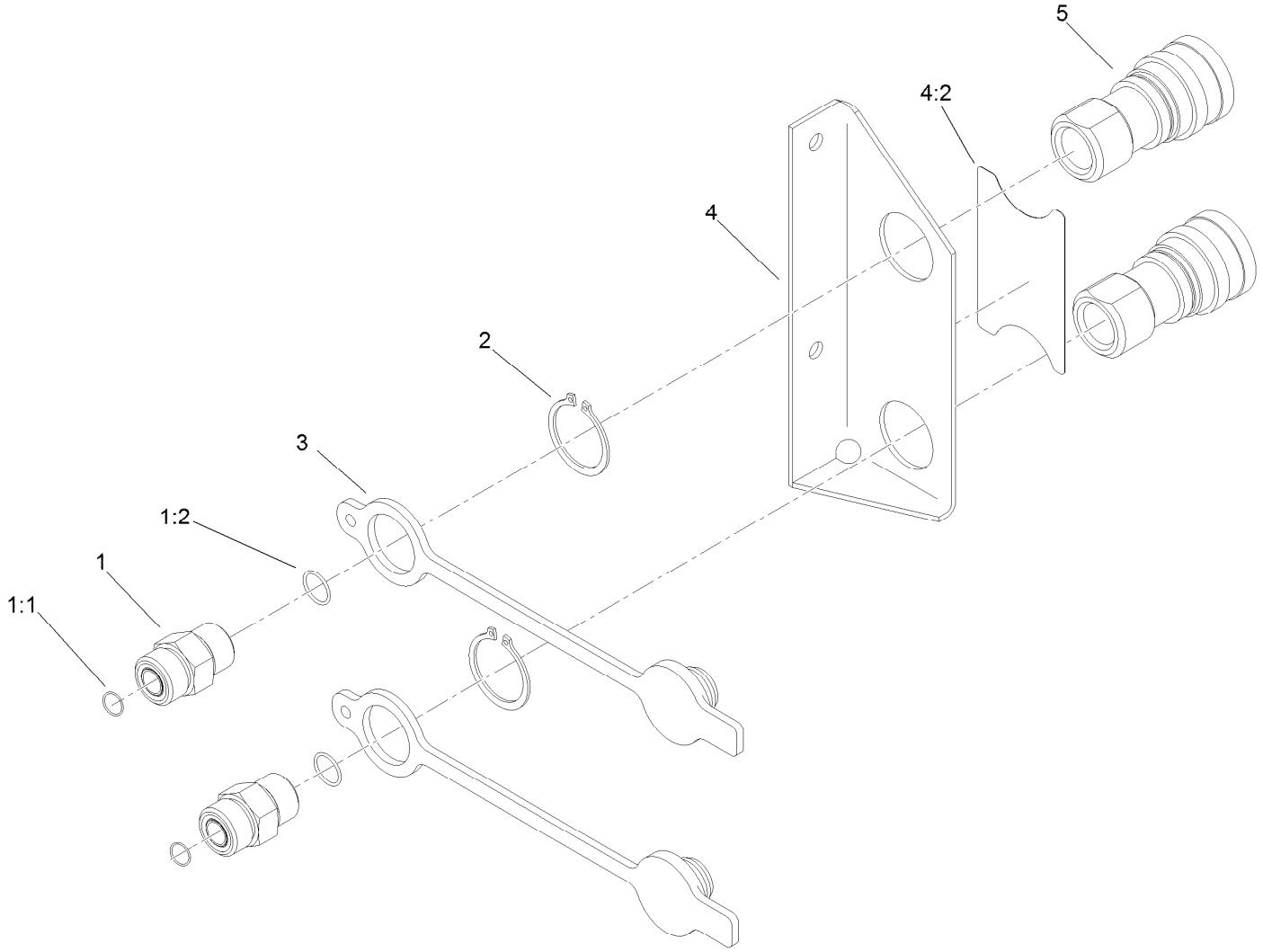


# Coupler Assembly No. 114-8434

| *Ref.* | *Part Number* | *Qty.* | *Description* |
|---|---|---|---|
| 1 | 340-4 | 2 | Fitting-Straight |
| 1:1 | 237-30 | 1 | O-Ring |
| 1:2 | 237-79 | 1 | O-Ring |
| 2 | 32120-2 | 2 | Ring-Retaining |
| 3 | 105-7962 | 2 | Plug-Dust |
| 4 | 105-7978 | 1 | Coupler Bracket ASM |
| 4:2 | 139-3341 | 1 | Decal-Couplers, Quick |
| 5 | 105-4169 | 2 | Coupler-Female |

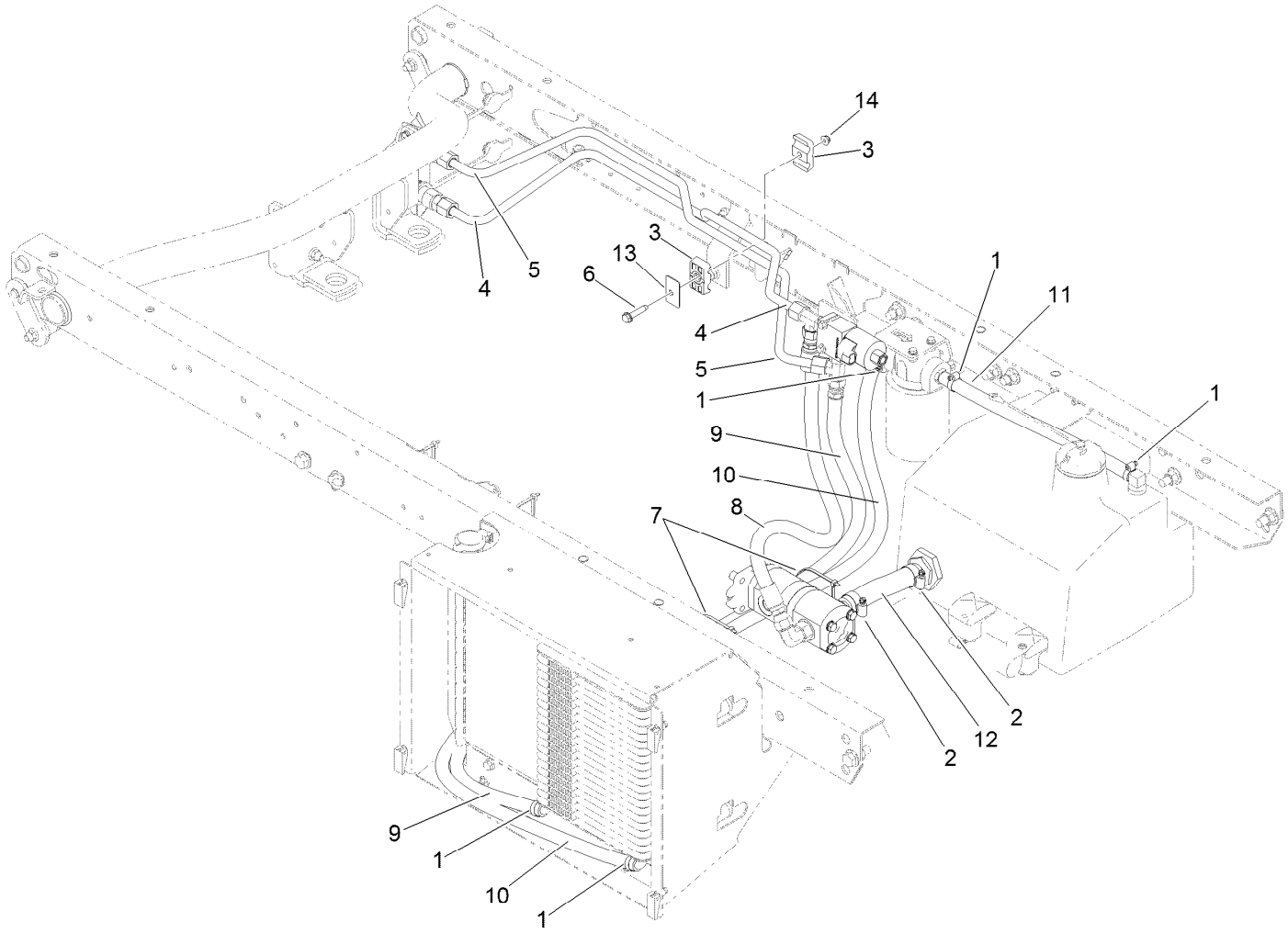


# High Flow Hose Assembly

| Ref. | Part Number | Qty. | Description |
|---|---|---|---|
| 1 | 2412-36 | 5 | Clamp-Hose |
| 2 | 2412-129 | 2 | Clamp-Hose |
| 3 | 56-7976 | 2 | Clamp-Tube |
| 4 | 115-2248 | 1 | Tube-HYD |
| 5 | 115-2249 | 1 | Tube-HYD |
| 6 | 32105-18 | 1 | Screw-HHF |
| 7 | 3290-379 | 2 | Tie-Cable |
| 8 | 114-8439 | 1 | HYD Hose ASM |
| 9 | 93-5356 | 1 | Hose-HYD |
| 10 | 114-8437 | 1 | Hose-HYD |
| 11 | 114-8438 | 1 | Hose-HYD |
| 12 | 114-8442 | 1 | Hose-HYD |
| 13 | 69-9760 | 1 | Plate-Cover |
| 14 | 104-7201 | 1 | Nut-HF, NI |

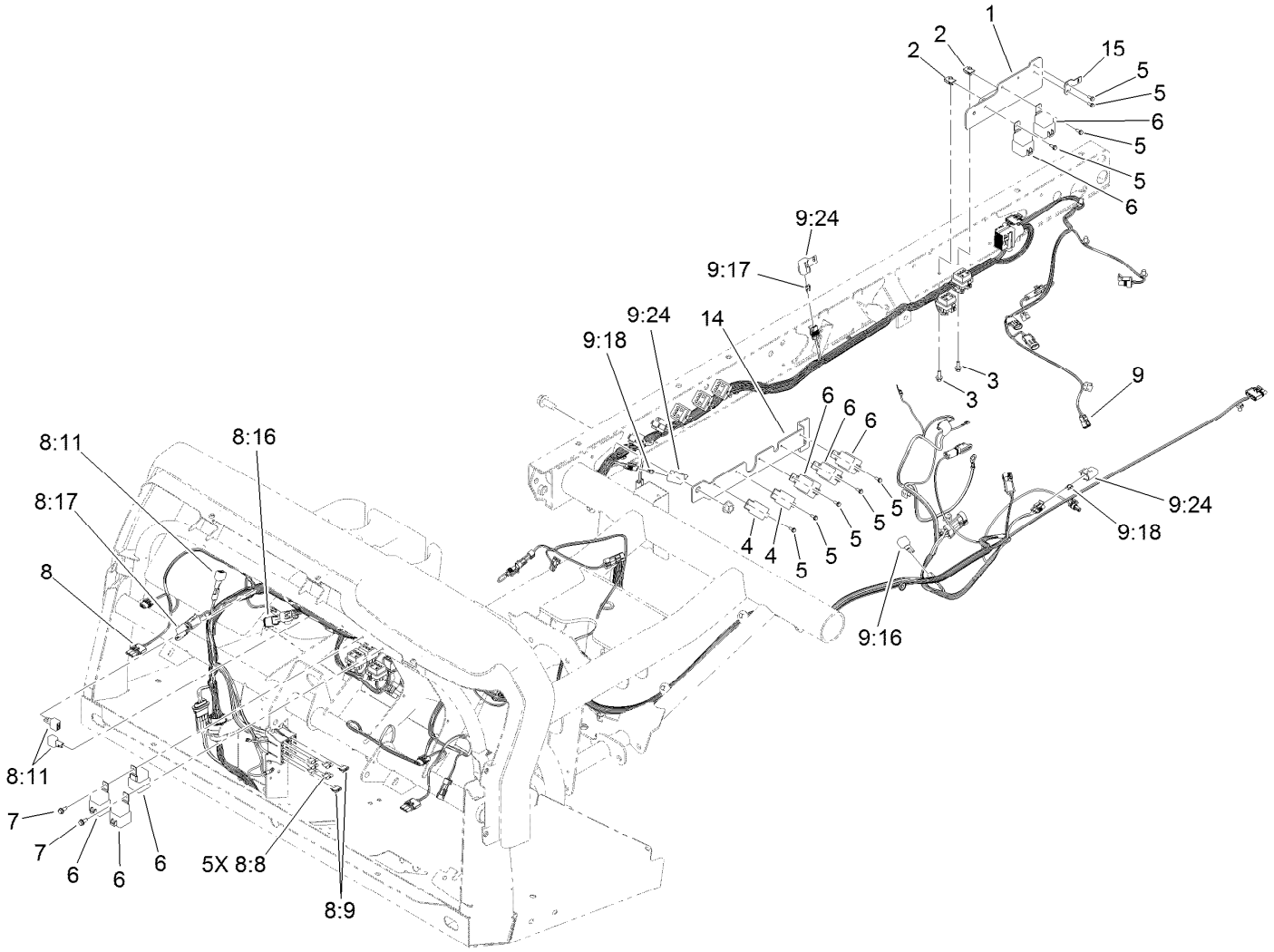


# Front and Rear Wire Harness Assembly

| Ref. | Part Number | Qty. | Description |
|---|---|---|---|
| 1 | 132-6714-03 | 1 | Bracket-Mount, Filter |
| 2 | 107069 | 2 | Clip |
| 3 | 3234-4 | 2 | Screw-HHF |
| 4 | 99-7435 | 2 | Relay |
| 5 | 32144-112 | 9 | Screw-HWH |
| 6 | 99-7430 | 8 | Relay-Mini |
| 7 | 32144-10 | 2 | Screw-HWH |
| 8 | 122-1448 | 1 | Harness-Wire, Front |
| 8:8 | 218-578 | 5 | Fuse-Blade, 10 Amp |
| 8:9 | 109355 | 2 | Fuse-Blade, 15 Amp |

| Ref. | Part Number | Qty. | Description |
|---|---|---|---|
| 8:11 | 100-4918 | 3 | Diode |
| 8:16 | 32180-106 | 1 | Resistor-220K |
| 8:17 | 32180-156 | 1 | Cap-Plug, 6 Way |
| 9 | 122-0889 | 1 | Harness-Wire, Rear |
| 9:16 | 100-4918 | 1 | Diode |
| 9:17 | 121-8867 | 1 | Fuse-Mini Blade, 15 Amp |
| 9:18 | 121-8870 | 2 | Fuse-Mini Blade, 30 Amp |
| 9:24 | 32180-101 | 3 | Cover-Fuse, Single |
| 14 | 132-6713-03 | 1 | Bracket-Mount, Relay |
| 15 | 132-6716 | 1 | Mount-Harness, Engine |

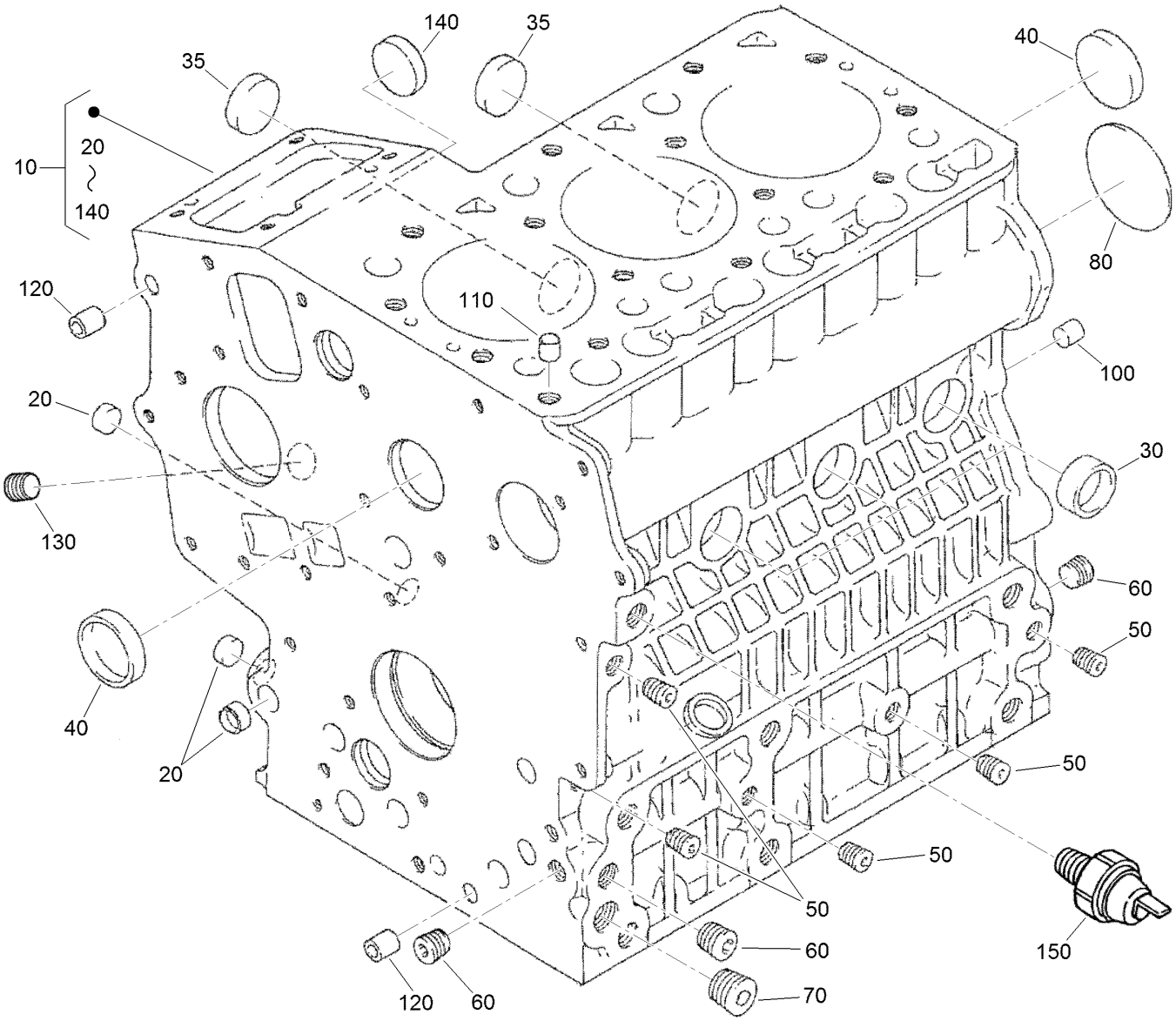


# Crankcase Assembly

| Ref. | Part Number | Qty. | Description |
|---|---|---|---|
| 10 | 125-9060 | 1 | Crankcase ASM |
| 20 | 100-2019 | 3 | Cap-Sealing |
| 30 | 100-2020 | 3 | Cap-Sealing |
| 35 | 110-3702 | 2 | Cap-Sealing |
| 40 | 98-9398 | 2 | Cap-Sealing |
| 50 | 98-9687 | 5 | Plug |
| 60 | 98-7487 | 3 | Plug |
| 70 | 98-7488 | 1 | Plug |
| 80 | 100-1851 | 1 | Plug-Expansion |
| 100 | 98-9377 | 2 | Pin-Straight |
| 110 | 98-7506 | 1 | Pin-Pipe |
| 120 | 100-2051 | 2 | Pin-Pipe |
| 130 | 98-7488 | 1 | Plug |
| 140 | 100-1991 | 1 | Cover-Fuel, Camshaft |
| 150 | 98-9416 | 1 | Switch-Oil |

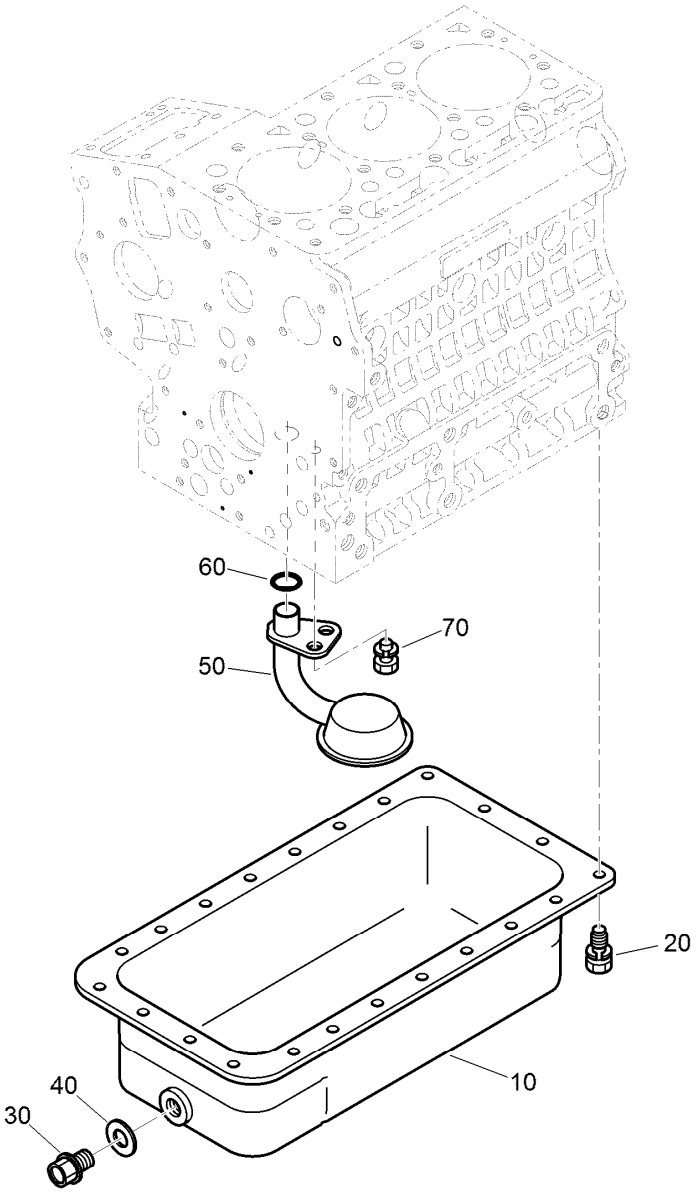


# Oil Pan Assembly

| Ref. | Part Number | Qty. | Description |
|---|---|---|---|
| 10 | 125-9056 | 1 | Oil Pan ASM |
| 20 | 98-9350 | 22 | Bolt |
| 30 | 114-8151 | 1 | Plug-Drain |
| 40 | 98-7524 | 1 | Gasket |
| 50 | 125-9052 | 1 | Tube-Pick Up, Oil |
| 60 | 105-3776 | 1 | O-Ring |
| 70 | 100-9195 | 1 | Bolt |

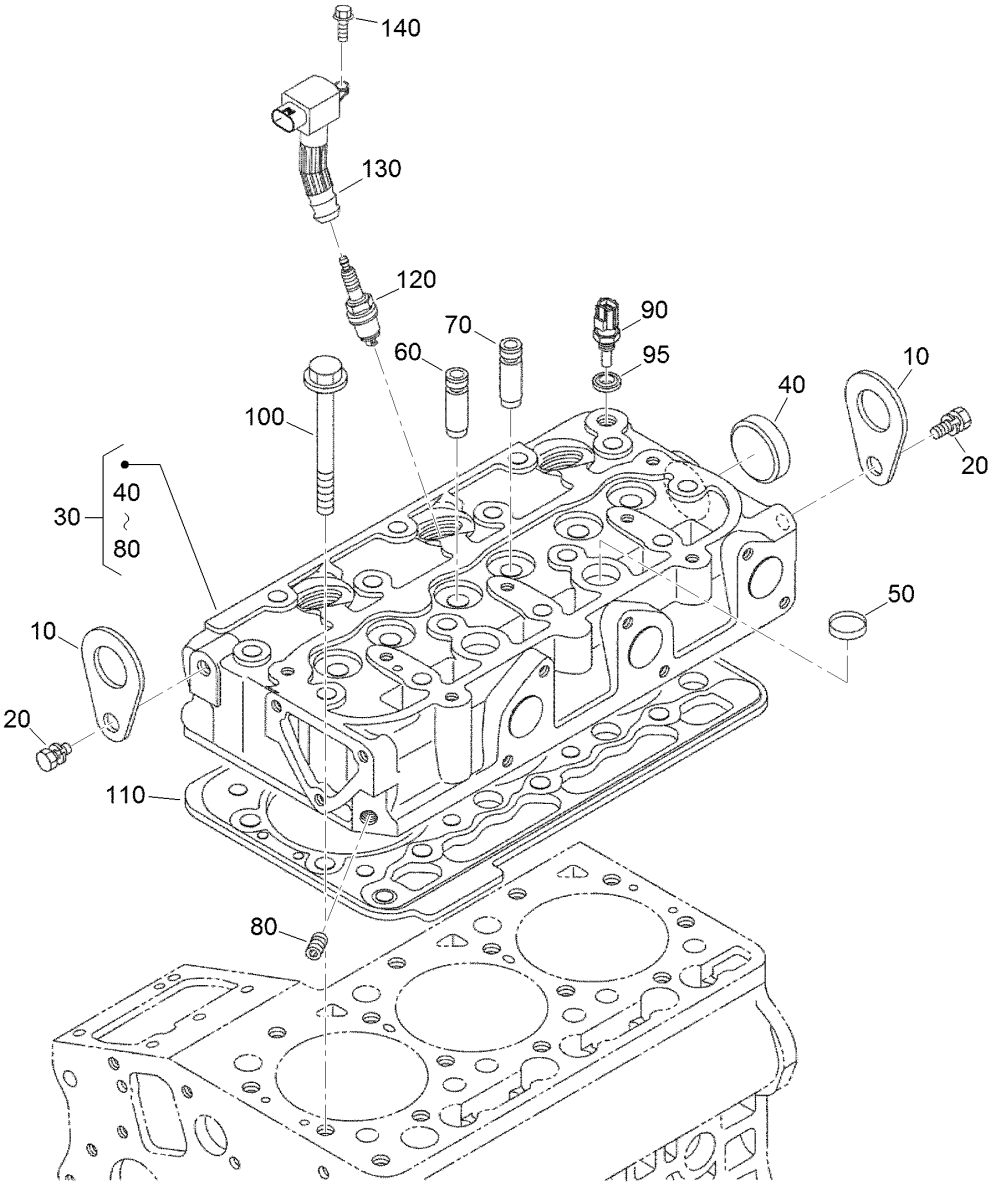


# Cylinder Head Assembly

| Ref. | Part Number | Qty. | Description |
|---|---|---|---|
| 10 | 98-7531 | 2 | Hook-Engine |
| 20 | 98-7526 | 2 | Bolt |
| 30 | 125-9119 | 1 | Cylinder Head ASM |
| 40 | 105-3705 | 1 | Cap-Sealing |
| 50 | 98-9389 | 2 | Cap-Sealing |
| 60 | 100-1882 | 3 | Guide-Valve, Inlet |
| 70 | 100-1883 | 3 | Guide-Valve, Exhaust |
| 80 | 98-9687 | 1 | Plug |
| 90 | 125-9102 | 1 | Sensor-Temperature, Water |
| 95 | 125-9096 | 1 | Gasket |
| 100 | 100-1820 | 14 | Bolt-Head, Cylinder |
| 110 | 125-9113 | 1 | Gasket-Head |
| 120 | 125-9139 | 3 | Spark Plug |
| 130 | 125-9145 | 3 | Coil-Ignition |
| 140 | 99-8363 | 3 | Bolt-Flange |

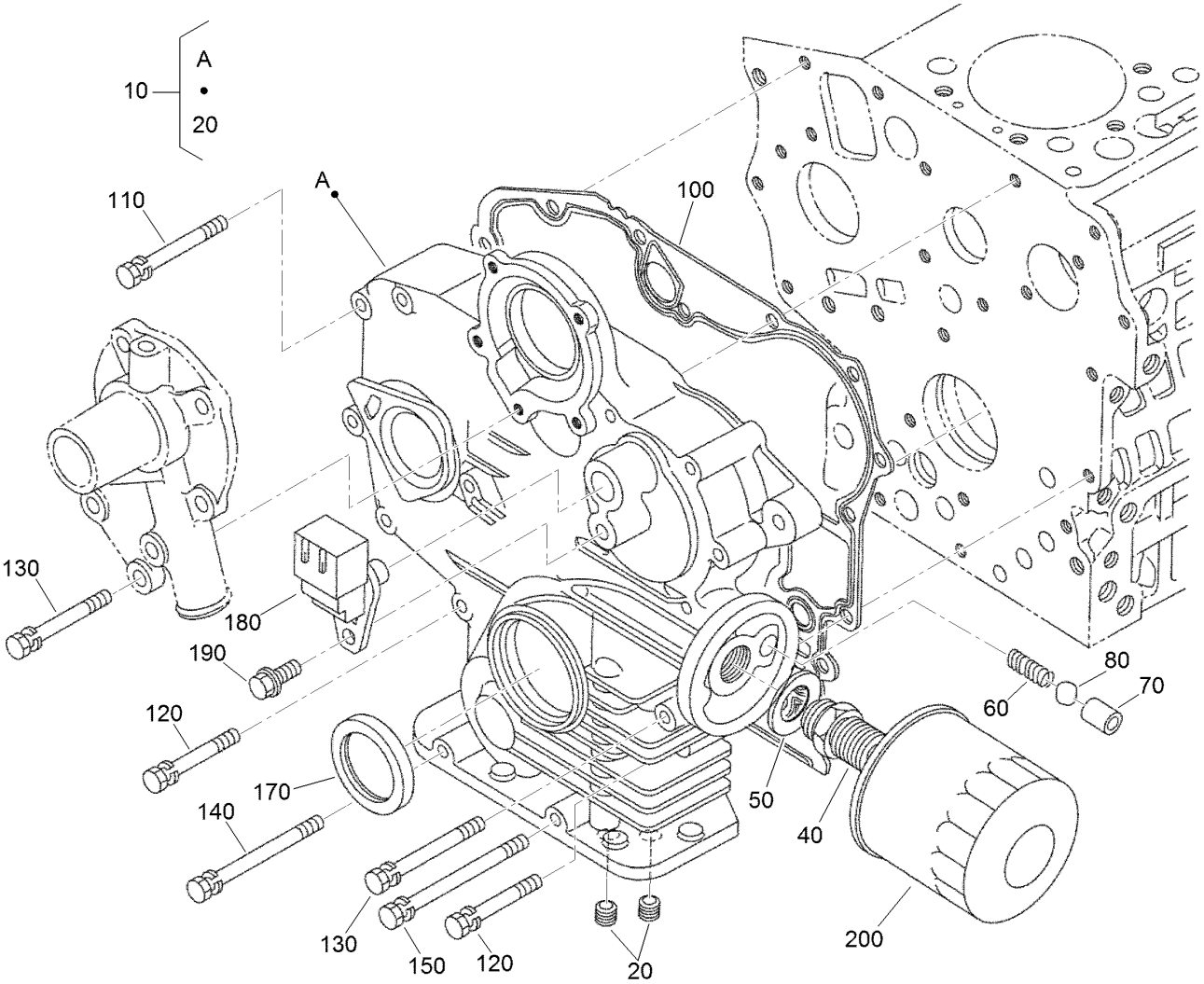


# Gear Case and Oil Filter Cartridge Assembly

| Ref. | Part Number | Qty. | Description |
|---|---|---|---|
| 10 | 125-9151 | 1 | Gear Case ASM |
| 20 | 98-7488 | 2 | Plug |
| 40 | 98-9388 | 1 | Joint-Pipe |
| 50 | 100-1926 | 1 | Washer-Plain |
| 60 | 100-2004 | 1 | Spring |
| 70 | 100-1894 | 1 | Seat-Valve |
| 80 | 100-1792 | 1 | Ball |
| 100 | 117-0327 | 1 | Gasket-Case, Gear |
| 110 | 99-8320 | 1 | Bolt |

| Ref. | Part Number | Qty. | Description |
|---|---|---|---|
| 120 | 98-9356 | 10 | Bolt |
| 130 | 100-1922 | 2 | Bolt |
| 140 | 98-9357 | 1 | Bolt |
| 150 | 110-3710 | 1 | Bolt |
| 170 | 120-7852 | 1 | Seal-Oil |
| 180 | 125-9142 | 1 | Sensor |
| 190 | 99-8363 | 1 | Bolt-Flange |
| 200 | 115-8189 | 1 | Filter-Oil, Engine |

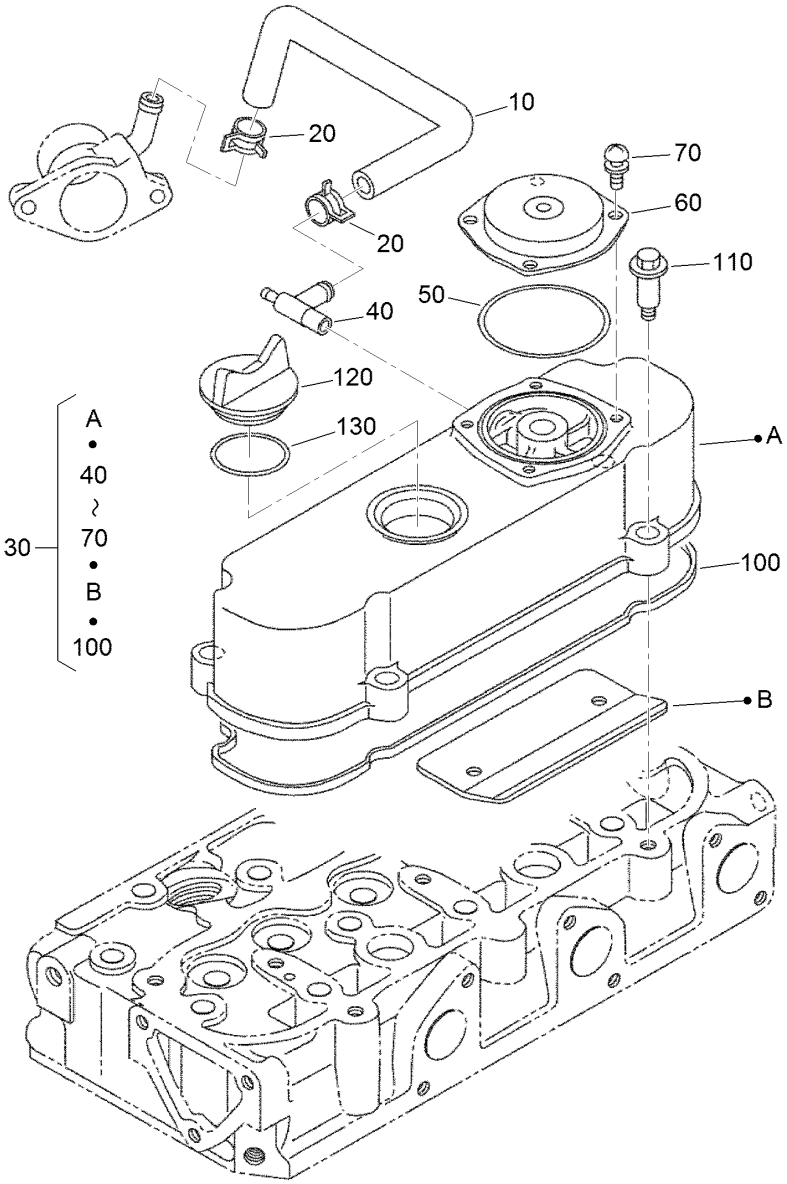


# Cylinder Head Cover Assembly

| Ref. | Part Number | Qty. | Description |
|---|---|---|---|
| 10 | 125-9120 | 1 | Tube-Breather |
| 20 | 98-9579 | 2 | Band-Pipe |
| 30 | 125-9129 | 1 | Cylinder Head Cover ASM |
| 40 | 125-9117 | 1 | Pipe-Breather |
| 50 | 110-3846 | 1 | O Ring-Breather |
| 60 | 108-7060 | 1 | Cover-Breather |
| 70 | 98-9364 | 4 | Screw (With Washer) |
| 100 | 125-9130 | 1 | Gasket-Cover, Head |
| 110 | 108-7063 | 4 | Bolt |
| 120 | 107-9075 | 1 | Plug-Filler, Oil |
| 130 | 99-3446 | 1 | O-Ring |

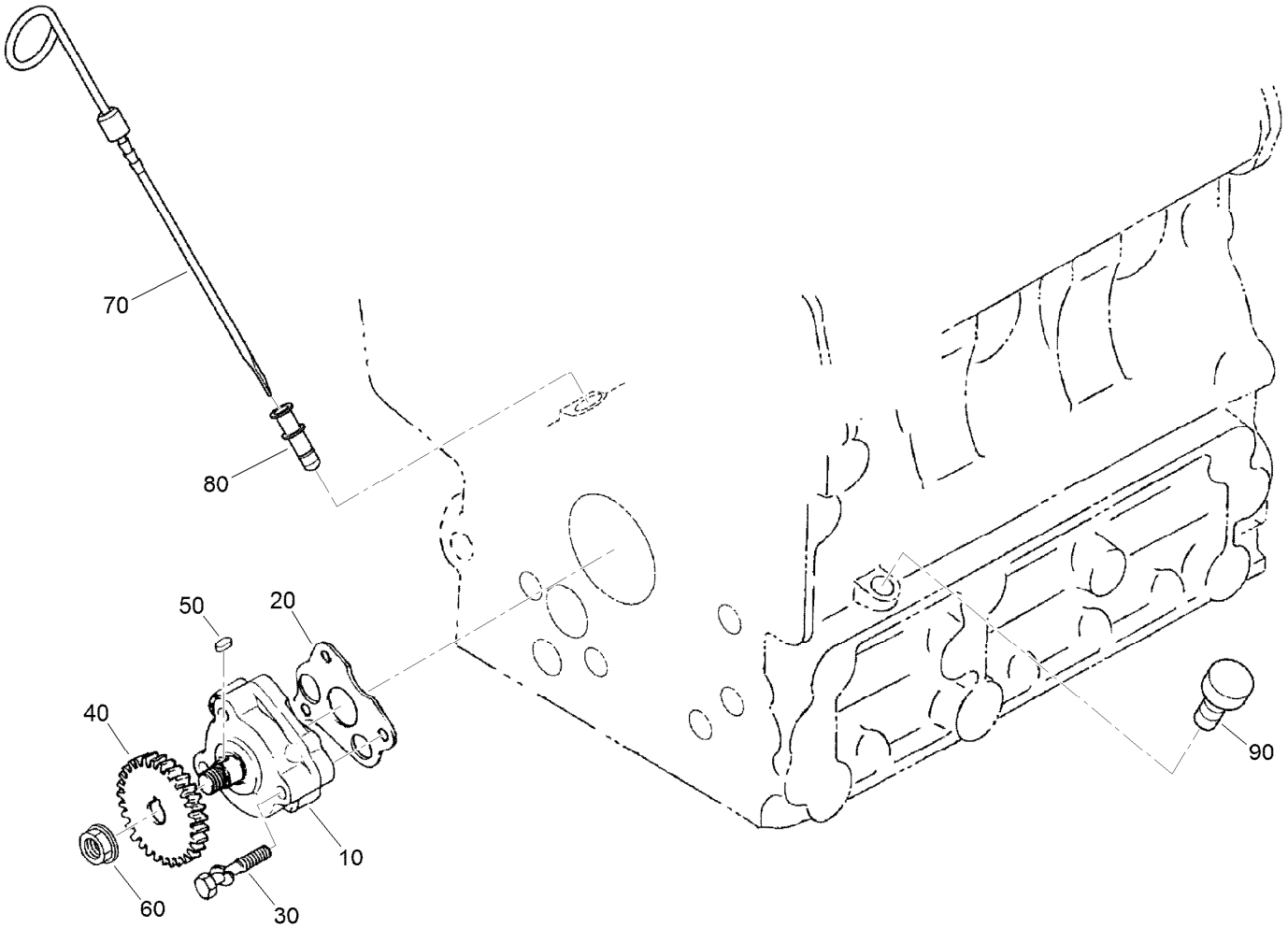


# Dipstick, Guide and Oil Pump Assembly

| *Ref.* | *Part Number* | *Qty.* | *Description* |
|---|---|---|---|
| 10 | 100-2002 | 1 | Oil Pump ASM |
| 20 | 100-2003 | 1 | Gasket-Pump, Oil |
| 30 | 100-1923 | 3 | Bolt |
| 40 | 100-1893 | 1 | Gear-Drive, Oil Pump |
| 50 | 98-7658 | 1 | Key-Feather |
| 60 | 100-1779 | 1 | Nut-Flange |
| 70 | 110-3719 | 1 | Gauge-Oil |
| 80 | 105-4580 | 1 | Guide-Gauge, Oil |
| 90 | 110-3720 | 1 | Plug-Gauge, Oil |

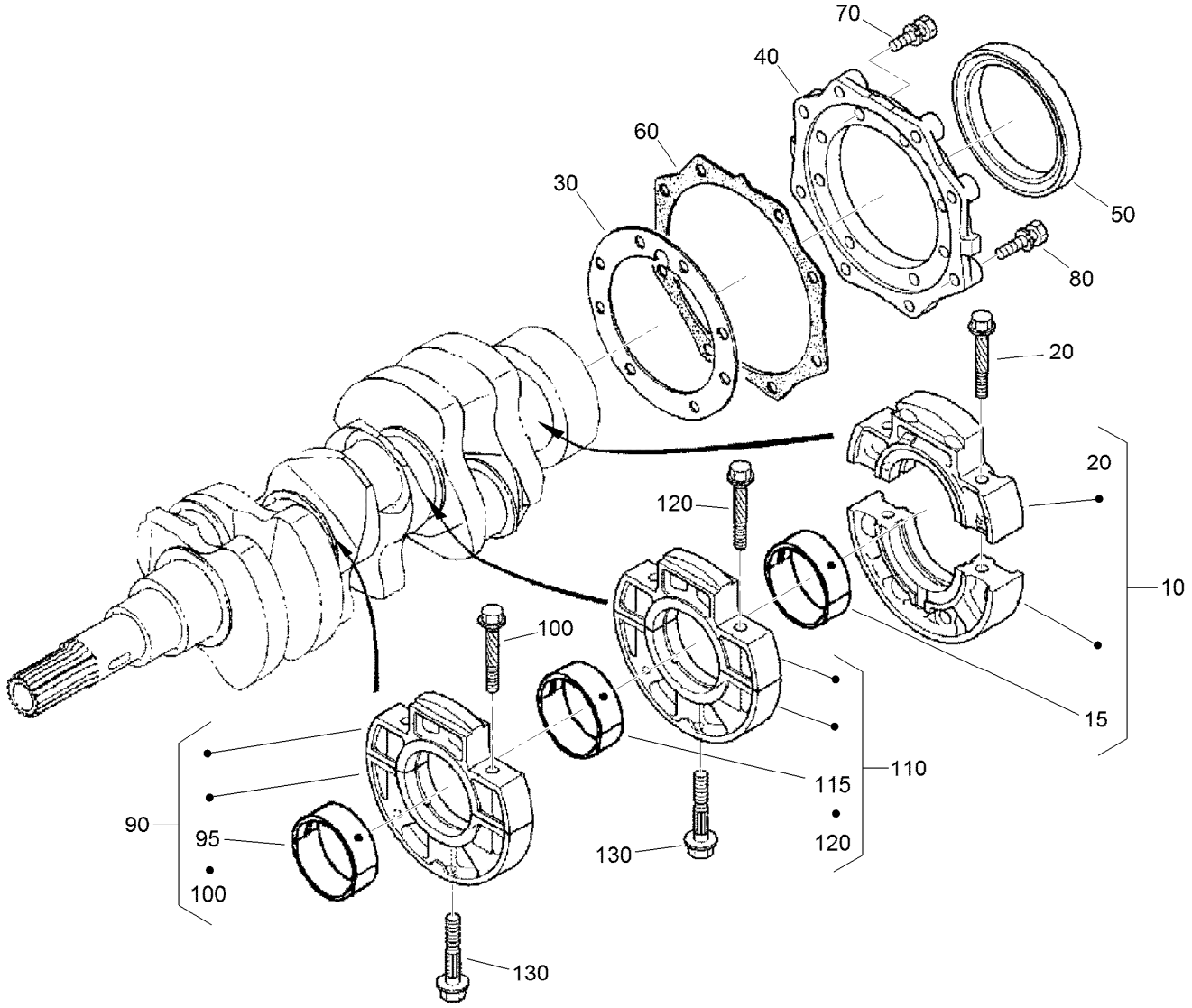


# Main Bearing Case Assembly

| Ref. | Part Number | Qty. | Description |
|---|---|---|---|
| 10 | 121-2426 | 1 | Bearing Case Wheel ASM |
| 15 | 110-3744 | 1 | Crankshaft Metal ASM (STD) |
| 15 | 110-3745 | 1 | Crankshaft Metal ASM (-0.20MM) |
| 15 | 110-3746 | 1 | Crankshaft Metal ASM (-0.40MM) |
| 20 | 110-3723 | 2 | Bolt-Case, Bearing |
| 30 | 100-1873 | 1 | Gasket-Case, Bearing |
| 40 | 112-8334 | 1 | Cover-Case, Bearing |
| 50 | 110-3724 | 1 | Seal-Oil |
| 60 | 100-1876 | 1 | Gasket-Cover, Case |
| 70 | 98-7568 | 8 | Bolt |
| 80 | 100-1750 | 8 | Bolt |
| 90 | 110-3725 | 1 | Main Bearing Case ASM |
| 95 | 110-3741 | 1 | Crankshaft Metal ASM (STD) |
| 95 | 125-9083 | 1 | Crankshaft Metal ASM (-0.20Mm) |
| 95 | 110-3743 | 1 | Crankshaft Metal ASM (-0.40Mm) |
| 100 | 110-3723 | 2 | Bolt-Case, Bearing |
| 110 | 110-3725 | 1 | Main Bearing Case ASM |
| 115 | 110-3741 | 1 | Crankshaft Metal ASM (STD) |
| 115 | 125-9083 | 1 | Crankshaft Metal ASM (-0.20Mm) |
| 115 | 110-3743 | 1 | Crankshaft Metal ASM (-0.40Mm) |
| 120 | 110-3723 | 2 | Bolt-Case, Bearing |
| 130 | 100-1874 | 2 | Bolt-Case, Bearing |

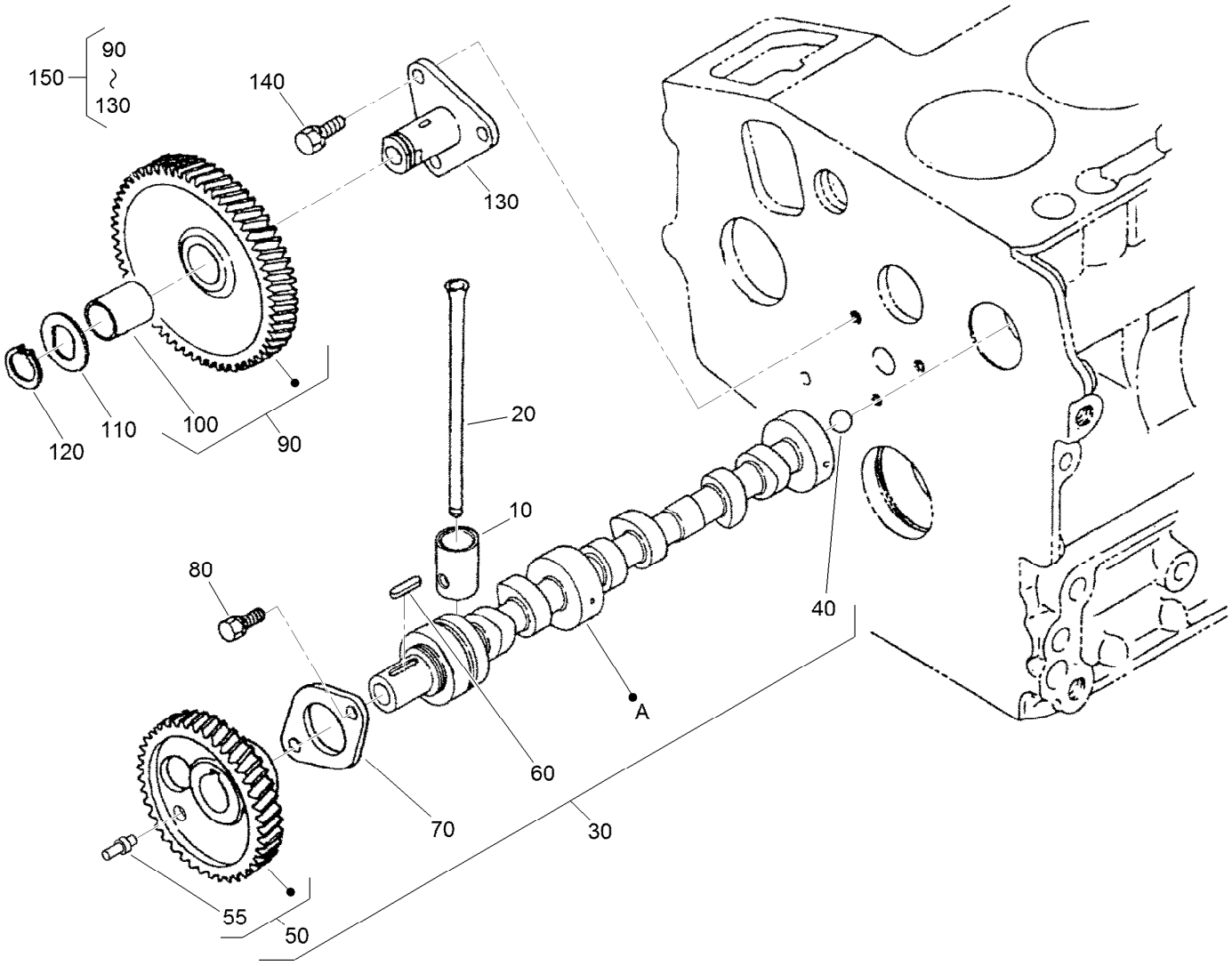


# Cam Shaft and Idle Gear Shaft Assembly

| Ref. | Part Number | Qty. | Description |
|---|---|---|---|
| 10 | 110-3727 | 6 | Tappet |
| 20 | 100-1989 | 6 | Rod-Push |
| 30 | 125-9131 | 1 | Camshaft ASM |
| 40 | 110-3729 | 1 | Ball |
| 50 | 125-9132 | 1 | Cam Gear ASM |
| 55 | 125-9133 | 2 | Pin-Gear, Cam |
| 60 | 98-9378 | 1 | Key-Feather |
| 70 | 100-1887 | 1 | Stopper-Camshaft |

| Ref. | Part Number | Qty. | Description |
|---|---|---|---|
| 80 | 98-9350 | 2 | Bolt |
| 90 | 121-2421 | 1 | Idle Gear ASM |
| 100 | 121-2422 | 1 | Bushing |
| 110 | 100-1970 | 1 | Collar-Gear, Idle |
| 120 | 100-1969 | 1 | Ring-Snap |
| 130 | 100-1967 | 1 | Shaft-Gear, Idle |
| 140 | 100-1774 | 3 | Bolt-Flange |
| 150 | 100-2240 | 1 | Idle Gear ASM |

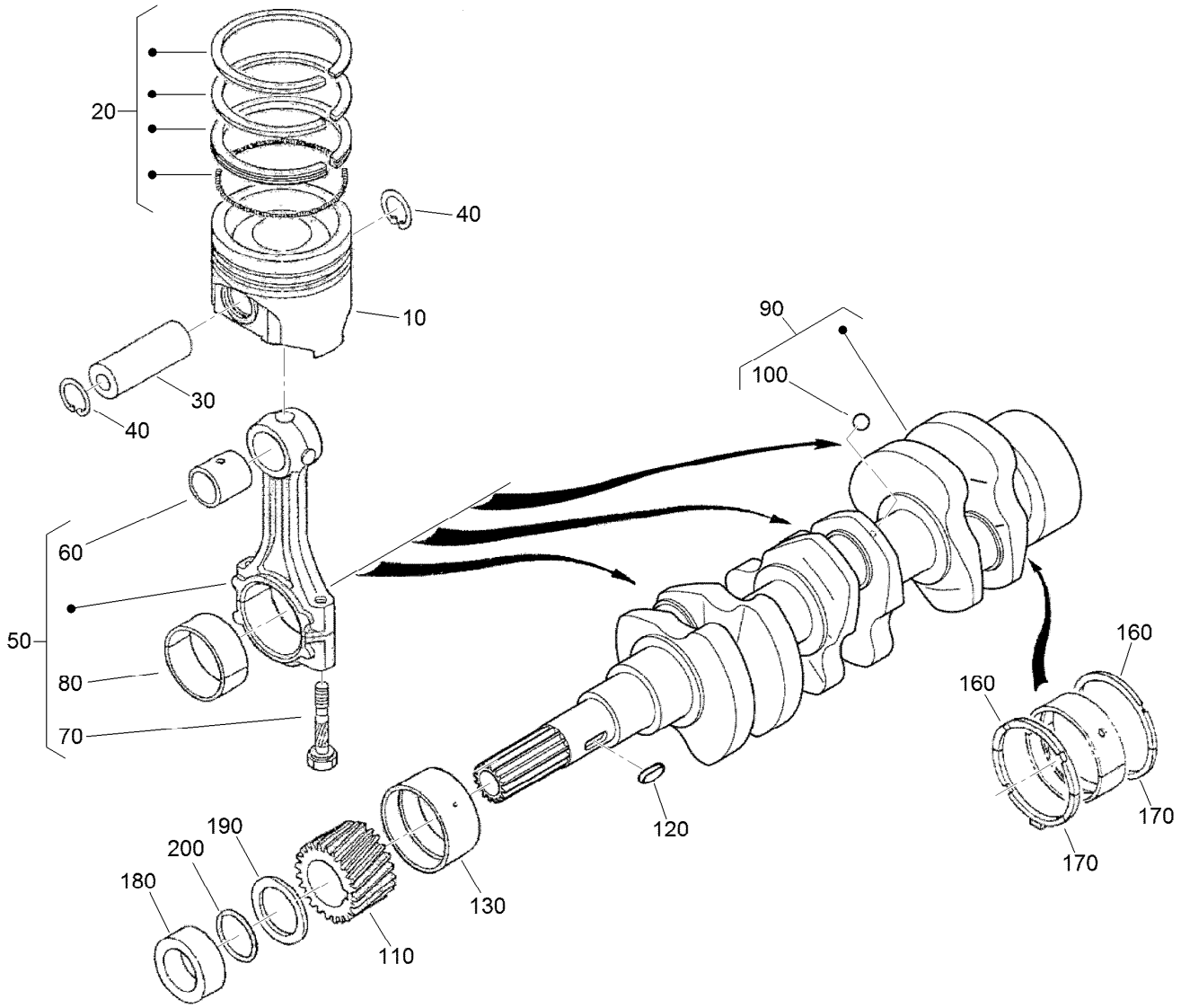


# Piston and Crankshaft Assembly

| Ref. | Part Number | Qty. | Description |
|---|---|---|---|
| 10 | 125-9115 | 3 | Piston (STD) |
| 10 | 125-9116 | 3 | Piston (+0.50Mm) |
| 20 | 125-9134 | 3 | Piston Ring ASM (STD) |
| 20 | 125-9135 | 3 | Piston Ring ASM (+0.50Mm) |
| 30 | 110-3734 | 3 | Pin-Piston |
| 40 | 100-1835 | 6 | Circlip-Internal |
| 50 | 125-9070 | 3 | Connecting Rod ASM |
| 60 | 110-3736 | 3 | Bushing-Pin, Piston |
| 70 | 100-1999 | 6 | Bolt-Rod, Connecting |
| 80 | 100-2000 | 3 | Metal-Crankpin (STD) |
| 80 | 100-1942 | 3 | Metal-Crankpin (-0.20Mm) |
| 80 | 100-1943 | 3 | Metal-Crankpin (-0.40Mm) |
| 90 | 117-0308 | 1 | Crankshaft |
| 100 | 100-1791 | 3 | Ball |
| 110 | 100-1891 | 1 | Gear-Crankshaft |

| Ref. | Part Number | Qty. | Description |
|---|---|---|---|
| 120 | 100-1752 | 1 | Key-Feather |
| 130 | 110-3738 | 1 | Metal-Crankshaft (STD) |
| 130 | 110-3739 | 1 | Metal-Crankshaft (-.0.20MM) |
| 130 | 110-3740 | 1 | Metal-Crankshaft (-0.40MM) |
| 160 | 100-1836 | 2 | Metal-Side (STD) |
| 160 | 100-1838 | 2 | Metal-Side (+0.20MM) |
| 160 | 100-1839 | 2 | Metal-Side (+0.40MM) |
| 170 | 117-0309 | 2 | Metal-Side (STD) |
| 170 | 100-1840 | 2 | Metal-Side (+0.2MM) |
| 170 | 100-1841 | 2 | Metal-Side (+0.4MM) |
| 180 | 100-1890 | 1 | Collar-Crankshaft |
| 190 | 100-1974 | 1 | Slinger-Oil |
| 200 | 100-2209 | 1 | O-Ring |

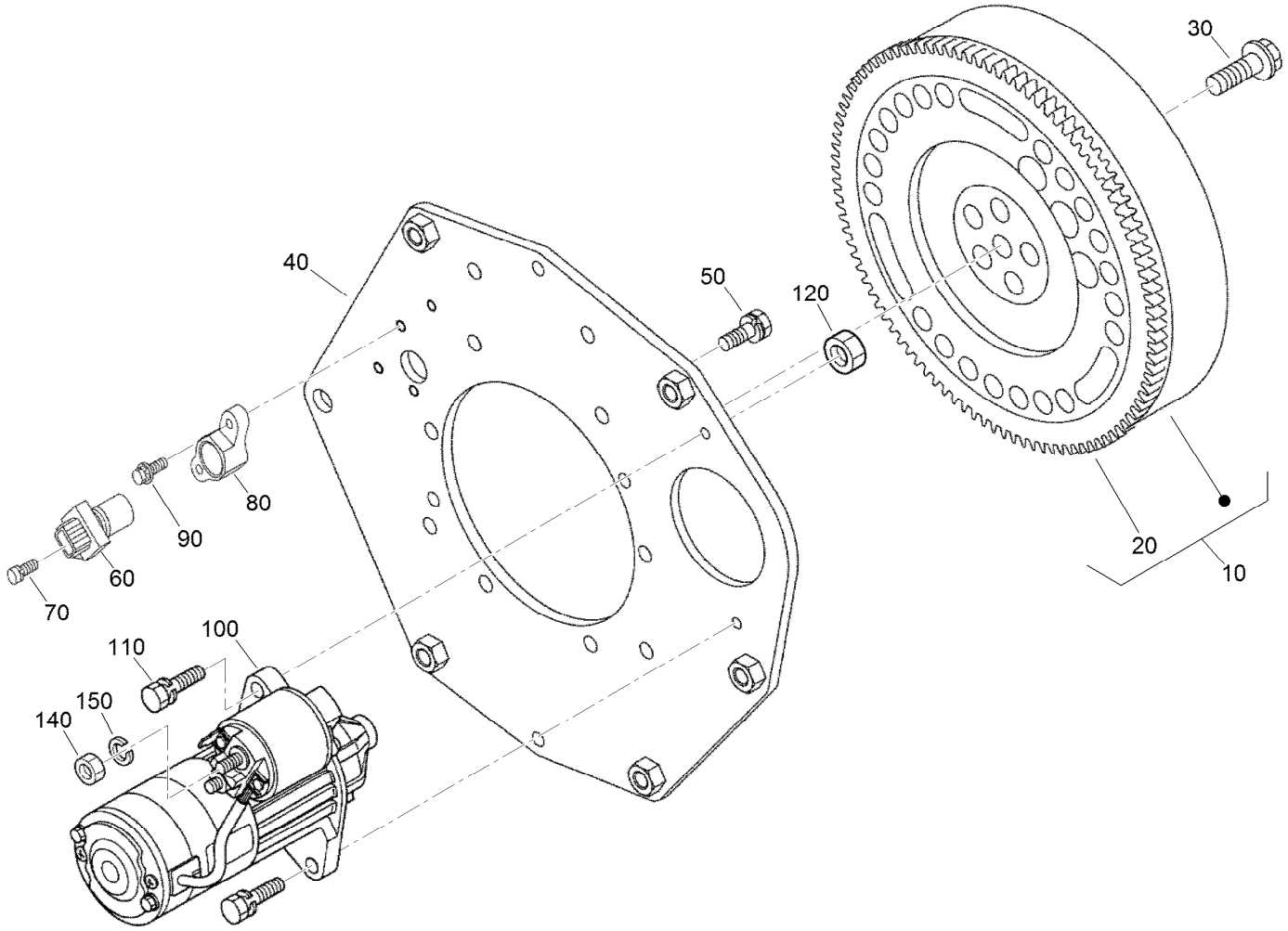


# Flywheel, Starter and Sensor Switch Assembly

| *Ref.* | *Part Number* | *Qty.* | *Description* |
|---|---|---|---|
| 10 | 125-9153 | 1 | Flywheel ASM |
| 20 | 105-3722 | 1 | Gear-Ring |
| 30 | 125-9051 | 5 | Bolt-Flywheel |
| 40 | 125-9152 | 1 | Plate-End, Rear |
| 50 | 110-3754 | 10 | Bolt |
| 60 | 125-9103 | 1 | Sensor Stick ASM |
| 70 | 125-9094 | 1 | Bolt-Flange |
| 80 | 125-9144 | 1 | Holder-Sensor |
| 90 | 108-2873 | 1 | Bolt-Flange |
| 100 | 110-3800 | 1 | Starter ASM |
| 110 | 98-7697 | 2 | Bolt |
| 120 | 98-7534 | 2 | Nut |
| 140 | 98-7534 | 1 | Nut |
| 150 | 105-2893 | 1 | Washer-Spring |

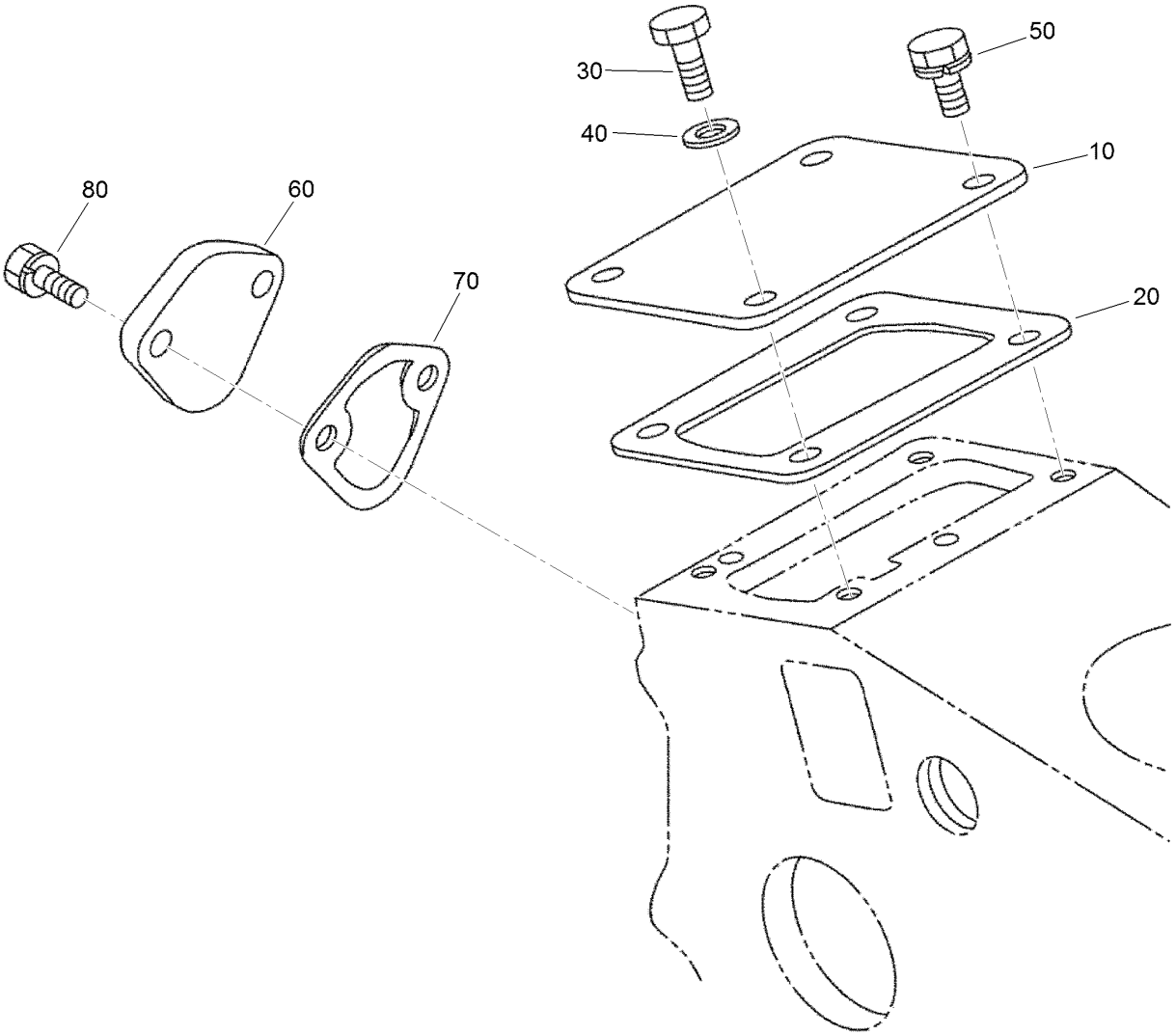


# Injection and Fuel Pump Covers Assembly

| *Ref.* | *Part Number* | *Qty.* | *Description* |
|---|---|---|---|
| 10 | 125-9098 | 1 | Cover |
| 20 | 125-9105 | 1 | Gasket |
| 30 | 99-8348 | 1 | Bolt |
| 40 | 98-7654 | 1 | Gasket |
| 50 | 98-9350 | 3 | Bolt |
| 60 | 99-3514 | 1 | Cover |
| 70 | 98-9636 | 1 | Gasket-Pump, Fuel |
| 80 | 98-7692 | 2 | Bolt |

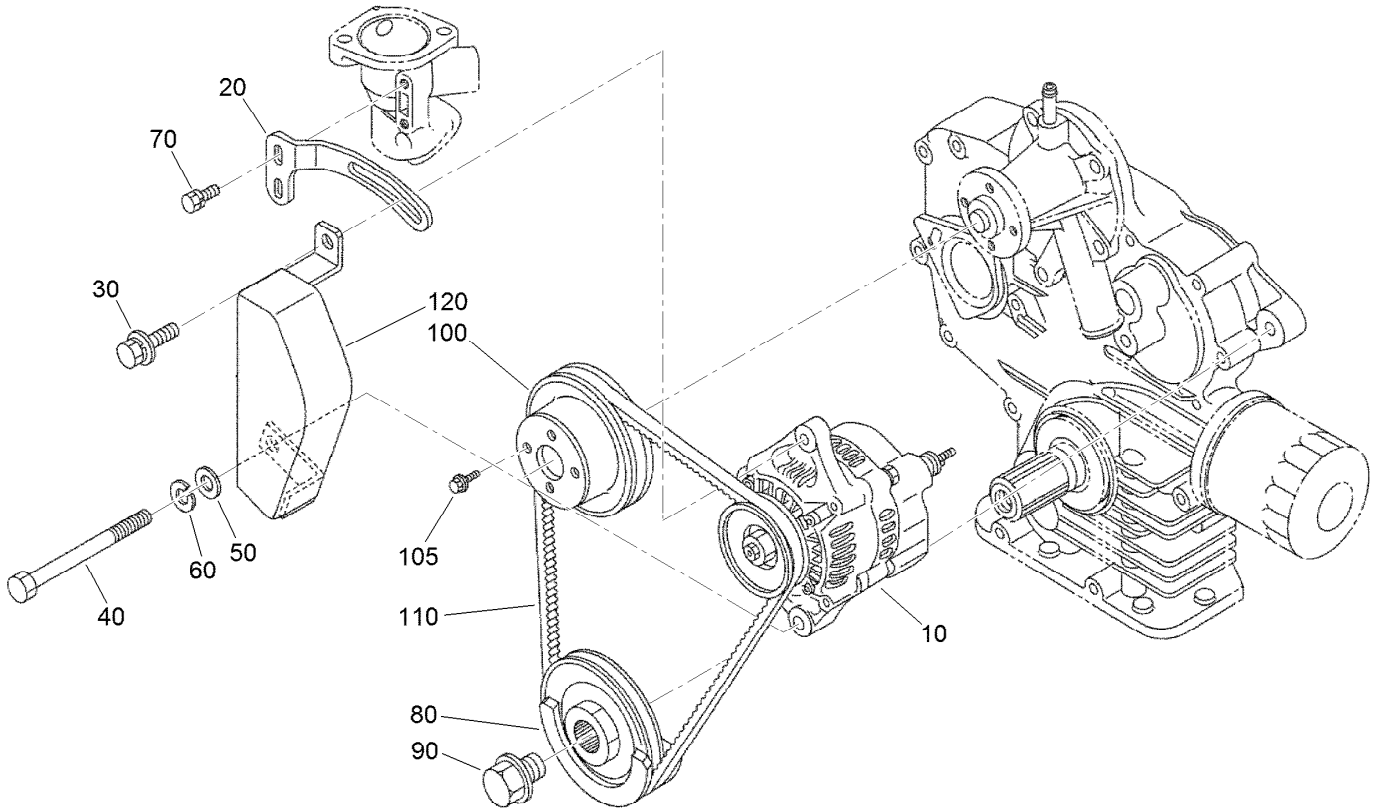


# Alternator and Pulley Assembly

| *Ref.* | *Part Number* | *Qty.* | *Description* |
|---|---|---|---|
| 10 | 117-5541 | 1 | 60 Amp Alternator ASM |
| 20 | 117-0314 | 1 | Stay-Alternator |
| 30 | 121-3800 | 1 | Bolt-Sems |
| 40 | 125-9091 | 1 | Bolt-Hex |
| 50 | 120-5832 | 1 | Washer-Plain |
| 60 | 105-2893 | 1 | Washer-Spring |
| 70 | 98-7692 | 2 | Bolt |
| 80 | 100-1921 | 1 | Pulley-Fan |
| 90 | 100-1978 | 1 | Bolt |
| 100 | 125-9154 | 1 | Pulley-Drive, Fan |
| 105 | 99-8363 | 4 | Bolt-Flange |
| 110 | 110-3796 | 1 | Belt-V |
| 120 | 117-0315 | 1 | Cover-Alternator |

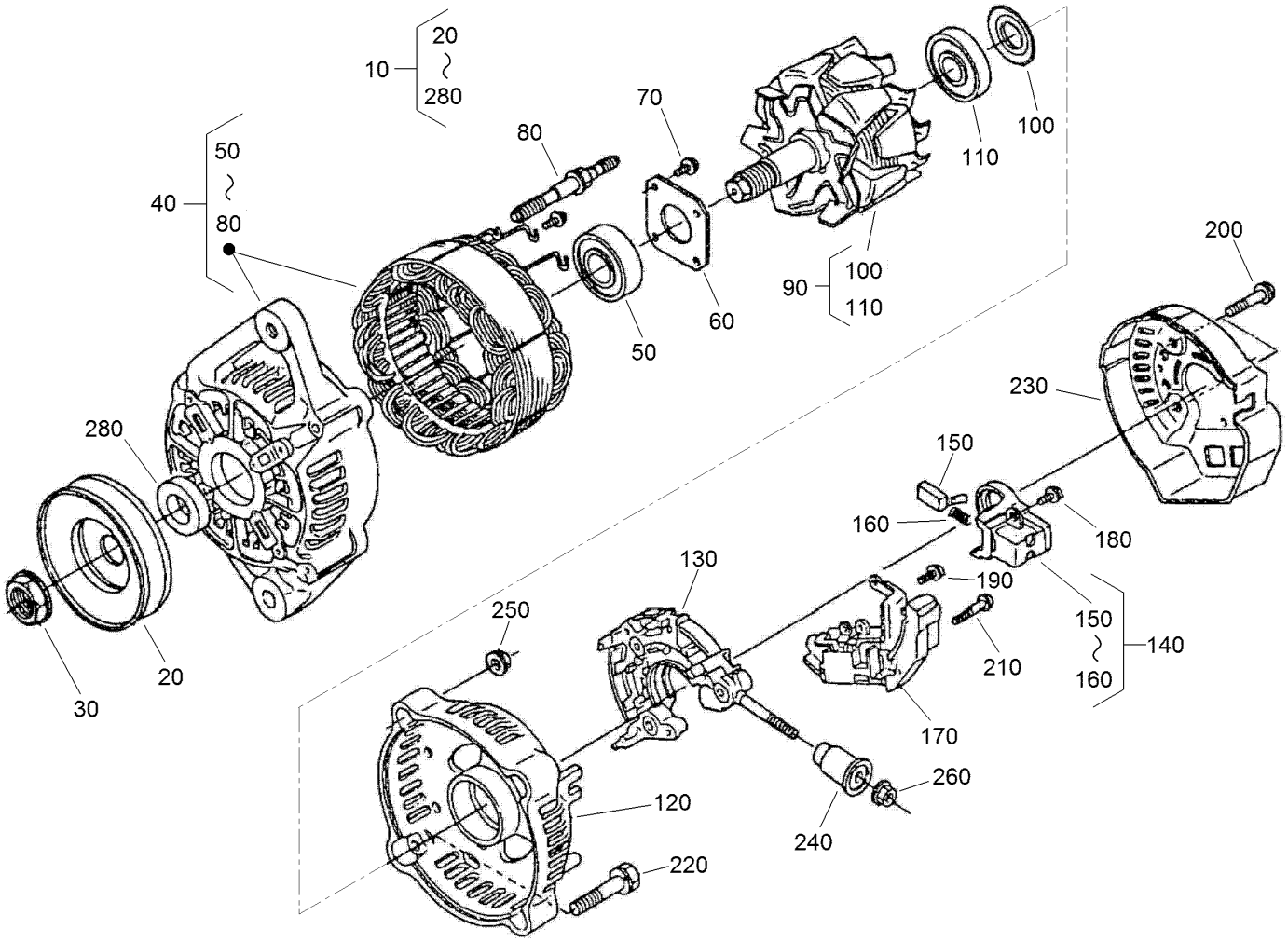


# Alternator Components Assembly

| Ref. | Part Number | Qty. | Description |
|---|---|---|---|
| 10 | 117-5541 | 1 | 60 Amp Alternator ASM |
| 20 | 98-9453 | 1 | Pulley-Dynamo |
| 30 | 98-7708 | 1 | Nut |
| 40 | 117-0316 | 1 | Drive End Frame ASM |
| 50 | 133-2811 | 1 | Bearing |
| 60 | 98-7715 | 1 | Plate-Retainer |
| 70 | 98-7716 | 4 | Screw-Head, Round |
| 80 | 98-7717 | 2 | Bolt-Through |
| 90 | 117-0317 | 1 | Rotor ASM |
| 100 | 98-7711 | 1 | Cover-Bearing |
| 110 | 107-0138 | 1 | Bearing-Ball |
| 120 | 133-2813 | 1 | Frame-End |
| 130 | 117-0322 | 1 | Holder |
| 140 | 107-0141 | 1 | Brush Holder ASM |

| Ref. | Part Number | Qty. | Description |
|---|---|---|---|
| 150 | 98-7724 | 2 | Brush |
| 160 | 98-7725 | 2 | Spring-Brush |
| 170 | 117-0319 | 1 | Regulator ASM |
| 180 | 98-7727 | 6 | Screw-Head, Round |
| 190 | 98-7728 | 1 | Screw-Head, Round |
| 200 | 98-7729 | 3 | Bolt |
| 210 | 98-7726 | 2 | Screw-Head, Round |
| 220 | 98-7731 | 2 | Bolt |
| 230 | 117-0320 | 1 | Cover-End |
| 240 | 117-0321 | 1 | Insulation-Brush |
| 250 | 98-7730 | 2 | Nut |
| 260 | 98-7732 | 1 | Nut |
| 280 | 98-7709 | 1 | Collar |

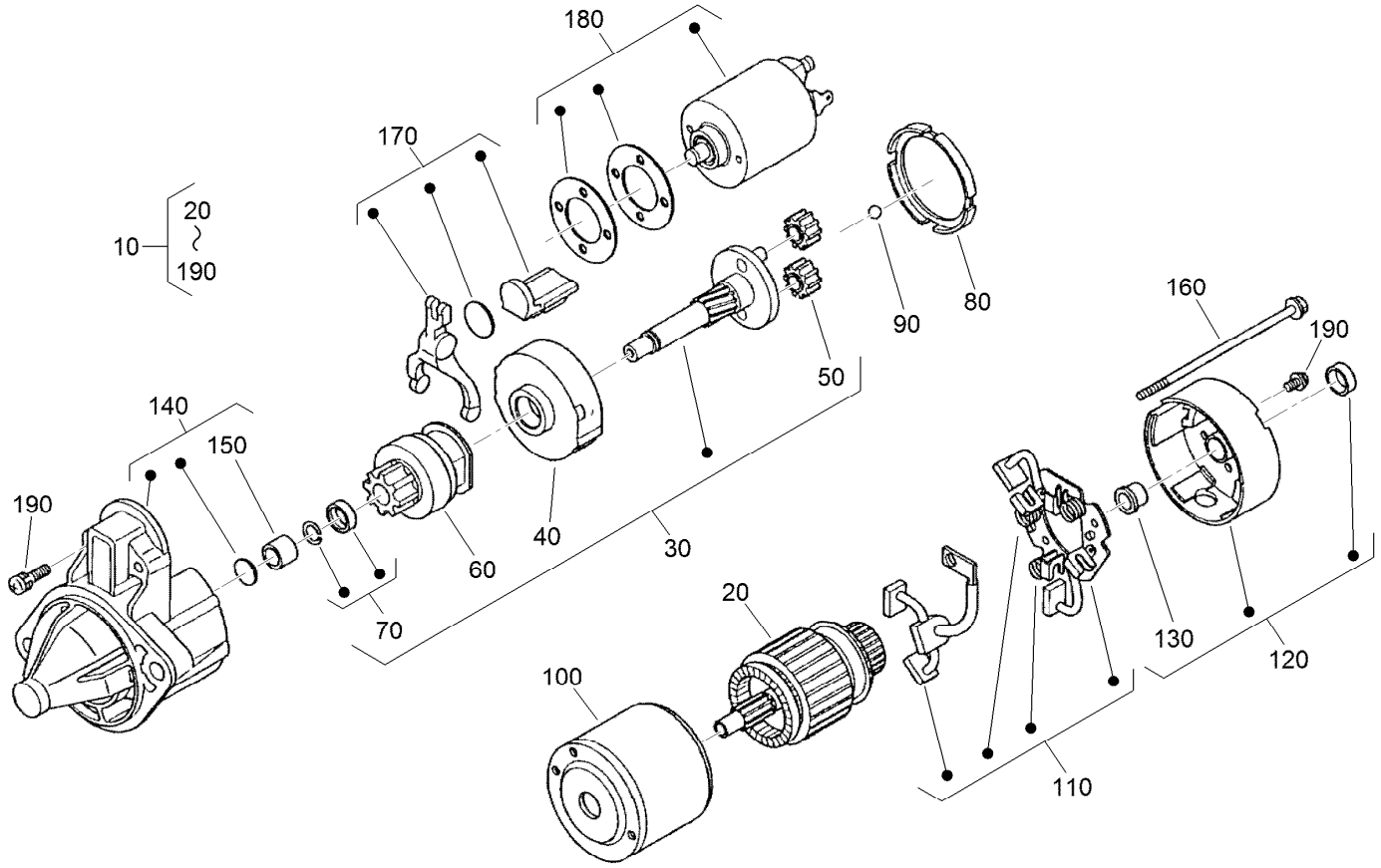


# Starter Components Assembly

| Ref. | Part Number | Qty. | Description |
|---|---|---|---|
| 10 | 110-3800 | 1 | Starter ASM |
| 20 | 110-3801 | 1 | Armature |
| 30 | 110-3802 | 1 | Shaft ASM |
| 40 | 120-3142 | 1 | Gear-Internal |
| 50 | 110-3804 | 3 | Gear-Planetary |
| 60 | 110-3805 | 1 | Clutch-Running, Over |
| 70 | 110-3806 | 1 | Stopper |
| 80 | 120-3143 | 1 | Gasket |
| 90 | 110-3808 | 1 | Ball |
| 100 | 110-3809 | 1 | Yoke |

| Ref. | Part Number | Qty. | Description |
|---|---|---|---|
| 110 | 110-3810 | 1 | Brush Holder ASM |
| 120 | 110-3811 | 1 | Rear Bracket ASM |
| 130 | 110-3812 | 1 | Bushing |
| 140 | 110-3813 | 1 | Front Bracket ASM |
| 150 | 110-3814 | 1 | Bushing |
| 160 | 110-3815 | 2 | Bolt |
| 170 | 110-3816 | 1 | Fork Lever ASM |
| 180 | 125-9099 | 1 | Switch-Magnetic |
| 190 | 110-3818 | 1 | Screws (Set Of 4) |

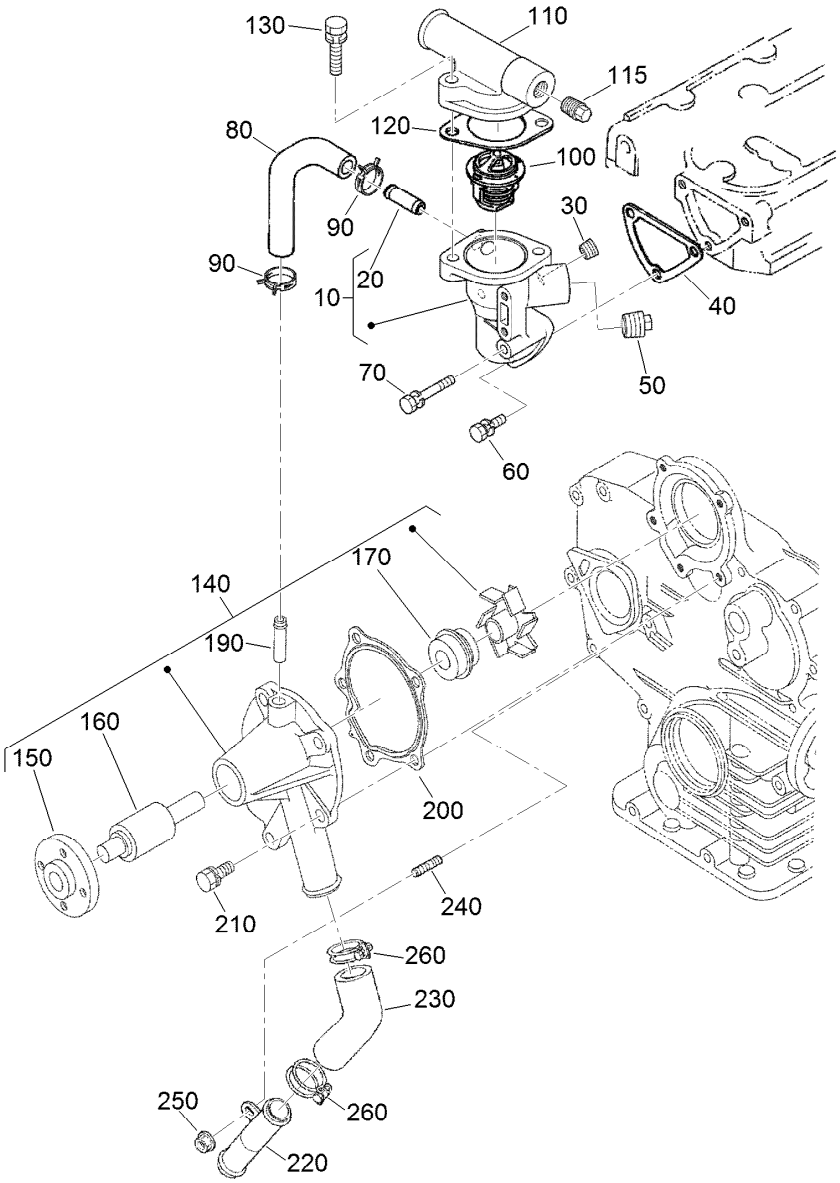


# Thermostat and Water Pump Assembly

| Ref. | Part Number | Qty. | Description |
|---|---|---|---|
| 10 | 110-3819 | 1 | Water Flange ASM |
| 20 | 98-9580 | 1 | Pipe-Return, Water |
| 30 | 98-9444 | 1 | Plug |
| 40 | 110-3820 | 1 | Gasket-Flange, Water |
| 50 | 110-3821 | 1 | Plug |
| 60 | 98-7692 | 2 | Bolt |
| 70 | 105-3797 | 1 | Bolt |
| 80 | 110-3822 | 1 | Pipe-Return, Water |
| 90 | 121-3835 | 2 | Clamp-Hose |
| 100 | 98-7778 | 1 | Thermostat ASM |
| 110 | 120-7575 | 1 | Cover-Thermostat |
| 115 | 125-9079 | 1 | Plug |
| 120 | 105-3748 | 1 | Gasket-Thermostat |

| Ref. | Part Number | Qty. | Description |
|---|---|---|---|
| 130 | 98-7777 | 2 | Bolt |
| 140 | 110-3824 | 1 | Water Pump ASM |
| 150 | 100-1933 | 1 | Flange-Pump, Water |
| 160 | 100-1934 | 1 | Bearing-Ball |
| 170 | 99-3518 | 1 | Water Pump Seal ASM |
| 190 | 100-1932 | 1 | Pipe-Return, Water |
| 200 | 117-0330 | 1 | Gasket-Pump, Water |
| 210 | 100-1750 | 4 | Bolt |
| 220 | 100-1918 | 1 | Pipe-Water |
| 230 | 110-3827 | 1 | Pipe-Water |
| 240 | 100-1924 | 1 | Stud |
| 250 | 100-2203 | 1 | Nut-Flange |
| 260 | 110-3828 | 2 | Band-Pipe |

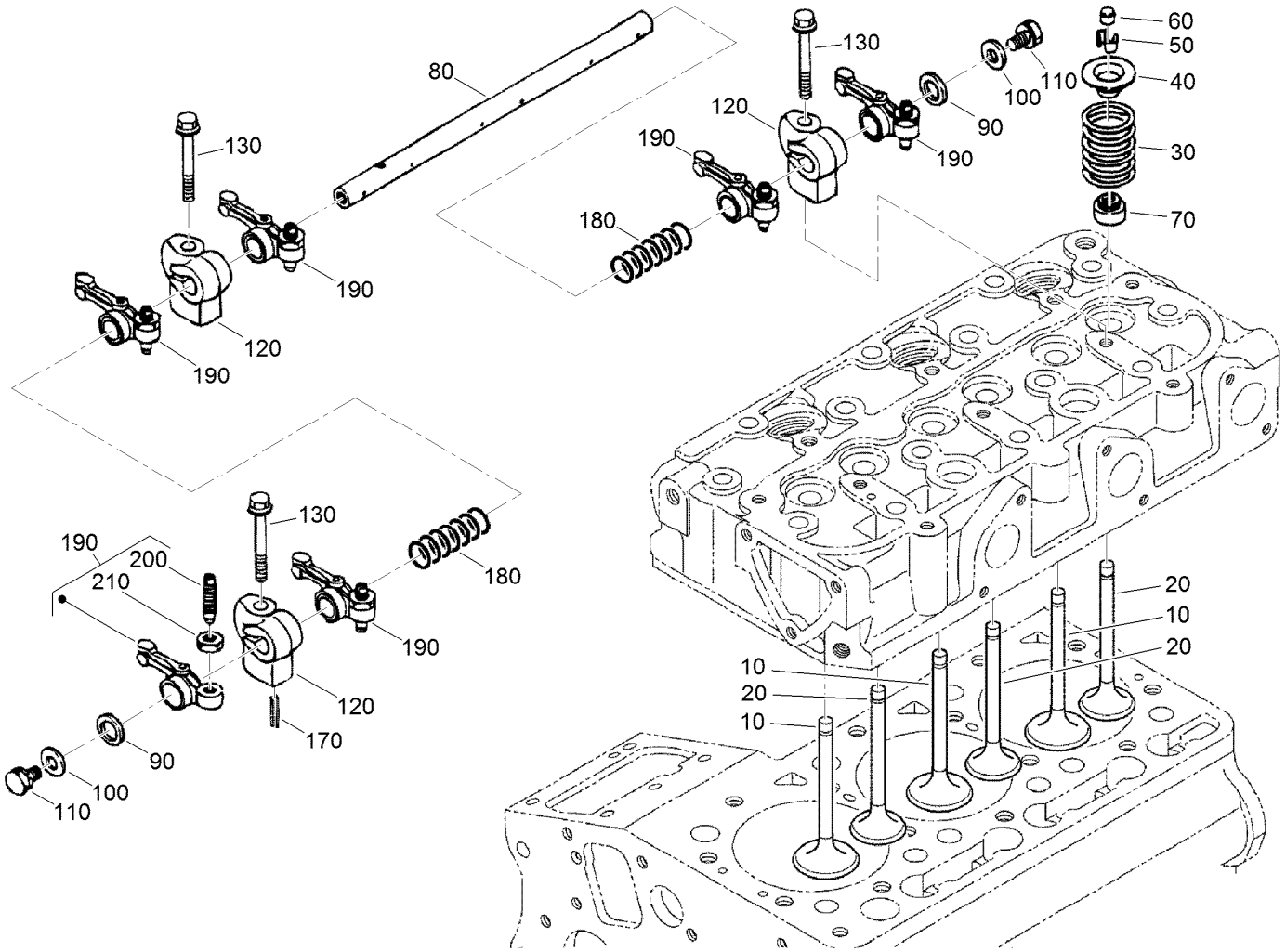


# Valve and Rocker Arm Assembly

| Ref. | Part Number | Qty. | Description |
|---|---|---|---|
| 10 | 125-9106 | 3 | Valve-Inlet |
| 20 | 125-9114 | 3 | Valve-Exhaust |
| 30 | 100-1823 | 6 | Spring-Valve |
| 40 | 100-1825 | 6 | Retainer-Spring, Valve |
| 50 | 120-3136 | 6 | Collet-Spring, Valve |
| 60 | 100-2155 | 6 | Cap-Valve |
| 70 | 125-9128 | 6 | Seal-Stem, Valve |
| 80 | 110-3831 | 1 | Shaft-Arm, Rocker |
| 90 | 100-2044 | 2 | Washer |

| Ref. | Part Number | Qty. | Description |
|---|---|---|---|
| 100 | 100-1927 | 2 | Washer-Plain |
| 110 | 100-1762 | 2 | Bolt |
| 120 | 110-3833 | 3 | Bracket-Arm, Rocker |
| 130 | 110-3834 | 3 | Bolt-Flange |
| 170 | 98-7602 | 1 | Pin-Spring |
| 180 | 110-3835 | 2 | Spring |
| 190 | 100-1884 | 6 | Rocker Arm ASM |
| 200 | 100-1885 | 6 | Screw-Adjusting |
| 210 | 100-1827 | 6 | Nut |

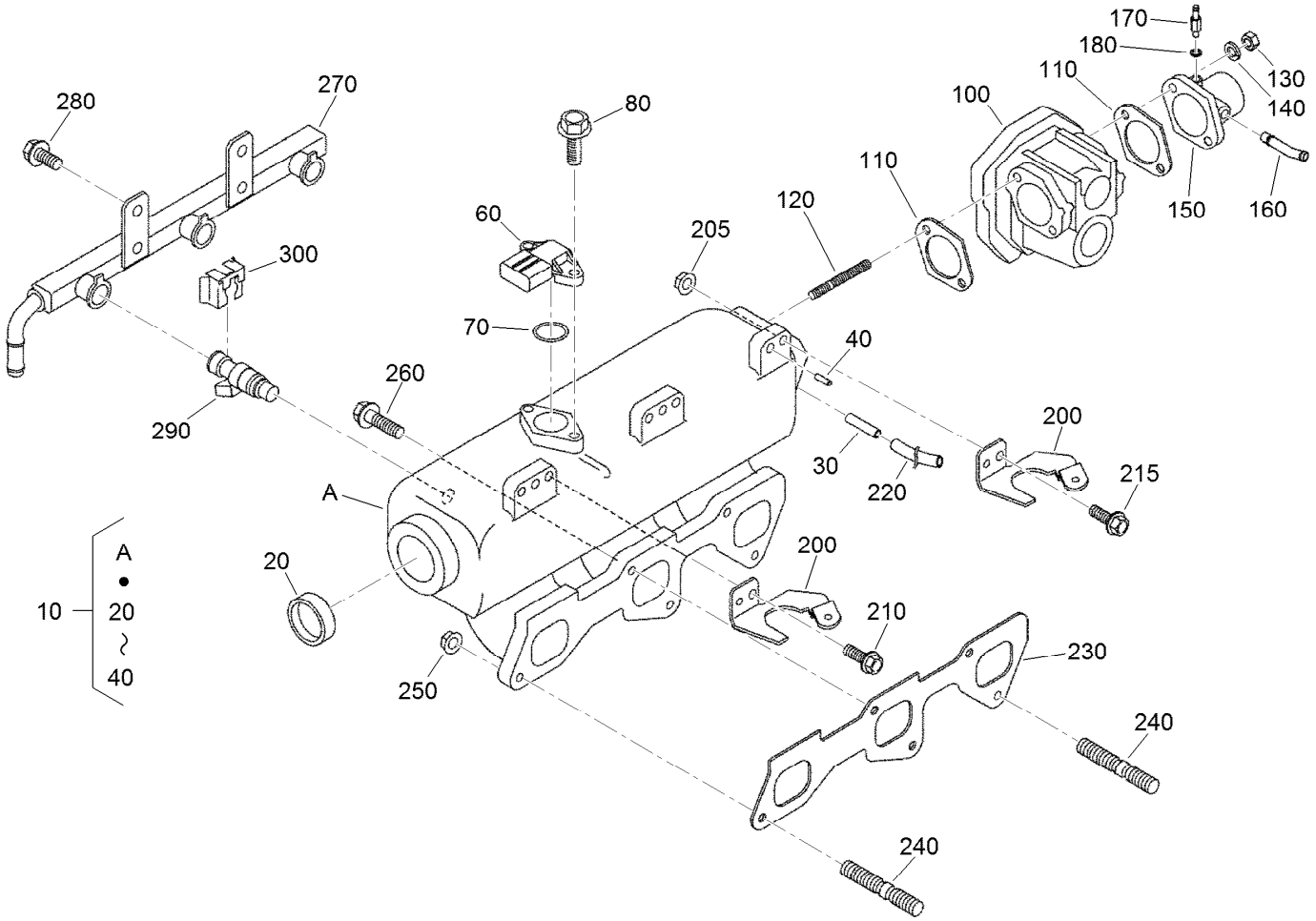


# Inlet Manifold Assembly

| Ref. | Part Number | Qty. | Description |
|---|---|---|---|
| 10 | 125-9122 | 1 | Intake Manifold ASM |
| 20 | 98-7539 | 1 | Cap-Sealing |
| 30 | 125-9158 | 1 | Pin-Pipe |
| 40 | 98-9375 | 3 | Pin-Straight |
| 60 | 125-9110 | 1 | Sensor (Tmap) |
| 70 | 125-9112 | 1 | O Ring |
| 80 | 125-9111 | 2 | Bolt-Flange |
| 100 | 125-9136 | 1 | Throttle Body ASM |
| 110 | 125-9104 | 2 | Gasket-Cleaner, Air |
| 120 | 125-9093 | 2 | Stud |
| 130 | 98-7534 | 2 | Nut |
| 140 | 105-2893 | 2 | Washer-Spring |
| 150 | 125-9121 | 1 | Flange-Cleaner, Air |
| 160 | 110-3837 | 1 | Pipe-Breather |
| 170 | 98-9431 | 1 | Screw-Bleeder, Air |

| Ref. | Part Number | Qty. | Description |
|---|---|---|---|
| 180 | 98-7654 | 1 | Gasket |
| 200 | 125-9146 | 3 | Stay-Coil, Ignition |
| 205 | 100-2203 | 1 | Nut-Flange |
| 210 | 99-8363 | 2 | Bolt-Flange |
| 215 | 105-3789 | 1 | Bolt |
| 220 | 125-9097 | 1 | Tube-Fuel |
| 230 | 125-9123 | 1 | Gasket-Manifold, Intake |
| 240 | 125-9092 | 2 | Stud |
| 250 | 100-2203 | 2 | Nut-Flange |
| 260 | 98-9352 | 3 | Bolt |
| 270 | 125-9137 | 1 | Rail-Ignition, Fuel |
| 280 | 98-7692 | 2 | Bolt |
| 290 | 125-9107 | 3 | Injector |
| 300 | 125-9138 | 3 | Stopper-Injector |

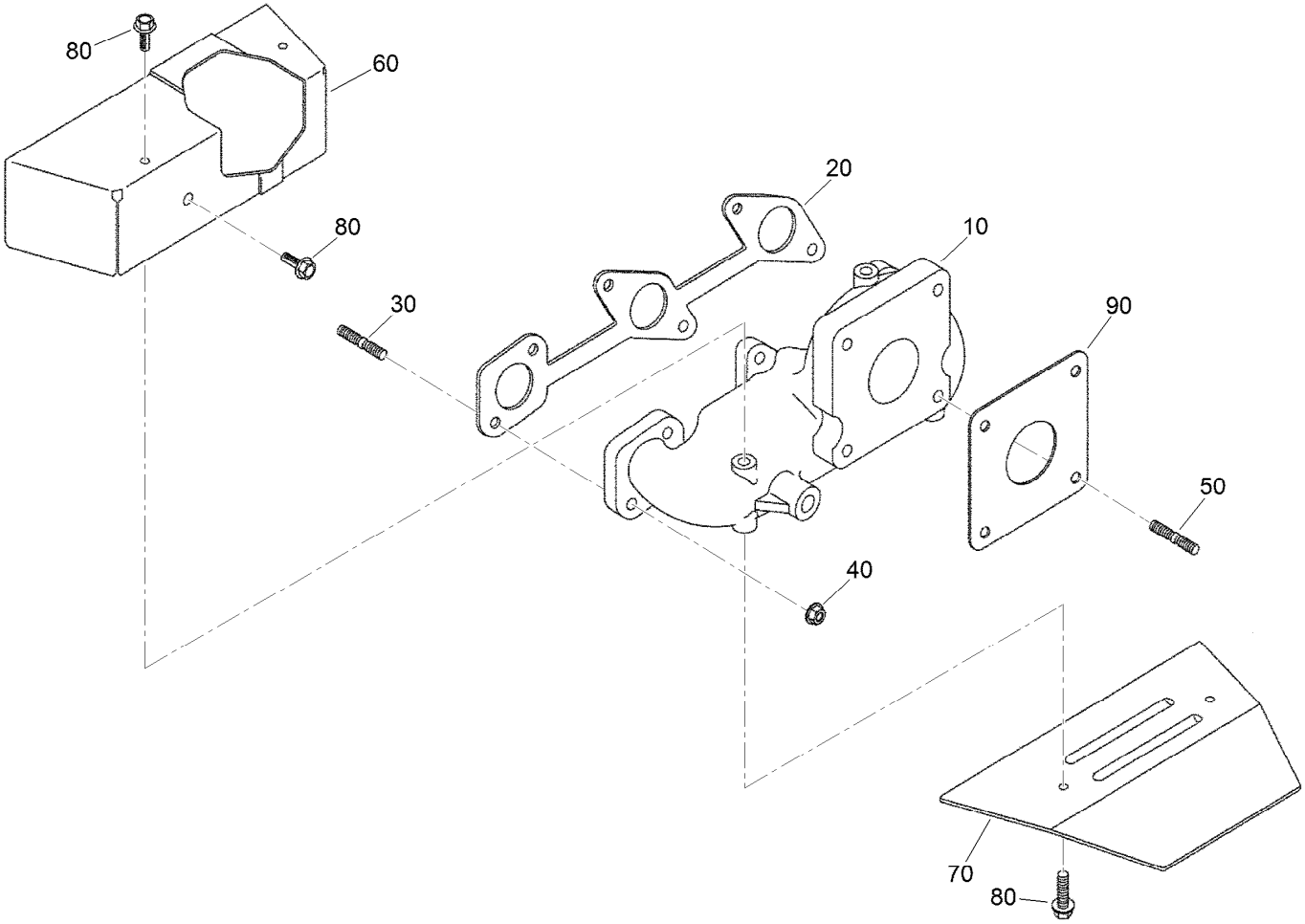


# Exhaust Manifold Assembly

| *Ref.* | *Part Number* | *Qty.* | *Description* |
|---|---|---|---|
| 10 | 125-9125 | 1 | Manifold-Exhaust |
| 20 | 110-3840 | 1 | Gasket-Manifold, Exhaust |
| 30 | 125-9149 | 6 | Bolt-Stud |
| 40 | 100-1778 | 6 | Nut |
| 50 | 125-9100 | 4 | Stud |
| 60 | 125-9126 | 1 | Cover-Upper |
| 70 | 125-9127 | 1 | Cover-Lower |
| 80 | 125-9090 | 5 | Bolt |
| 90 | 125-9108 | 1 | Gasket-Muffler |

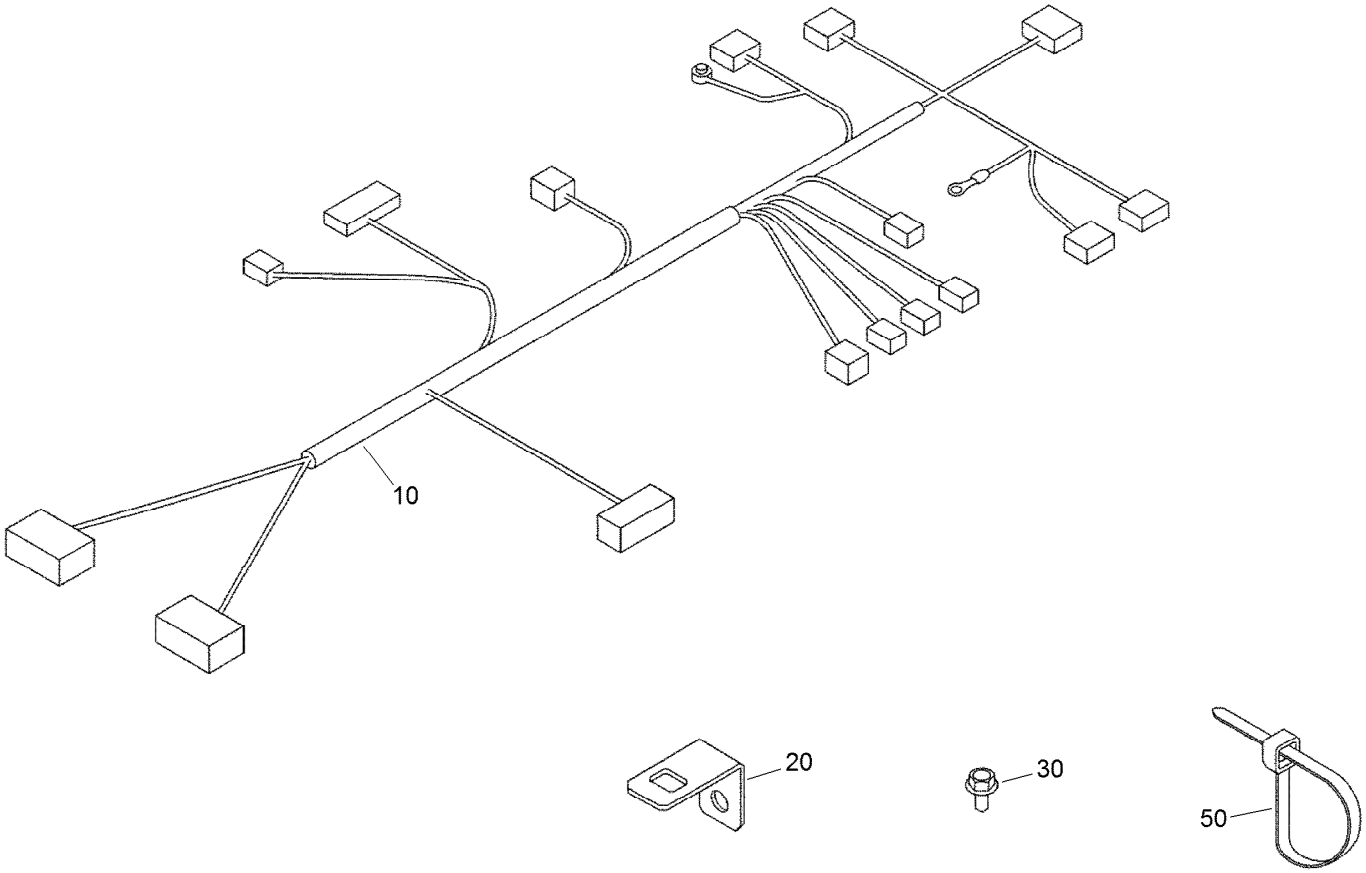


# Wire Harness Assembly

| *Ref.* | *Part Number* | *Qty.* | *Description* |
|---|---|---|---|
| 10 | 125-9143 | 1 | Harness-Wire, E C U |
| 20 | 125-9157 | 1 | Stay-Boom, Harness |
| 30 | 115-8504 | 1 | Bolt-Flange |
| 50 | 125-9101 | 2 | Band-Cord |

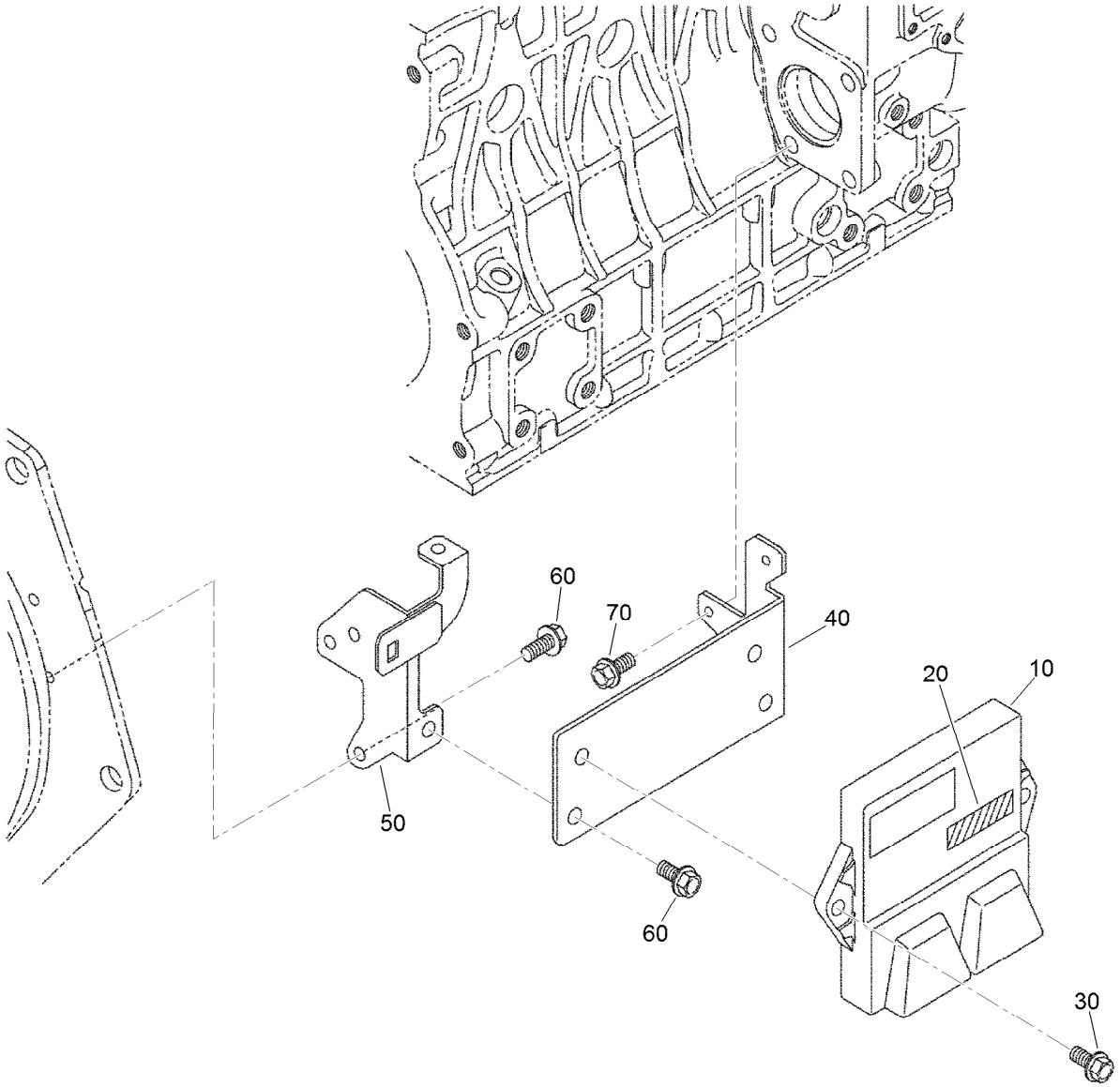


# Electronic Control Unit Assembly

| *Ref.* | *Part Number* | *Qty.* | *Description* |
|---|---|---|---|
| 10 | 125-9156 | 1 | E C U ASM |
| 20 | 125-9147 | 1 | Label |
| 30 | 108-2873 | 2 | Bolt-Flange |
| 40 | 125-9140 | 1 | Stay-E C U |
| 50 | 125-9141 | 1 | Stay-E C U |
| 60 | 100-1774 | 3 | Bolt-Flange |
| 70 | 115-8504 | 2 | Bolt-Flange |

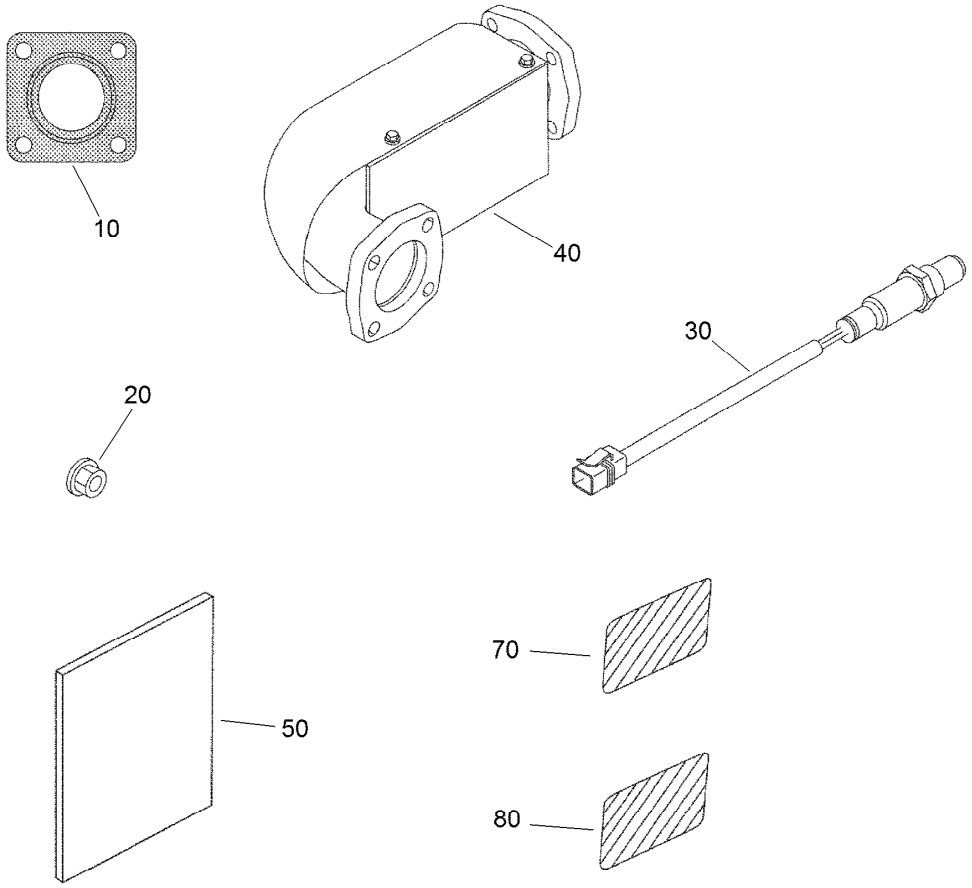


# Operator Manual and Miscellaneous Engine Parts

| *Ref.* | *Part Number* | *Qty.* | *Description* |
|---|---|---|---|
| 10 | 125-9108 | 1 | Gasket-Muffler |
| 20 | 125-9095 | 4 | Nut |
| 30 | 121-3511 | 1 | Sensor-O2 F/W |
| 40 | 125-9118 | 1 | Converter-Catalytic (F/W Engine) |
| 50 | 125-9148 | 1 | Operator Manual |
| 70 | 110-0806 | 1 | Decal-Caution |
| 80 | 110-3843 | 1 | Label-Instruction |

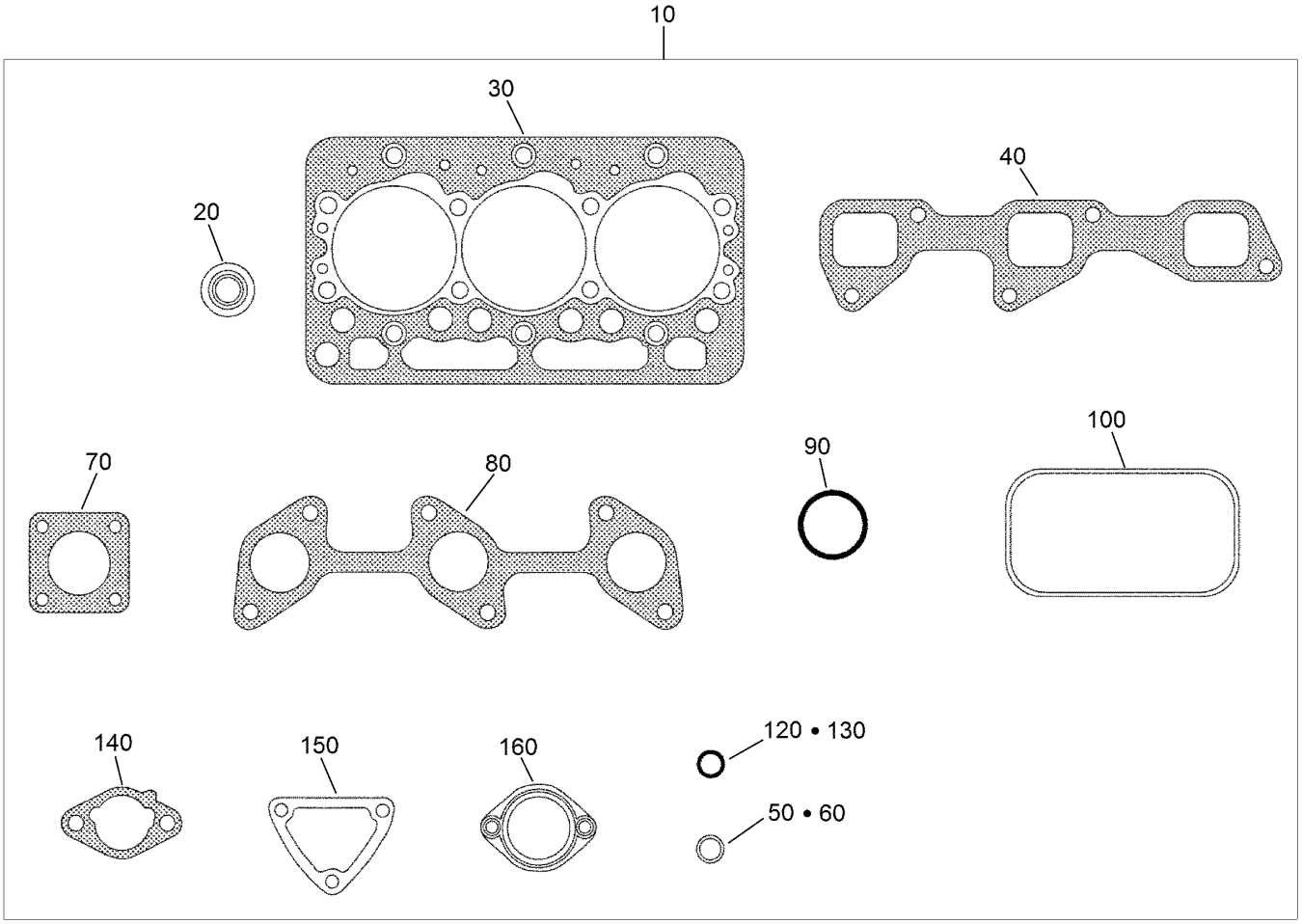


# Upper Engine Gasket Kit

| *Ref.* | *Part Number* | *Qty.* | *Description* |
|---|---|---|---|
| 10 | 125-9150 | 1 | Upper Gasket Kit |
| 20 | 125-9128 | 6 | Seal-Stem, Valve |
| 30 | 125-9113 | 1 | Gasket-Head |
| 40 | 125-9123 | 1 | Gasket-Manifold, Intake |
| 50 | 125-9112 | 1 | O Ring |
| 60 | 99-3446 | 1 | O-Ring |
| 70 | 125-9108 | 1 | Gasket-Muffler |
| 80 | 110-3840 | 1 | Gasket-Manifold, Exhaust |
| 90 | 110-3846 | 1 | O Ring-Breather |
| 100 | 125-9130 | 1 | Gasket-Cover, Head |
| 120 | 125-9096 | 1 | Gasket |
| 130 | 98-7654 | 1 | Gasket |
| 140 | 125-9104 | 2 | Gasket-Cleaner, Air |
| 150 | 110-3820 | 1 | Gasket-Flange, Water |
| 160 | 105-3748 | 1 | Gasket-Thermostat |

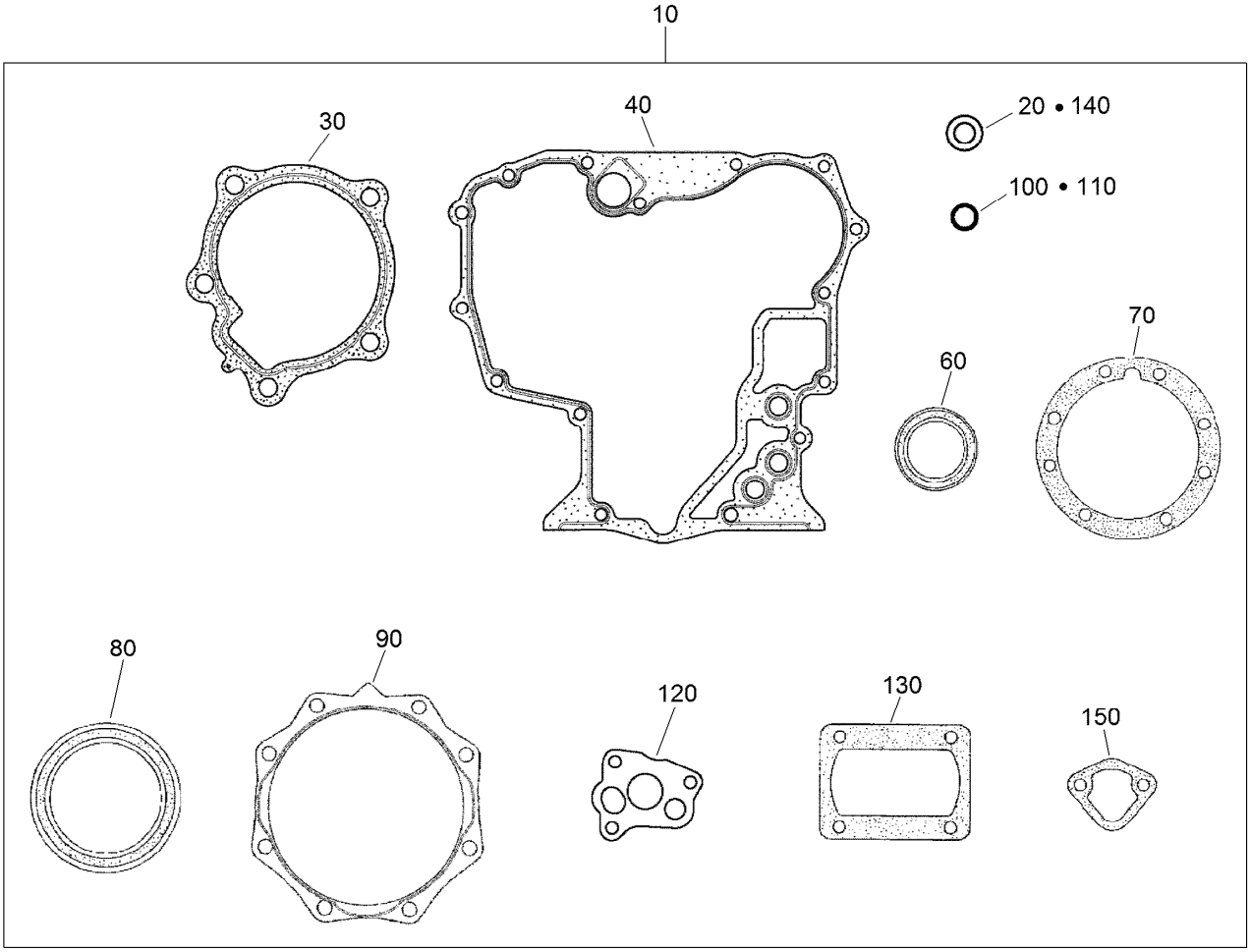


# Lower Engine Gasket Kit

| Ref. | Part Number | Qty. | Description |
|---|---|---|---|
| 10 | 125-9155 | 1 | Lower Gasket Kit |
| 20 | 98-7524 | 1 | Gasket |
| 30 | 117-0330 | 1 | Gasket-Pump, Water |
| 40 | 117-0327 | 1 | Gasket-Case, Gear |
| 60 | 120-7852 | 1 | Seal-Oil |
| 70 | 100-1873 | 1 | Gasket-Case, Bearing |
| 80 | 110-3724 | 1 | Seal-Oil |
| 90 | 100-1876 | 1 | Gasket-Cover, Case |
| 100 | 100-2209 | 1 | O-Ring |
| 110 | 105-3776 | 1 | O-Ring |
| 120 | 100-2003 | 1 | Gasket-Pump, Oil |
| 130 | 125-9105 | 1 | Gasket |
| 140 | 98-7654 | 1 | Gasket |
| 150 | 98-9636 | 1 | Gasket-Pump, Fuel |

# Attachments and Accessories

## For 07386TC Workman HDX 4-Wheel Drive Utility Vehicle with Bed

| Product Name | Model/Part |
|---|---|
| Pro Sweep Turf Sweeper | 07068 |
| Full Area Flatbed | 07301 |
| Full Area Flatbed Side Kit | 07302 |
| Fold Down Side Kit | 07303 |
| High-Flow Hydraulic Kit | 07316 |
| 2/3 Area Flatbed | 07321 |
| 2/3 Area Flatbed Side Kit | 07322 |
| Bed Liner | 07331 |
| 1/3 Area Flatbed | 07341 |
| 1/3 Area Platform Lift | 07347 |
| Heater Kit | 07349 |
| Canopy | 07372 |
| Windshield | 07373 |
| 4 Post Roll-Over Protection System | 07378 |
| Hand Throttle Kit | 07388 |
| Cab Kit | 07392 |
| Door Kit with Sliding Window | 07393 |
| Hand Throttle Kit, Serial Number 400000000 and After Workman HDX Utility Vehicle | 07408 |
| Rear PTO Kit | 07419 |
| Aggressive Tire Kit | 07422 |
| Synthetic Turf Conditioner, Tow-Behind Accessory | 08791 |
| ProCore Processor | 09749 |
| Backup Alarm Kit | 107-8037 |
| Premium ATF (Drum) | 108-1185 |
| Premium ATF (Pail) | 108-1186 |
| Premium All Purpose Grease (Tube) | 108-1190 |
| Remote Hydraulics Manifold Kit | 110-2626 |
| Tire-Rear, 24x13-12 | 110-5132 |
| Wheel-12in x 8.0in | 114-8260 |
| Wireless Hourmeter | 115-4754 |
| Horn Kit | 115-7825 |
| Side Mirror Kit | 115-7849 |
| Roll-Over Protection System Signal Kit | 117-4825 |
| Worklight Kit | 117-4827 |
| Remote Hydraulic Float Kit | 117-4828 |
| Receiver Hitch Kit | 117-4831 |
| Trailer Signal Kit | 117-4836 |
| Manual 4-Wheel Drive Control Kit | 119-0817 |
| Canopy for Four-Post Roll-Over Protection System Kit | 119-9457 |
| Road Light and Homologation Kit | 120-5030 |
| Brake and Signal Light Kit | 120-5045 |
| High Air Intake Kit | 121-6285 |
| Front Differential Interrupter Kit | 121-6337 |
| Trailer Brake Kit | 125-0123 |
| Tailpipe Extension Kit | 127-7397 |
| 1/3 Area Cover Kit | 127-8739 |

# Attachments and Accessories (continued)


Exterior Mirror Kit ..... 130-5448
Interior Mirror Kit ..... 130-5449
Beacon Kit ..... 130-5484
Work Light Kit ..... 130-5485
Windshield Washer Fluid Kit, 2015 and after Workman MD/HD Series Utility Vehicle ..... 130-5615
Hitch ASM ..... 131-3462
Tire/Wheel ASM (24 X 13-12) ..... 131-8432
4-Wheel Drive Wire Harness Kit ..... 132-6774
LED Worklight Kit ..... 133-0554
ROPS Beacon Kit ..... 133-0609
Bracket-light, Canopy ..... 133-0627
Wheel/Tire ASM, A502 (20X9-12)Semi-Aggressive ..... 136-6308
Wheel/Tire ASM, K502 (24X12-12)Semi-Aggressive ..... 136-6309
Wheel/Tire ASM, A404 (20X9-12)Smooth ..... 136-6334
Wheel/Tire ASM, A404 (24X12-12)Smooth ..... 136-6335
Wireless Hourmeter Kit ..... 138-5655
Multi Pro WM Turf Sprayer ..... 41240
Spreader Base Unit ..... 41253
Vicon Spreader ..... 41256
Topdresser 1800 ..... 44225
Core Harvester Adapter Kit ..... 44242
Topdresser 2500 ..... 44507
Pro Force Debris Blower ..... 44552
Pro Force Debris Blower ..... 44553
Pro Force Debris Blower ..... 44554
ProPass 200 Top Dresser with Twin Spinner ..... 44701
ProPass 200 Top Dresser with Twin Spinner and Wireless Control ..... 44751
12 Inch Rear Wheel Weights ..... 81115
Automatic Tailgate Release Kit ..... 92-1220
Fuse Block ..... 92-2641
PTO Over Running Clutch Kit ..... 92-2655
Topdresser 1800 Lift Kit ..... 92-4452
Spark Arrestor Screen ..... 94-8157
Tire-Rear, 23x8.50-12 ..... 98-2993
Tire-Rear, Industrial ..... 99-1091

**Notes:**

**Notes:**

TORO®

Count on it.