Form No. 3445-104 Rev B

TORO®

Count on it.

Parts Catalog

# Greensmaster® 3150

## 2-Wheel Drive Traction Unit

**Model No. 04358—Serial No. 409050852 and Up**

Register at www.Toro.com.
Original Instructions (EN)

CE

*3445-104* B

# Ordering Replacement Parts

To order replacement parts, please supply the part number, the quantity, and the description of each part desired.

### Understanding Reference Numbers

Each identified part in an illustration has a reference number. The reference number for a part also appears in the parts list, along with other information about the part.

This catalog uses two special reference number formats, one to indicate parts in a service assembly and another to indicate the quantity of a given part in an illustration.

### Service Assembly Reference Numbers

Parts in service assemblies have reference numbers in the form a:b. The a represents the reference number of the entire service assembly and the b represents a sequential number unique to each part within the service assembly.

For example, a wheel assembly might be identified by reference number 6, the tire by 6:1, the valve by 6:2, and the wheel by 6:3. When you order the assembly identified by reference number 6, you receive all parts identified by reference numbers 6:1,6:2, and 6:3. However, you may also order any part individually. Reference numbers of this type appear in illustration and in parts lists.

### Reference Numbers Indicating Quantity

In an illustration, if a reference number indicates more than one part, the reference number has the form nX y. The n represents the quantity of the part, the X is the multiplication symbol, and the y represents the reference number.

For example, in an illustration, the reference number 2X 37 means that two of the parts identified by reference number 37 are indicated.

# Contents

ROPS and Frame Assembly . . . 4
Steering Arm Assembly . . . 5
Traction Pedal Assembly . . . 6
Joystick Assembly . . . 7
Joystick Bracket Assembly No. 120-5280 . . . 8
Speed Selector Lever and Console Assembly . . . 9
Control Panel Assembly . . . 10
Engine Installation Assembly . . . 11
Fuel Tank Assembly . . . 13
Wire Harness Assembly . . . 14
Wire Harness Assembly No. 122-1453 . . . 15
Battery Assembly . . . 16
Ignition and Reed Switch Assembly . . . 17
Engine Wire Harness Assembly . . . 18
Ground Drive Assembly . . . 19
Hydraulic Motor Assembly (CW) No. 110-4016 . . . 20
Hydraulic Motor Assembly (CCW) No. 110-4015 . . . 21
Hydrostat and Gear Pump Drive Assembly . . . 22
Hydraulic Gear Pump Assembly No. 114-9956 . . . 23
Hydraulic Pump Assembly No. 121-9557 . . . 24
Neutral System Assembly . . . 26
Front Hydraulic Reel Drive and Hose Assembly . . . 27
Hydraulic Reel Motor Assembly No. 120-2072 . . . 28
Hydraulic Steering Hose and Center Lift Cylinder Hose Assembly . . . 29
Rear Hydraulic Reel Drive and Hose Assembly . . . 30
Front Lift Cylinders Hose and Filter Assembly . . . 31
Steering Wheel and Valve Assembly . . . 32
Steering Valve Assembly No. 114-4672 . . . 33
Right Hand and Left Hand Lift Cylinder Assembly . . . 34
Hydraulic Cylinder Assembly No. 131-2787 . . . 35
Steering Cylinder and Center Lift Cylinder Assembly . . . 36
Hydraulic Cylinder Assembly No. 131-2786 . . . 37
Hydraulic Manifold Assembly . . . 38
Hydraulic Manifold Assembly No. 112-0289 . . . 39
Hydraulic Reservoir and Leak Detector Assembly . . . 41
Center Pull Frame Assembly . . . 43
Left Pull Frame Assembly . . . 45
Right Pull Frame Assembly . . . 46
Front Wheel and Brake Assembly . . . 47
Brake Assembly No. 104-7705 . . . 48
Rear Wheel Assembly . . . 49
Seat Assembly . . . 50
Attachments and Accessories . . . 51

**© 2021—The Toro® Company**
**8111 Lyndale Avenue South**
**Bloomington, MN 55420**



**Contact us at www.Toro.com.**
**Printed in the USA.**
**All Rights Reserved**

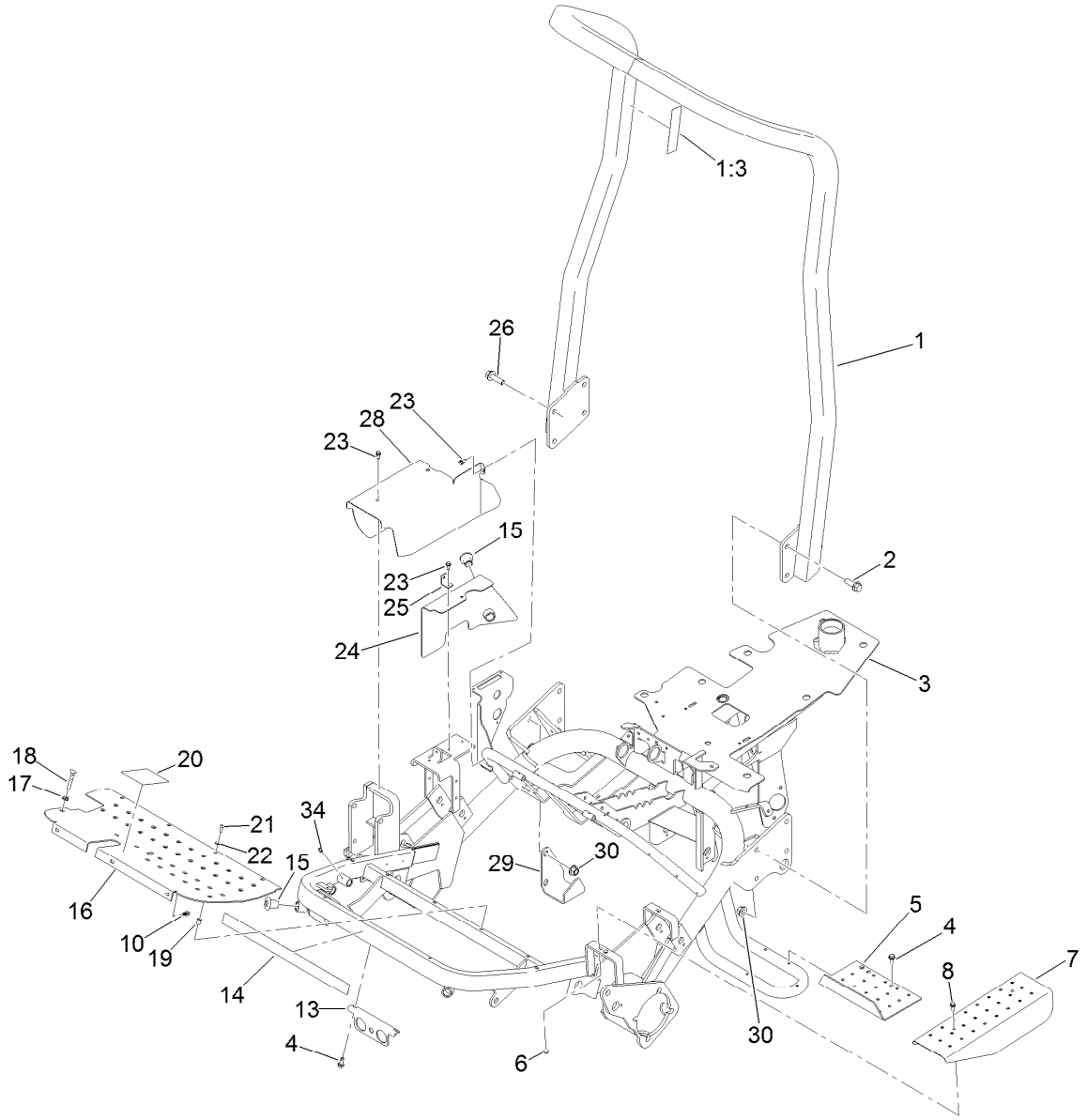


# ROPS and Frame Assembly

| Ref. | Part Number | Qty. | Description |
|---|---|---|---|
| 1 | 133-2308 | 1 | ROPS ASM |
| 1:3 | 115-8226 | 1 | Decal-ROPS |
| 2 | 130-6482 | 6 | Screw-HHF |
| 3 | 127-6143-01 | 1 | Frame |
| 4 | 32104-32 | 5 | Screw-HWH |
| 5 | 130-0103-01 | 1 | Step |
| 6 | 32128-33 | 2 | Nut-HF |
| 7 | 83-0200-01 | 1 | Plate-Cover, LH |
| 8 | 115-5103 | 2 | Screw-HHF |
| 10 | 99-6810 | 3 | Screw-HHF |
| 13 | 107-2552-01 | 1 | Bracket-Bulkhead |
| 14 | 115-5216 | 1 | Decal |
| 15 | 83-1700 | 3 | Bushing-Flange |
| 16 | 127-2225-01 | 1 | Plate-Footrest |

| Ref. | Part Number | Qty. | Description |
|---|---|---|---|
| 17 | 32128-20 | 1 | Nut-HF |
| 18 | 17-9426 | 1 | Screw-Handle |
| 19 | 32148-6 | 7 | Nut-Clinch |
| 20 | 93-8062 | 1 | Decal-Brake, Parking |
| 21 | 3274-31 | 4 | Screw-HSBH |
| 22 | 3256-1 | 4 | Washer-Flat |
| 23 | 32144-10 | 5 | Screw-HWH |
| 24 | 105-8282-01 | 1 | Shield-Side |
| 25 | 120-3172 | 1 | Bracket |
| 26 | 130-6481 | 2 | Screw-HHF |
| 28 | 138-8507-01 | 1 | Cover-Right |
| 29 | 105-8263-01 | 1 | Bracket-ROPS |
| 30 | 99-5107 | 8 | Nut-Lock |
| 34 | 302-5 | 1 | Fitting-Grease |

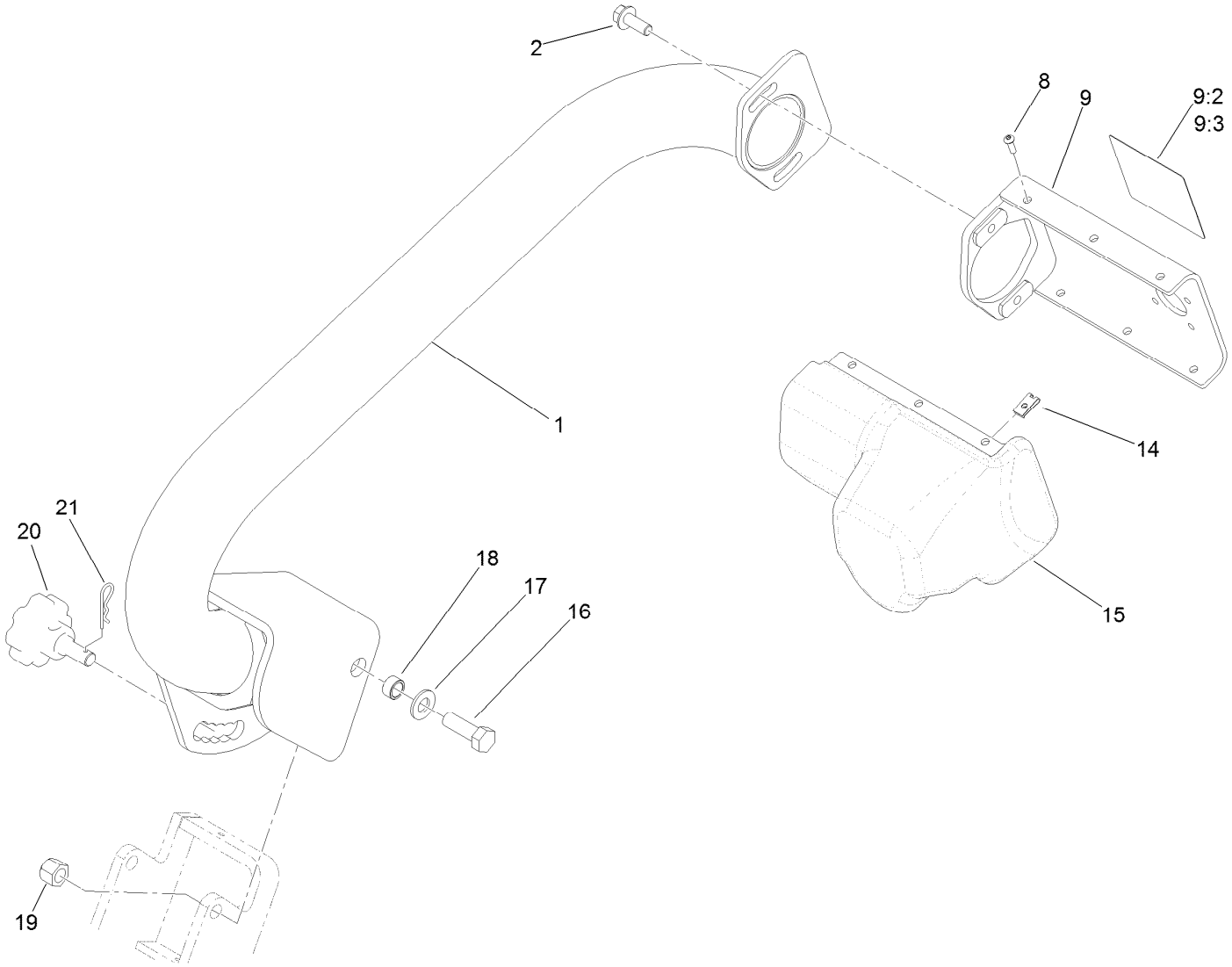


# Steering Arm Assembly

| *Ref.* | *Part Number* | *Qty.* | *Description* |
|---|---|---|---|
| 1 | 138-5021-01 | 1 | Arm-Steering |
| 2 | 3234-42 | 2 | Screw-HHF |
| 8 | 3274-39 | 6 | Screw-HSBH |
| 9 | 136-8571 | 1 | Mount-Steering |
| 9:2 | 136-8506 | 1 | Decal-Danger |
| 9:3 | 136-8505 | 1 | Decal-Danger, CE |
| 14 | 3290-277 | 6 | Nut-Speed |
| 15 | 119-9300 | 1 | Cover-Valve, Steering |
| 16 | 325-6 | 2 | Screw-HH |
| 17 | 3256-26 | 2 | Washer-Flat |
| 18 | 47-2890 | 2 | Bushing |
| 19 | 3296-23 | 2 | Nut-Lock, NI |
| 20 | 117-9513 | 1 | Knob-Steering |
| 21 | 3290-467 | 1 | Pin-Hair |

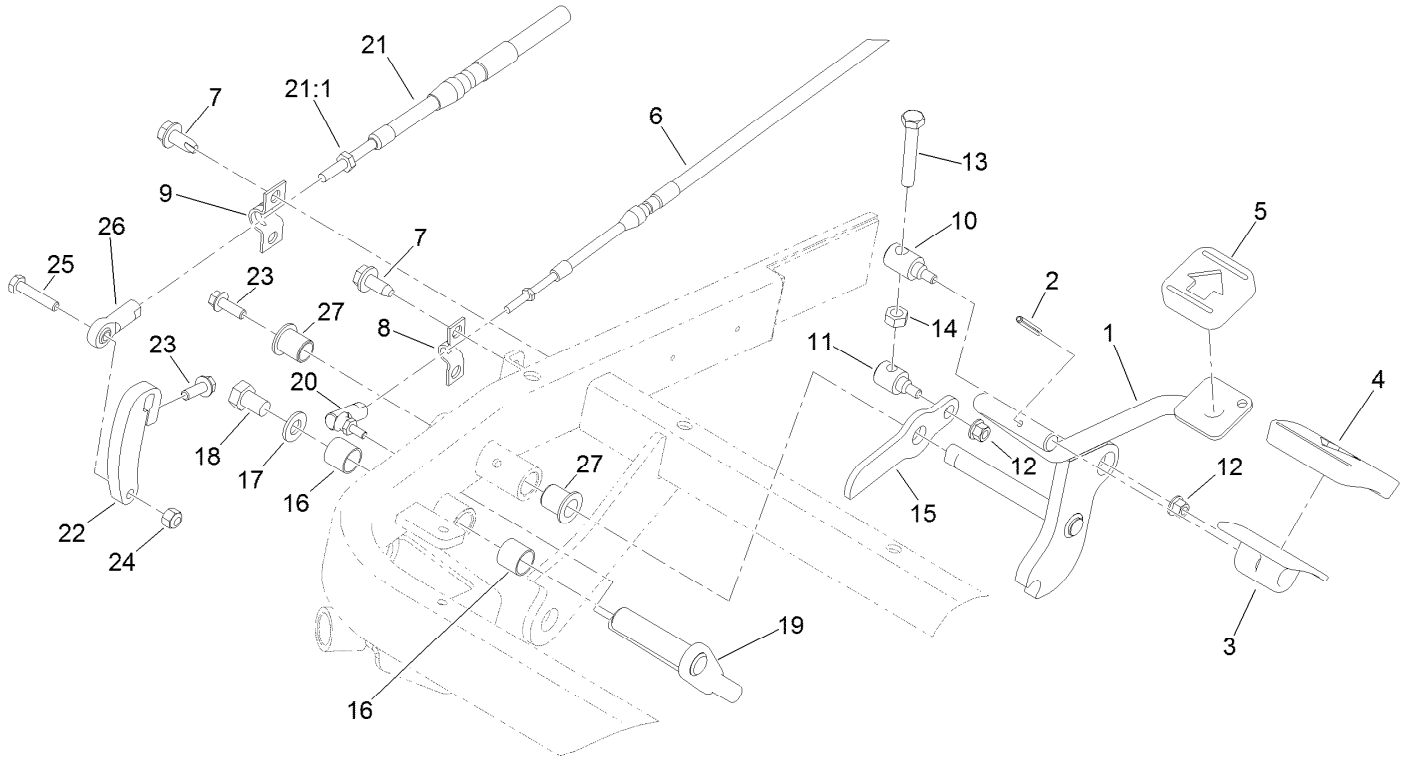


# Traction Pedal Assembly

| Ref. | Part Number | Qty. | Description |
|---|---|---|---|
| 1 | 127-2222-01 | 1 | Pedal-Traction |
| 2 | 32121-45 | 1 | Pin-Spring |
| 3 | 117-9507 | 1 | Pedal-Accelerator |
| 4 | 74-9100 | 1 | Pad-Pedal, Forward |
| 5 | 74-9110 | 1 | Pad-Pedal, Reverse |
| 6 | 127-2244 | 1 | Cable-Neutral Lock |
| 7 | 32104-32 | 4 | Screw-HWH |
| 8 | 93-2279 | 1 | Clamp-Cable |
| 9 | 93-2092 | 1 | Clamp-Cable |
| 10 | 94-1375 | 1 | Trunnion-Bracket, Lock |
| 11 | 94-1374 | 1 | Trunnion-Bracket, Mow |
| 12 | 81-0130 | 2 | Nut-Flange, NI |
| 13 | 94-3489 | 1 | Screw-HH |
| 14 | 33014-00 | 1 | Nut-Hex |

| Ref. | Part Number | Qty. | Description |
|---|---|---|---|
| 15 | 127-2241 | 1 | Plate-Stop |
| 16 | 256-311 | 2 | Bushing-Split |
| 17 | 3256-24 | 1 | Washer-Flat |
| 18 | 33115-016 | 1 | Screw-HH |
| 19 | 132-3803 | 1 | Lock-Neutral |
| 20 | 2411-38 | 1 | Joint-Ball |
| 21 | 105-5445 | 1 | Cable-Traction |
| 21:1 | 3220-1 | 2 | Nut-Jam |
| 22 | 130-6539 | 1 | Lever-Traction |
| 23 | 117-8304 | 2 | Screw-HHF |
| 24 | 3296-42 | 1 | Nut-Lock, NI |
| 25 | 321-8 | 1 | Screw-HH |
| 26 | 2411-41 | 1 | Rod End-Ball Joint |
| 27 | 125-8775 | 2 | Bushing-Flange |

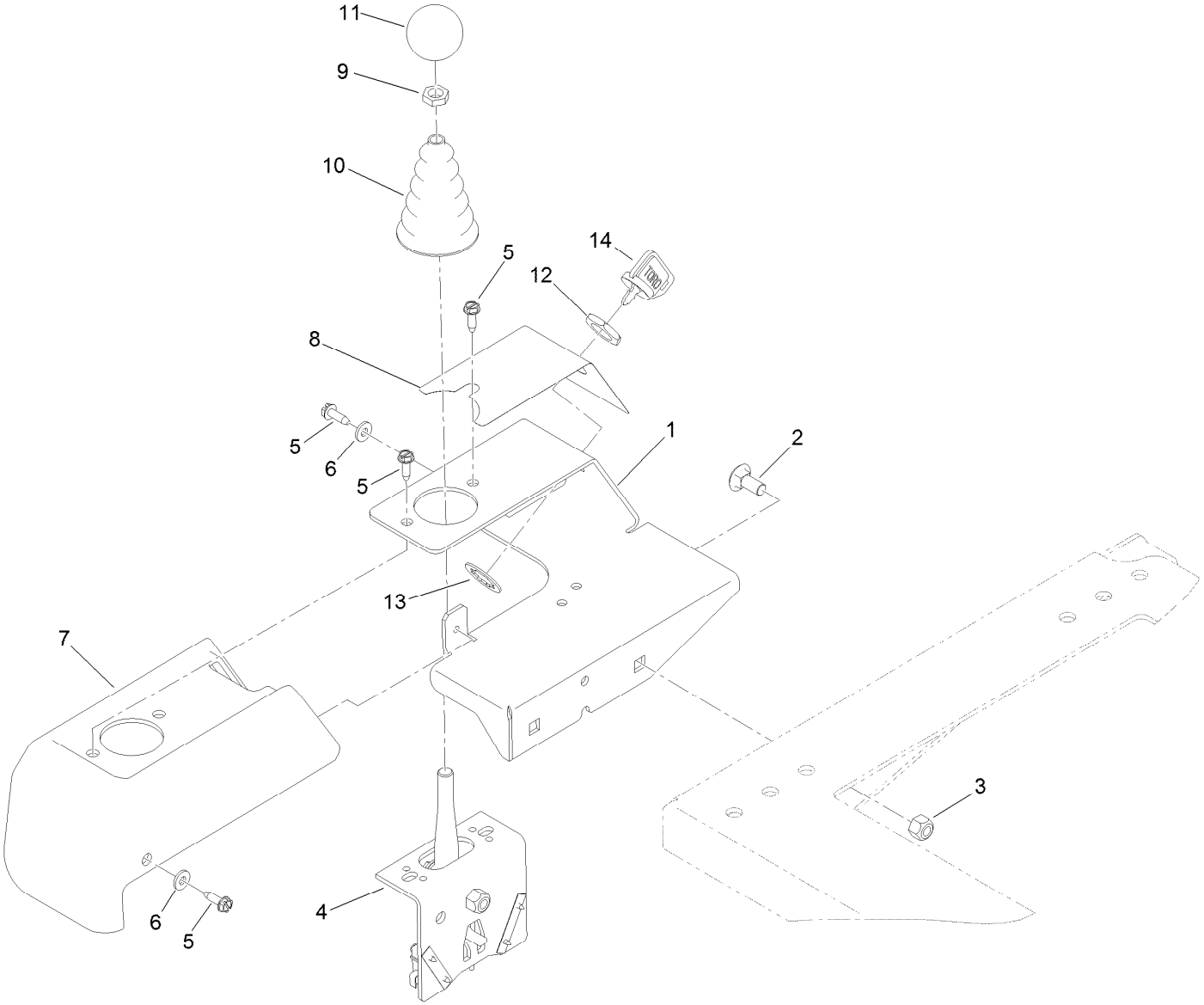


# Joystick Assembly

| Ref. | Part Number | Qty. | Description |
|---|---|---|---|
| 1 | 105-8252-03 | 1 | Bracket-Pod |
| 2 | 3230-1 | 2 | Bolt-CARR |
| 3 | 3296-29 | 2 | Nut-Lock, NI |
| 4 | 120-5280 | 1 | Bracket-Joystick |
| 5 | 32144-19 | 4 | Screw-SHWH |
| 6 | 3256-14 | 2 | Washer-Flat |
| 7 | 105-8251 | 1 | Pod |
| 8 | 105-8305 | 1 | Decal-Panel, Control |
| 9 | 3218-3 | 1 | Nut-Jam |
| 10 | 93-5961 | 1 | Boot-Lever |
| 11 | 233-42 | 1 | Knob |
| 12 | 107-1571 | 1 | Nut-Hex |
| 13 | 107-1572 | 1 | Washer-Lock |
| 14 | 63-8360 | 2 | Key-Ignition |

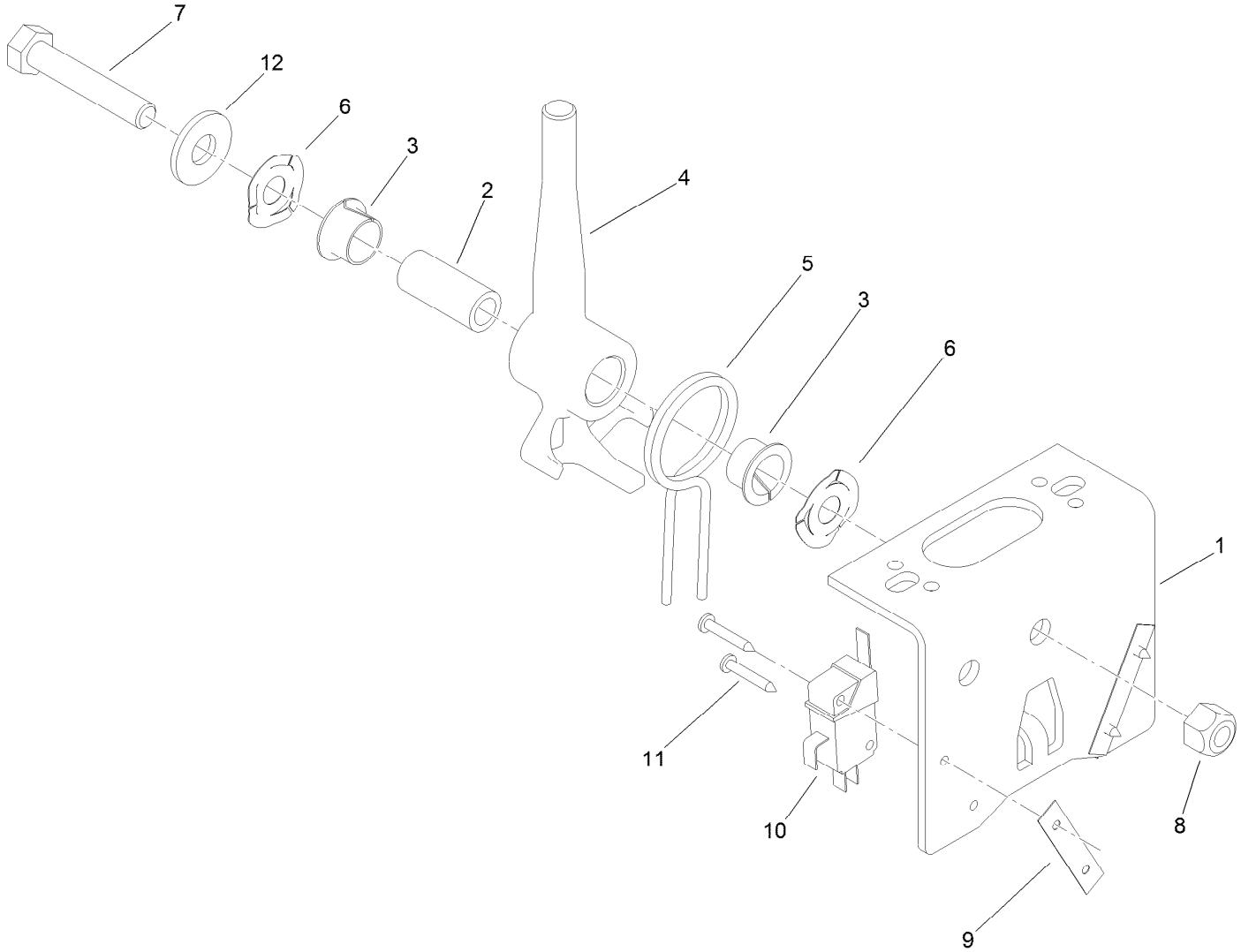


# Joystick Bracket Assembly No. 120-5280

| *Ref.* | *Part Number* | *Qty.* | *Description* |
|---|---|---|---|
| 1 | 115-5357-03 | 1 | Bracket-Joystick |
| 2 | 106-4192 | 1 | Spacer |
| 3 | 93-5547 | 2 | Bushing-Nylon |
| 4 | 119-3540 | 1 | Hub-Pivot, Joystick |
| 5 | 105-8289 | 1 | Spring-Torsion |
| 6 | 106-4193 | 2 | Washer-Finger, Spring |
| 7 | 322-9 | 1 | Screw-HH |
| 8 | 3296-29 | 1 | Nut-Lock, NI |
| 9 | 3290-354 | 2 | Nut-Speed |
| 10 | 108-6496 | 2 | Switch (W/Boot) |
| 11 | 95-3003 | 4 | Screw-PPHTF |
| 12 | 3256-3 | 1 | Washer-Flat |

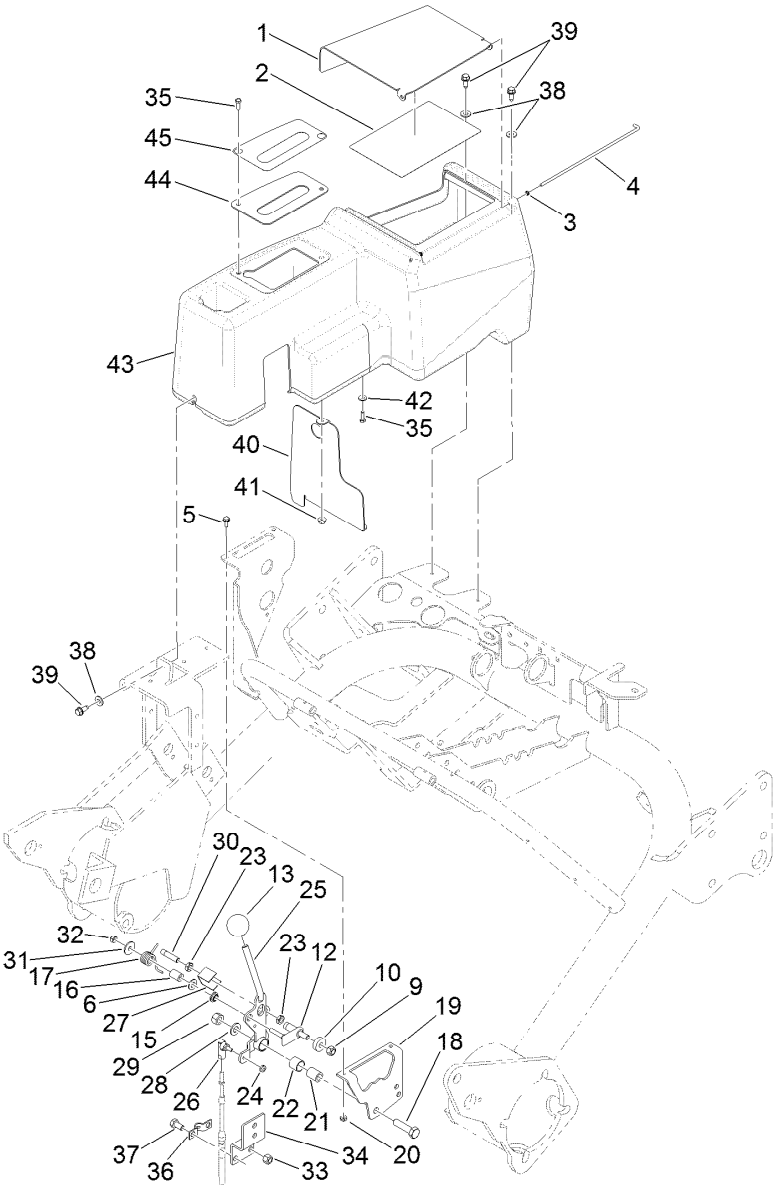


# Speed Selector Lever and Console Assembly

| Ref. | Part Number | Qty. | Description |
|---|---|---|---|
| 1 | 105-8254-03 | 1 | Lid-Console |
| 2 | 115-8156 | 1 | Decal-Speed, Clip |
| 3 | 105-8283 | 2 | Bushing |
| 4 | 105-8256 | 1 | Rod-Hinge |
| 5 | 3290-321 | 2 | Screw-HWH |
| 6 | 3256-23 | 1 | Washer-Plain |
| 9 | 33024-00 | 1 | Nut-Lock, NI |
| 10 | 251-259 | 1 | Bearing-Ball |
| 12 | 125-1928 | 1 | Pin |
| 13 | 233-42 | 1 | Knob |
| 15 | 94-9619 | 1 | Bushing |
| 16 | 94-9618 | 1 | Spacer-Spring |
| 17 | 94-9620 | 1 | Spring-Torsion |
| 18 | 33115-040 | 1 | Screw-HH |
| 19 | 94-6398 | 1 | Bracket-Traction |
| 20 | 3296-12 | 2 | Nut-Lock, NI |
| 21 | 94-1378 | 1 | Tube-Pivot, Handle |
| 22 | 136-8417 | 1 | Bushing |
| 23 | 117-4059 | 2 | Nut-Hex |
| 24 | 3296-27 | 1 | Nut-Lock, NI |
| 25 | 94-9611 | 1 | Handle |
| 26 | 2411-38 | 1 | Joint-Ball |
| 27 | 106-6356 | 1 | Shield-Switch |
| 28 | 3256-24 | 1 | Washer-Flat |
| 29 | 33025-00 | 1 | Nut-Lock, NI |
| 30 | 120-5348 | 1 | Actuator-Switch |
| 31 | 3256-67 | 1 | Washer |
| 32 | 33023-00 | 1 | Nut-Lock |
| 33 | 3296-29 | 4 | Nut-Lock, NI |
| 34 | 105-5417-03 | 1 | Bracket-Cable, Shifter |
| 35 | 3290-134 | 4 | Screw |
| 36 | 93-2279 | 1 | Clamp-Cable |
| 37 | 322-2 | 4 | Screw-HH |
| 38 | 3256-22 | 3 | Washer-Flat |
| 39 | 32144-10 | 3 | Screw-HWH |
| 40 | 105-8255-03 | 1 | Baffle-Console |
| 41 | 3290-148 | 4 | Nut-HF |
| 42 | 3256-77 | 2 | Washer-Flat |
| 43 | 105-8250 | 1 | Console |
| 44 | 105-8280-03 | 1 | Plate-Console |
| 45 | 105-8306 | 1 | Decal-Selector, Speed |

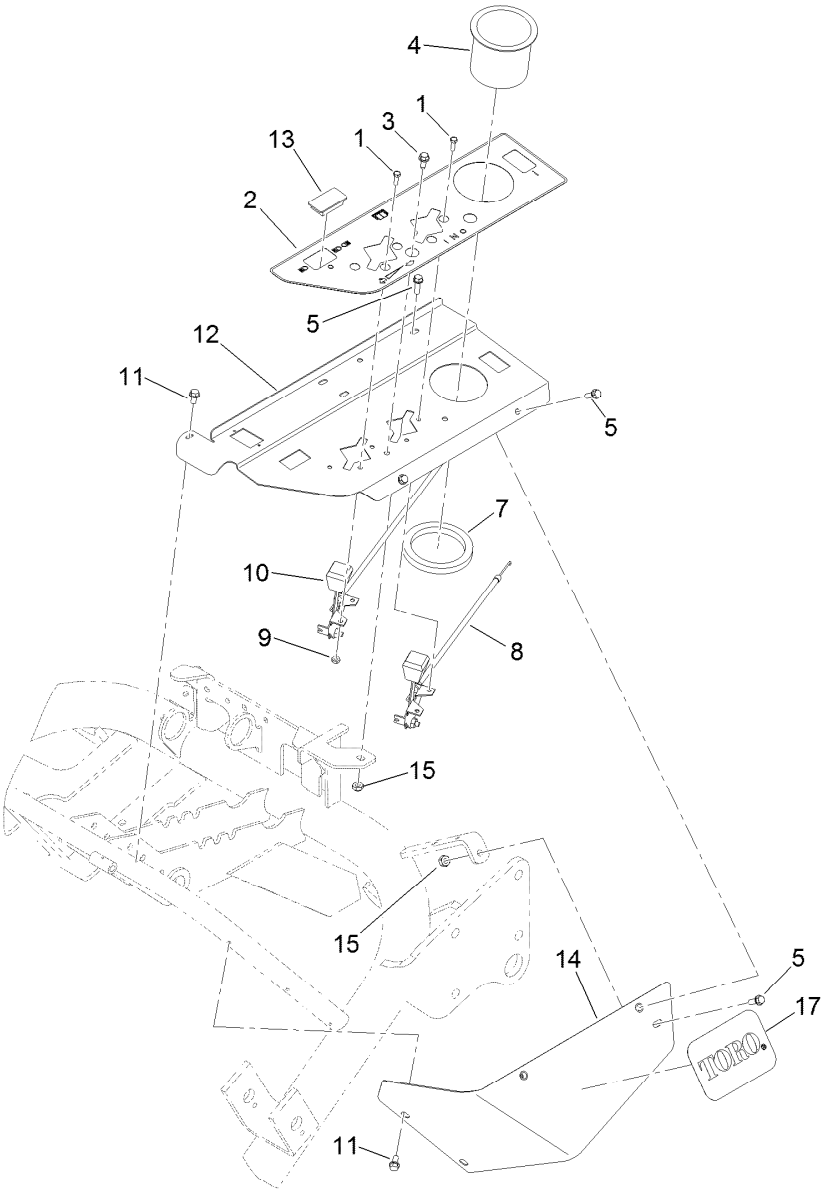


# Control Panel Assembly

| Ref. | Part Number | Qty. | Description |
|---|---|---|---|
| 1 | 3290-134 | 4 | Screw |
| 2 | 131-2007 | 1 | Decal-Panel, Control (Left) |
| 3 | 32144-10 | 2 | Screw-HWH |
| 4 | 94-1410 | 1 | Holder-Can, Beverage |
| 5 | 32105-15 | 4 | Screw-HWH |
| 7 | 104-1476 | 1 | Ring-Rubber |
| 8 | 83-0040 | 1 | Control-Choke |
| 9 | 3296-12 | 4 | Nut-Lock, NI |
| 10 | 83-0030 | 1 | Control-Throttle |
| 11 | 32104-116 | 3 | Screw-HWHTF |
| 12 | 127-2246-03 | 1 | Panel-Control |
| 13 | 99-7420 | 1 | Plug-Hole |
| 14 | 105-5411 | 1 | Shield-Cover, Valve |
| 15 | 3296-16 | 2 | Nut-Lock, NI |
| 17 | 94-2579 | 1 | Decal |

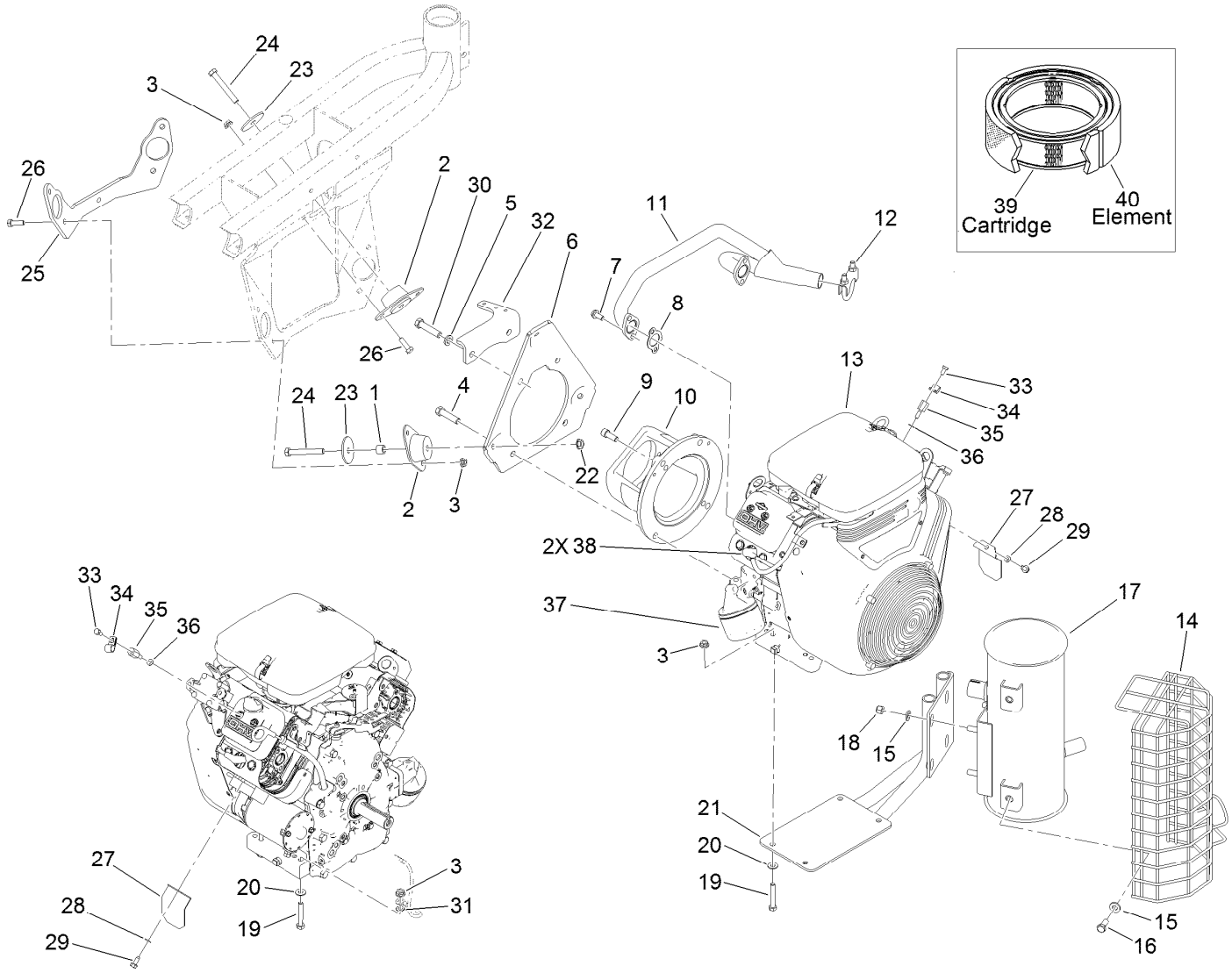


# Engine Installation Assembly

| Ref. | Part Number | Qty. | Description |
|---|---|---|---|
| 1 | 93-9847 | 2 | Spacer |
| 2 | 125-5244 | 3 | Mount-Engine |
| 3 | 32128-20 | 10 | Nut-HF |
| 4 | 324-7 | 2 | Screw-HH |
| 5 | 3253-6 | 4 | Washer-Lock |
| 6 | 85-8120-03 | 1 | Plate-Mount, Engine |
| 7 | 94-5300 | 4 | Screw-HHF |
| 8 | 94-3449 | 2 | Gasket-Manifold, Exhaust |
| 9 | 3274-7 | 2 | Screw-HSH |
| 10 | 83-1060-0P | 1 | Pump Mount - Mach. *b |
| 11 | 119-4128 | 1 | Manifold-Exhaust |
| 12 | 2112-11 | 1 | Clamp-Muffler |
| 13 | 139-6524 | 1 | Engine-Briggs Stratton,Vanguard ● |
| 14 | 112-0291 | 1 | Shield-Muffler |
| 15 | 100-4852 | 4 | Washer-Hardened |
| 16 | 323-5 | 4 | Screw-HH |
| 17 | 110-4001 | 1 | Muffler |

| Ref. | Part Number | Qty. | Description |
|---|---|---|---|
| 18 | 32128-19 | 4 | Nut-HF Lock,Large Flg |
| 19 | 322-10 | 4 | Screw-HH |
| 20 | 87-8640 | 4 | Washer-Flat |
| 21 | 127-6130-03 | 1 | Mount-Muffler |
| 22 | 3290-357 | 3 | Nut-HSF |
| 23 | 83-1040 | 3 | Washer-Flat |
| 24 | 323-13 | 3 | Screw-HH |
| 25 | 121-9539-01 | 1 | Support-Engine |
| 26 | 322-5 | 6 | Screw-HH |
| 27 | 83-2310 | 1 | Shield-Regulator |
| 28 | 3253-3 | 1 | Washer-Lock |
| 29 | 32144-10 | 1 | Screw-HWH |
| 30 | 324-8 | 2 | Screw-HH |
| 31 | 3255-8 | 1 | Washer-Lock |
| 32 | 105-4307-03 | 1 | Bracket-Spring |
| 33 | 33113-012 | 1 | Screw-HH |
| 34 | 2412-94 | 1 | Clamp |
| 35 | 106-4616 | 1 | Screw-Spacer |

● Obtain parts from www.briggsandstratton.com

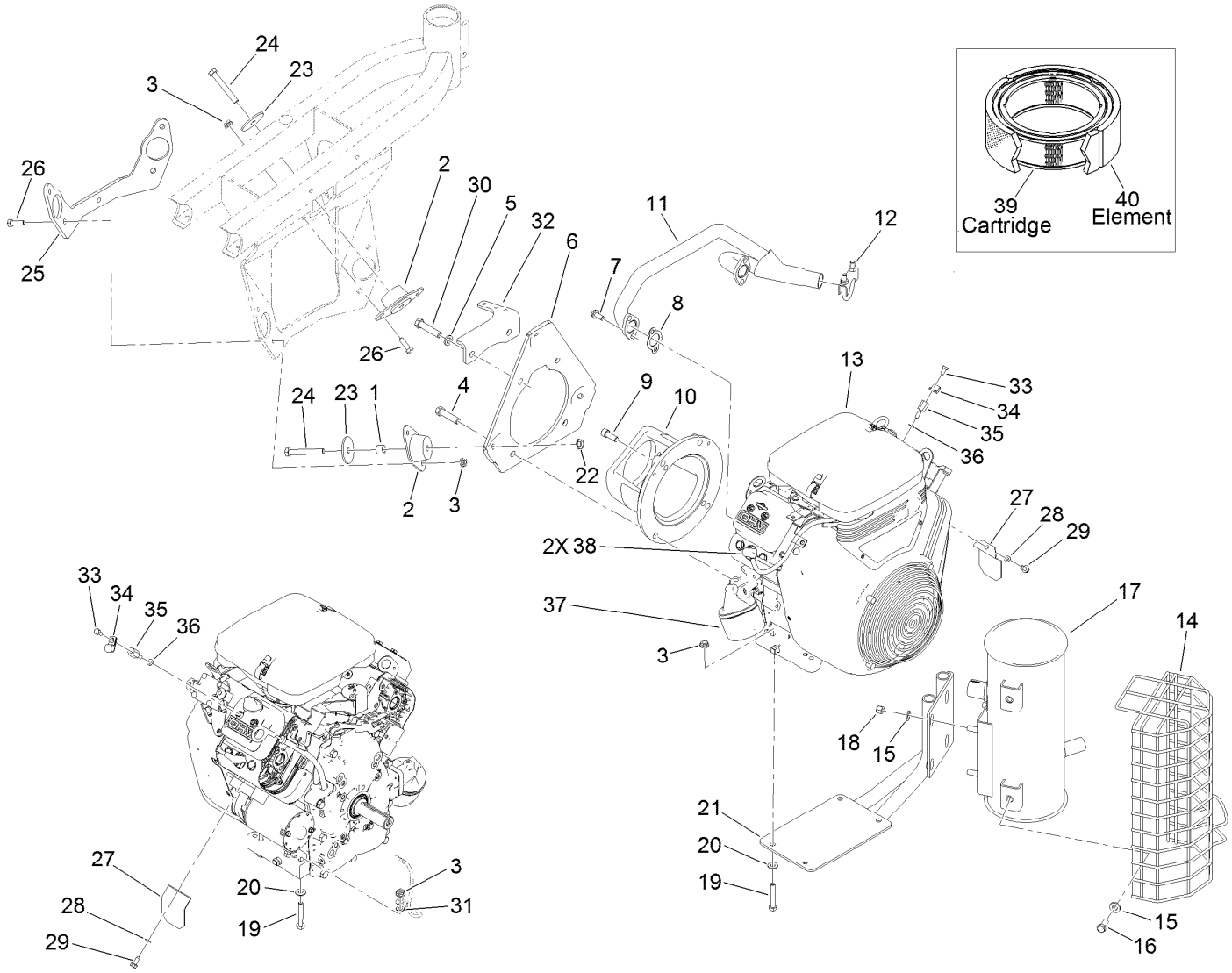


# Engine Installation Assembly (continued)

| Ref. | Part Number | Qty. | Description |
|---|---|---|---|
| 36 | 127-2229 | 1 | Washer-Fiber |
| 37 | 107-7817 | 1 | Filter-Oil, Engine |
| 38 | 108-6945 | 2 | Plug-Spark |

| Ref. | Part Number | Qty. | Description |
|---|---|---|---|
| 39 | 92-0527 | 1 | Cartridge-Cleaner, Air |
| 40 | 92-0530 | 1 | Element-Filter |

● Obtain parts from www.briggsandstratton.com

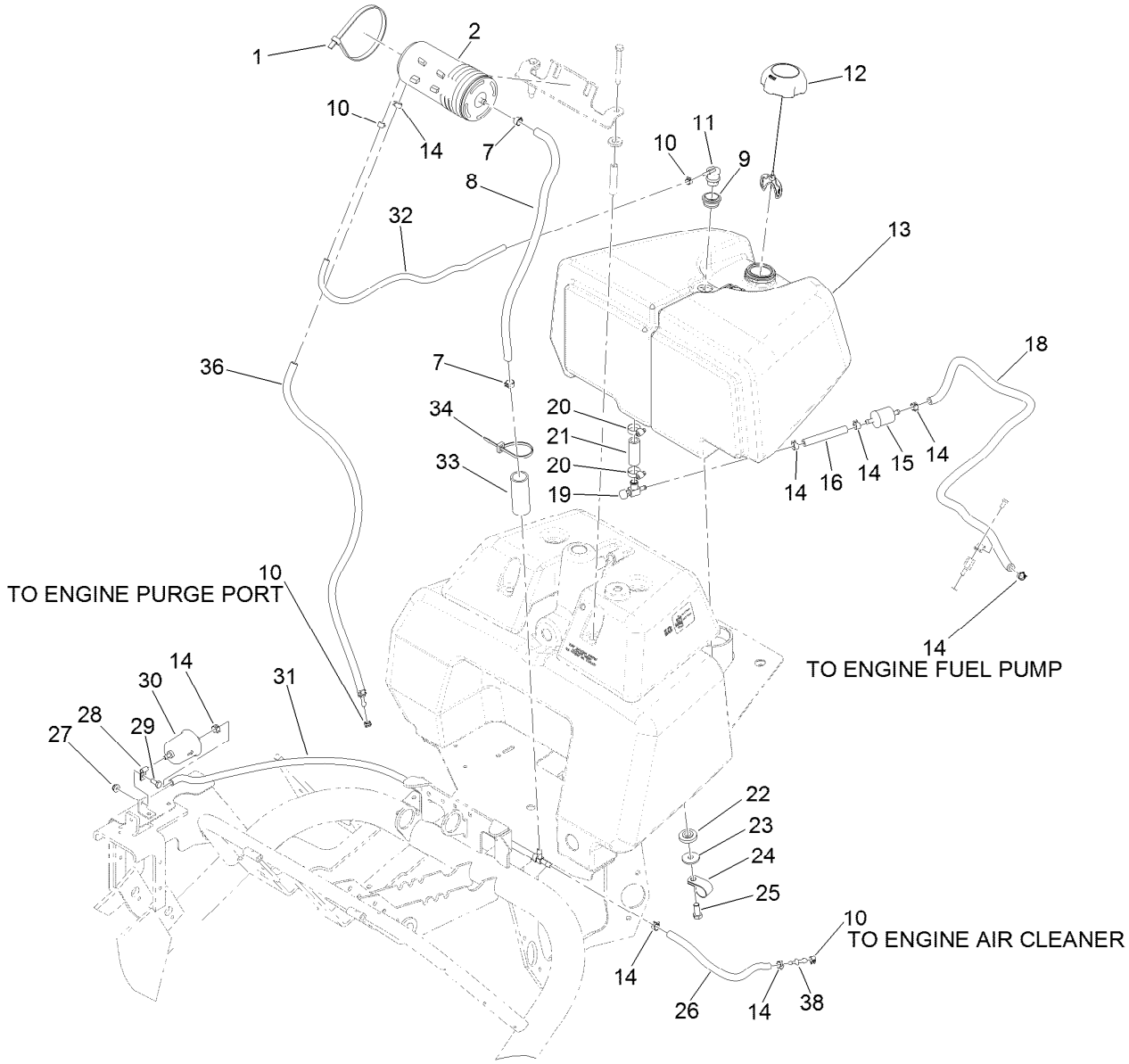


# Fuel Tank Assembly

| Ref. | Part Number | Qty. | Description |
|---|---|---|---|
| 1 | 103-2446 | 2 | Tie-Cable |
| 2 | 117-1221 | 1 | Canister-Carbon, 800Cc |
| 7 | 92-2379 | 2 | Clamp-Hose |
| 8 | 114-4028 | 1 | Hose-Fuel |
| 9 | 114-0284 | 1 | Grommet |
| 10 | 2412-80 | 4 | Clamp-Hose |
| 11 | 119-3547 | 1 | Valve-Vent, Fuel |
| 12 | 137-4127 | 1 | Cap-Fuel |
| 13 | 115-5387 | 1 | Tank-Fuel |
| 14 | 2412-98 | 8 | Clamp-Hose |
| 15 | 94-2690 | 1 | Filter-Fuel |
| 16 | 109-0660 | 1 | Hose-Fuel |
| 18 | 109-0275 | 1 | Hose-Fuel |
| 19 | 83-1390 | 1 | Valve-Shut-Off, Fuel |
| 20 | 2412-36 | 2 | Clamp-Hose |
| 21 | 106-1128 | 1 | Hose-Fuel |

| Ref. | Part Number | Qty. | Description |
|---|---|---|---|
| 22 | 240-11 | 4 | Bushing-Flange |
| 23 | 63-8410 | 4 | Washer |
| 24 | 2412-41 | 3 | Clamp-R |
| 25 | 323-6 | 4 | Screw-HH |
| 26 | 109-0296 | 1 | Hose-Fuel |
| 27 | 104-7201 | 1 | Nut-HF, NI |
| 28 | 2412-72 | 1 | Clip-Closed, Insulated |
| 29 | 321-3 | 1 | Screw-HH |
| 30 | 121-2583 | 1 | Filter-Fuel, Inline |
| 31 | 121-2584 | 1 | Hose ASM |
| 32 | 119-8149 | 1 | Hose-Fuel |
| 33 | 121-2586 | 1 | Tubing-Convoluted, Slit |
| 34 | 3290-378 | 2 | Tie-Cable |
| 36 | 121-2585 | 1 | Hose ASM |
| 38 | 121-2573 | 1 | Fitting-Straight |

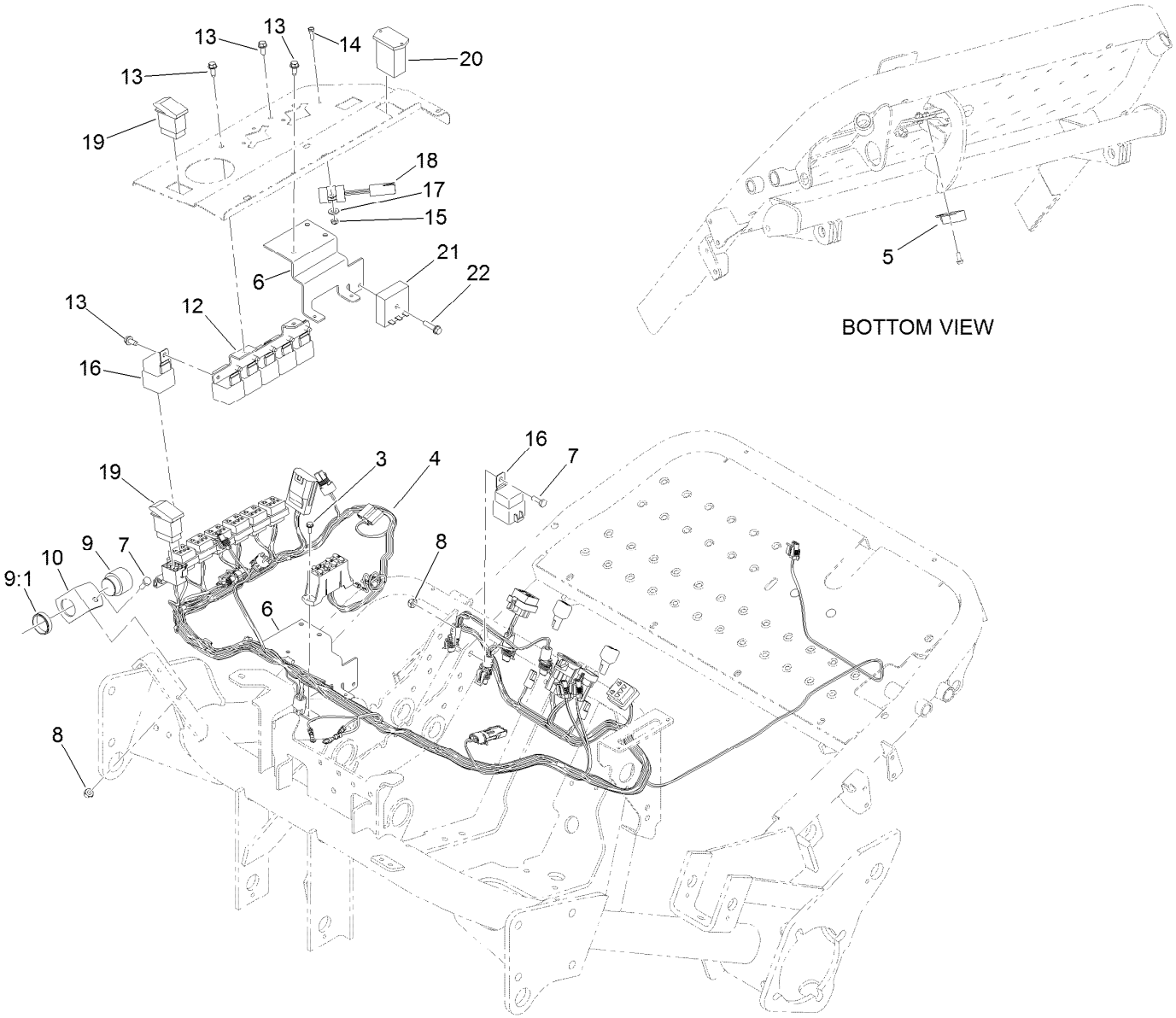


# Wire Harness Assembly

| Ref. | Part Number | Qty. | Description |
|---|---|---|---|
| 3 | 32144-1 | 2 | Screw-Taptite |
| 4 | 122-1453 | 1 | Harness-Wire, Main |
| 5 | 104-2057 | 1 | Sensor |
| 6 | 105-4310-01 | 1 | Bracket-Fuse |
| 7 | 321-4 | 2 | Screw-HH |
| 8 | 3296-16 | 2 | Nut-Lock, NI |
| 9 | 80-9330 | 1 | Audio Alarm ASM |
| 9:1 | 104-5107 | 1 | Nut-Plastic, Knurled |
| 10 | 83-1530 | 1 | Bracket-Support, Buzzer |
| 12 | 105-4306-03 | 1 | Bracket-Relay |

| Ref. | Part Number | Qty. | Description |
|---|---|---|---|
| 13 | 32144-10 | 9 | Screw-HWH |
| 14 | 3290-134 | 1 | Screw |
| 15 | 3296-12 | 1 | Nut-Lock, NI |
| 16 | 99-7430 | 7 | Relay-Mini |
| 17 | 3256-22 | 1 | Washer-Flat |
| 18 | 83-2280 | 1 | Timer-Delay |
| 19 | 106-2027 | 1 | Switch-Intermittent |
| 20 | 75-6820 | 1 | Hourmeter |
| 21 | 92-2538 | 1 | Module-Timer |
| 22 | 32144-86 | 1 | Screw-HWHTF |

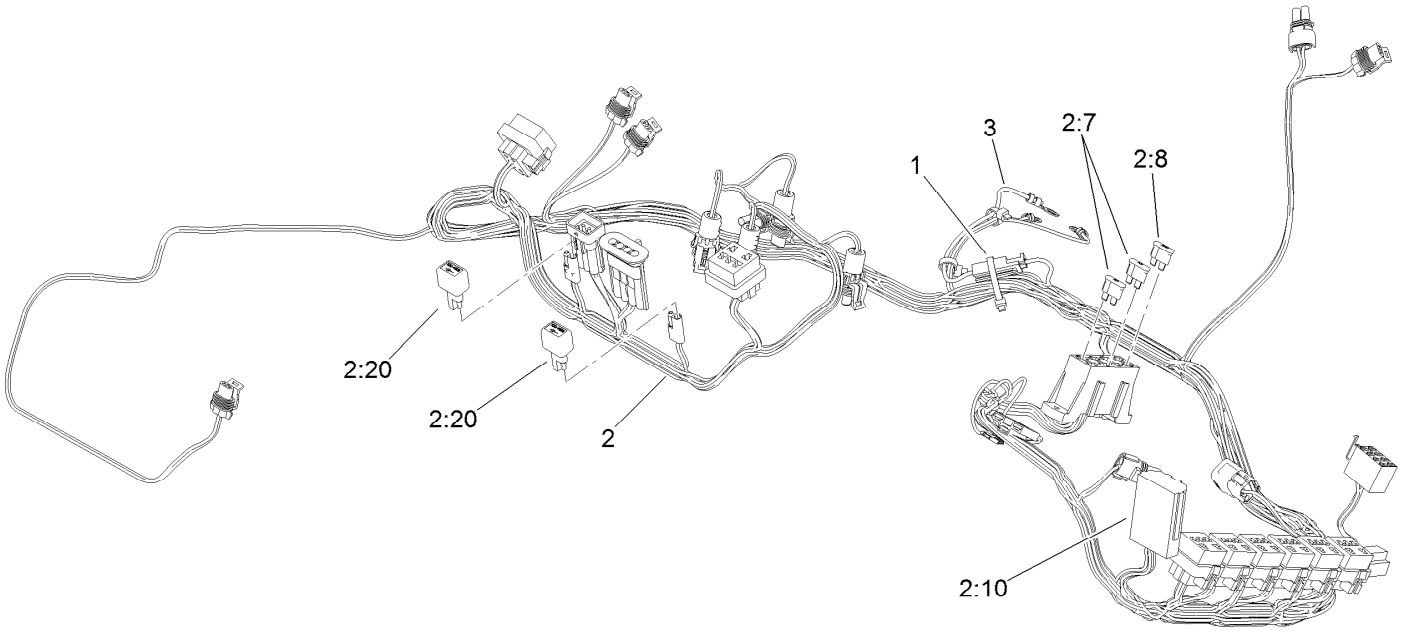


# Wire Harness Assembly No. 122-1453

| *Ref.* | *Part Number* | *Qty.* | *Description* |
|---|---|---|---|
| 1 | 3290-378 | 3 | Tie-Cable |
| 2 | | 1 | Harness-Wire ● |
| 2:7 | 218-578 | 2 | Fuse-Blade, 10 Amp |
| 2:8 | 109101 | 1 | Fuse-Blade, 20 Amp |
| 2:10 | 92-3188 | 2 | Diode-Board, Circuit |
| 2:20 | 100-4918 | 2 | Diode |
| 3 | 108-9455 | 1 | Harness-Wire, Fusible Link |

● Not serviced separately

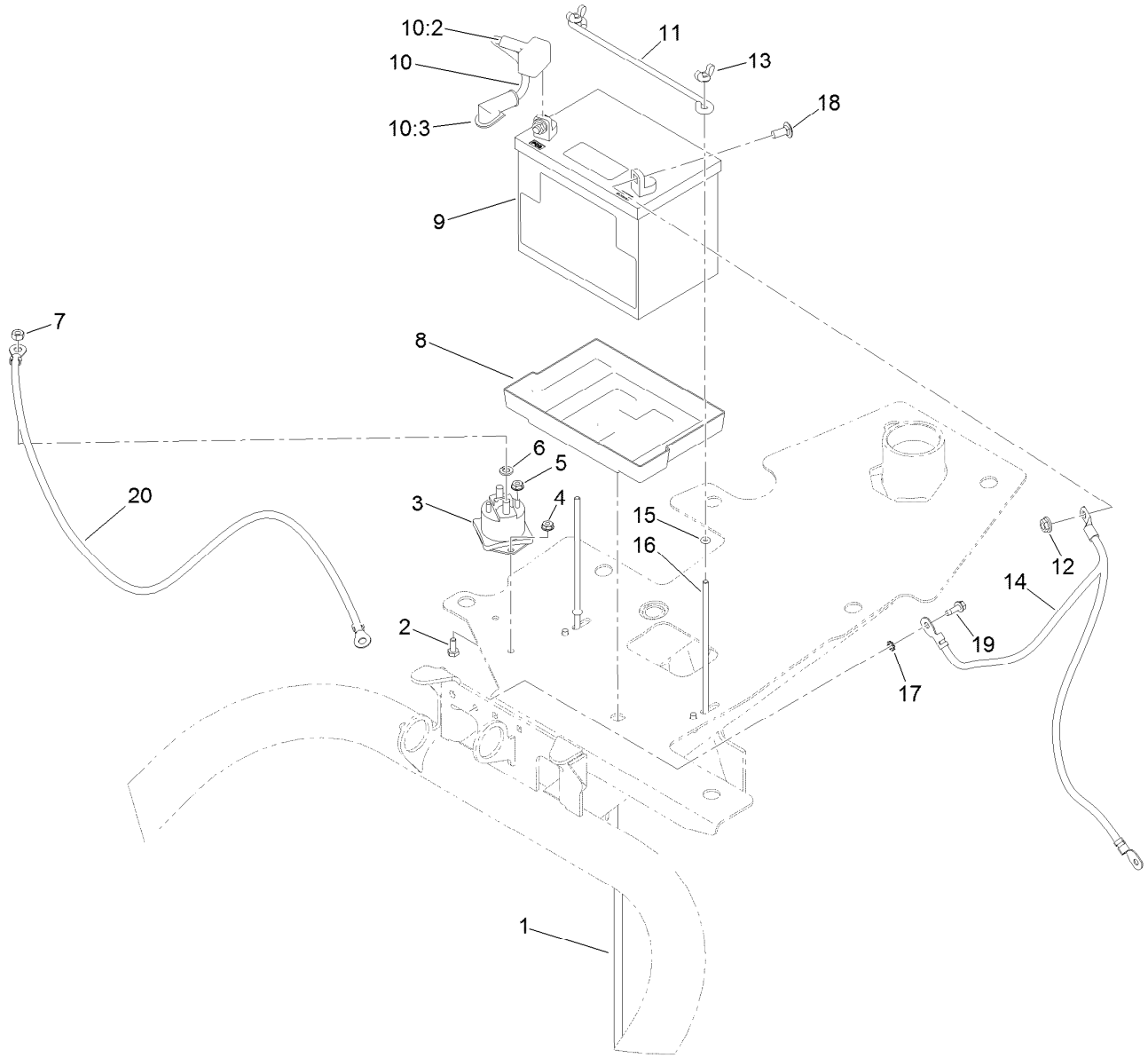


# Battery Assembly

| Ref. | Part Number | Qty. | Description |
|---|---|---|---|
| 1 | 104-2061 | 1 | Tube-Drain, Battery |
| 2 | 321-3 | 2 | Screw-HH |
| 3 | 28-4210 | 1 | Solenoid |
| 4 | 32149-2 | 2 | Nut-Keps |
| 5 | 32149-8 | 2 | Nut-Keps |
| 6 | 3253-4 | 2 | Washer-Lock |
| 7 | 3218-13 | 2 | Nut-Jam, Brass |
| 8 | 106948 | 1 | Tray-Battery |
| 9 | 99-7421 | 1 | Battery |
| 10 | 83-2420 | 1 | Positive Cable ASM |
| 10:2 | 28-8080 | 1 | Boot-Terminal |

| Ref. | Part Number | Qty. | Description |
|---|---|---|---|
| 10:3 | 83-2430 | 1 | Boot-Terminal |
| 11 | 100-6434 | 1 | Rod-Hold Down, Battery |
| 12 | 32128-20 | 2 | Nut-HF |
| 13 | 32103-22 | 2 | Nut-Wing |
| 14 | 122-0370 | 1 | Cable-Battery, Negative |
| 15 | 237-143 | 2 | O-Ring |
| 16 | 100-6435 | 2 | Post-Battery |
| 17 | 3255-7 | 1 | Washer-Lock/EXT |
| 18 | 3230-23 | 2 | Bolt-CARR |
| 19 | 32104-95 | 1 | Screw-HWH |
| 20 | 98-2161 | 1 | Cable-Battery, Positive |

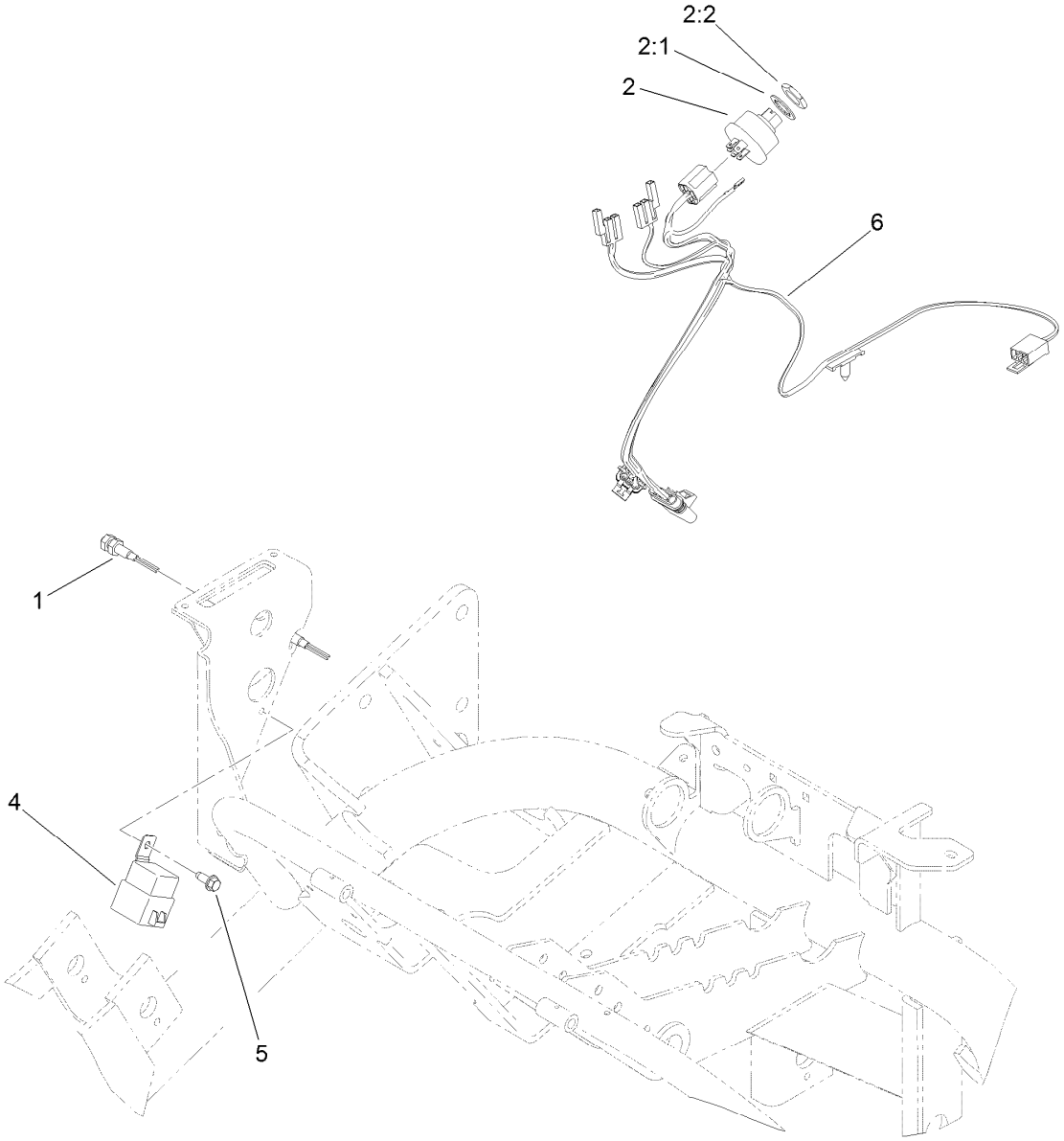


# Ignition and Reed Switch Assembly

| *Ref.* | *Part Number* | *Qty.* | *Description* |
|---|---|---|---|
| 1 | 112-0278 | 2 | Switch-Reed |
| 2 | 104-2541 | 1 | Ignition Switch ASM |
| 2:1 | 218-461 | 1 | Nut-HH |
| 2:2 | 3254-5 | 1 | Washer-Lock |
| 4 | 99-7430 | 1 | Relay-Mini |
| 5 | 32144-10 | 1 | Screw-HWH |
| 6 | 108-9466 | 1 | Harness-Wire, Seat |

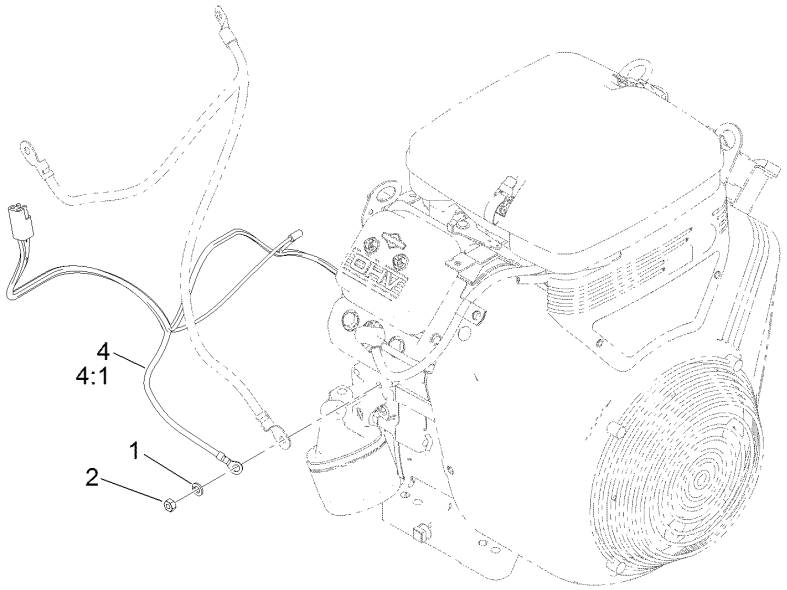


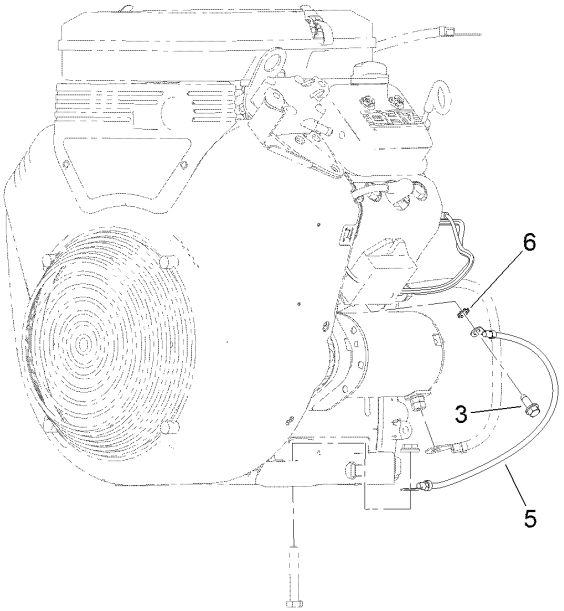


# Engine Wire Harness Assembly

| *Ref.* | *Part Number* | *Qty.* | *Description* |
|---|---|---|---|
| 1 | 3253-3 | 1 | Washer-Lock |
| 2 | 43-2830 | 1 | Nut-Hex |
| 3 | 32144-10 | 1 | Screw-HWH |
| 4 | 105-8276 | 1 | Harness-Wire, Engine |
| 4:1 | 106-4642 | 1 | Harness-Wire, Fusible Link |
| 5 | 108-6486 | 1 | Wire-Ground |
| 6 | 3255-7 | 1 | Washer-Lock/EXT |

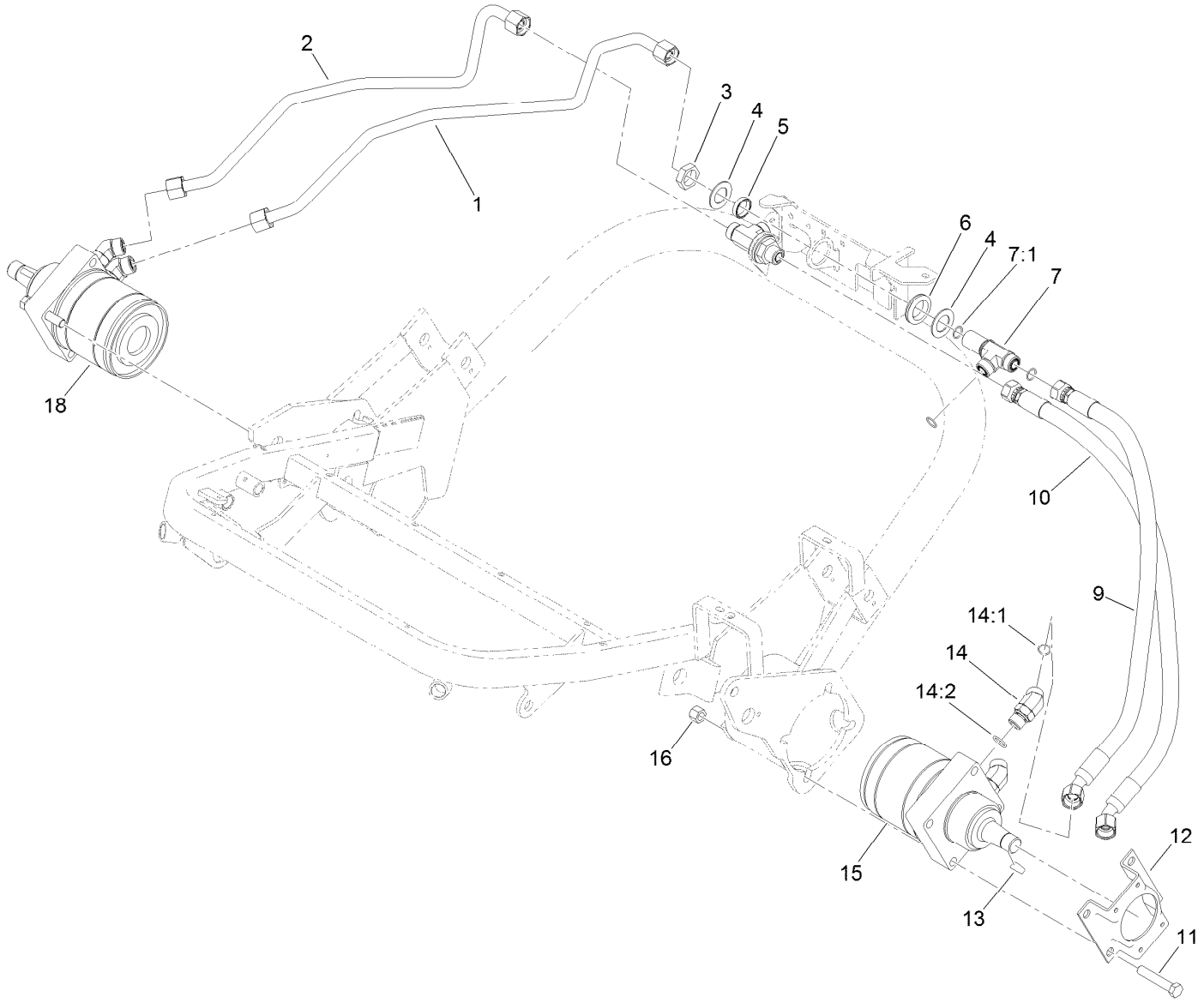


# Ground Drive Assembly

| Ref. | Part Number | Qty. | Description |
|---|---|---|---|
| 1 | 112-0204 | 1 | Tube-HYD |
| 2 | 112-0203 | 1 | Tube-HYD |
| 3 | 340-74 | 2 | Nut-Lock, Bulkhead |
| 4 | 69-9010 | 4 | Washer |
| 5 | 125-1984 | 2 | Spacer |
| 6 | 240-3 | 2 | Grommet-Rubber |
| 7 | 94-5350 | 2 | Fitting-Tee |
| 7:1 | 237-65 | 3 | O-Ring |
| 9 | 138-4975 | 1 | Hose ASM-HYD HP |
| 10 | 105-4333 | 1 | Hose-HYD |

| Ref. | Part Number | Qty. | Description |
|---|---|---|---|
| 11 | 325-11 | 8 | Screw-HH |
| 12 | 84-2000-0P | 2 | Bracket-Brake |
| 13 | 3257-42 | 2 | Key-Woodruff |
| 14 | 340-14 | 4 | Fitting-HYD, 45 DEG |
| 14:1 | 237-65 | 1 | O-Ring |
| 14:2 | 237-80 | 1 | O-Ring |
| 15 | 110-4015 | 1 | HYD Motor ASM (CCW) |
| 16 | 3296-23 | 8 | Nut-Lock, NI |
| 18 | 110-4016 | 1 | HYD Motor ASM (CW) |

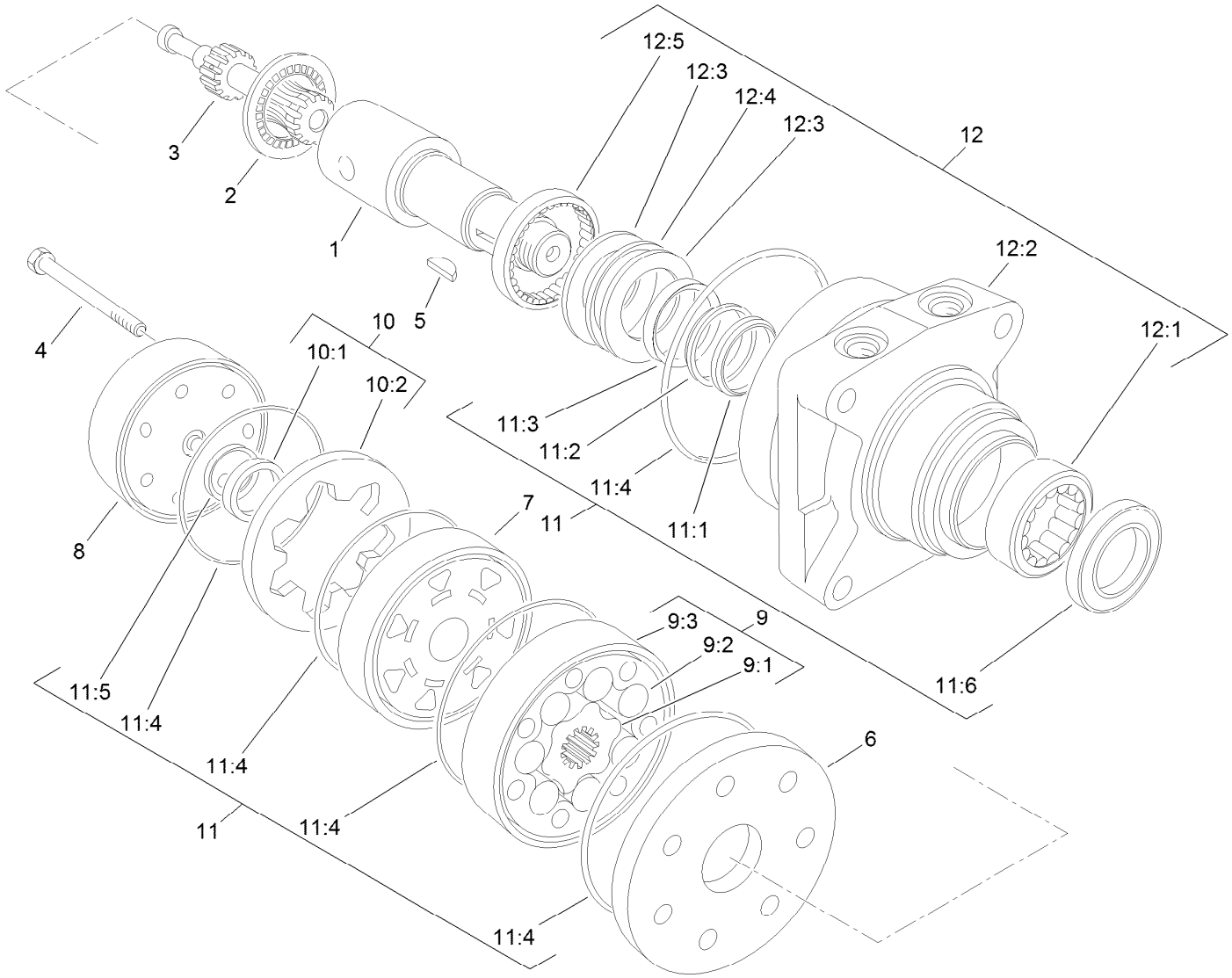


# Hydraulic Motor Assembly (CW) No. 110-4016

| Ref. | Part Number | Qty. | Description |
|---|---|---|---|
| 1 | 76-0860 | 1 | Shaft-Coupling |
| 2 | 76-0850 | 1 | Bearing-Thrust |
| 3 | 92-9761 | 1 | Link-Drive |
| 4 | 92-9762 | 7 | Screw-HH |
| 5 | 3257-42 | 1 | Key-Woodruff |
| 6 | 92-9754 | 1 | Plate-Wear |
| 7 | 76-0840 | 1 | Manifold |
| 8 | 76-0940 | 1 | End Cover ASM |
| 9 | 92-9763 | 1 | Rotor Set |
| 9:1 | | 1 | Rotor ● |
| 9:2 | | 1 | Vane ● |
| 9:3 | | 1 | Stator ● |
| 10 | 76-0880 | 1 | Commutator ASM |
| 10:1 | | 1 | Commutator ● |

| Ref. | Part Number | Qty. | Description |
|---|---|---|---|
| 10:2 | | 1 | Ring-Commutator ● |
| 11 | 100-6131 | 1 | Seal Kit |
| 11:1 | | 1 | Ring-Back Up ● |
| 11:2 | | 1 | Washer-Back Up ● |
| 11:3 | | 1 | Seal-Shaft ● |
| 11:4 | | 5 | Seal-Ring ● |
| 11:5 | | 1 | Seal-Commutator ● |
| 11:6 | | 1 | Seal-Dirt And Water ● |
| 12 | 76-0810 | 1 | Housing ASM |
| 12:1 | | 1 | Bearing ● |
| 12:2 | | 1 | Housing ● |
| 12:3 | | 2 | Washer-Thrust ● |
| 12:4 | | 1 | Bearing-Thrust ● |
| 12:5 | | 1 | Bearing ● |

● Not serviced separately

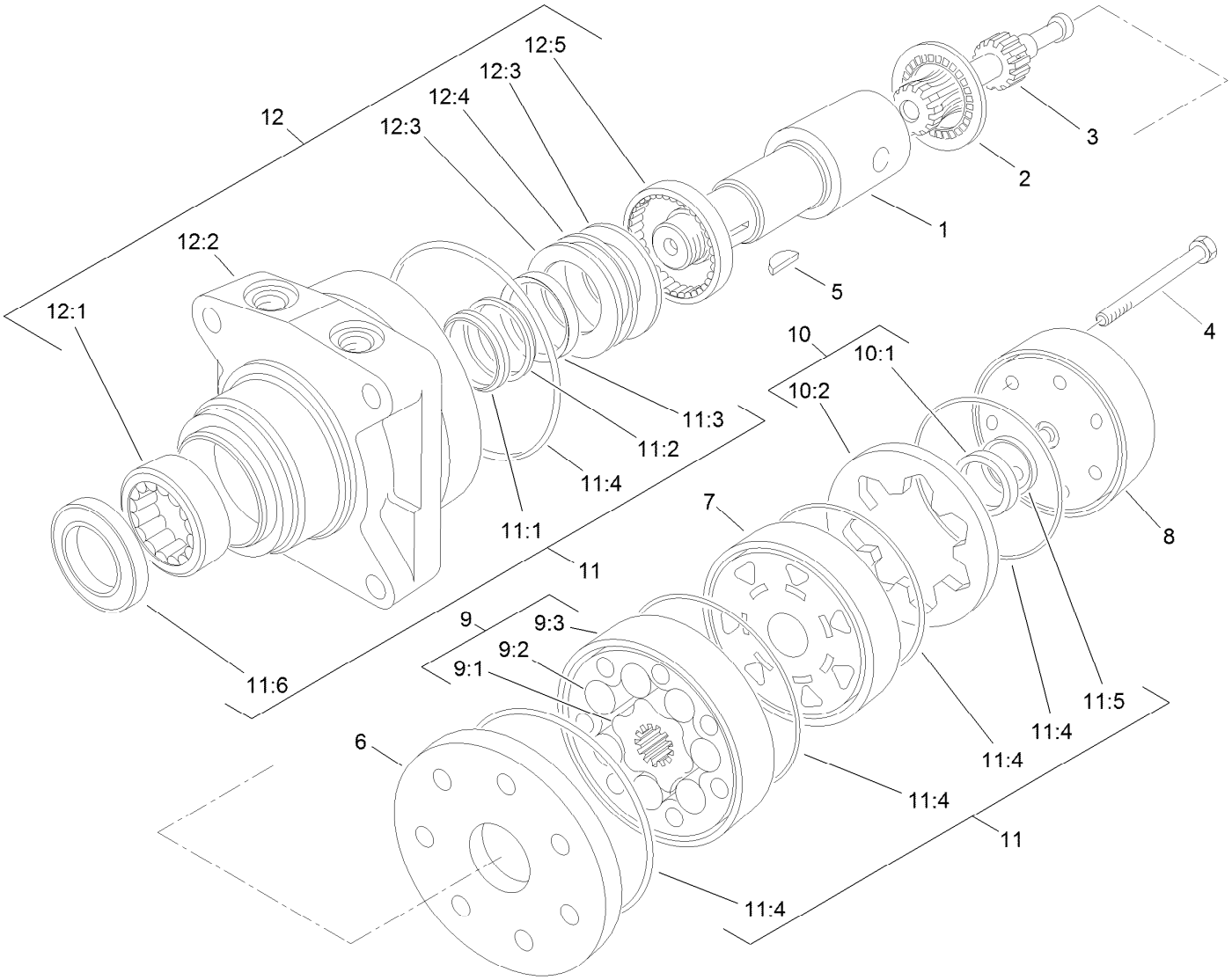


# Hydraulic Motor Assembly (CCW) No. 110-4015

| Ref. | Part Number | Qty. | Description |
|---|---|---|---|
| 1 | 76-0860 | 1 | Shaft-Coupling |
| 2 | 76-0850 | 1 | Bearing-Thrust |
| 3 | 92-9761 | 1 | Link-Drive |
| 4 | 92-9762 | 7 | Screw-HH |
| 5 | 3257-42 | 1 | Key-Woodruff |
| 6 | 92-9754 | 1 | Plate-Wear |
| 7 | 76-0840 | 1 | Manifold |
| 8 | 76-0940 | 1 | End Cover ASM |
| 9 | 92-9763 | 1 | Rotor Set |
| 9:1 | | 1 | Rotor ● |
| 9:2 | | 1 | Vane ● |
| 9:3 | | 1 | Stator ● |
| 10 | 76-0880 | 1 | Commutator ASM |
| 10:1 | | 1 | Commutator ● |

| Ref. | Part Number | Qty. | Description |
|---|---|---|---|
| 10:2 | | 1 | Ring-Commutator ● |
| 11 | 100-6131 | 1 | Seal Kit |
| 11:1 | | 1 | Ring-Back Up ● |
| 11:2 | | 1 | Washer-Back Up ● |
| 11:3 | | 1 | Seal-Shaft ● |
| 11:4 | | 5 | Seal-Ring ● |
| 11:5 | | 1 | Seal-Commutator ● |
| 11:6 | | 1 | Seal-Dirt And Water ● |
| 12 | 76-0810 | 1 | Housing ASM |
| 12:1 | | 1 | Bearing ● |
| 12:2 | | 1 | Housing ● |
| 12:3 | | 2 | Washer-Thrust ● |
| 12:4 | | 1 | Bearing-Thrust ● |
| 12:5 | | 1 | Bearing ● |

● Not serviced separately

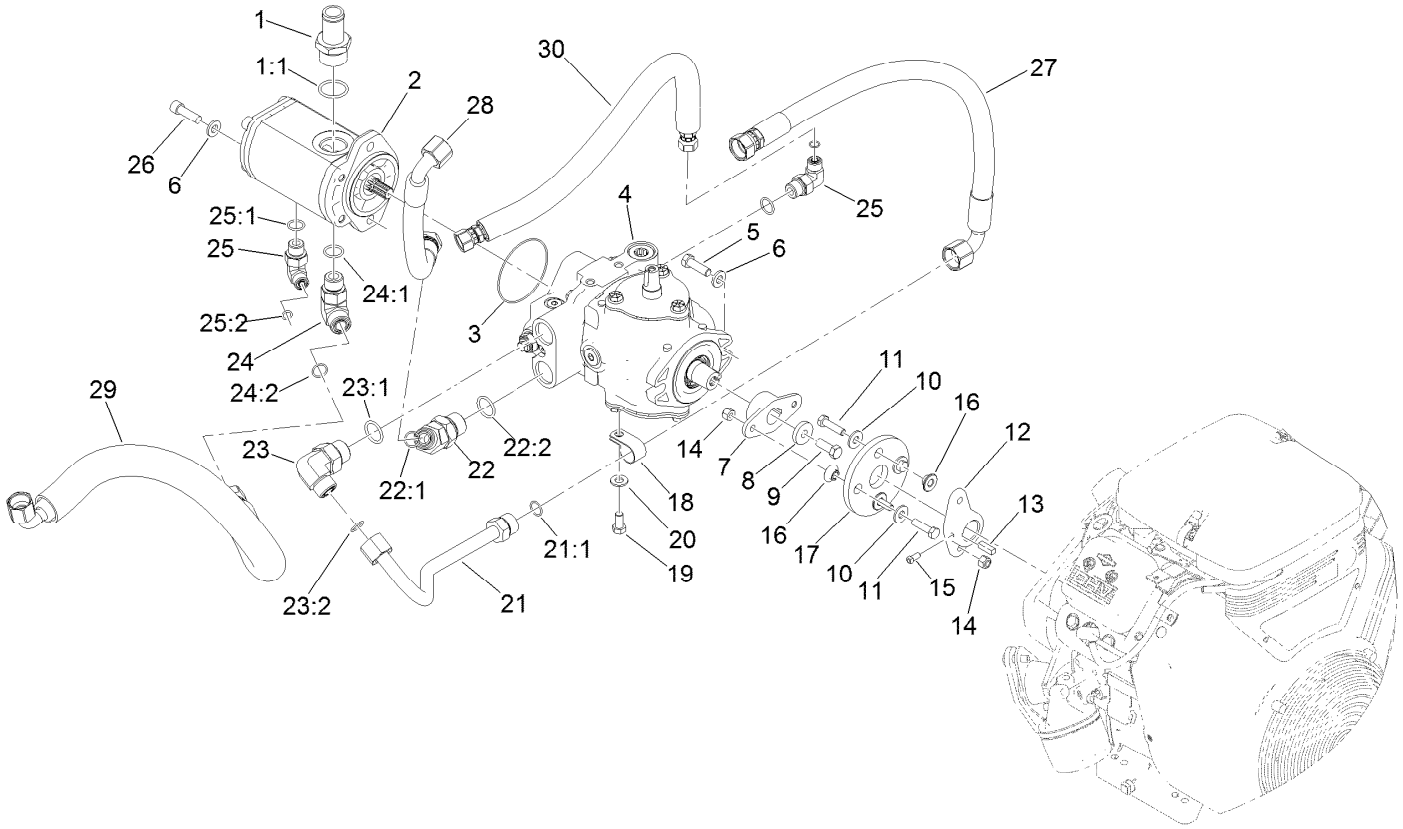


# Hydrostat and Gear Pump Drive Assembly

| Ref. | Part Number | Qty. | Description |
|---|---|---|---|
| 1 | 354-78 | 1 | Fitting-STR |
| 1:1 | 237-146 | 1 | O-Ring |
| 2 | 114-9956 | 1 | HYD Gear Pump ASM |
| 3 | 353-949 | 1 | O-Ring |
| 4 | 121-9557 | 1 | Pump-Hydro |
| 5 | 323-7 | 2 | Screw-HH |
| 6 | 100-4852 | 4 | Washer-Hardened |
| 7 | 119-4485 | 1 | Hub-Pump |
| 8 | 138-8594 | 1 | Spacer |
| 9 | 3211-4 | 1 | Screw-HH |
| 10 | 3256-3 | 4 | Washer-Flat |
| 11 | 322-6 | 4 | Screw-HH |
| 12 | 110-5236 | 1 | Hub-Engine |
| 13 | 10-7070 | 1 | Key-Square |
| 14 | 3296-29 | 4 | Nut-Lock, NI |
| 15 | 3241-7 | 2 | Screw-SQH |
| 16 | 125-9249 | 4 | Spacer-Coupler, Rubber |
| 17 | 115-4523 | 1 | Coupling-Rubber |
| 18 | 2412-41 | 1 | Clamp-R |
| 19 | 323-4 | 1 | Screw-HH |

| Ref. | Part Number | Qty. | Description |
|---|---|---|---|
| 20 | 3256-24 | 1 | Washer-Flat |
| 21 | 121-2561 | 1 | Tube-HYD |
| 21:1 | 237-65 | 1 | O-Ring |
| 22 | 340-156 | 1 | Fitting-Elbow 45 |
| 22:1 | 237-65 | 1 | O-Ring |
| 22:2 | 237-81 | 1 | O-Ring |
| 23 | 340-139 | 1 | Fitting-Elbow 90 |
| 23:1 | 237-81 | 1 | O-Ring |
| 23:2 | 237-65 | 1 | O-Ring |
| 24 | 340-17 | 1 | Fitting-Elbow, 90 DEG |
| 24:1 | 237-65 | 1 | O-Ring |
| 24:2 | 237-80 | 1 | O-Ring |
| 25 | 340-18 | 2 | Fitting-HYD, 90 DEG |
| 25:1 | 237-79 | 1 | O-Ring |
| 25:2 | 237-22 | 1 | O-Ring |
| 26 | 3274-1 | 2 | Screw-HSH |
| 27 | 99-6193 | 1 | Hose ASM |
| 28 | 105-4332 | 1 | Hose-HYD |
| 29 | 131-2042 | 1 | Hose-HYD |
| 30 | 131-2041 | 1 | Hose ASM |

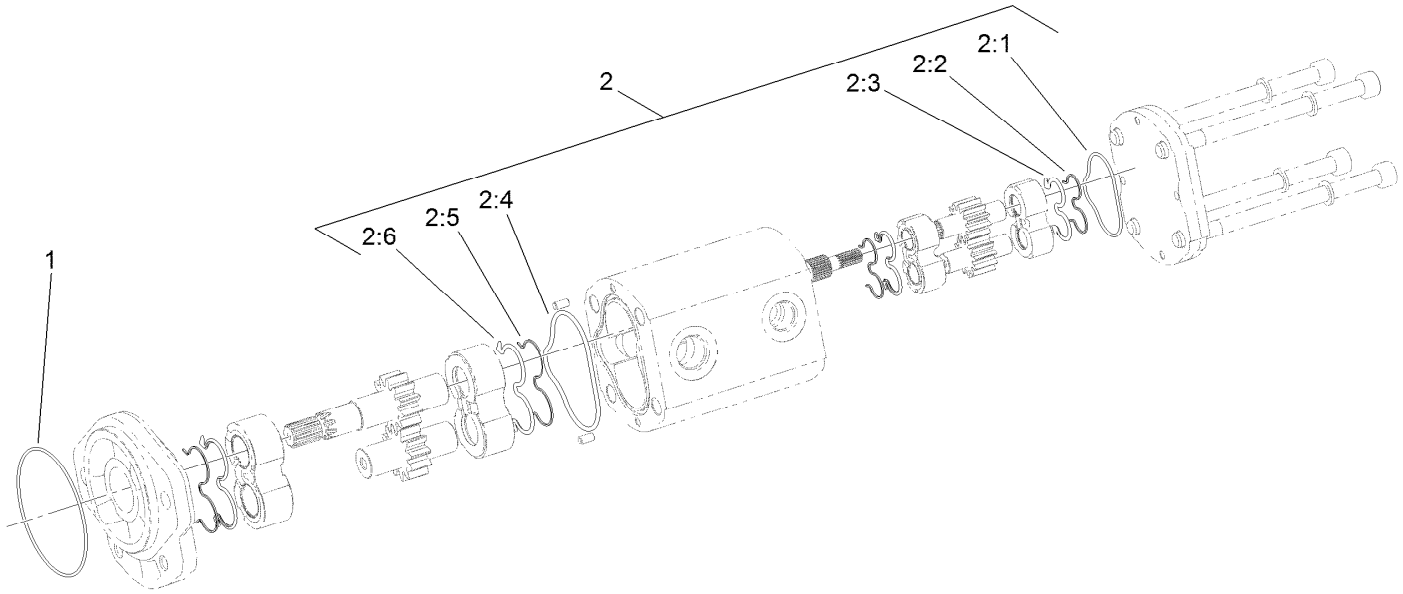


# Hydraulic Gear Pump Assembly No. 114-9956

| *Ref.* | *Part Number* | *Qty.* | *Description* |
|---|---|---|---|
| 1 | 353-949 | 1 | O-Ring |
| 2 | 119-7134 | 1 | Kit-Seal |
| 2:1 | | 1 | O-Ring ● |
| 2:2 | | 2 | Seal-Extrusion, Anti ● |
| 2:3 | | 2 | Seal-Backup ● |
| 2:4 | | 1 | O-Ring ● |
| 2:5 | | 2 | Seal-Extrusion, Anti ● |
| 2:6 | | 2 | Seal-Backup ● |

● Not serviced separately

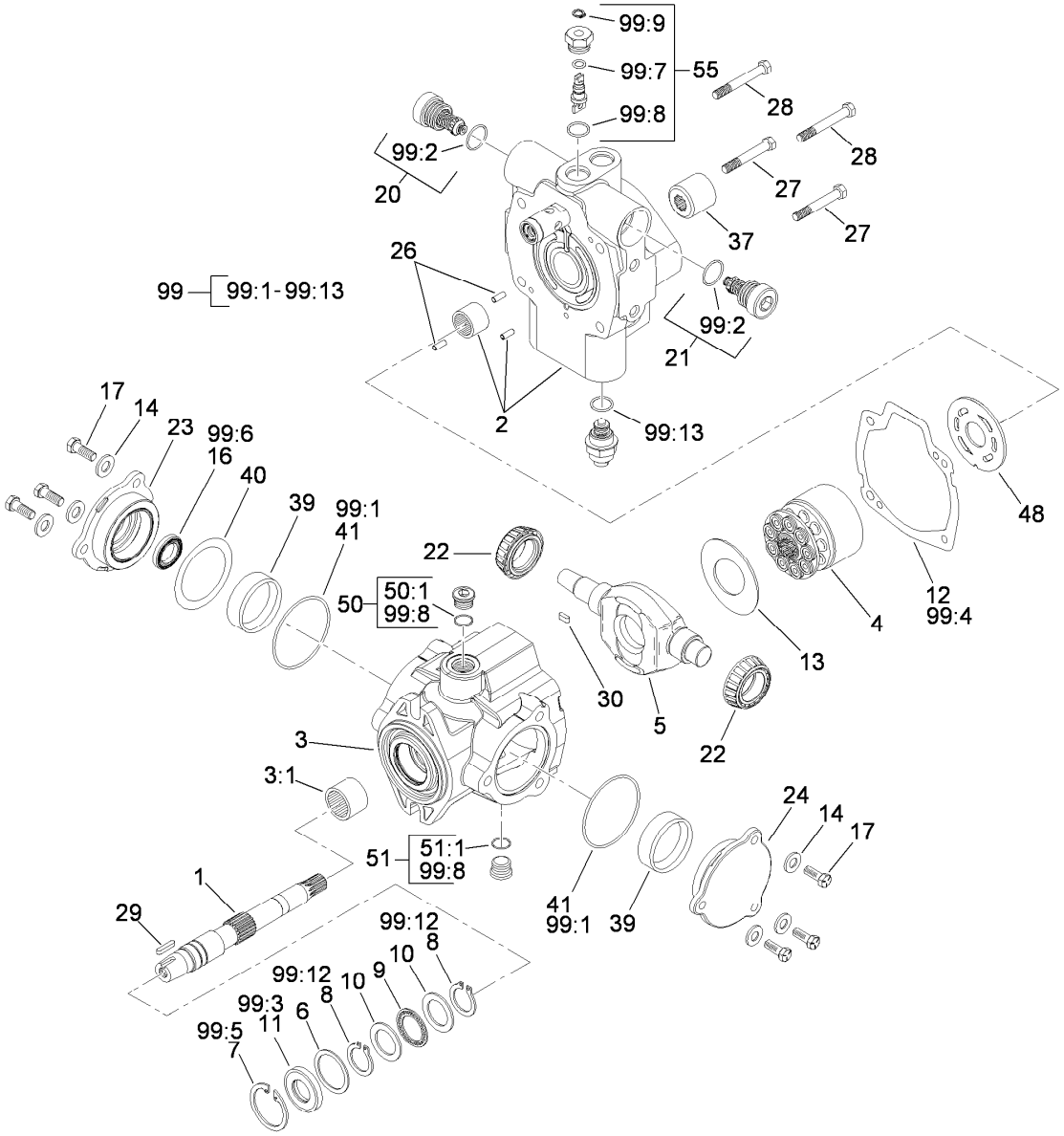


# Hydraulic Pump Assembly No. 121-9557

| Ref. | Part Number | Qty. | Description |
|---|---|---|---|
| 1 | 119-7148 | 1 | Shaft-Drive, Tapered |
| 2 | 121-9574 | 1 | Endcover ASM |
| 3 | 100-3176 | 1 | Housing ASM |
| 3:1 | 94-6363 | 1 | Bearing |
| 4 | 76-6070 | 1 | Rotating Kit |
| 5 | 100-3175 | 1 | Camplate |
| 6 | 33-3720 | 1 | Washer |
| 7 | 32151-13 | 1 | Ring-Retaining |
| 8 | 32151-29 | 2 | Ring-Retaining |
| 9 | 252-66 | 1 | Bearing-Thrust |
| 10 | 252-71 | 2 | Washer-Thrust |
| 11 | 104-4861 | 1 | Seal-Shaft |
| 12 | 33-4930 | 1 | Gasket-Housing |
| 13 | 98-4635 | 1 | Insert-Plate, Cam |
| 14 | 105-9762 | 6 | Washer |
| 16 | 76-6190 | 1 | Seal-Shaft |
| 17 | 98-4640 | 6 | Screw-Cap |
| 20 | 120-1989 | 1 | Relief Valve ASM |

| Ref. | Part Number | Qty. | Description |
|---|---|---|---|
| 21 | 120-1989 | 1 | Relief Valve ASM |
| 22 | 98-4639 | 2 | Bearing-Cone |
| 23 | 98-4645 | 1 | Plate-Cover |
| 24 | 98-4644 | 1 | Plate-Cover |
| 26 | 76-6150 | 2 | Pin-Dowel |
| 27 | 76-6160 | 2 | Capscrew |
| 28 | 76-6170 | 2 | Capscrew |
| 29 | 120-5751 | 1 | Key |
| 30 | 94-3646 | 1 | Key |
| 37 | 74-9040 | 1 | Coupler |
| 39 | 104-4046 | 2 | Bearing-Cup |
| 40 | 100-3182 | 1 | Shim Kit |
| 41 | 100-3179 | 2 | O-Ring |
| 48 | 100-3180 | 1 | Plate-Valve |
| 50 | 74-9280 | 1 | Plug ASM |
| 50:1 | | 1 | O-Ring ■ |
| 51 | 74-9280 | 1 | Plug ASM |
| 51:1 | | 1 | O-Ring ■ |

● Not illustrated

■ Not serviced separately

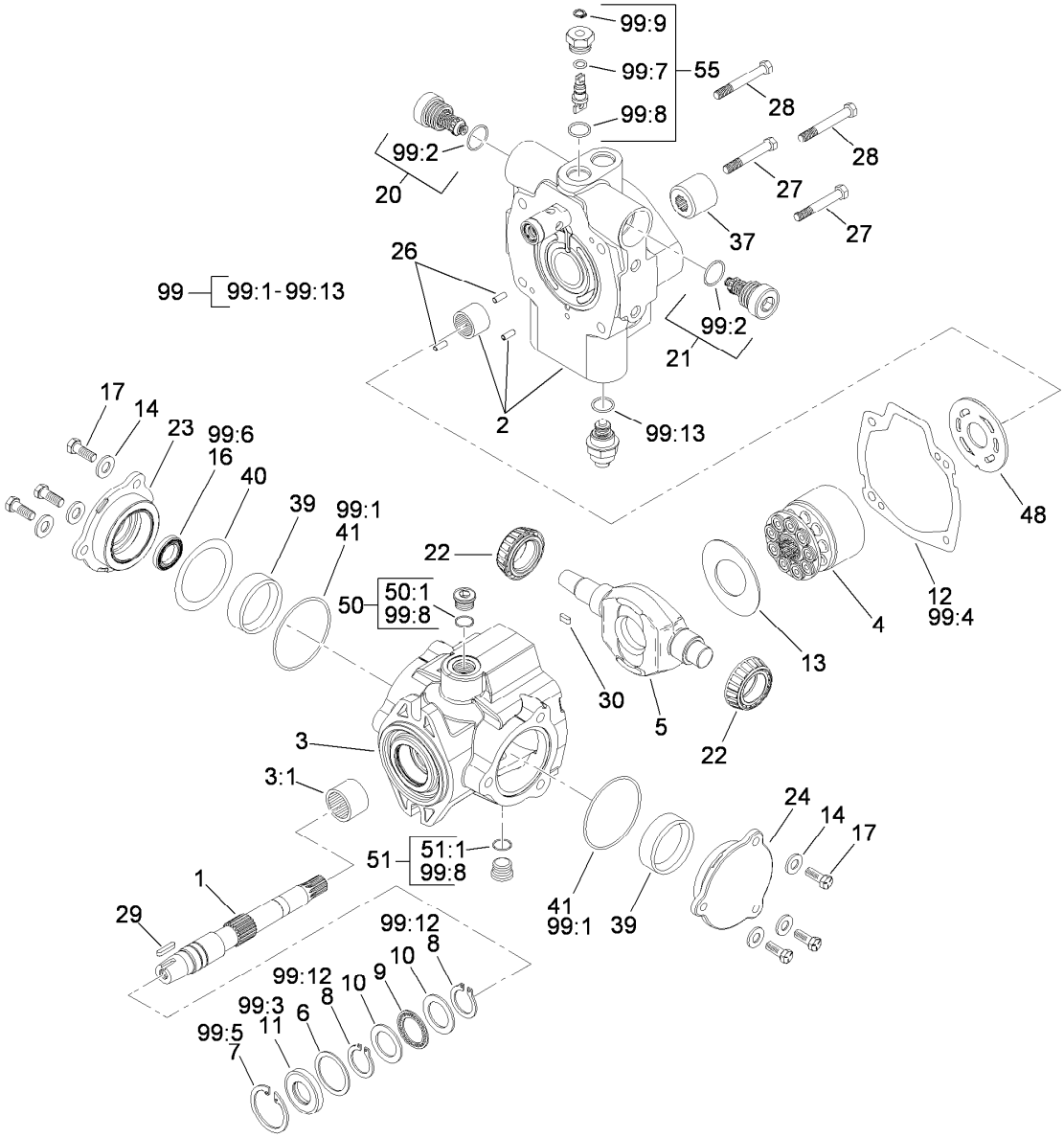


# Hydraulic Pump Assembly No. 121-9557 (continued)

| Ref. | Part Number | Qty. | Description |
|---|---|---|---|
| 55 | 105-3811 | 1 | Valve-Bypass |
| 99 | 120-5754 | 1 | Seal Kit |
| 99:1 | | 2 | O-Ring ■ |
| 99:2 | | 2 | O-Ring ■ |
| 99:3 | | 1 | Seal-Shaft ■ |
| 99:4 | | 1 | Gasket ■ |
| 99:5 | | 1 | Ring-Retaining ■ |
| 99:6 | | 1 | Seal-Shaft ■ |

| Ref. | Part Number | Qty. | Description |
|---|---|---|---|
| 99:7 | | 1 | O-Ring ■ |
| 99:8 | | 5 | O-Ring ■ |
| 99:9 | | 1 | Ring-Retaining ■ |
| 99:10 | | 1 | O-Ring ● ■ |
| 99:11 | | 1 | O Ring-Molded ● ■ |
| 99:12 | | 2 | Ring-Retaining ■ |
| 99:13 | | 1 | O-Ring ● ■ |

● Not illustrated

■ Not serviced separately

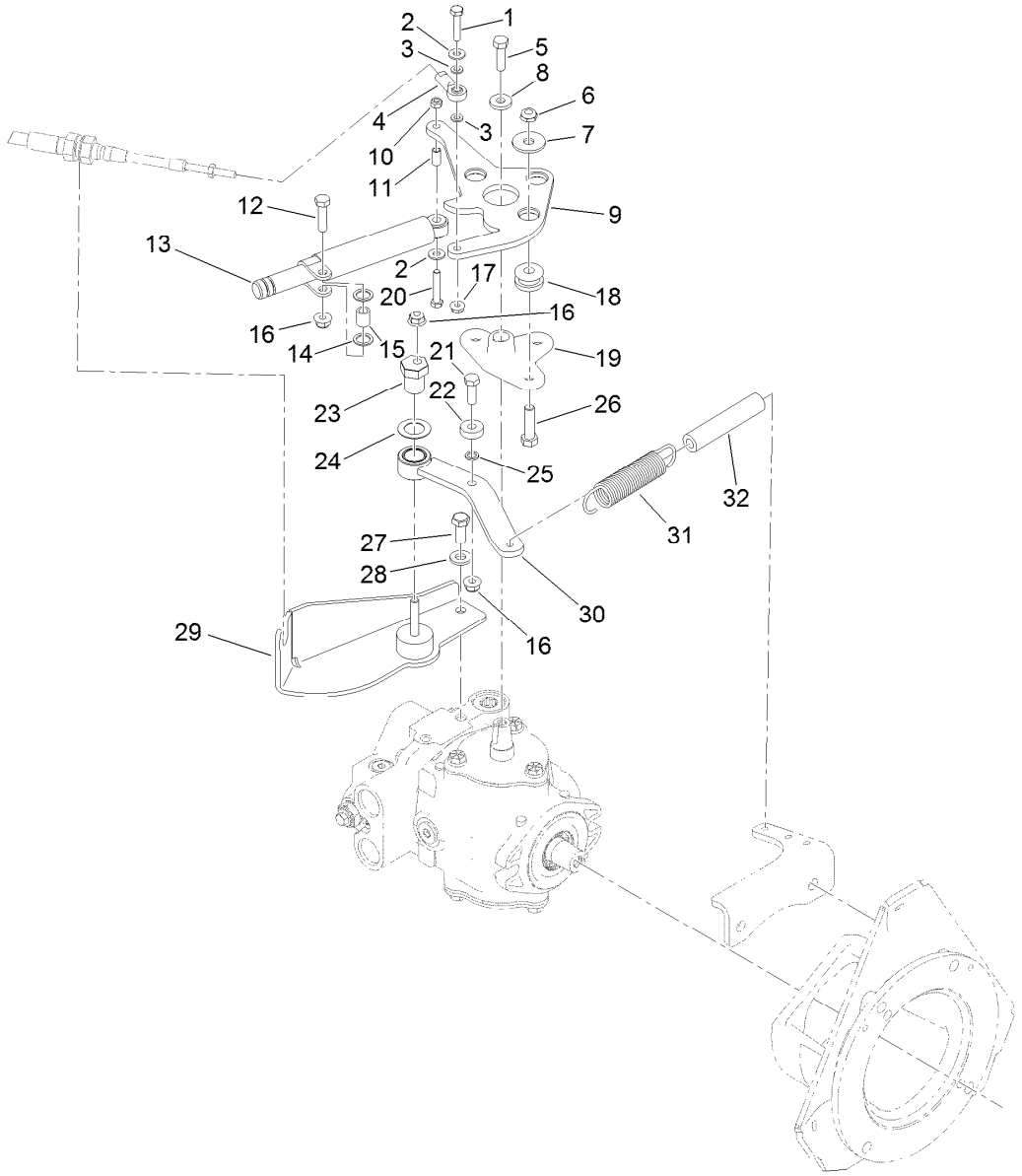


# Neutral System Assembly

| Ref. | Part Number | Qty. | Description |
|---|---|---|---|
| 1 | 321-8 | 1 | Screw-HH |
| 2 | 3256-22 | 2 | Washer-Flat |
| 3 | 33093-00 | 2 | Washer-Flat |
| 4 | 2411-41 | 1 | Rod End-Ball Joint |
| 5 | 3210-6 | 1 | Screw-HH |
| 6 | 3296-59 | 3 | Nut-Lock, NI |
| 7 | 93-8806 | 3 | Washer-Hardened |
| 8 | 88-7200 | 1 | Washer-Flat |
| 9 | 105-5477-03 | 1 | Lever-Pump |
| 10 | 33023-00 | 1 | Nut-Lock |
| 11 | 94-1312 | 1 | Spacer-Pivot |
| 12 | 322-6 | 1 | Screw-HH |
| 13 | 76-8870 | 1 | Damper-Lever |
| 14 | 94-8196 | 2 | Washer-Nylon |
| 15 | 94-8197 | 1 | Tube-Pivot |
| 16 | 104-8300 | 3 | Nut-HF, NI |

| Ref. | Part Number | Qty. | Description |
|---|---|---|---|
| 17 | 104-7201 | 1 | Nut-HF, NI |
| 18 | 63-9750 | 3 | Mount |
| 19 | 117-9500 | 1 | Plate-Pivot |
| 20 | 33113-035 | 1 | Screw-HH |
| 21 | 322-5 | 1 | Screw-HH |
| 22 | 251-259 | 1 | Bearing-Ball |
| 23 | 93-2111 | 1 | Stud-Traction |
| 24 | 3-6498 | 1 | Washer-Thrust |
| 25 | 75-5470 | 1 | Spacer-Bearing |
| 26 | 323-29 | 3 | Screw-HH |
| 27 | 323-5 | 2 | Screw-HH |
| 28 | 100-4852 | 2 | Washer-Hardened |
| 29 | 105-5475 | 1 | Cable Support ASM |
| 30 | 144-5749 | 1 | Neutral Arm ASM |
| 31 | 94-1369 | 1 | Spring-Extension |
| 32 | 99-4251 | 1 | Hose-Dampener |

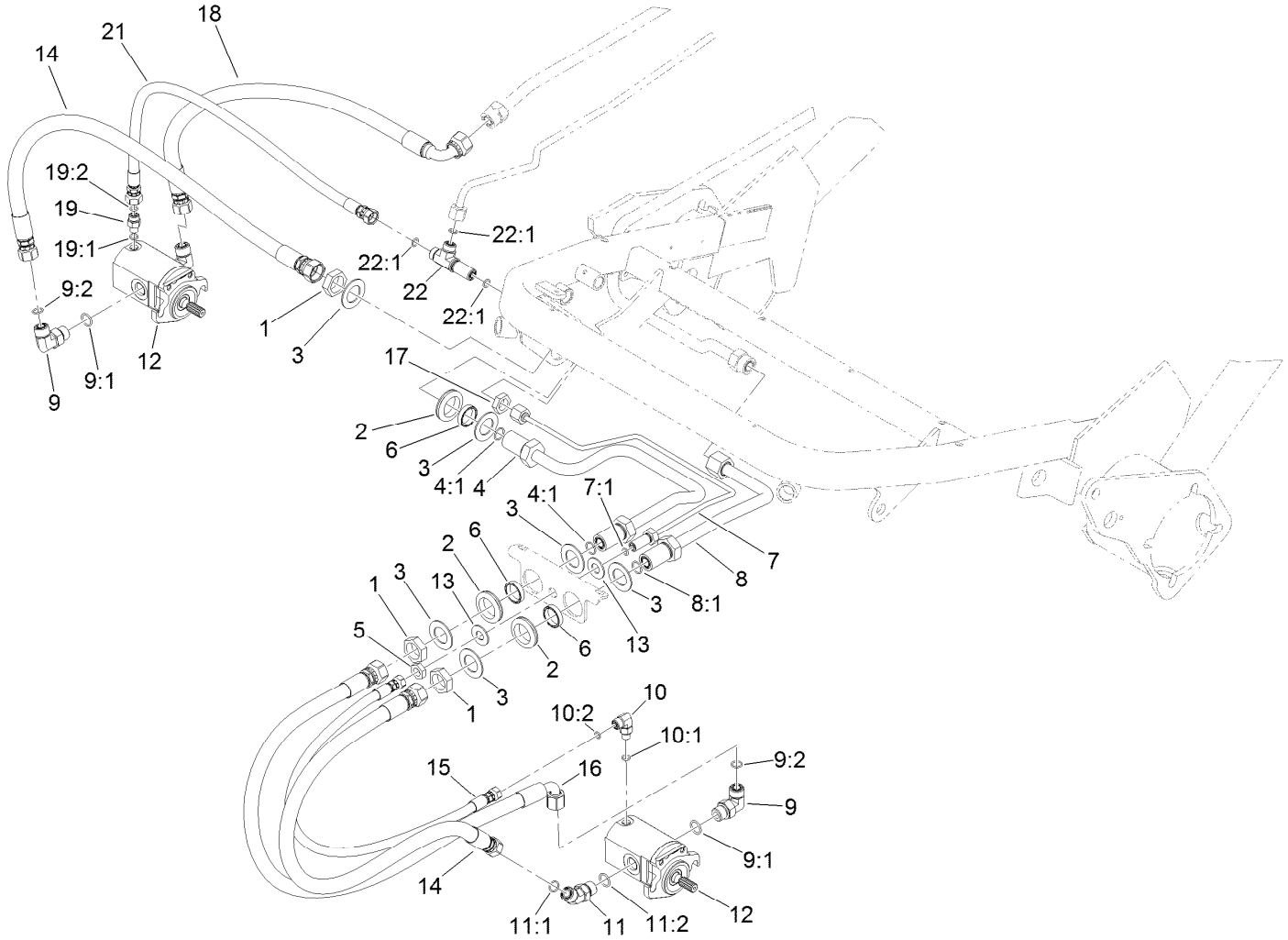


# Front Hydraulic Reel Drive and Hose Assembly

| Ref. | Part Number | Qty. | Description |
|---|---|---|---|
| 1 | 340-74 | 3 | Nut-Lock, Bulkhead |
| 2 | 240-3 | 3 | Grommet-Rubber |
| 3 | 69-9010 | 6 | Washer |
| 4 | 107-2580 | 1 | Tube-HYD |
| 4:1 | 237-65 | 2 | O-Ring |
| 5 | 340-78 | 1 | Nut-Lock |
| 6 | 125-1984 | 3 | Spacer |
| 7 | 127-2227 | 1 | Tube-HYD |
| 7:1 | 237-21 | 1 | O-Ring |
| 8 | 107-2581 | 1 | Tube-HYD |
| 8:1 | 237-65 | 1 | O-Ring |
| 9 | 340-98 | 3 | Fitting-Elbow, 90 DEG |
| 9:1 | 237-79 | 1 | O-Ring |
| 9:2 | 237-30 | 1 | O-Ring |
| 10 | 340-132 | 1 | Fitting-Elbow, 90 DEG |
| 10:1 | 237-78 | 1 | O-Ring |
| 10:2 | 237-21 | 1 | O-Ring |

| Ref. | Part Number | Qty. | Description |
|---|---|---|---|
| 11 | 340-101 | 1 | Fitting-HYD, 45 DEG |
| 11:1 | 237-30 | 1 | O-Ring |
| 11:2 | 237-79 | 1 | O-Ring |
| 12 | 120-2072 | 2 | HYD Motor ASM |
| 13 | 69-8980 | 2 | Washer |
| 14 | 139-6529 | 2 | Hose ASM |
| 15 | 106-9674 | 1 | Hose-HYD |
| 16 | 139-6530 | 1 | Hose ASM |
| 17 | 340-70 | 1 | Nut-Lock |
| 18 | 139-6532 | 1 | Hose ASM |
| 19 | 340-92 | 1 | Fitting-Straight |
| 19:1 | 237-78 | 1 | O-Ring |
| 19:2 | 237-21 | 1 | O-Ring |
| 21 | 105-5405 | 1 | Hose-HYD |
| 22 | 340-68 | 1 | Fitting-Tee, Bulkhead |
| 22:1 | 237-22 | 3 | O-Ring |

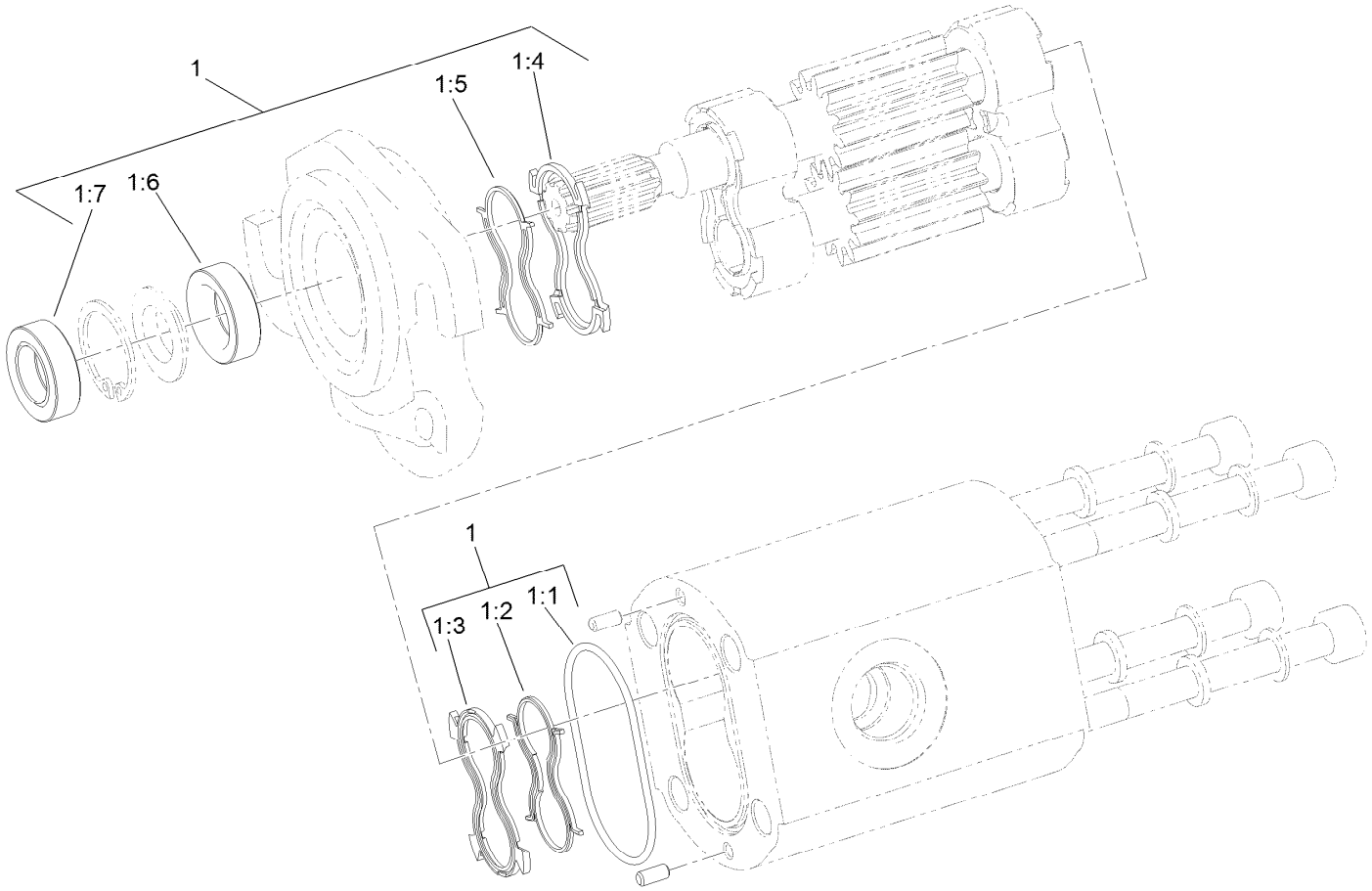


# Hydraulic Reel Motor Assembly No. 120-2072

| *Ref.* | *Part Number* | *Qty.* | *Description* |
|---|---|---|---|
| 1 | 119-7113 | 1 | Seal Kit |
| 1:1 | | 1 | O-Ring Housing ● |
| 1:2 | | 1 | Seal-Anti Extrusion ● |
| 1:3 | | 1 | Seal-Plate, Balancing ● |
| 1:4 | | 1 | Seal-Plate, Balancing ● |
| 1:5 | | 1 | Seal-Anti Extrusion ● |
| 1:6 | | 1 | Seal-Shaft (Inboard) ● |
| 1:7 | | 1 | Seal-Shaft (Outboard) ● |

● Not serviced separately

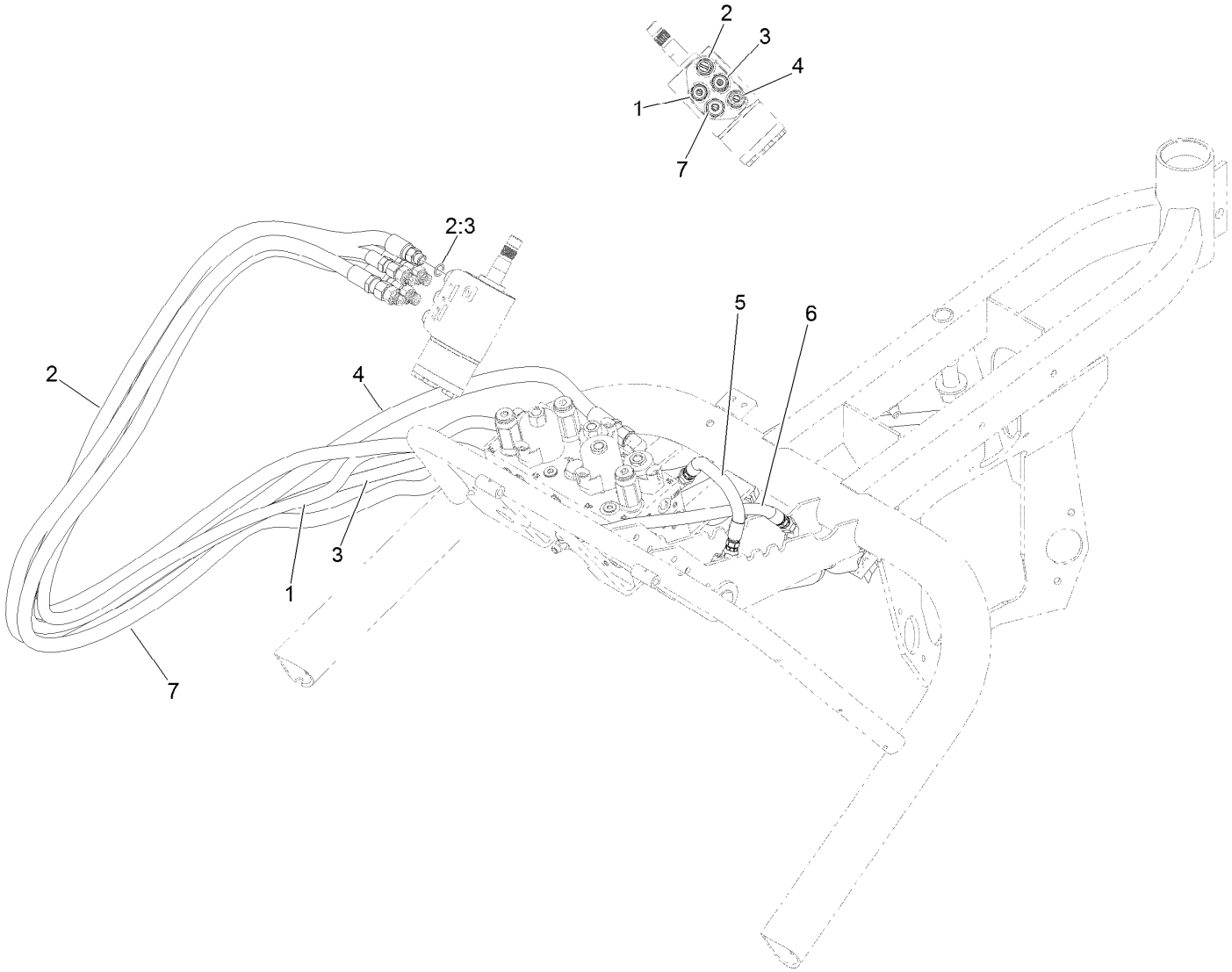


# Hydraulic Steering Hose and Center Lift Cylinder Hose Assembly

| *Ref.* | *Part Number* | *Qty.* | *Description* |
|---|---|---|---|
| 1 | 100-4892 | 1 | Hose-HYD |
| 2 | 131-2043 | 1 | Hose-HYD |
| 2:3 | 237-42 | 1 | O-Ring |
| 3 | 105-4337 | 1 | Hose-HYD |
| 4 | 105-4339 | 1 | Hose-HYD |
| 5 | 131-2040 | 1 | Hose-HYD |
| 6 | 130-6545 | 1 | Hose-HYD |
| 7 | 131-2044 | 1 | Hose-HYD |

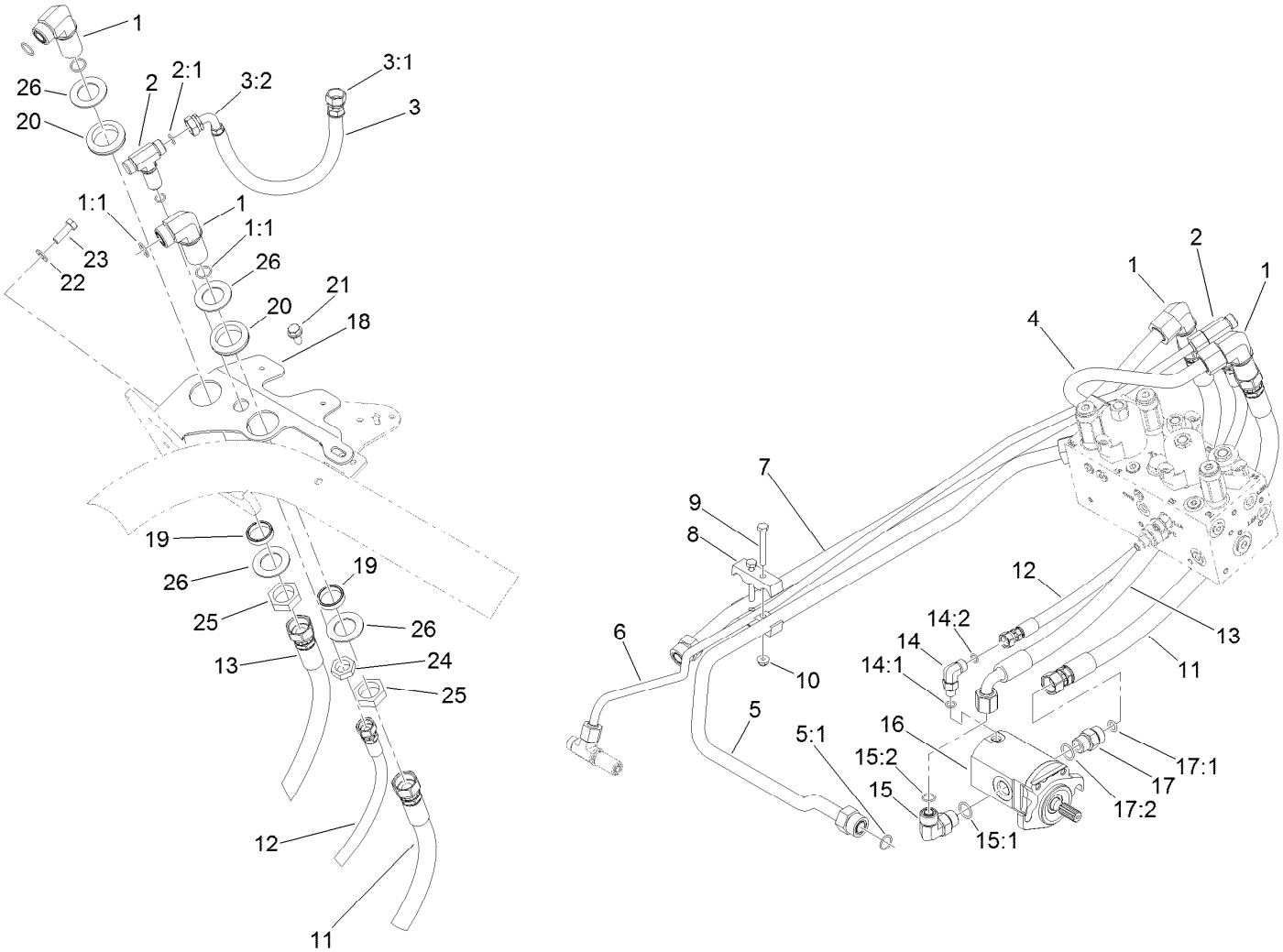


# Rear Hydraulic Reel Drive and Hose Assembly

| Ref. | Part Number | Qty. | Description |
|---|---|---|---|
| 1 | 340-72 | 2 | Fitting-Bulkhead, 90 DEG |
| 1:1 | 237-65 | 2 | O-Ring |
| 2 | 105-8281 | 1 | Tee-Bulkhead |
| 2:1 | 237-22 | 3 | O-Ring |
| 3 | 105-5409 | 1 | Hose ASM |
| 3:1 | 105-8311 | 1 | Fitting-HYD |
| 3:2 | 105-8312 | 1 | Fitting-HYD, 90 DEG |
| 4 | 105-5482 | 1 | Tube-HYD |
| 5 | 107-2582 | 1 | Tube-HYD |
| 5:1 | 237-65 | 1 | O-Ring |
| 6 | 132-9530 | 1 | Tube-HYD |
| 7 | 105-5493 | 1 | Tube-HYD |
| 8 | 93-2509 | 2 | Clamp-Tube |
| 9 | 321-11 | 2 | Screw-HH |
| 10 | 104-7201 | 2 | Nut-HF, NI |
| 11 | 139-6533 | 1 | Hose ASM |
| 12 | 105-5402 | 1 | Hose-HYD |
| 13 | 139-6531 | 1 | Hose ASM |
| 14 | 340-132 | 1 | Fitting-Elbow, 90 DEG |

| Ref. | Part Number | Qty. | Description |
|---|---|---|---|
| 14:1 | 237-78 | 1 | O-Ring |
| 14:2 | 237-21 | 1 | O-Ring |
| 15 | 340-98 | 1 | Fitting-Elbow, 90 DEG |
| 15:1 | 237-79 | 1 | O-Ring |
| 15:2 | 237-30 | 1 | O-Ring |
| 16 | 120-2072 | 1 | HYD Motor ASM |
| 17 | 340-4 | 1 | Fitting-Straight |
| 17:1 | 237-30 | 1 | O-Ring |
| 17:2 | 237-79 | 1 | O-Ring |
| 18 | 105-8253-01 | 1 | Bracket-Bulkhead |
| 19 | 125-1984 | 2 | Spacer |
| 20 | 240-3 | 2 | Grommet-Rubber |
| 21 | 32104-32 | 1 | Screw-HWH |
| 22 | 3256-23 | 1 | Washer-Plain |
| 23 | 322-5 | 1 | Screw-HH |
| 24 | 340-70 | 1 | Nut-Lock |
| 25 | 340-74 | 2 | Nut-Lock, Bulkhead |
| 26 | 69-9010 | 4 | Washer |

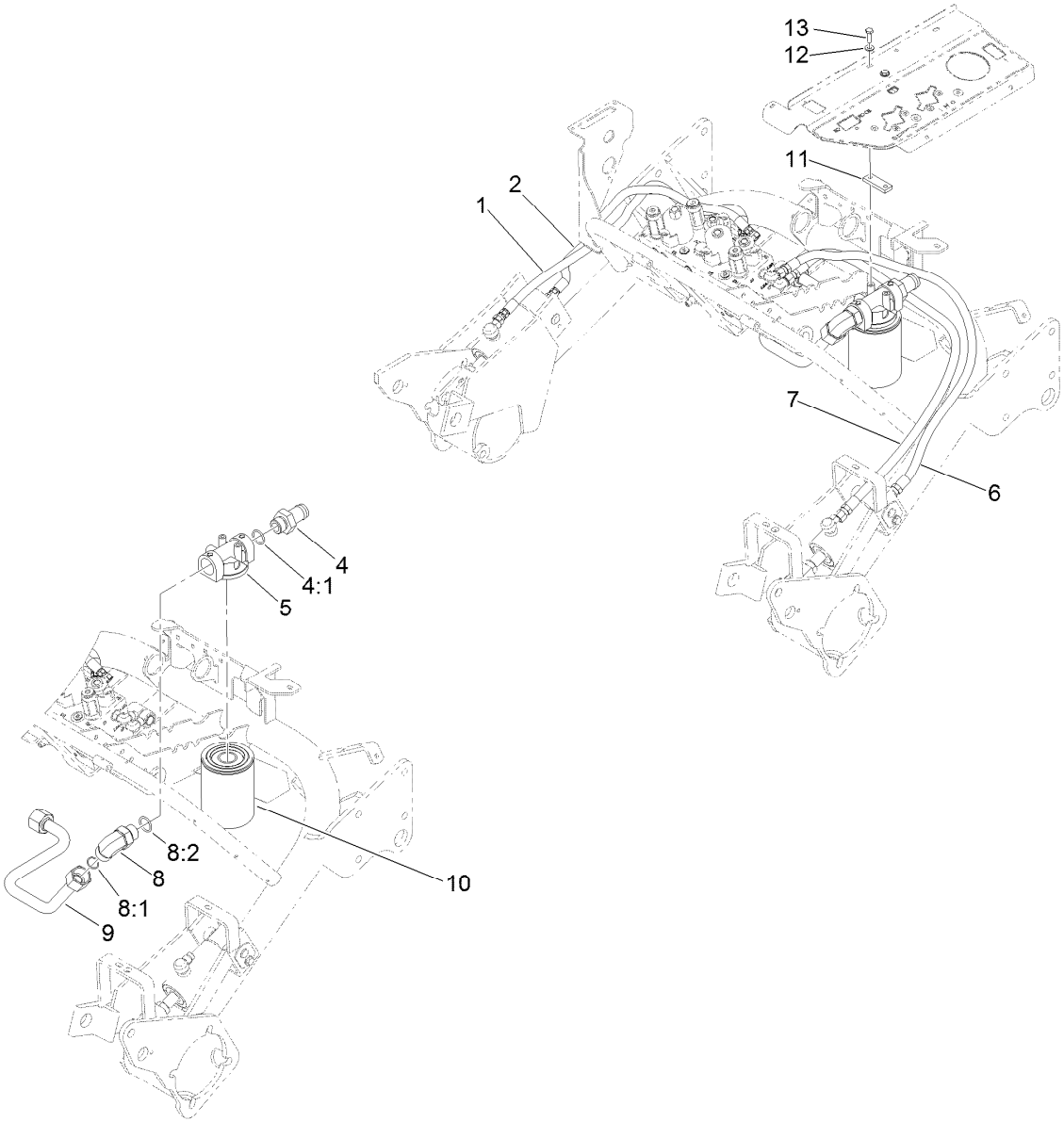


# Front Lift Cylinders Hose and Filter Assembly

| Ref. | Part Number | Qty. | Description |
|---|---|---|---|
| 1 | 108-6506 | 1 | Hose-HYD |
| 2 | 108-6505 | 1 | Hose-HYD |
| 4 | 99-3017 | 1 | Fitting |
| 4:1 | 237-81 | 1 | O-Ring |
| 5 | 92-5821 | 1 | Head-Filter |
| 6 | 130-6547 | 1 | Hose-HYD |
| 7 | 130-6546 | 1 | Hose-HYD |
| 8 | 340-142 | 1 | Fitting-Elbow, 90 DEG |
| 8:1 | 237-58 | 1 | O-Ring |
| 8:2 | 237-81 | 1 | O-Ring |
| 9 | 105-5460 | 1 | Tube-HYD |
| 10 | 107-9531 | 1 | Filter-Oil, HYD |
| 11 | 105-4309 | 1 | Plate-Filter |
| 12 | 3256-22 | 2 | Washer-Flat |
| 13 | 321-5 | 2 | Screw-HH |

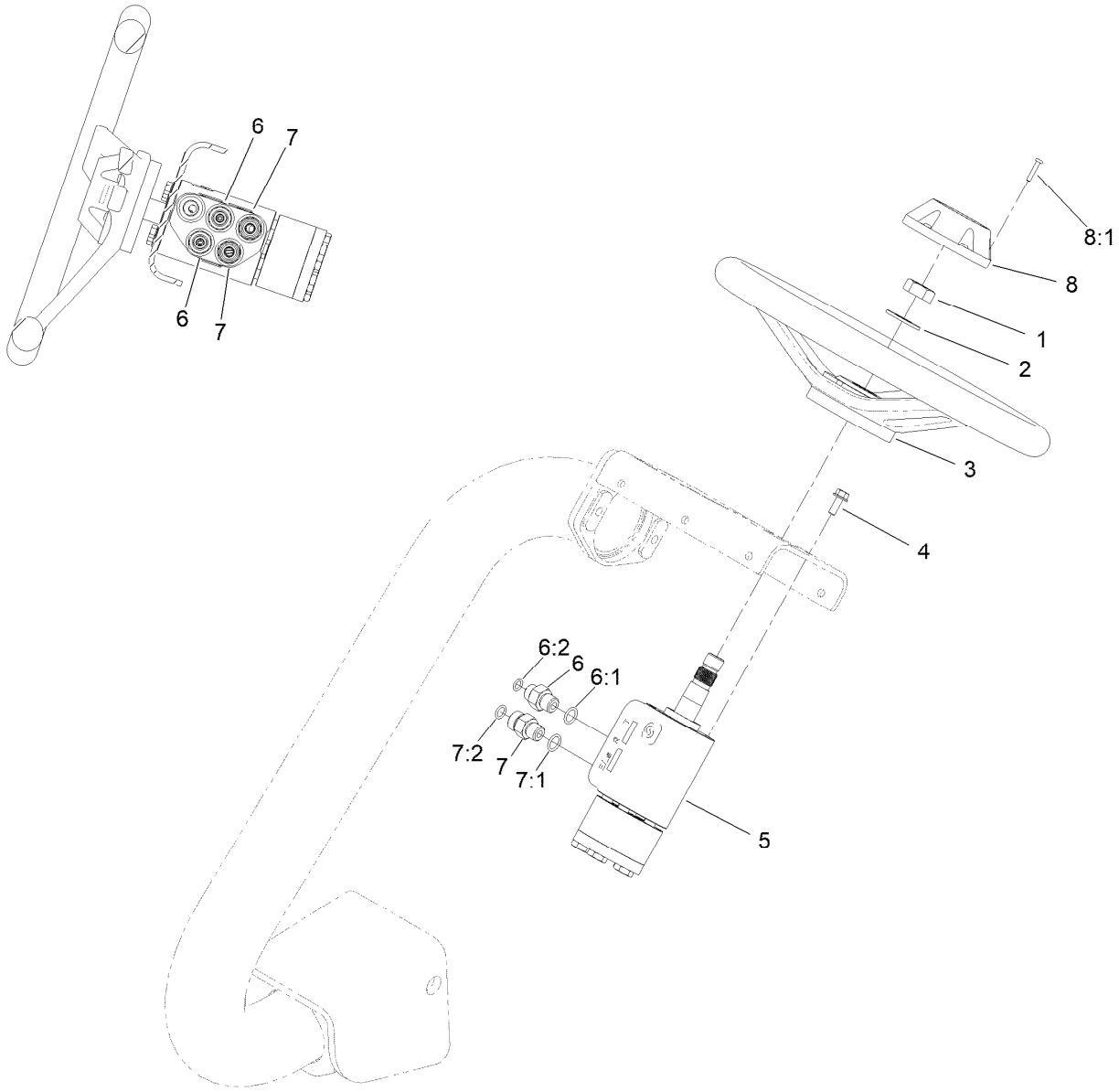


# Steering Wheel and Valve Assembly

| *Ref.* | *Part Number* | *Qty.* | *Description* |
|---|---|---|---|
| 1 | 3296-33 | 1 | Nut-Lock, NI |
| 2 | 3256-27 | 1 | Washer-Flat |
| 3 | 145-0051 | 1 | Steering Wheel |
| 4 | 33103-016 | 4 | Screw-HHF |
| 5 | 114-4672 | 1 | Steering Valve ASM |
| 6 | 340-1 | 2 | Fitting-Straight |
| 6:1 | 237-21 | 1 | O-Ring |
| 6:2 | 237-42 | 1 | O-Ring |
| 7 | 340-2 | 2 | Fitting-Straight |
| 7:1 | 237-22 | 1 | O-Ring |
| 7:2 | 237-42 | 1 | O-Ring |
| 8 | 68-5140 | 1 | Cap-Wheel, Steering |
| 8:1 | 32144-21 | 1 | Screw |

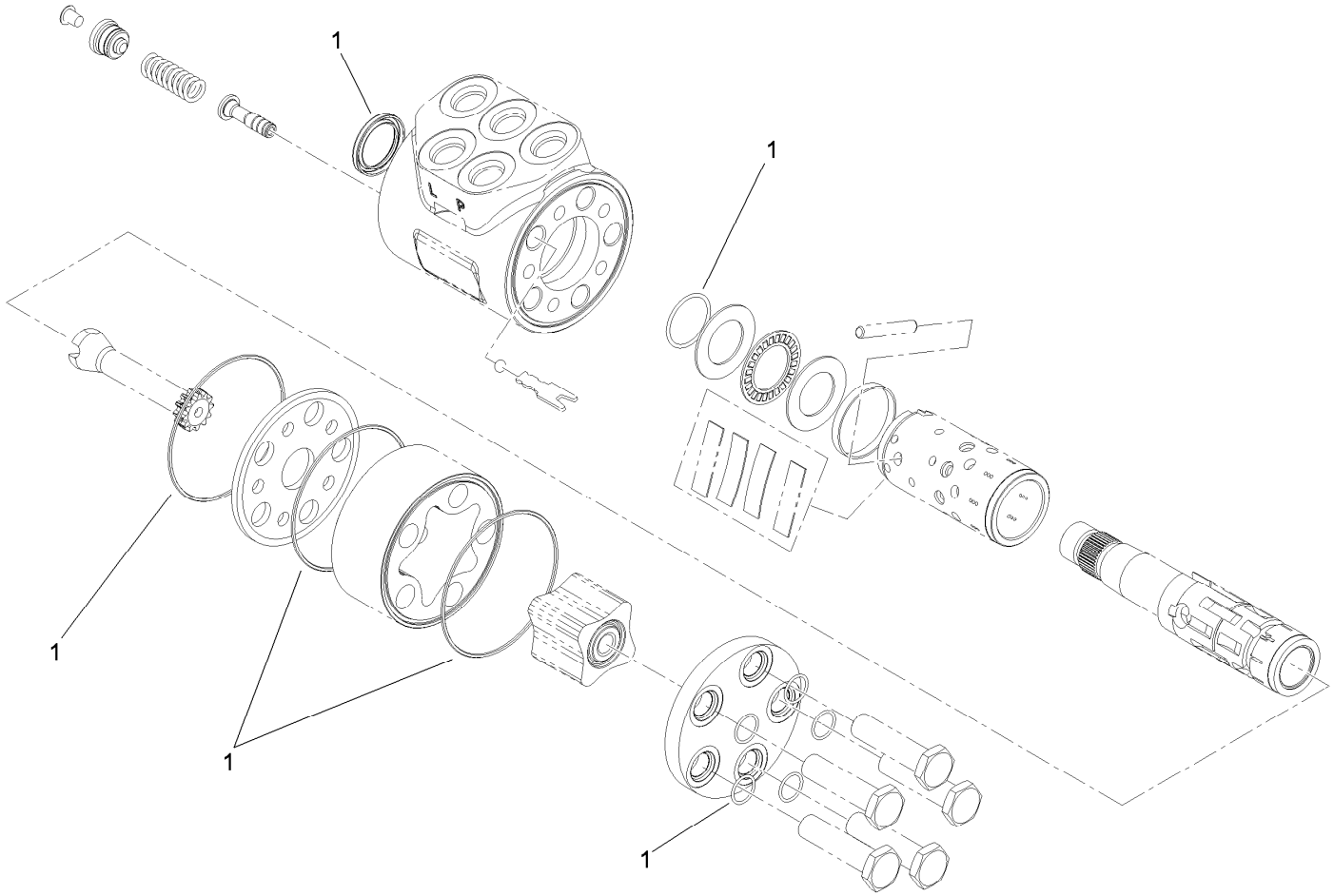


# Steering Valve Assembly No. 114-4672

| *Ref.* | *Part Number* | *Qty.* | *Description* |
|---|---|---|---|
| 1 | 106-6716 | 1 | Seal Kit |

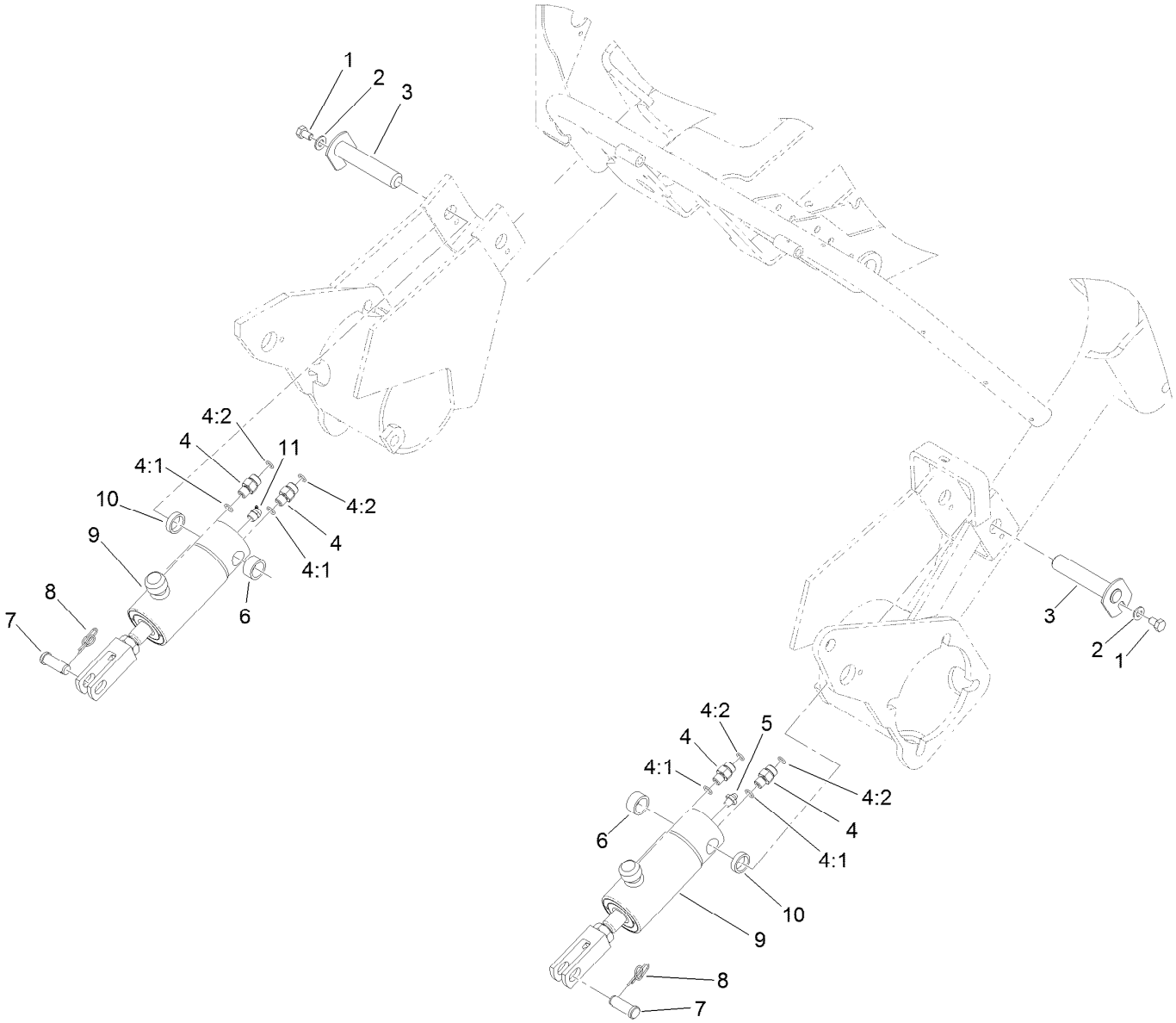


# Right Hand and Left Hand Lift Cylinder Assembly

| *Ref.* | *Part Number* | *Qty.* | *Description* |
|---|---|---|---|
| 1 | 322-1 | 2 | Screw-HH |
| 2 | 3256-23 | 2 | Washer-Plain |
| 3 | 140-5248 | 2 | Pin-Ram, Pivot |
| 4 | 340-92 | 4 | Fitting-Straight |
| 4:1 | 237-78 | 1 | O-Ring |
| 4:2 | 237-21 | 1 | O-Ring |
| 5 | 302-2 | 1 | Fitting-Grease |
| 6 | 74-3730 | 2 | Spacer-Spindle, Rear |
| 7 | 283-8 | 2 | Pin-Clevis |
| 8 | 112-1491 | 2 | Pin-Cotter |
| 9 | 131-2787 | 2 | HYD Cylinder ASM |
| 10 | 105-3828 | 2 | Spacer |
| 11 | 302-10 | 1 | Fitting-Grease |

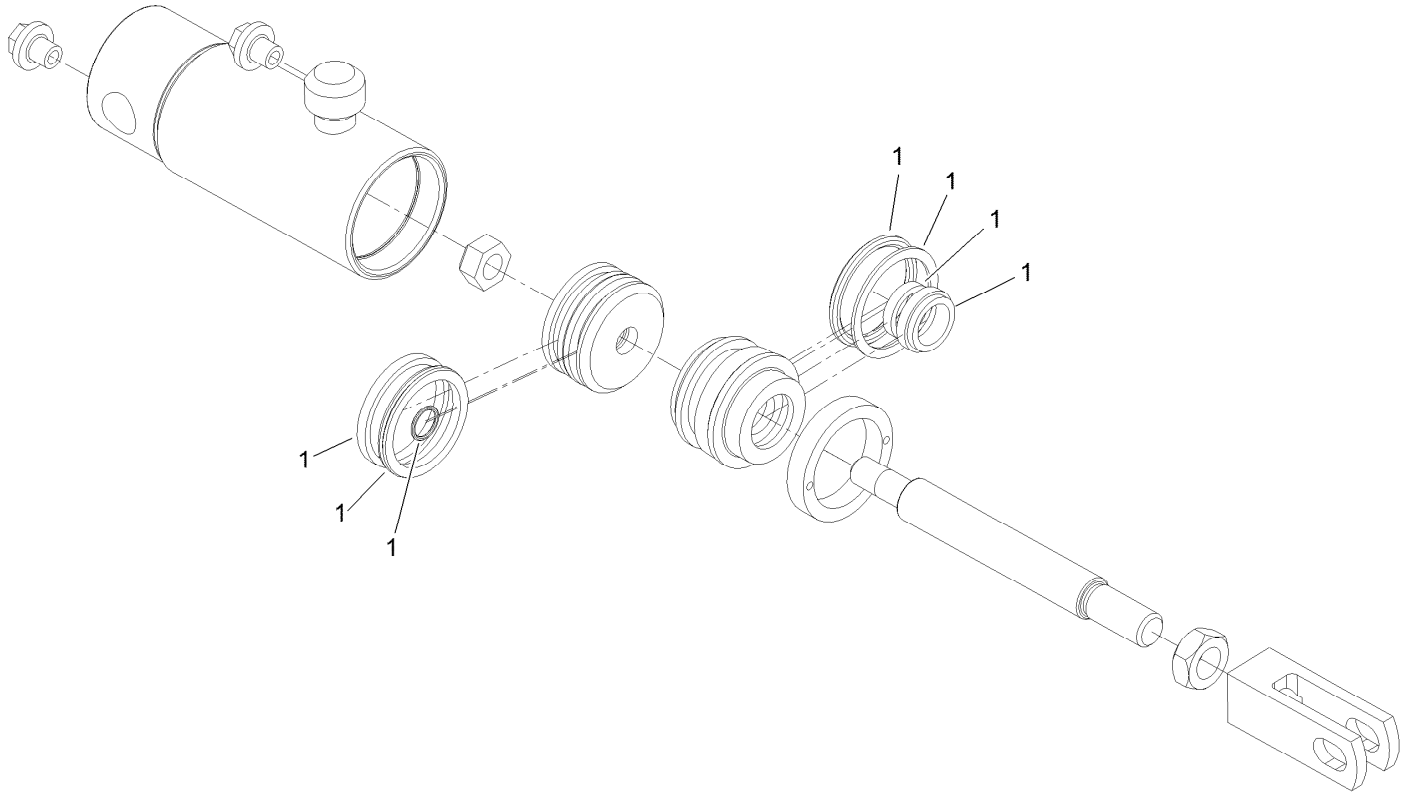


# Hydraulic Cylinder Assembly No. 131-2787

| *Ref.* | *Part Number* | *Qty.* | *Description* |
|---|---|---|---|
| 1 | 132-9515 | 1 | Seal Kit |

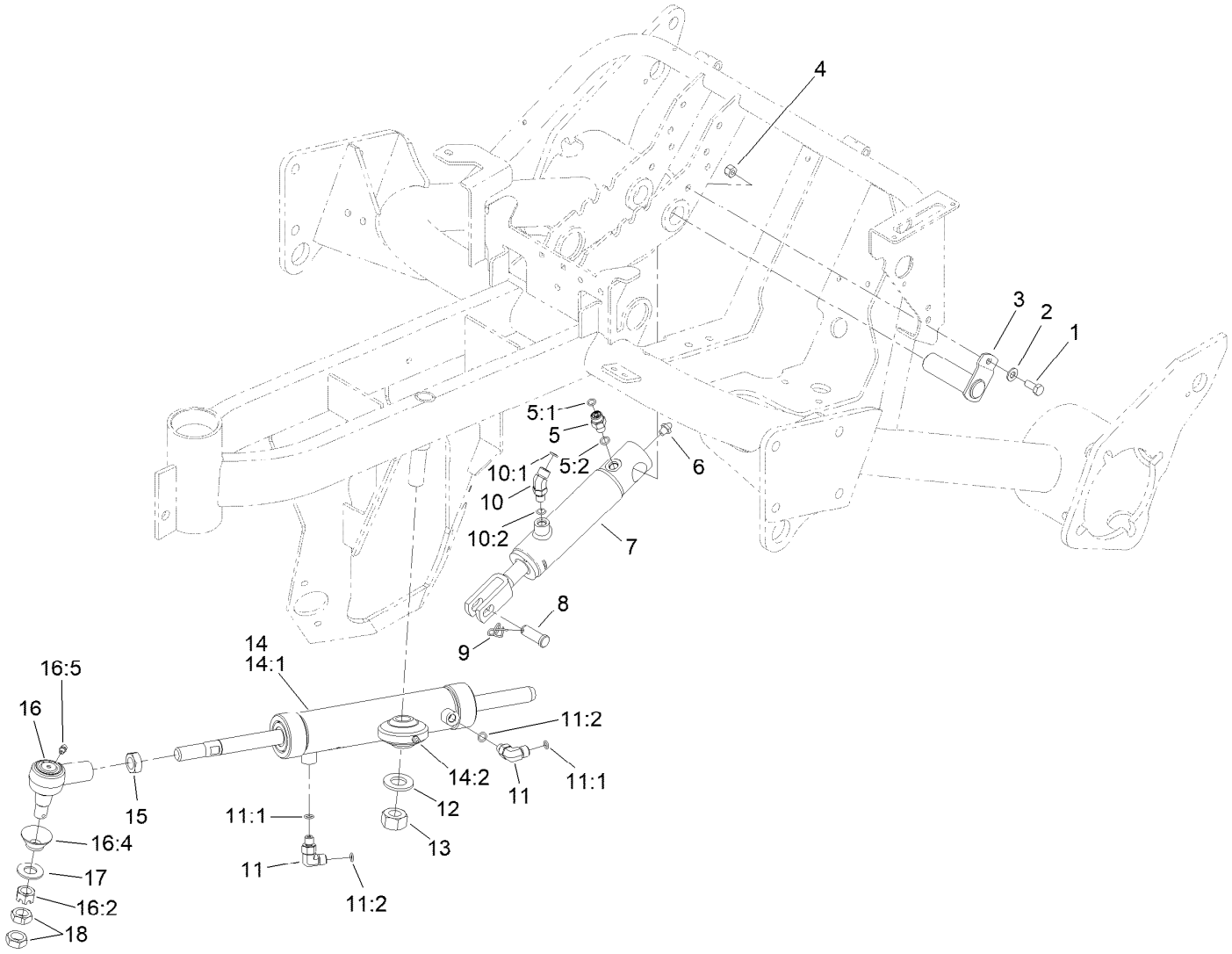


# Steering Cylinder and Center Lift Cylinder Assembly

| Ref. | Part Number | Qty. | Description |
|---|---|---|---|
| 1 | 322-3 | 1 | Screw-HH |
| 2 | 3256-23 | 1 | Washer-Plain |
| 3 | 68-5560 | 1 | Pin-Cylinder, Pivot |
| 4 | 3296-29 | 1 | Nut-Lock, NI |
| 5 | 340-92 | 1 | Fitting-Straight |
| 5:1 | 237-78 | 1 | O-Ring |
| 5:2 | 237-21 | 1 | O-Ring |
| 6 | 302-2 | 1 | Fitting-Grease |
| 7 | 131-2786 | 1 | HYD Cylinder ASM |
| 8 | 283-8 | 1 | Pin-Clevis |
| 9 | 112-1491 | 1 | Pin-Cotter |
| 10 | 340-103 | 1 | Fitting-HYD, 45 DEG |
| 10:1 | 237-78 | 1 | O-Ring |
| 10:2 | 237-21 | 1 | O-Ring |
| 11 | 340-132 | 2 | Fitting-Elbow, 90 DEG |
| 11:1 | 237-78 | 1 | O-Ring |
| 11:2 | 237-21 | 1 | O-Ring |
| 12 | 3256-28 | 1 | Washer-Flat |
| 13 | 3217-12 | 1 | Nut-Hex |
| 14 | 132-3777 | 1 | Steering Cylinder ASM |
| 14:1 | 132-6964 | 1 | Seal Kit |
| 14:2 | 302-5 | 1 | Fitting-Grease |
| 15 | 84-5300 | 1 | Nut-Jam |
| 16 | 107-2553 | 1 | Rod End ASM |
| 16:2 | 32136-2 | 1 | Nut-SHH |
| 16:4 | 106-6896 | 1 | Seal |
| 16:5 | 302-5 | 1 | Fitting-Grease |
| 17 | 3256-27 | 1 | Washer-Flat |
| 18 | 3220-6 | 2 | Nut-Jam |

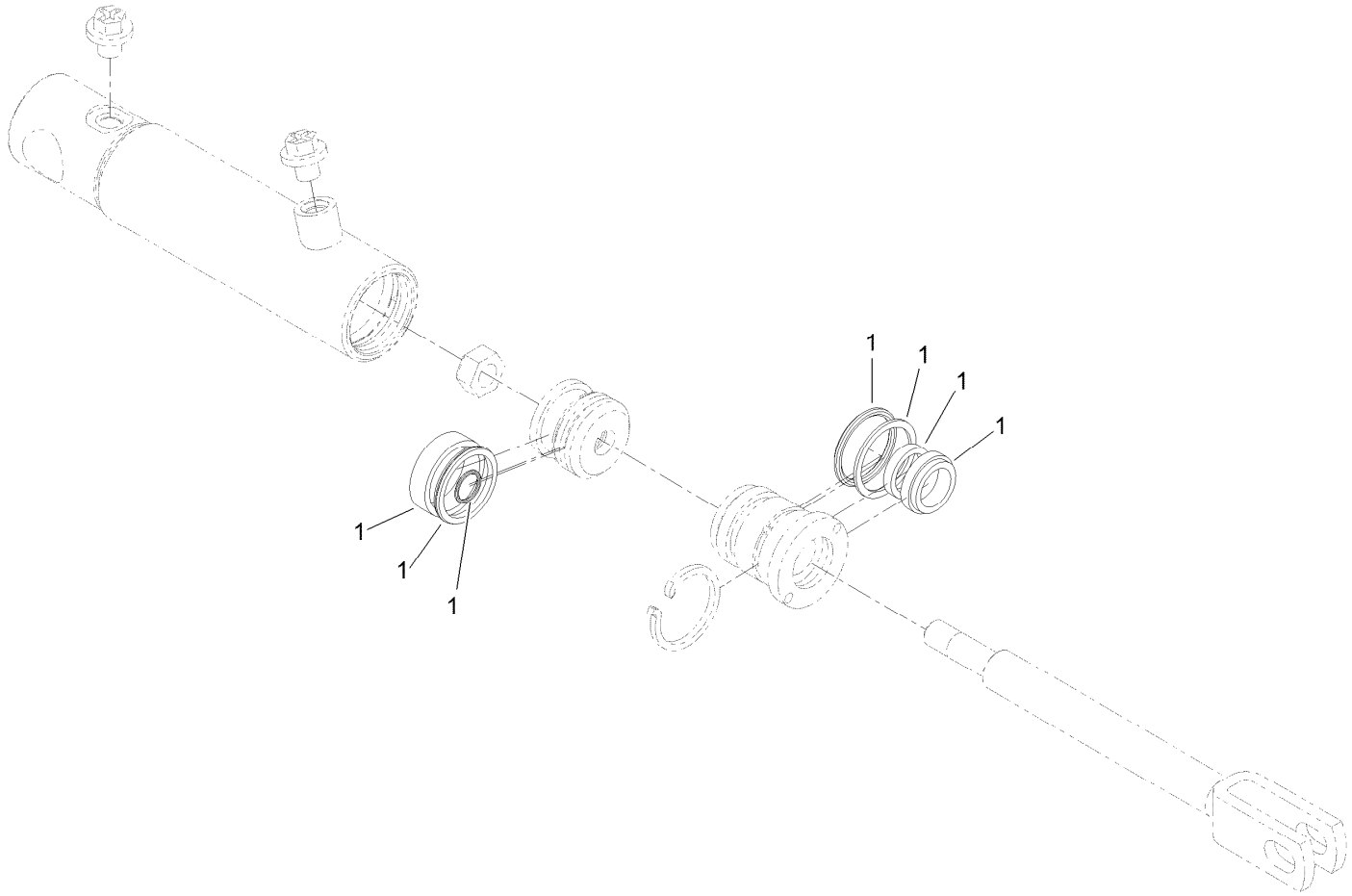


# Hydraulic Cylinder Assembly No. 131-2786

| *Ref.* | *Part Number* | *Qty.* | *Description* |
|---|---|---|---|
| 1 | 132-9516 | 1 | Seal Kit |

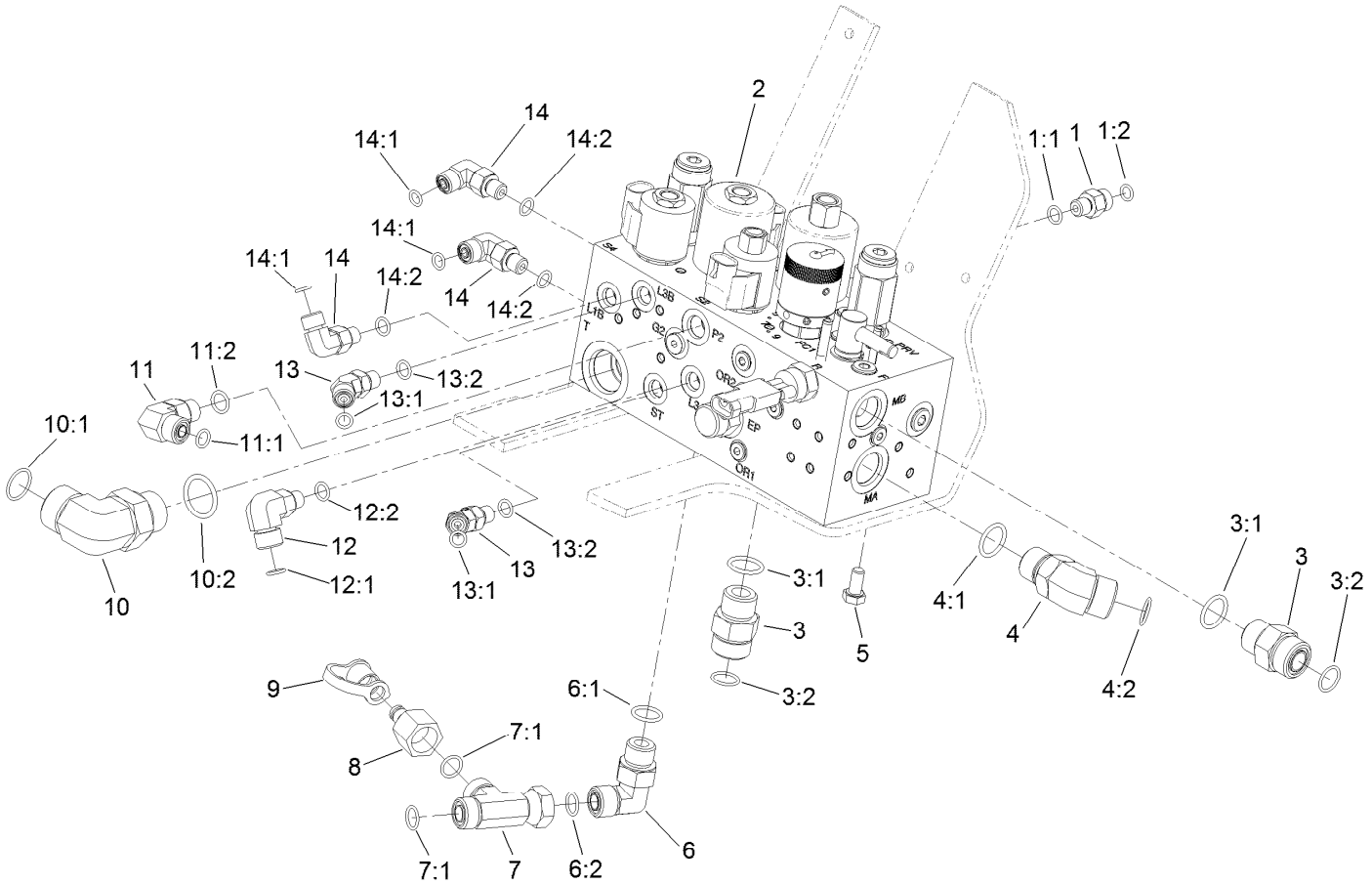


# Hydraulic Manifold Assembly

| Ref. | Part Number | Qty. | Description |
|---|---|---|---|
| 1 | 340-92 | 1 | Fitting-Straight |
| 1:1 | 237-78 | 1 | O-Ring |
| 1:2 | 237-21 | 1 | O-Ring |
| 2 | 112-0289 | 1 | Manifold ASM (With Backlap) |
| 3 | 340-7 | 2 | Fitting-Straight |
| 3:1 | 237-65 | 1 | O-Ring |
| 3:2 | 237-80 | 1 | O-Ring |
| 4 | 340-14 | 1 | Fitting-HYD, 45 DEG |
| 4:1 | 237-65 | 1 | O-Ring |
| 4:2 | 237-80 | 1 | O-Ring |
| 5 | 33114-016 | 2 | Screw-HH |
| 6 | 340-98 | 1 | Fitting-Elbow, 90 DEG |
| 6:1 | 237-79 | 1 | O-Ring |
| 6:2 | 237-30 | 1 | O-Ring |
| 7 | 340-104 | 1 | Fitting-Tee |
| 7:1 | 237-30 | 2 | O-Ring |

| Ref. | Part Number | Qty. | Description |
|---|---|---|---|
| 8 | 100-5616 | 1 | Fitting |
| 9 | 354-79 | 1 | Cap-Dust |
| 10 | 340-142 | 1 | Fitting-Elbow, 90 DEG |
| 10:1 | 237-58 | 1 | O-Ring |
| 10:2 | 237-81 | 1 | O-Ring |
| 11 | 340-77 | 1 | Fitting-Elbow, 90 DEG |
| 11:1 | 237-22 | 1 | O-Ring |
| 11:2 | 237-42 | 1 | O-Ring |
| 12 | 340-97 | 1 | Fitting-Elbow, 90 DEG |
| 12:1 | 237-22 | 1 | O-Ring |
| 12:2 | 237-78 | 1 | O-Ring |
| 13 | 340-103 | 2 | Fitting-HYD, 45 DEG |
| 13:1 | 237-78 | 1 | O-Ring |
| 13:2 | 237-21 | 1 | O-Ring |
| 14 | 340-132 | 3 | Fitting-Elbow, 90 DEG |
| 14:1 | 237-78 | 1 | O-Ring |
| 14:2 | 237-21 | 1 | O-Ring |

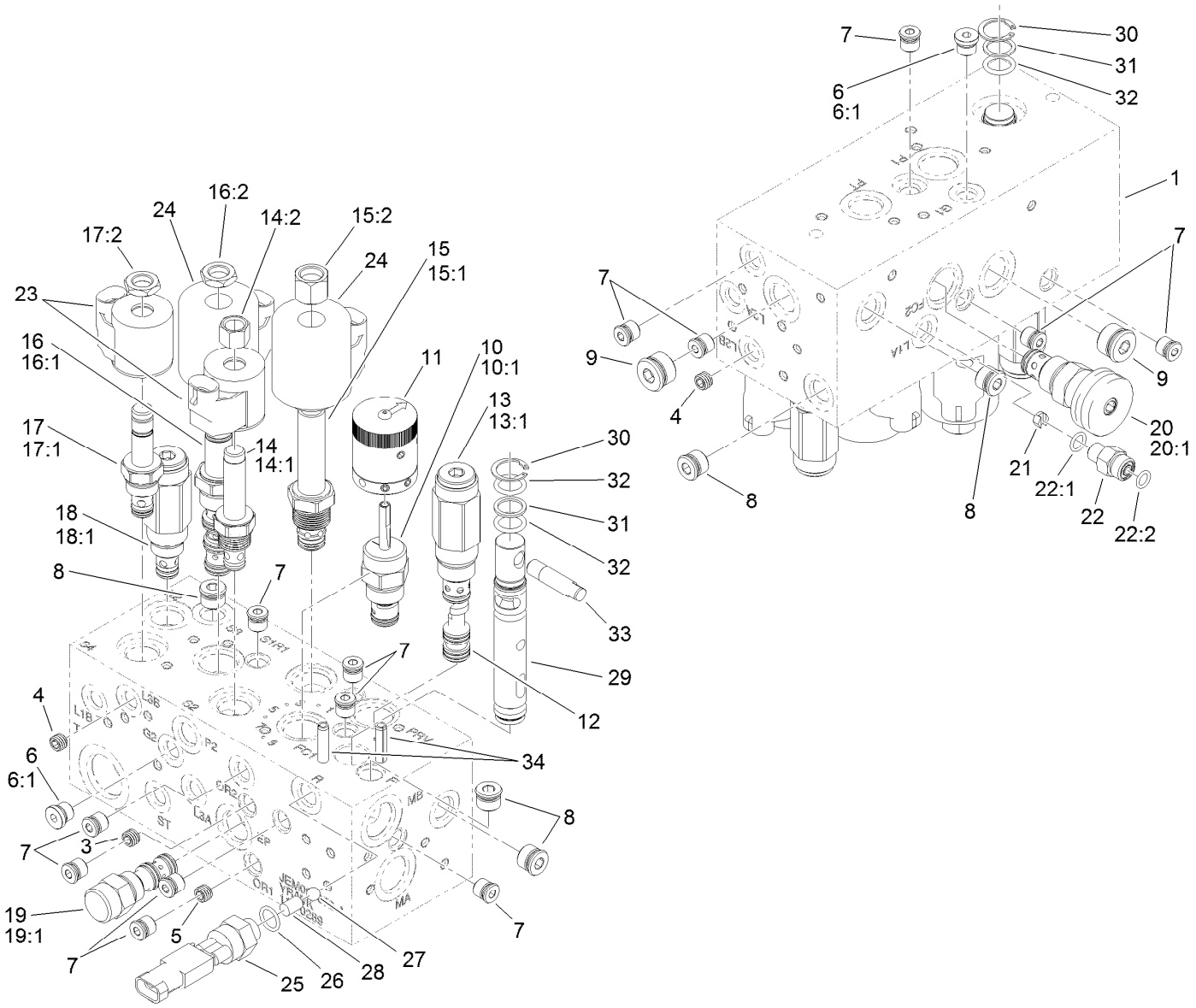


# Hydraulic Manifold Assembly No. 112-0289

| Ref. | Part Number | Qty. | Description |
|---|---|---|---|
| 1 | | 1 | Body-Manifold ● |
| 3 | 112-9202 | 1 | Orifice-Flow, Control (.060) |
| 4 | 110-8887 | 2 | Plug-Orifice (0.055) |
| 5 | 112-9203 | 1 | Orifice-Control, Flow (.013) |
| 6 | 353-990 | 2 | Plug ASM |
| 6:1 | 237-78 | 1 | O-Ring |
| 7 | 106-1025 | 13 | Plug-HYD |
| 8 | 106-1026 | 5 | Plug-HYD |
| 9 | 106-1027 | 2 | Plug |
| 10 | 139-2665 | 1 | Valve-Control, Manual Flow |
| 10:1 | 132-6231 | 1 | Seal Kit |
| 11 | 110-8767 | 1 | Rotary Handle ASM |
| 12 | 119-3506 | 1 | Piston-Pilot |
| 13 | 112-9205 | 1 | Valve-Relief |
| 13:1 | 105-9159 | 1 | Seal Kit |
| 14 | 107-7517 | 1 | Valve-Solenoid |
| 14:1 | 105-9156 | 1 | Seal Kit |
| 14:2 | 107-7812 | 1 | Nut-Solenoid |

| Ref. | Part Number | Qty. | Description |
|---|---|---|---|
| 15 | 119-4137 | 1 | Valve-Relief, Solenoid |
| 15:1 | 110-6316 | 1 | Seal Kit |
| 15:2 | 130-8180 | 1 | Nut-Coil (9/16-24 Unef-2B) |
| 16 | 110-8906 | 1 | Valve-Solenoid |
| 16:1 | 110-8908 | 1 | Spool Valve Seal Kit |
| 16:2 | 110-2634 | 1 | Nut-Coil |
| 17 | 112-9206 | 1 | Solenoid Valve ASM |
| 17:1 | 105-9156 | 1 | Seal Kit |
| 17:2 | 110-2634 | 1 | Nut-Coil |
| 18 | 133-8873 | 1 | Valve-Relief |
| 18:1 | 105-9156 | 1 | Seal Kit |
| 19 | 110-8988 | 1 | Element-Logic |
| 19:1 | 110-8773 | 1 | Seal Kit |
| 20 | 119-4136 | 1 | Control-Flow |
| 20:1 | 110-2633 | 1 | Seal Kit |
| 21 | 114-4682 | 1 | Orifice-Flow Control (.030) |
| 22 | 340-92 | 1 | Fitting-Straight |
| 22:1 | 237-78 | 1 | O-Ring |

● Not serviced separately

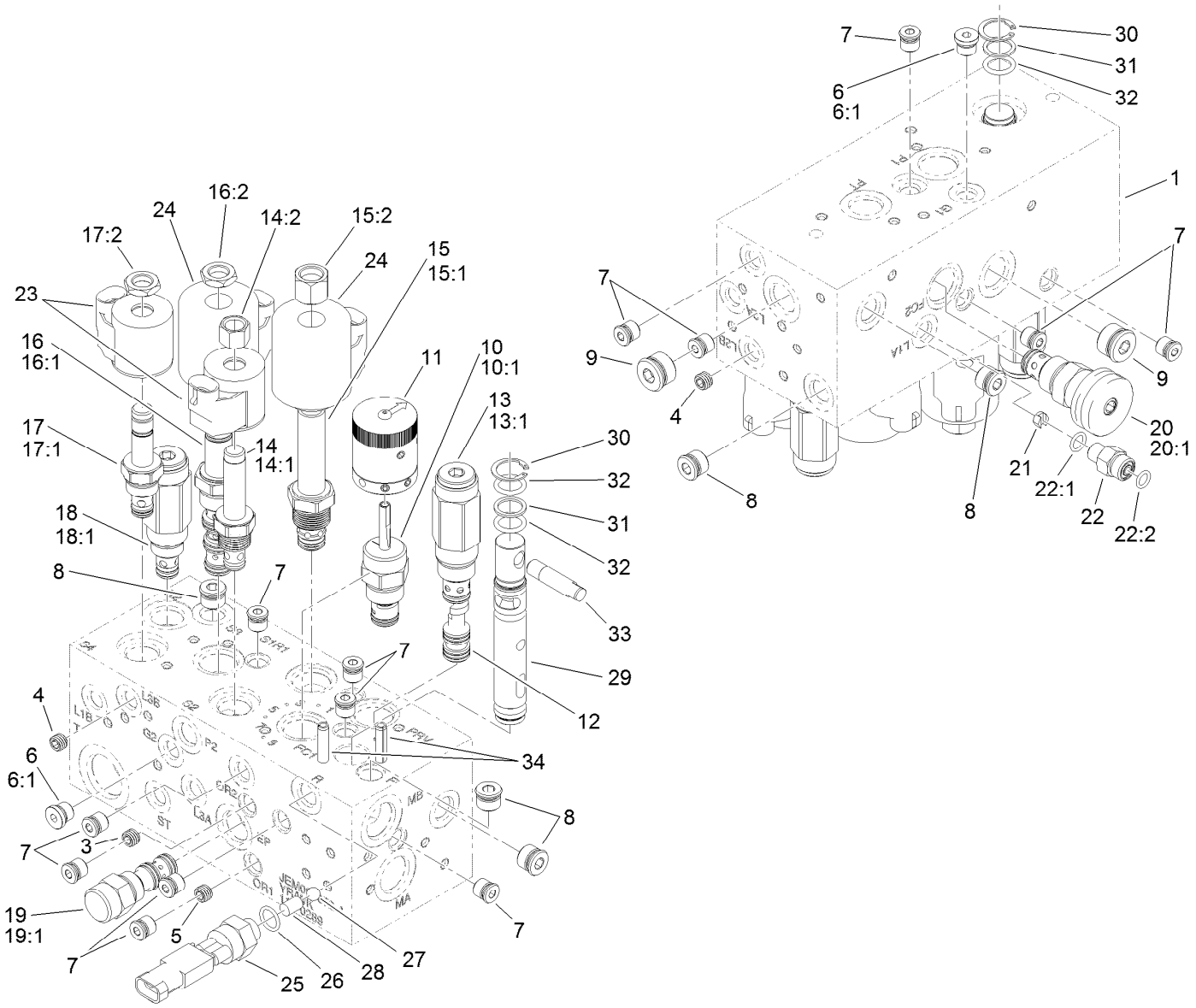


# Hydraulic Manifold Assembly No. 112-0289 (continued)

| Ref. | Part Number | Qty. | Description |
|---|---|---|---|
| 22:2 | 237-21 | 1 | O-Ring |
| 23 | 105-9333 | 2 | Coil-12Vdc |
| 24 | 110-2630 | 2 | Coil-12Vdc |
| 25 | 72-4320 | 1 | Switch-Ball |
| 26 | 110-8757 | 1 | O-Ring |
| 27 | 110-8762 | 1 | Ball-Chrome |
| 28 | 112-6533 | 1 | Pin-Dowel |

| Ref. | Part Number | Qty. | Description |
|---|---|---|---|
| 29 | 112-6536 | 1 | Spool |
| 30 | 112-6532 | 2 | Ring-Retaining |
| 31 | 112-6534 | 2 | Ring-Back Up |
| 32 | 117-4606 | 3 | O-Ring |
| 33 | 110-8758 | 1 | Handle-Spool |
| 34 | 112-6531 | 2 | Pin-Spring |

● Not serviced separately

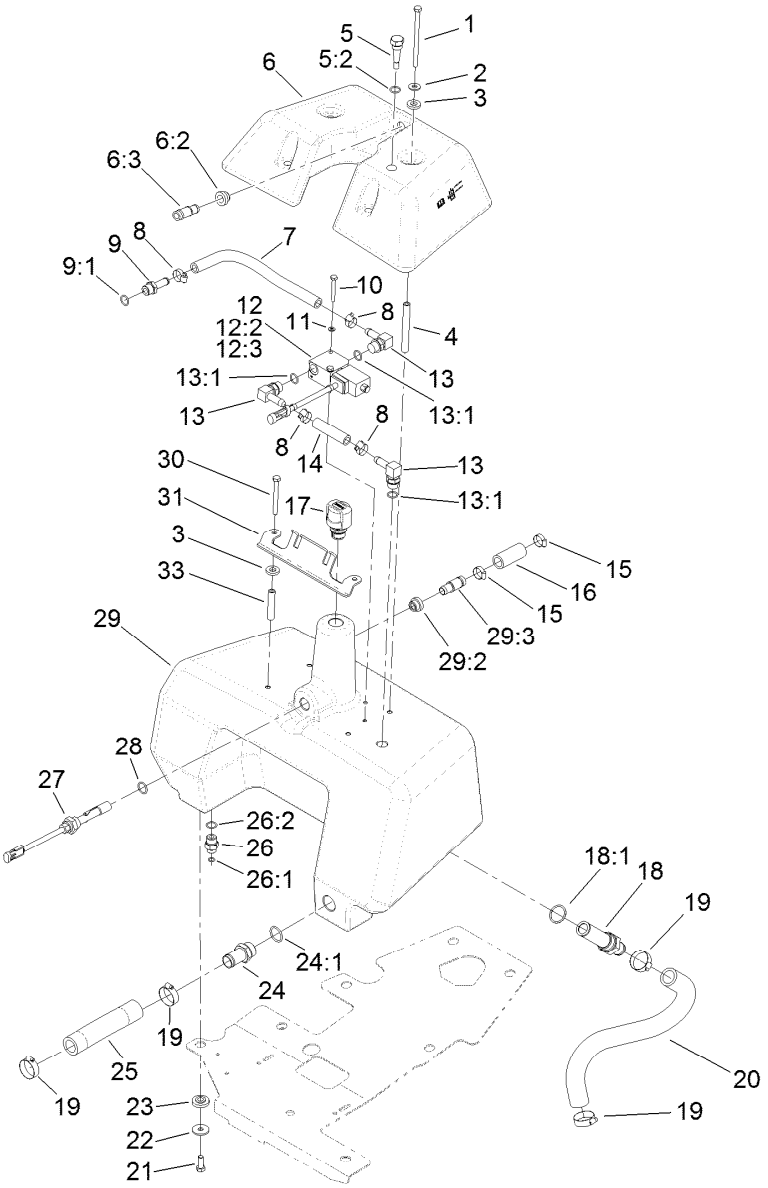


# Hydraulic Reservoir and Leak Detector Assembly

| Ref. | Part Number | Qty. | Description |
|---|---|---|---|
| 1 | 322-29 | 2 | Screw-HH |
| 2 | 3256-71 | 2 | Washer-Flat |
| 3 | 83-1470 | 4 | Washer-Neoprene |
| 4 | 83-1560 | 2 | Spacer-Tube, Long |
| 5 | 133-2334 | 1 | Dipstick ASM |
| 5:2 | 237-79 | 1 | O-Ring |
| 6 | 136-8528 | 1 | Tank-Detector, Leak |
| 6:2 | 136-8531 | 1 | Grommet |
| 6:3 | 136-8532 | 1 | Spout |
| 7 | 83-2070 | 1 | Hose-Valve |
| 8 | 2412-36 | 4 | Clamp-Hose |
| 9 | 354-121 | 1 | Fitting-STR |
| 9:1 | 237-79 | 1 | O-Ring |
| 10 | 321-11 | 2 | Screw-HH |
| 11 | 3253-3 | 2 | Washer-Lock |
| 12 | 83-1460 | 1 | Solenoid Valve ASM |
| 12:2 | 83-2000 | 1 | Spool-Valve |
| 12:3 | 83-2010 | 1 | Coil ASM |
| 13 | 354-120 | 3 | Fitting-Elbow, 90 |
| 13:1 | 237-79 | 1 | O-Ring |
| 14 | 83-2080 | 1 | Hose-Valve, Tank |

| Ref. | Part Number | Qty. | Description |
|---|---|---|---|
| 15 | 2412-141 | 2 | Clamp-Drive, Worm |
| 16 | 139-2716 | 1 | Hose-Formed |
| 17 | 115-9793 | 1 | Breather |
| 18 | 112-0211 | 1 | Strainer Fitting ASM |
| 18:1 | 237-146 | 1 | O-Ring |
| 19 | 2412-34 | 4 | Clamp-Hose |
| 20 | 105-8285 | 1 | Hose-Inlet, Pump |
| 21 | 323-6 | 3 | Screw-HH |
| 22 | 63-8410 | 3 | Washer |
| 23 | 240-11 | 3 | Bushing-Flange |
| 24 | 83-0870 | 1 | Fitting-Hose, Barbed |
| 24:1 | 237-177 | 1 | O-Ring |
| 25 | 105-5410 | 1 | Hose-HYD |
| 26 | 340-3 | 1 | Fitting-Straight |
| 26:1 | 237-22 | 1 | O-Ring |
| 26:2 | 237-79 | 1 | O-Ring |
| 27 | 83-1450 | 1 | Sensor-Level, Oil |
| 28 | 237-80 | 1 | O-Ring |
| 29 | 136-8526 | 1 | Hydraulic Tank ASM |
| 29:2 | 136-8531 | 1 | Grommet |
| 29:3 | 136-8532 | 1 | Spout |

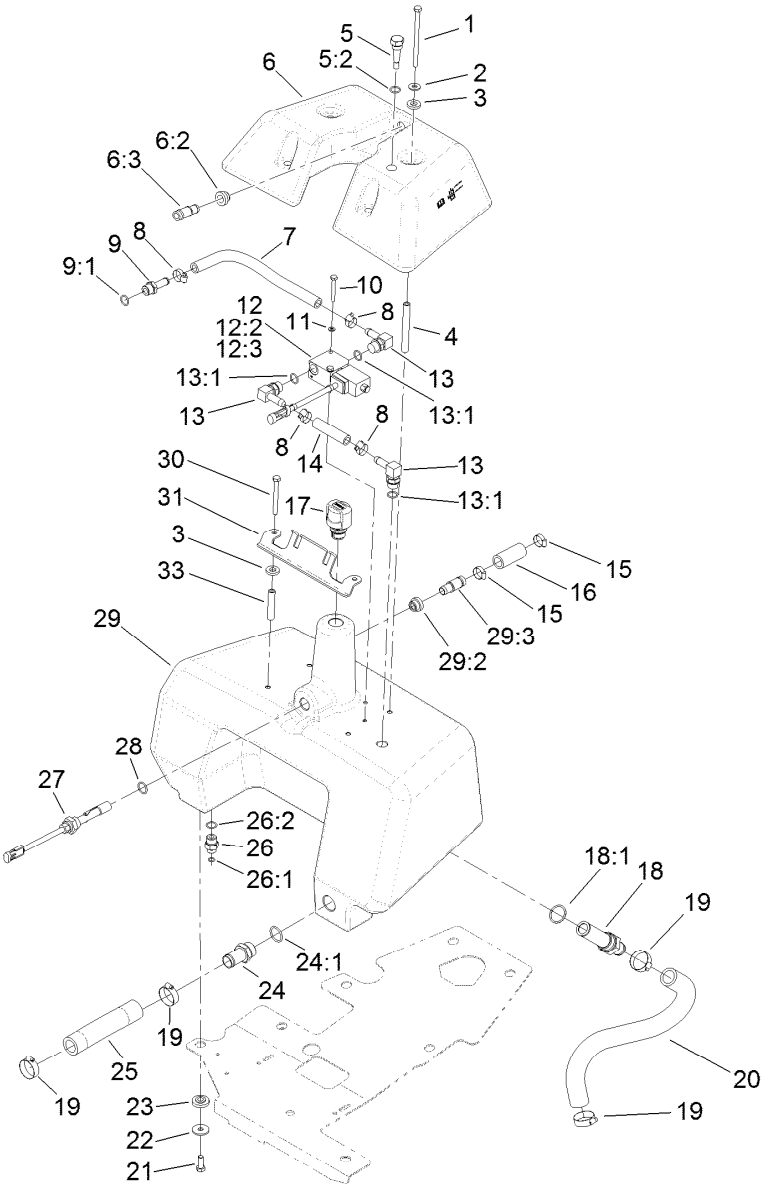


# Hydraulic Reservoir and Leak Detector Assembly (continued)

| Ref. | Part Number | Qty. | Description |
|---|---|---|---|
| 30 | 322-14 | 2 | Screw-HH |
| 31 | 121-2564 | 1 | Bracket |
| 33 | 83-1550 | 2 | Spacer-Tube, Short |

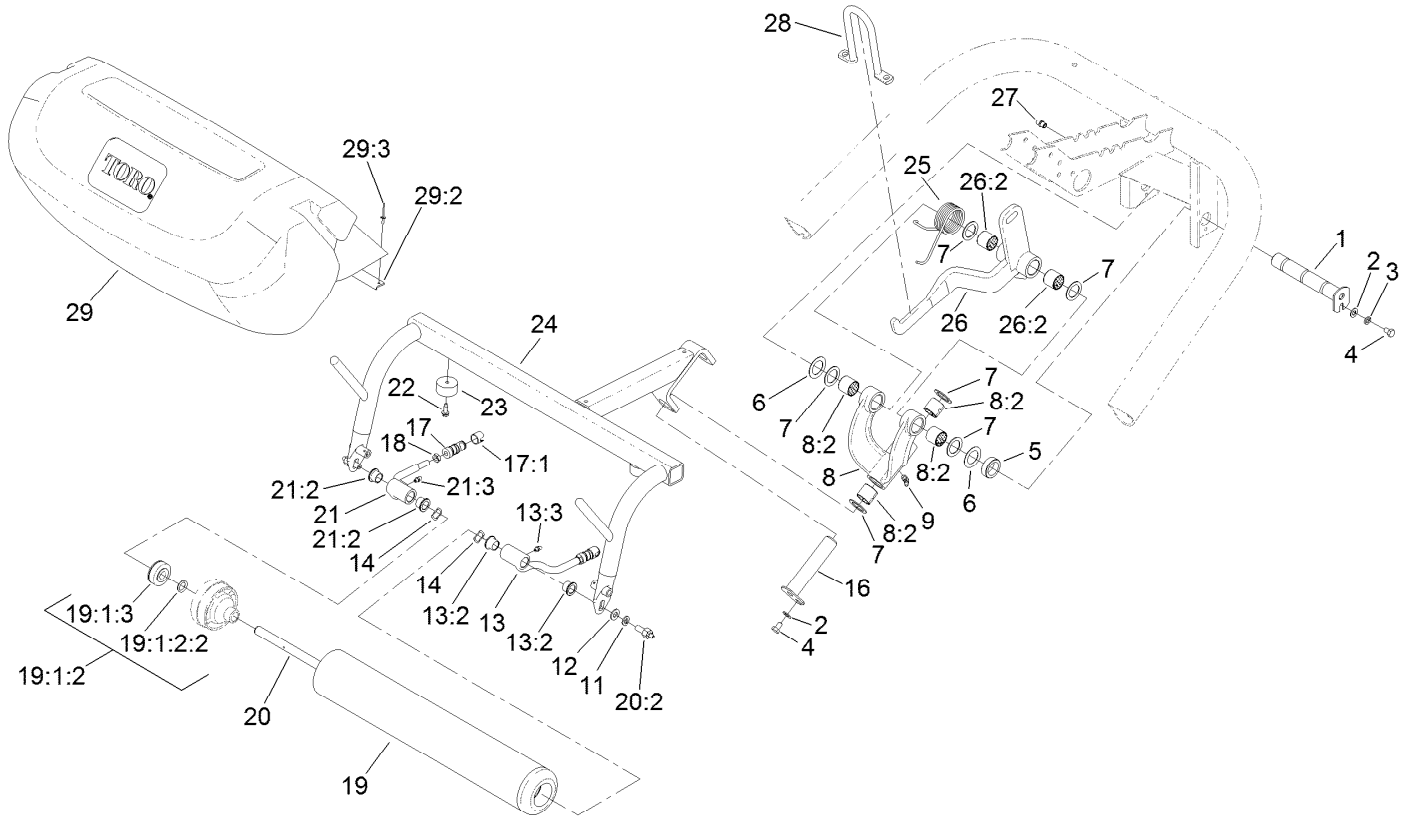


# Center Pull Frame Assembly

| Ref. | Part Number | Qty. | Description |
|---|---|---|---|
| 1 | 114-4685 | 1 | Pin-Hinge |
| 2 | 3256-23 | 2 | Washer-Plain |
| 3 | 3253-4 | 1 | Washer-Lock |
| 4 | 322-1 | 2 | Screw-HH |
| 5 | 93-2384 | 1 | Spacer-Carrier |
| 6 | 5-1226 | 2 | Washer |
| 7 | 10-8110 | 6 | Washer-Thrust |
| 8 | 105-0452 | 1 | Pivot Hinge ASM |
| 8:2 | 125-5196 | 4 | Bushing |
| 9 | 302-60 | 1 | Fitting-Grease |
| 11 | 3253-21 | 2 | Washer-Lock |
| 12 | 3256-24 | 2 | Washer-Flat |
| 13 | 138-6311 | 1 | Arm-Pull-Assembly-LH |
| 13:2 | 125-5178 | 1 | Bushing |
| 13:3 | 302-5 | 1 | Fitting-Grease |
| 14 | 3290-317 | 2 | Washer-Spring |
| 16 | 10-6090 | 1 | Pin-Pivot |
| 17 | 99-1460 | 2 | Ball Joint Receiver ASM |

| Ref. | Part Number | Qty. | Description |
|---|---|---|---|
| 17:1 | 99-1461 | 1 | Sleeve-Joint, Ball |
| 18 | 3220-3 | 2 | Nut-HJ |
| 19 | 133-2337 | 1 | Roller ASM |
| 19:1:2 | | 2 | Hub Yoke ASM ● |
| 19:1:2:2 | 253-83 | 1 | Seal-Oil |
| 19:1:3 | 133-2378 | 2 | Bearing |
| 20 | 136-8471 | 1 | Shaft Kit |
| 20:2 | 127-6422 | 2 | Screw-Grease, Roller |
| 21 | 138-6303 | 1 | Arm-Pull-Assembly-RH |
| 21:2 | 125-5178 | 2 | Bushing |
| 21:3 | 302-5 | 1 | Fitting-Grease |
| 22 | 32104-95 | 2 | Screw-HWH |
| 23 | 94-4548 | 2 | Bumper-Recessed |
| 24 | 136-8485 | 1 | Frame-Pull, Center |
| 25 | 110-3953 | 1 | Spring-Torsion, Center |
| 26 | 110-3955 | 1 | Center Lift Arm ASM |
| 26:2 | 125-5196 | 2 | Bushing |
| 27 | 302-33 | 1 | Fitting-Grease |

● Not serviced separately

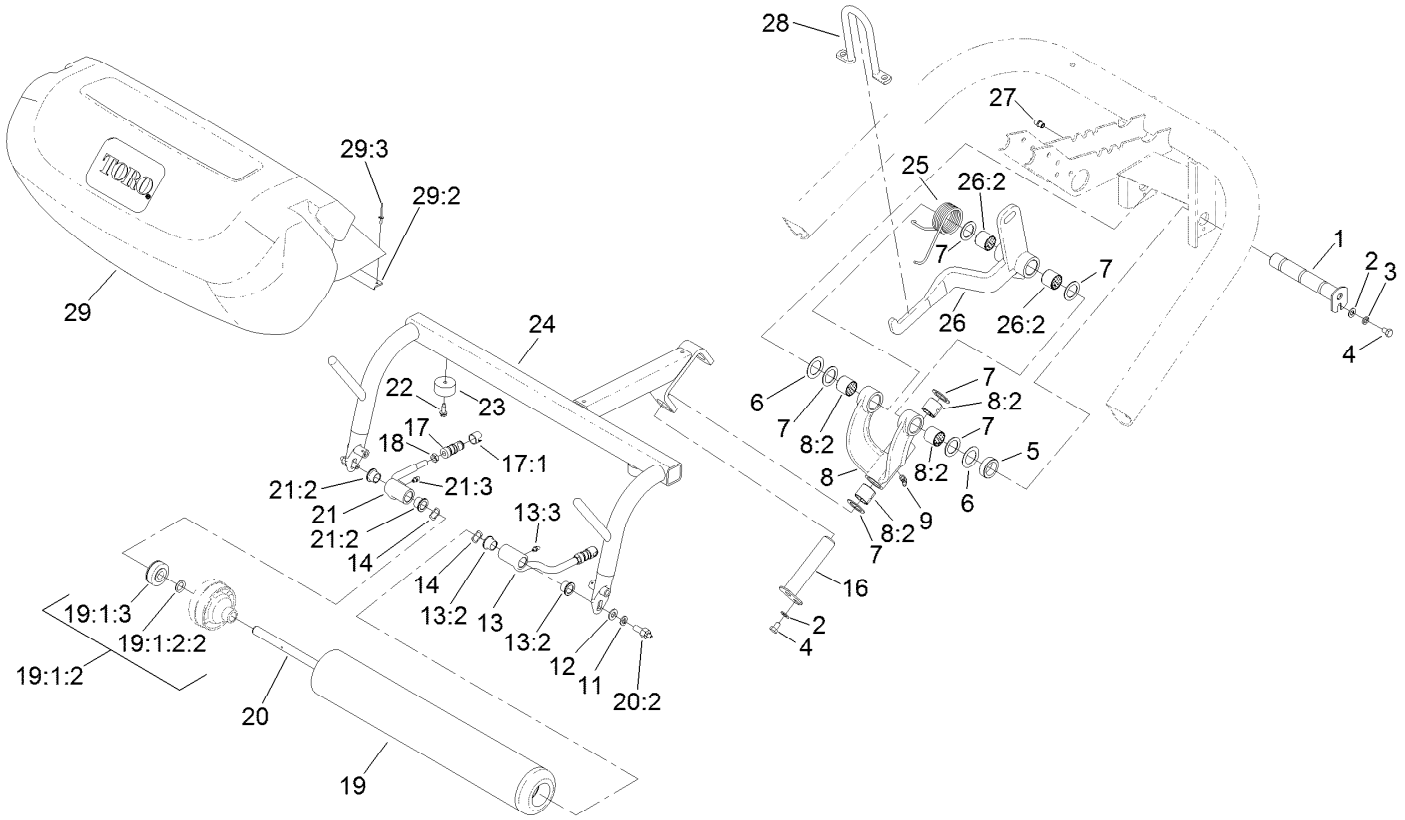


# Center Pull Frame Assembly (continued)

| Ref. | Part Number | Qty. | Description |
|---|---|---|---|
| 28 | 105-5740 | 1 | Hook-Lift |
| 29 | 108-8642 | 1 | Grass Basket ASM |

| Ref. | Part Number | Qty. | Description |
|---|---|---|---|
| 29:2 | 104-2607 | 1 | Strip-Basket |
| 29:3 | 3269-5 | 8 | Rivet-Pop |

● Not serviced separately

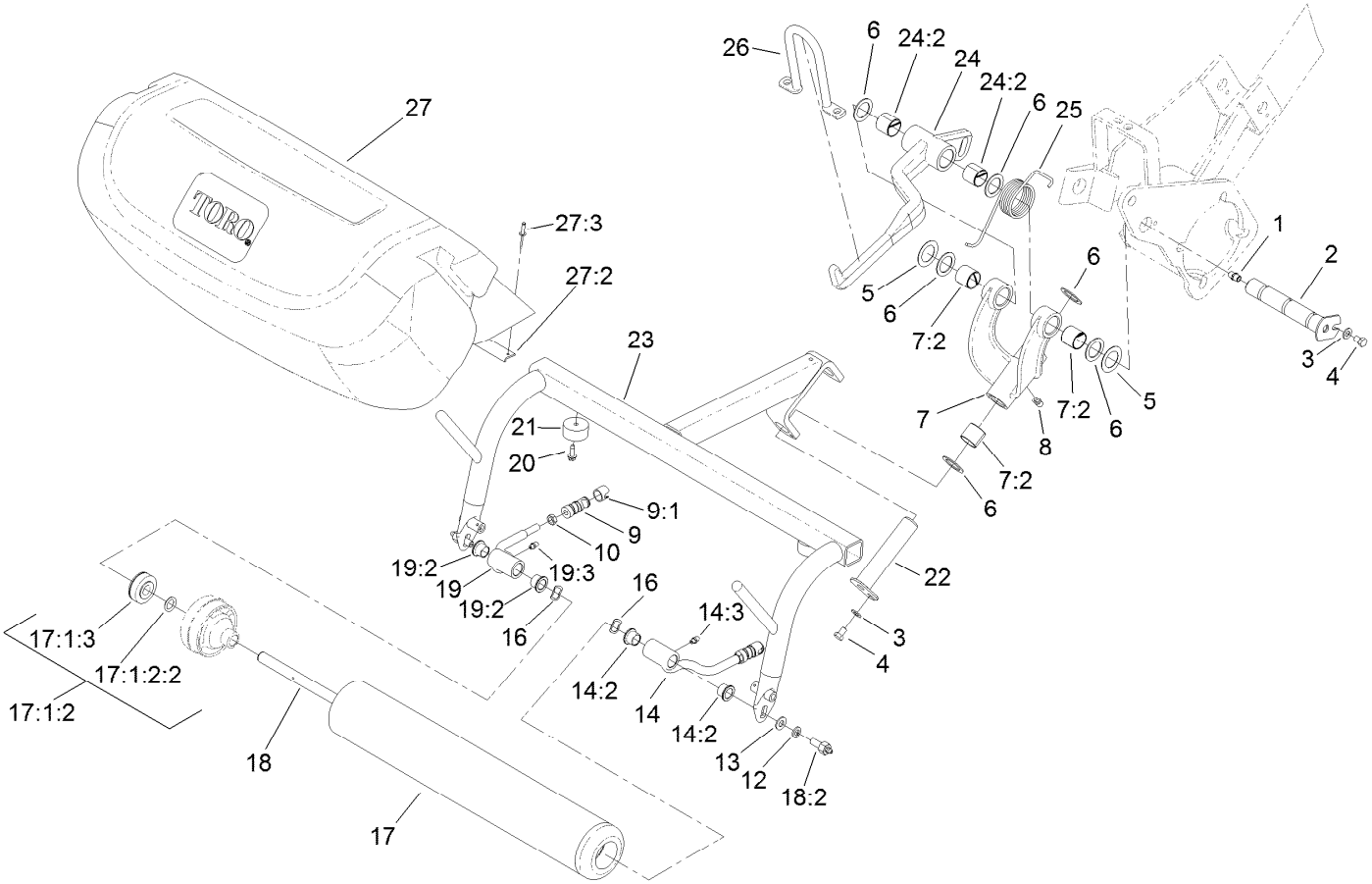


# Left Pull Frame Assembly

| Ref. | Part Number | Qty. | Description |
|---|---|---|---|
| 1 | 302-33 | 1 | Fitting-Grease |
| 2 | 114-4683 | 1 | Pin-Hinge |
| 3 | 3256-23 | 2 | Washer-Plain |
| 4 | 322-1 | 2 | Screw-HH |
| 5 | 5-1226 | 2 | Washer |
| 6 | 10-8110 | 6 | Washer-Thrust |
| 7 | 10-7820 | 1 | Pivot Hinge ASM |
| 7:2 | 125-5196 | 4 | Bushing |
| 8 | 302-60 | 1 | Fitting-Grease |
| 9 | 99-1460 | 2 | Ball Joint Receiver ASM |
| 9:1 | 99-1461 | 1 | Sleeve-Joint, Ball |
| 10 | 3220-3 | 2 | Nut-HJ |
| 12 | 3253-21 | 2 | Washer-Lock |
| 13 | 3256-24 | 2 | Washer-Flat |
| 14 | 138-6311 | 1 | Arm-Pull-Assembly-LH |
| 14:2 | 125-5178 | 1 | Bushing |
| 14:3 | 302-5 | 1 | Fitting-Grease |
| 16 | 3290-317 | 2 | Washer-Spring |
| 17 | 133-2337 | 1 | Roller ASM |

| Ref. | Part Number | Qty. | Description |
|---|---|---|---|
| 17:1:2 | | 2 | Hub Yoke ASM ● |
| 17:1:2:2 | 253-83 | 1 | Seal-Oil |
| 17:1:3 | 133-2378 | 2 | Bearing |
| 18 | 136-8471 | 1 | Shaft Kit |
| 18:2 | 127-6422 | 2 | Screw-Grease, Roller |
| 19 | 138-6303 | 1 | Arm-Pull-Assembly-RH |
| 19:2 | 125-5178 | 2 | Bushing |
| 19:3 | 302-5 | 1 | Fitting-Grease |
| 20 | 32104-95 | 2 | Screw-HWH |
| 21 | 94-4548 | 2 | Bumper-Recessed |
| 22 | 10-6090 | 1 | Pin-Pivot |
| 23 | 136-8484 | 1 | Frame-Pull, LH |
| 24 | 107-2598 | 1 | LH Lift Arm ASM |
| 24:2 | 125-5196 | 2 | Bushing |
| 25 | 110-3952 | 1 | Spring-Torsion, LH |
| 26 | 105-5740 | 1 | Hook-Lift |
| 27 | 108-8642 | 1 | Grass Basket ASM |
| 27:2 | 104-2607 | 1 | Strip-Basket |
| 27:3 | 3269-5 | 8 | Rivet-Pop |

● Not serviced separately

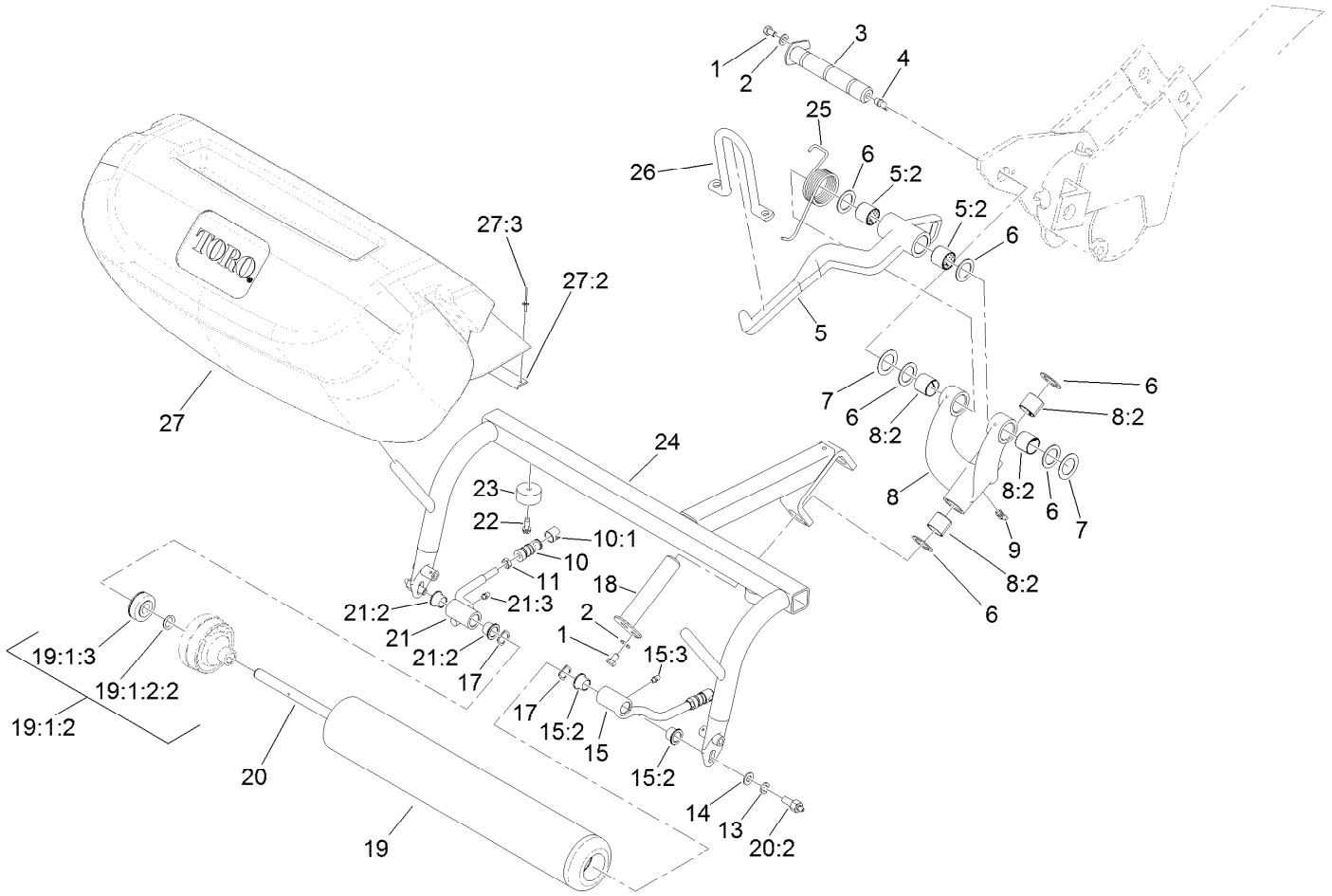


# Right Pull Frame Assembly

| Ref. | Part Number | Qty. | Description |
|---|---|---|---|
| 1 | 322-1 | 2 | Screw-HH |
| 2 | 3256-23 | 2 | Washer-Plain |
| 3 | 114-4683 | 1 | Pin-Hinge |
| 4 | 302-33 | 1 | Fitting-Grease |
| 5 | 107-2599 | 1 | RH Lift Arm ASM |
| 5:2 | 125-5196 | 2 | Bushing |
| 6 | 10-8110 | 6 | Washer-Thrust |
| 7 | 5-1226 | 2 | Washer |
| 8 | 10-7820 | 1 | Pivot Hinge ASM |
| 8:2 | 125-5196 | 4 | Bushing |
| 9 | 302-60 | 1 | Fitting-Grease |
| 10 | 99-1460 | 2 | Ball Joint Receiver ASM |
| 10:1 | 99-1461 | 1 | Sleeve-Joint, Ball |
| 11 | 3220-3 | 2 | Nut-HJ |
| 13 | 3253-21 | 2 | Washer-Lock |
| 14 | 3256-24 | 2 | Washer-Flat |
| 15 | 138-6311 | 1 | Arm-Pull-Assembly-LH |
| 15:2 | 125-5178 | 1 | Bushing |
| 15:3 | 302-5 | 1 | Fitting-Grease |

| Ref. | Part Number | Qty. | Description |
|---|---|---|---|
| 17 | 3290-317 | 2 | Washer-Spring |
| 18 | 10-6090 | 1 | Pin-Pivot |
| 19 | 133-2337 | 1 | Roller ASM |
| 19:1:2 | | 2 | Hub Yoke ASM ● |
| 19:1:2:2 | 253-83 | 1 | Seal-Oil |
| 19:1:3 | 133-2378 | 2 | Bearing |
| 20 | 136-8471 | 1 | Shaft Kit |
| 20:2 | 127-6422 | 2 | Screw-Grease, Roller |
| 21 | 138-6303 | 1 | Arm-Pull-Assembly-RH |
| 21:2 | 125-5178 | 2 | Bushing |
| 21:3 | 302-5 | 1 | Fitting-Grease |
| 22 | 32104-95 | 2 | Screw-HWH |
| 23 | 94-4548 | 2 | Bumper-Recessed |
| 24 | 136-8483 | 1 | Frame-Pull, RH |
| 25 | 110-3951 | 1 | Spring-Torsion, RH |
| 26 | 105-5740 | 1 | Hook-Lift |
| 27 | 108-8642 | 1 | Grass Basket ASM |
| 27:2 | 104-2607 | 1 | Strip-Basket |
| 27:3 | 3269-5 | 8 | Rivet-Pop |

● Not serviced separately

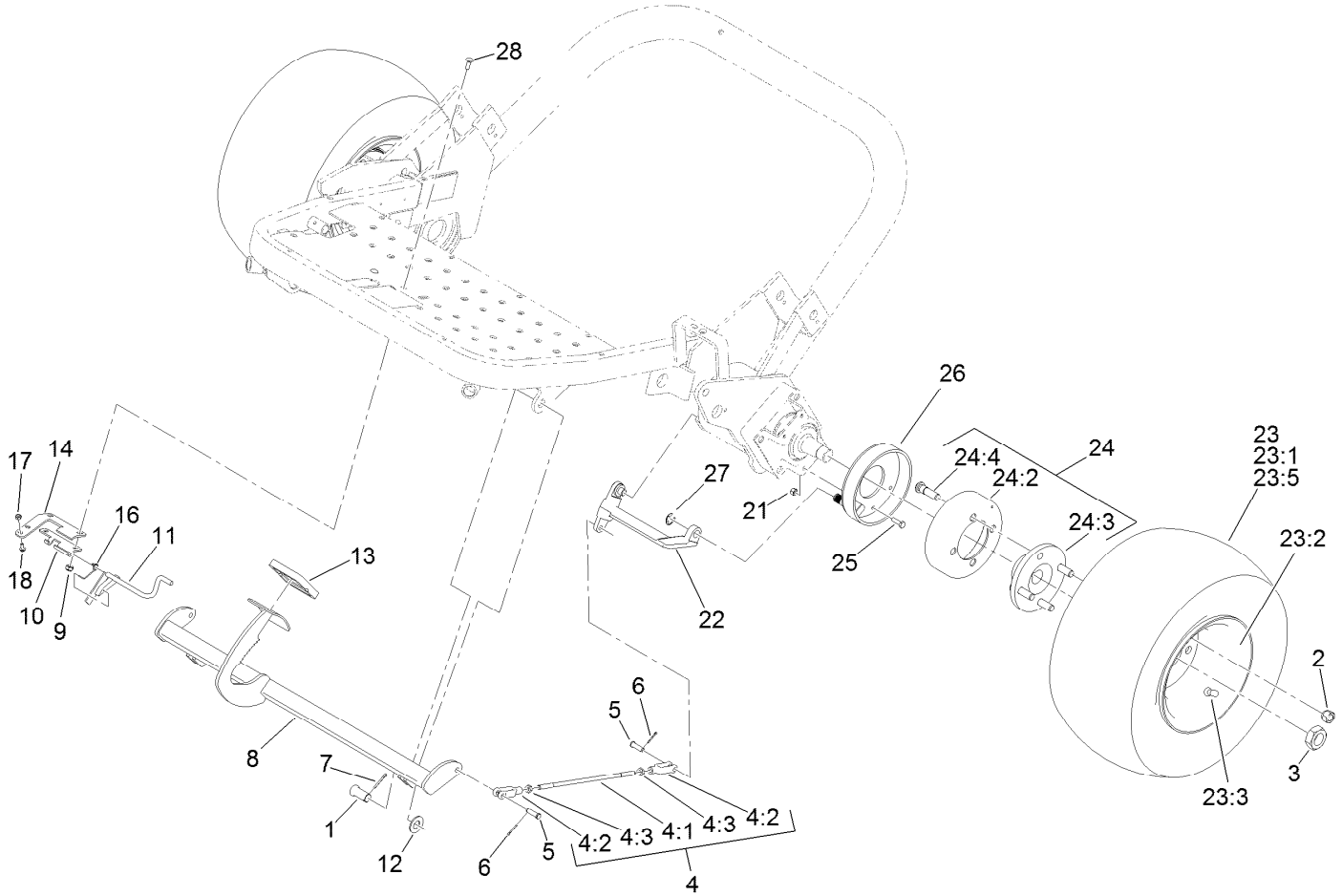


# Front Wheel and Brake Assembly

| Ref. | Part Number | Qty. | Description |
|---|---|---|---|
| 1 | 283-87 | 2 | Pin-Clevis |
| 2 | 242-50 | 8 | Nut-Lug |
| 3 | 26-3790 | 2 | Nut-Lock |
| 4 | 130-0110 | 2 | Brake Rod ASM |
| 4:1 | 27-2270 | 1 | Rod-Adjustment, Brake |
| 4:2 | 1-303105 | 2 | Yoke-Adjustable |
| 4:3 | 3220-2 | 2 | Nut-Jam |
| 5 | 283-61 | 4 | Pin-Yoke |
| 6 | 3272-6 | 4 | Pin-Cotter |
| 7 | 3272-11 | 2 | Pin-Cotter |
| 8 | 127-2208-01 | 1 | Pedal-Brake |
| 9 | 3296-16 | 2 | Nut-Lock, NI |
| 10 | 131-2078 | 1 | Sheet-Hinge, Sensor |
| 11 | 131-2081 | 1 | Latch |
| 12 | 3256-27 | 2 | Washer-Flat |
| 13 | 93-7629 | 1 | Pad-Foot, Brake |
| 14 | 131-2077 | 1 | Sheet-Hinge |
| 16 | 132-6988 | 1 | Spring-Brake Latch |

| Ref. | Part Number | Qty. | Description |
|---|---|---|---|
| 17 | 3296-2 | 2 | Nut-Lock, NI |
| 18 | 3290-321 | 2 | Screw-HWH |
| 21 | 3296-42 | 8 | Nut-Lock, NI |
| 22 | 93-2096 | 2 | Lever-Brake |
| 23 | 10-6790 | 2 | Wheel And Tire ASM |
| 23:1 | 28-3680 | 1 | Tire |
| 23:2 | 217-60 | 1 | Rim |
| 23:3 | 232-27 | 1 | Stem-Valve |
| 23:5 | 232-37 | 1 | Tube |
| 24 | 10-6821 | 2 | Brake Drum ASM |
| 24:2 | 10-6850 | 1 | Drum-Brake |
| 24:3 | 10-6870-0P | 1 | Hub-Wheel |
| 24:4 | 85-6540 | 4 | Stud-Drive |
| 25 | 321-5 | 8 | Screw-HH |
| 26 | 104-7705 | 2 | Brake ASM |
| 27 | 104-7706 | 2 | E-Ring, Bowed |
| 28 | 3229-1 | 2 | Screw-CARR |

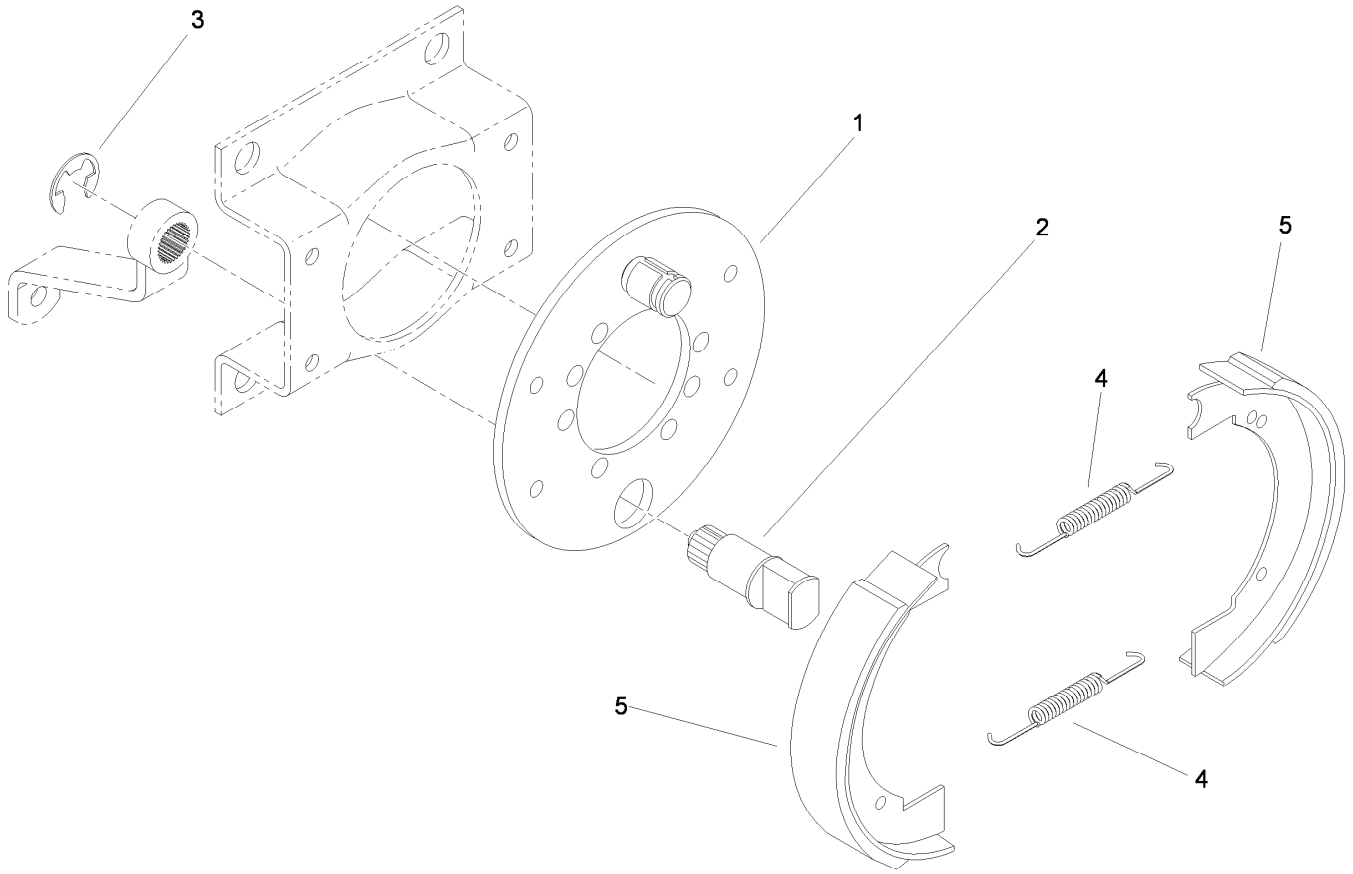


# Brake Assembly No. 104-7705

| *Ref.* | *Part Number* | *Qty.* | *Description* |
|---|---|---|---|
| 1 | 70-9870 | 1 | Plate-Backing |
| 2 | 104-7707 | 1 | Shaft-Cam, Brake |
| 3 | 104-7706 | 1 | E-Ring, Bowed |
| 4 | 70-9880 | 2 | Spring-Return |
| 5 | 70-9840 | 2 | Shoe-Brake |

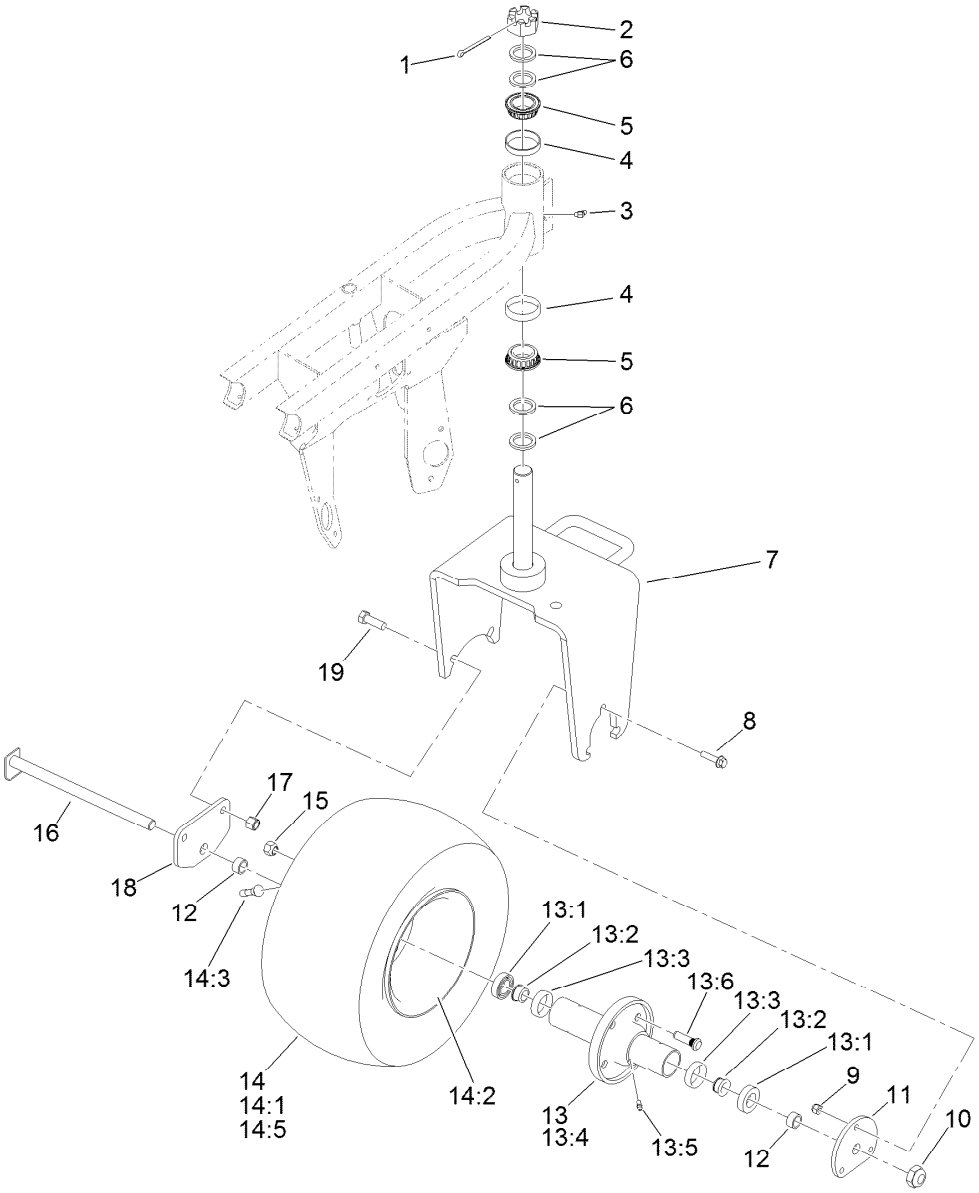


# Rear Wheel Assembly

| Ref. | Part Number | Qty. | Description |
|---|---|---|---|
| 1 | 3272-37 | 1 | Pin-Cotter |
| 2 | 32136-9 | 1 | Nut-Hex, Slotted |
| 3 | 302-11 | 1 | Fitting-Lube, 45 DEG |
| 4 | 115-9471 | 2 | Bearing-Cup |
| 5 | 115-9472 | 2 | Bearing-Cone And Seal |
| 6 | 18-6320 | 4 | Washer-Steering |
| 7 | 112-0285-01 | 1 | Fork-Castor |
| 8 | 114-4681 | 3 | Screw-HHF |
| 9 | 3296-39 | 3 | Nut-Lock, NI |
| 10 | 3296-67 | 1 | Nut-Lock, NI |
| 11 | 99-1486-01 | 1 | Plate-Adapter |
| 12 | 74-3730 | 2 | Spacer-Spindle, Rear |
| 13 | 72-9710 | 1 | Hub-Tire |
| 13:1 | 253-111 | 2 | Seal-Oil |
| 13:2 | 254-78 | 2 | Bearing-Cone |

| Ref. | Part Number | Qty. | Description |
|---|---|---|---|
| 13:3 | 254-79 | 2 | Bearing-Roller, Cup |
| 13:4 | 75-9440 | 1 | Hub ASM |
| 13:5 | 302-11 | 1 | Fitting-Lube, 45 DEG |
| 13:6 | 10-6830 | 4 | Stud-Type, Drive |
| 14 | 10-6790 | 1 | Wheel And Tire ASM |
| 14:1 | 28-3680 | 1 | Tire |
| 14:2 | 217-60 | 1 | Rim |
| 14:3 | 232-27 | 1 | Stem-Valve |
| 14:5 | 232-37 | 1 | Tube |
| 15 | 242-50 | 4 | Nut-Lug |
| 16 | 5-3934 | 1 | Bolt-Caster |
| 17 | 3296-23 | 2 | Nut-Lock, NI |
| 18 | 99-1485-01 | 1 | Plate-Adapter, Motor |
| 19 | 325-6 | 2 | Screw-HH |

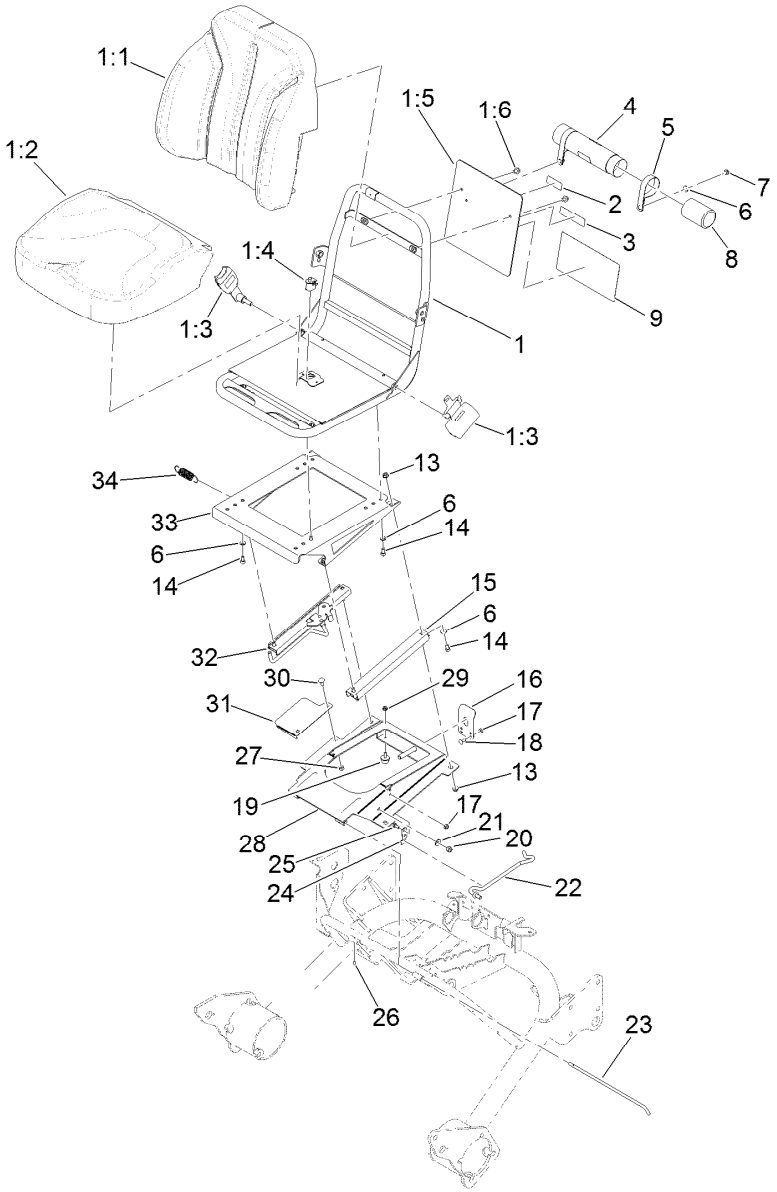


# Seat Assembly

| Ref. | Part Number | Qty. | Description |
|---|---|---|---|
| 1 | 139-2680 | 1 | Seat ASM |
| 1:1 | 139-2705 | 1 | Cover-Seat, Back |
| 1:2 | 139-2706 | 1 | Cover-Seat, Bottom |
| 1:3 | 139-2707 | 1 | Seat Belt Kit |
| 1:4 | 82-2190 | 1 | Switch-Bail |
| 1:5 | 139-2701 | 1 | Plate-Decal |
| 1:6 | 3234-30 | 2 | Screw-HHF |
| 2 | 93-6686 | 1 | Decal-Oil, HYD |
| 3 | 133-8062 | 1 | Decal-Arrestor, Spark |
| 4 | 104-7050 | 1 | Tube-Manual |
| 5 | 2412-133 | 2 | Clamp-R |
| 6 | 3256-23 | 10 | Washer-Plain |
| 7 | 32104-82 | 2 | Screw-HHF |
| 8 | 104-7048 | 1 | Cap-Housing |
| 9 | 139-2725 | 1 | Decal-Service |
| 13 | 32128-25 | 8 | Nut-HF |
| 14 | 3274-12 | 8 | Screw-HSH |
| 15 | 51-0780 | 1 | Slider-Seat |
| 16 | 66-2630 | 1 | Latch-Seat |
| 17 | 3296-16 | 4 | Nut-Lock, NI |
| 18 | 3229-1 | 2 | Screw-CARR |
| 19 | 1-523420 | 2 | Bumper |
| 20 | 3296-39 | 1 | Nut-Lock, NI |
| 21 | 3256-24 | 1 | Washer-Flat |
| 22 | 106-4643 | 1 | Rod-Prop, Seat |
| 23 | 105-0483 | 1 | Rod-Pivot, Seat |
| 24 | 68-5310 | 1 | Clip-Rod, Prop |
| 25 | 321-3 | 2 | Screw-HH |
| 26 | 32121-7 | 1 | Pin-Roll, Slotted |
| 27 | 3296-29 | 2 | Nut-Lock, NI |
| 28 | 105-0464-03 | 1 | Plate-Seat |
| 29 | 32128-33 | 2 | Nut-HF |
| 30 | 3230-1 | 2 | Bolt-CARR |
| 31 | 105-8284-03 | 1 | Shield-Valve |
| 32 | 105-8265 | 1 | Adjuster-Seat |
| 33 | 105-0466-03 | 1 | Plate-Seat, Upper |
| 34 | 88-6330 | 1 | Spring-Extension |

# Attachments and Accessories

## For 04358 Greensmaster 3150 2-Wheel Drive Traction Unit

| Product Name | Model/Part |
|---|---|
| Turf Evaluator | 04399 |
| CE Guard Kit | 04440 |
| Three-Wheel Drive Kit without ROPS | 04476 |
| Dethatching Unit | 04479 |
| Light Kit | 04554 |
| 8-Blade DPA Reel Mower | 04652 |
| 11-Blade DPA Reel Mower | 04654 |
| 14-Blade DPA Reel Mower | 04656 |
| Weight Kit, Greensmaster and Sand Pro/Infield Pro Traction Unit | 100-6442 |
| Spark Arrestor Screen | 104-6540 |
| Filter-Oil, Engine | 107-7817 |
| Premium Engine Oil SAE 30 (Drum) | 108-1196 |
| Premium Engine Oil SAE 30 (Pail) | 108-1197 |
| Wireless Hourmeter | 115-4754 |
| Premium Synthetic Bio-Degradable Hydraulic Fluid (5 Gallon Pail) | 119-2157 |
| Premium Synthetic Bio-Degradable Hydraulic Fluid (55 Gallon Drum) | 119-2158 |
| Tire-Traction | 119-3516 |
| Oil Cooler Kit | 130-6536 |
| Hi-Back Seat Cover | 133-1308 |
| PX Hydraulic Fluid (5 Gal) | 133-8086 |
| PX Hydraulic Fluid (55 Gal) | 133-8087 |
| Bag Kit | 137-8130 |
| Groomer Pull Link Kit, Serial Number 401500000 and After Greensmaster 3120 or Greensmaster 3150 Traction Unit | 138-4976 |
| Bimini Shade Kit | 138-8579 |
| MVP Kit-HYD Hose | 140-5236 |
| MVP Kit-1000 Hour | 44955 |
| Cartridge-Cleaner, Air | 92-0527 |
| Element-Filter | 92-0530 |
| Filter-Fuel | 94-2690 |
| Height-of-Cut Bar | 94-9010 |
| Weight Kit, Greensmaster 3100, 3150 or 3250-D Traction Unit with Three-Wheel Drive | 99-1645 |

TORO®

Count on it.